Case David Brown 1120, 1210, 1212
Tractors Technical Workshop Manual



Money Back Guarantee

Download **Today** (By Email) & Get CD in the Mail

Wait 15 Mins - Then Check Your -Email SPAM FOLDER- for Download

770 Thru 1412 Model Tractors

(Under 90 HP)

Volumes 1 & 2

Service Manual

9-37009

Reprinted

CASE IH

TABLE OF CONTENTS
770 THRU 1412 MODEL TRACTORS
(Under 90 HP Tractors)

DESCRIPTION	FORM NUMBER
SCHEDULE OF REPAIR TIMES	
Job Pricing Manual - 885 Thru 1412 Tractor	9-79875
Schedule of Repair Times - 780, 880, 990 & 1200 Tractors	9-38112
DIESEL ENGINE - 3 CYLINDER	
3-Cylinder Diesel Engines (770, 780, 880 and 885)	9-37101
GASOLINE ENGINE - 3 CYLINDER	
3-Cylinder Gasoline Engines (885, 3800 and 4600)	9-37111
DIESEL ENGINE - 4 CYLINDER	
4-Cylinder Diesel Engines - Series 449001 and 455001 (990, 995, 1200, 1210, 1410 and 1412)	9-37121
4-Cylinder Diesel Engine - Series AD4/47 (990 SN482001 thru 505286)	9-38114
Model 3LD Turbocharger	9-45941
Servicing the Model H1 Turbocharger	8-21340
Turbocharger Failure Analysis	9-78235
CLUTCHES	
Clutch	9-37131
TRANSMISSION	
Non-Synchromesh - Selectamatic Tractors (770, 780, 880, 990, 3800 and 4600)	9-38115
Synchromesh Gearbox (885, 990, 995 and 996)	9-37142
Non-Synchromesh 1200 and Synchromesh 1210	9-37151
Hydra-Shift Tractors	9-37161
Synchromesh Transmission 1210 and 1410 Tractors	9-37155
FRONT AXLE (4WD TRACTOR)	
Front Axle - 4WD Tractor MK1 (1200 and 1210)	9-37171
Front Axle - 4WD Tractor MK2 (1210)	9-37172
Front Axle - 4WD Tractor MK3 (Carraro)	9-37175
Front Axle - 4WD Tractor MK4 (Case)	9-37185
FRONT AXLE (2WD TRACTORS) AND STEERING	
Orbitrol (Danfoss) Steering Unit	9-78725
Front Axle and Steering	9-37191
Front Axle and Steering	9-37194
HYDRAULIC SYSTEM	
Selectamatic Hydrulic System	9-37211
Front Mounted Pump (1200, 1210, 1212, 1410 and 1412)	9-37241
Rear Mounted Pump (885, 990, 995 and 996)	9-37214
ELECTRICAL SYSTEM	
Electrical Equipment	9-37222
MISCELLANEOUS	
Service Information (1410, 1412 Tractors)	9-38124
POWER TAKE-OFF	
Power Take-Off (1410, 1412 Tractors)	9-37181

Schedule of Repair Times

CASE

JOB PRICING MANUAL

MODELS 885 THRU 1412 TRACTORS

NOTICE

Please read "Introduction" thoroughly and completely before attempting to use the time schedules listed.

Familiarity with the Manual will indicate the need to add certain operations together to obtain "Service Hours".

CASE CORPORATION

Rac 9-79875

PRINTED IN U S A

INDEX

Page

INTRODUCTION III

HOW TO USE YOUR JOB PRICING MANUAL IV

COMPUTING SERVICE PRICE V

RATE CHART FOR COMPUTING TOTAL SERVICE CHARGE ..... VI, VII

REQUEST FOR MANUAL CHANGE ..... VIII, IX

SERVICE DESCRIPTION AND HOURS 1-17

Section	Location	
A	Engine: tune up and replacement	1
B	Engine: cylinder head	1
C	Engine: cylinder block, crankshaft, bearings, pistons and sleeves	1
D	Engine: fuel system and diesel injection equipment	2
E	Engine: lubrication	3
F	Engine: manifold, exhaust system and air cleaner	4
G	Engine: timing gears, cover and throttle controls	4
H	Engine: cooling system	5
J	Flywheel and clutch	6
K	Transmission systems and reductions	6
Ak	Hydra Shift Transmission	7
L	Front axle and steering	8
M	Brakes, brake mechanism, foot plates and foot throttle	9
N	Hydraulic system and linkage	9
O	Electrical equipment	12
P	Instruments and instrument panel	14
R	Main frame and covers	15
S	Hood, fenders and seat	15
T	PTO unit and belt pulley	15
U	Transmission Oil Cooler	16
V	Power Steering	16
X	Front wheel drive unit (4WD)	17

J I CASE COMPANY - JOB PRICING MANUAL

INTRODUCTION

The contents of this Job Pricing Manual applies to the 885 through 1412 Series Case Tractors.

PURPOSE

The Job Pricing Manual is being introduced to assist J I Case Company Dealers in giving accurate, consistent repair pricing to their customers. It can also serve as a guide in estimating reconditioning cost of trade-in machines prior to or after trade has been accomplished.

DESCRIPTION

All times listed in this manual are for labor only, unless otherwise noted and apply to a complete tractor on the dealers shop floor without any attachments (ie. special shields, or owner applied extras).

A rate chart on the following pages offer a convenient method of converting "Service Hours" to total service charge.

USE OF MANUAL

This manual information is set up in two (2) basic columns. One column is headed "Service Description" and outlines the work to be performed. The other "Service Hours", broken down by specific model tractor, indicates the time required to perform a given job.

ABBREVIATIONS

R & R - Remove and replace
D & A - Dismantle and assemble
LH - Left-hand
RH - Right-hand
h - Hours
Min - Minute
IPTO - Independent Power Take-off

HOW TO USE YOUR JOB PRICING MANUAL

The operations are in two categories. Major (complete) and
Minor (subsidiary)

A major operation is one that is complete in itself and is shown by a capital letter, followed by a number, thus the section and operation are clearly identified (e.g. C.2 - One connecting rod and piston: R & R.

A Minor operation is one that is additional to the corresponding Major operation and is shown by a capital letter with a number and is followed by a small letter (e.g. C.2a - Extra for removing and replacing each additional connecting rod and piston, or C.2b - Extra for fitting new rings on one piston).

The time for a Minor operation should be added to that of a Major operation to find the time for the complete job.

In some instances it may be necessary to add more than one Minor operation to find the time for a complete job.

Example: To fit new piston rings to all 3 pistons.

	h
Major Operation C2 (one connecting rod)	5.4
Minor Operation C2a (x2 for 2 additional conn rods)	.6
Minor Operation C2b (x3 for the 3 sets of rings)	.9
TOTAL TIME:	6.9

In some instances where two or more Major operations are being carried out, it may be necessary to deduct time from the combined total to find the true time for the whole job.

Note: The time for the cylinder head removal and replacement is deducted as it is included in both Major operations B.3 and C.2.

Example: To decarbonize and grind in valves and fitting new piston rings to a 3 cylinder tractor.

	h
Major Operation B3	6.7
Major Operation C2 (one connecting rod)	5.4
Minor Operation C2a (x2 for 2 additional conn rods)	.6
Minor Operation C2b (x3 for the 3 sets of rings)	.9
	13.6
Less Major Operation B2	4.0
TOTAL TIME:	9.6

COMPUTING SERVICE PRICE -- WHEN HOURS ARE KNOWN, AT ANY LISTED HOURLY RATE FROM $5.00 TO $17.50 PER HOUR

EXAMPLE #1:

MAN HOURS -- .4 @ $6.50 RATE

.4 HOURS = $ 2.60

SERVICE PRICE = $ 2.60

EXAMPLE #2:

MAN HOURS -- 5.2 @ $6.50 RATE

5.2 HOURS = 5.0 HOURS = $ 32.50
.2 HOURS = 1.30

SERVICE PRICE = $ 33.80

EXAMPLE #3:

MAN HOURS -- 57.3 @ $6.50 RATE

57.3 HOURS = 50.0 HOURS = $325.00
7.0 HOURS = 45.50
.3 HOURS = 1.95

SERVICE PRICE = $372.45

EXAMPLE #4:

MAN HOURS -- 124.6 @ $6.50 RATE

124.6 HOURS = 100.0 HOURS = $650.00
20.0 HOURS = 130.00
4.0 HOURS = 26.00
.6 HOURS = 3.90

SERVICE PRICE = $809.90

RATE CHART FOR COMPUTING TOTAL SERVICE CHARGE

MAN HOURS	RATE PER HOUR												
	5.00	5.50	6.00	6.50	7.00	7.50	8.00	8.50	9.00	9.50	10.00	10.50	11.00
0.1	.50	.55	.60	.65	.70	.75	.80	.85	.90	.95	1.00	1.05	1.10
0.2	1.00	1.10	1.20	1.30	1.40	1.50	1.60	1.70	1.80	1.90	2.00	2.10	2.20
0.3	1.50	1.65	1.80	1.95	2.10	2.25	2.40	2.55	2.70	2.85	3.00	3.15	3.30
0.4	2.00	2.20	2.40	2.60	2.80	3.00	3.20	3.40	3.60	3.80	4.00	4.20	4.40
0.5	2.50	2.75	3.00	3.25	3.50	3.75	4.00	4.25	4.50	4.75	5.00	5.25	5.50
0.6	3.00	3.30	3.60	3.90	4.20	4.50	4.80	5.10	5.40	5.70	6.00	6.30	6.60
0.7	3.50	3.85	4.20	4.55	4.90	5.25	5.60	5.95	6.30	6.65	7.00	7.35	7.70
0.8	4.00	4.40	4.80	5.20	5.60	6.00	6.40	6.80	7.20	7.60	8.00	8.40	8.80
0.9	4.50	4.95	5.40	5.85	6.30	6.75	7.20	7.65	8.10	8.55	9.00	9.45	9.90
1.0	5.00	5.50	6.00	6.50	7.00	7.50	8.00	8.50	9.00	9.50	10.00	10.50	11.00
2.0	10.00	11.00	12.00	13.00	14.00	15.00	16.00	17.00	18.00	19.00	20.00	21.00	22.00
3.0	15.00	16.50	18.00	19.50	21.00	22.50	24.00	25.50	27.00	28.50	30.00	31.50	33.00
4.0	20.00	22.00	24.00	26.00	28.00	30.00	32.00	34.00	36.00	38.00	40.00	42.00	44.00
5.0	25.00	27.50	30.00	32.50	35.00	37.50	40.00	42.50	45.00	47.50	50.00	52.50	55.00
6.0	30.00	33.00	36.00	39.00	42.00	45.00	48.00	51.00	54.00	57.00	60.00	63.00	66.00
7.0	35.00	38.50	42.00	45.50	49.00	52.50	56.00	59.50	63.00	66.50	70.00	73.50	77.00
8.0	40.00	44.00	48.00	52.00	56.00	60.00	64.00	68.00	72.00	76.00	80.00	84.00	88.00
9.0	45.00	49.50	54.00	58.50	63.00	67.50	72.00	76.50	81.00	85.50	90.00	94.50	99.00
10.0	50.00	55.00	60.00	65.00	70.00	75.00	80.00	85.00	90.00	95.00	100.00	105.00	110.00
20.0	100.00	110.00	120.00	130.00	140.00	150.00	160.00	170.00	180.00	190.00	200.00	210.00	220.00
30.0	150.00	165.00	180.00	195.00	210.00	225.00	240.00	255.00	270.00	285.00	300.00	315.00	330.00
40.0	200.00	220.00	240.00	260.00	280.00	300.00	320.00	340.00	360.00	380.00	400.00	420.00	440.00
50.0	250.00	275.00	300.00	325.00	350.00	375.00	400.00	425.00	450.00	475.00	500.00	525.00	550.00
60.0	300.00	330.00	360.00	390.00	420.00	450.00	480.00	510.00	540.00	570.00	600.00	630.00	660.00
70.0	350.00	385.00	420.00	455.00	490.00	525.00	560.00	595.00	630.00	665.00	700.00	735.00	770.00
80.0	400.00	440.00	480.00	520.00	560.00	600.00	640.00	680.00	720.00	760.00	800.00	840.00	880.00
90.0	450.00	495.00	540.00	585.00	630.00	675.00	720.00	765.00	810.00	855.00	900.00	945.00	990.00
100.0	500.00	550.00	600.00	650.00	700 00	750.00	800.00	850.99	900.00	950.00	1000.00	1050.00	1100.00

RATE CHART FOR COMPUTING TOTAL SERVICE CHARGE

MAN HOURS	RATE PER HOUR												
	11.50	12.00	12.50	13.00	13 50	14.00	14.50	15.00	15.50	16.00	16.50	17.00	17.50
0.1	1.15	1.20	1.25	1.30	1.35	1.40	1.45	1.50	1.55	1.60	1.65	1.70	1.75
0.2	2.30	2.40	2.50	2.60	2.70	2.80	2.90	3.00	3.10	3.20	3.30	3.40	3.50
0.3	3.45	3.60	3.75	3.90	4.05	4.20	4.35	4.50	4.65	4.80	4.95	5.10	5.25
0.4	4.60	4.80	5.00	5.20	5.40	5 60	5.80	6.00	6.20	6.40	6.60	6.80	7.00
0.5	5.75	6.00	6.25	6 50	6 75	7.00	7.25	7.50	7.75	8 00	8.25	8.50	8.75
0.6	6.90	7.20	7.50	7.80	8 10	8.40	8.70	9.00	9.30	9.60	9.90	10.20	10.50
0.7	8.05	8.40	8.75	9.10	9.45	9 80	10 15	10.50	10.85	11 20	11.55	11.90	12.25
0.8	9.20	9.60	10.00	10.40	10 80	11.20	11.60	12.00	12.40	12.80	13.20	13.60	14.00
0.9	10.35	10.80	11.25	11.70	12.15	12 60	13 05	13.50	13.95	14.40	14.85	15.30	15.75
1.0	11.50	12.00	12.50	13.00	13.50	14.00	14.50	15.00	15 50	16.00	16.50	17.00	17.50
2.0	23.00	24.00	25 00	26.00	27.00	28 00	29.00	30.00	31.00	32 00	33.00	34.00	35 00
3.0	34.50	36.00	37.50	39.00	40.50	42.00	43 50	45.00	46.50	48.00	49.50	51.00	52.50
4.0	46.00	48.00	50.00	52 00	54.00	56.00	58.00	60.00	62.00	64.00	66.00	68.00	70.00
5.0	57.50	60.00	62.50	65.00	67.50	70.00	72.50	75.00	77.50	80.00	82.50	85.00	87.50
6.0	69.00	72 00	75.00	78.00	81.00	84 00	87.00	90.00	93 00	96.00	99.00	102.00	105.00
7.0	80.50	84.00	87.50	91.00	94.50	98.00	101.50	105.00	108.50	112.00	115.50	119.00	122.50
8.0	92.00	96.00	100.00	104.00	108 00	112 00	116.00	120.00	124.00	128.00	132.00	136.00	140.00
9 0	103.50	108.00	112.50	117.00	121.50	126.00	130.50	135.00	139.50	144.00	148.50	153.00	157.50
10.0	115.00	120.00	125.00	130.00	135.00	140.00	145.00	150.00	155.00	160.00	165.00	170.00	175.00
20.0	230.00	240.00	250.00	260.00	270.00	280.00	290.00	300.00	310.00	320.00	330.00	340.00	350.00
30.0	345.00	360.00	375.00	390.00	405.00	420.00	435.00	450.00	465.00	480.00	495.00	510.00	525.00
40.0	460.00	480.00	500.00	520.00	540.00	560.00	580.00	600.00	620.00	640.00	660.00	680.00	700.00
50.0	575.00	600.00	625.00	650.00	675.00	700.00	725.00	750.00	775.00	800 00	825.00	850.00	875.00
60.0	690.00	720.00	750.00	780.00	810.00	840.00	870.00	900.00	930.00	960.00	990.00	1020.00	1050.00
70.0	805.00	840.00	875.00	910.00	945.00	980.00	1015.00	1050.00	1085.00	1120.00	1155.50	1190.00	1225.00
80.0	920.00	960.00	1000.00	1040.00	1080.00	1120 00	1160 00	1200.00	1240.00	1280.00	1320.00	1360.00	1400.00
90.0	1035.00	1080.00	1125 00	1170.00	1215.00	1260.00	1305.00	1350.00	1395.00	1440.00	1485.00	1530.00	1575.00
100.0	1150.00	1200.00	1250.00	1300.00	1350.00	1400.00	1450.00	1500.00	1550 00	1600.00	1650.00	1700.00	1750.00

BetterManuals.net

REQUEST FOR MANUAL CHANGE

Much time and effort has been expended in the preparation of this Job Pricing Manual, and we believe the contents to be acceptable for the average dealer shop conditions. Extensive use of the manual, however, may present a time allotment you feel is excessive or inadequate, or perhaps a particular job experienced repeatedly in the shop is not included in the "Service Descriptions".

In the interest of correcting any such possible oversights or errors, we ask that you notify us of the problem by using one of the forms provided. Fill the forms provided. Fill the form out completely with "Service Description" number, time allowed, actual time required, procedure used, and the number of times the job has been accomplished. If you are requesting the additions of another "Service Description" and time, include the procedure normally used, average time required, and the number of times the job has been accomplished.

For prompt handling, mail your "Change Request" to the attention of your Branch Service Manager.

REQUEST FOR: ( ) TIME CHANGE ( ) ADDITIONAL SERVICE DESCRIPTION

DEALERSHIP
CITY & STATE
DATE

SERVICE DESCRIPTION NO.
MAIN DESCRIPTION
ALLOWED TIME
ACTUAL TIME
TIMES PERFORMED
TRACTOR MODEL

PROCEDURE FOLLOWED:

_____

_____

_____

_____

_____

_____

_____
SIGNATURE OF SERVICEMAN

BetterManuals.net

REQUEST FOR: ( ) TIME CHANGE ( ) ADDITIONAL SERVICE DESCRIPTION

DEALERSHIP
CITY & STATE
DATE

SERVICE DESCRIPTION NO.
MAIN DESCRIPTION
ALLOWED TIME ACTUAL TIME
TIMES PERFORMED

PROCEDURE FOLLOWED:

_____

_____

_____

_____

_____

_____
SIGNATURE OF SERVICEMAN

REQUEST FOR: ( ) TIME CHANGE ( ) ADDITIONAL SERVICE DESCRIPTION

DEALERSHIP
CITY & STATE
DATE

SERVICE DESCRIPTION NO.
MAIN DESCRIPTION
ALLOWED TIME ACTUAL TIME
TIMES PERFORMED

PROCEDURE FOLLOWED:

_____

_____

_____

_____

_____

_____
SIGNATURE OF SERVICEMAN

BetterManuals.net

	SERVICE DESCRIPTION	SERVICE HOURS			
		885,	990,5	1210,12	1410,12
A.	ENGINE: TUNE UP AND REPLACEMENT				
A1	Engine tune up: includes check and setting injectors, adjusting valve clearance, clean crankcase breather, clean lift pump fuel sediment bowl, clean air cleaner and renew oil, fit new filter elements and vent fuel system.	2.5	3.2	---	---
	12/1400 series models - in addition, drain and refill injection pump with new engine oil.	---	---	3.3	3.5
A1	Engine tune up: Gas engines: includes clean and and set sparking plugs, contact breaker points, adjust carburetor/governor controls, check ignition timing etc.	3.7	---	---	---
A2	Engine unit: R & R by splitting tractor at flywheel.	11.3	9.0	11.0	11.0
A2a	Engine unit overhaul: includes replacing and/or examining crankshaft and bearings, fitting new pistons and sleeves (if fitted) and/or decarbonizing cylinder head.	'20.4	22.2	22.2	23.0
B.	ENGINE: CYLINDER HEAD				
B1	Adjust valve clearances (1210/1212 model - hydraulic pump drive connected).	.7	.5	1.3	1.3
B1a	Push rod/valve tappet: R & R (cylinder head in position.	.3	.3	.3	.3
B2	Cylinder head assembly: R & R, or fit replacement cylinder head gasket.	4.0	4.4	4.4	5.0
B3	Cylinder head: remove, decarbonize, grind in valves and refit.	6.7	7.1	7.1	7.4
B3a	Valves: Grind and reseat	.5	.7	.7	.7
B3b	Valve seats: Grind and reseat	.4	.7	.7	.7
B3c	Valve guides: ream oversize	.8	.8	.8	.8
B3d	Valve rocker (s): rebush and ream to size (per set).	.8	1.5	1.5	1.5
C	ENGINE: CYLINDER BLOCK, CRANKSHAFT; BEARINGS; PISTONS AND SLEEVES (IF FITTED)				
C1	Cylinder block: replacement.	18.9	17.9	25.2	25.7
C2	One connecting rod and piston: R & R.	5.4	5.8	5.8	6.0
C2a	Extra for removing and replacing each additional connecting rod and piston.	.3	.3	.3	.3

BetterManuals.net

	SERVICE DESCRIPTION	SERVICE HOURS			
		885,	990,5	1210,12	1410,12
C2b	Extra for fitting new rings (one piston).	.3	.3	.3	.3
C2c	Extra for removing and replacing one piston from one connecting rod.	.3	.3	.3	.3
C2d	Extra for rebushing one connecting rod and reaming to size.	.3	.3	.3	.3
C3	Short block - R & R.	---	14.5	14.5	14.5
C4	Camshaft R & R (engine in tractor frame).	9.5	5.3	6.5	6.5
C4a	Camshaft gear: R & R.	.3	.3	.3	.3
C5	Crankshaft and bearings: R & R.	13.6	11.3	15.2	15.2
C5a	Crankshaft weights: R & R (to be removed for grinding purposes) (3 cylinder only).	.5	---	---	---
C6	Engine speed indicator drive assembly and/or 'O' ring: R & R.	.3	.3	.3	.3
C6a	Engine speed indicator drive gear: R & R.	.3	.3	.3	.3
C7	Cylinder block: rebore (does not include time for dismantling engine).	2.0	2.7	2.7	2.7
D.	ENGINE: FUEL SYSTEM AND DIESEL INJECTION EQUIPMENT				
D1	Injectors: R & R (per set).	.6	.7	.7	.7
D1a	Injectors: check and set to correct pressure (per set).	.5	.6	.6	.6
D1b	Injectors: dismantle, clean, check, assemble and reset pressures (per set).	2.0	2.6	2.6	2.6
D2	AC lift pump: R & R (includes operation D4).	.5	.5	.5	.5
D2a	AC lift pump: D & A.	.3	.3	.3	.3
D3	Fuel filter elements: R & R and clean fuel sediment bowl (includes operation D4).	.7	.7	.7	.7
D4	Fuel system: air vent	.3	.3	.3	.3
D5	Fuel injector pipe: R & R.	.5	.7	.7	.7
D6	Fuel injector pipes: R & R complete set.	.3	.7	.7	.7
D7	Spill timing: check and adjust (includes operation D4).	.5	.5	1.5	1.5
D8	Fuel injection pump with direct drive gear train and access cover. R & R.	3.0	3.6	5.8	5.8

BetterManuals.net

	SERVICE DESCRIPTION	SERVICE HOURS			
		885,	990,5	1210,12	1410,12
D9	Fuel tank: R & R (tank drained includes operation P2 and gauge float unit D4).	1.8	2.0	2.3	2.3
D10	Fuel pipe, tank to AC lift pump (includes D4).	.4	.4	.4	.4
D11	Fuel filter assembly and/or fuel filter elements: R & R (includes operations D4 & S1).	.6	.6	.6	.6
D12	Fuel feed pipe filter to fuel injection pump: R & R (includes operations D4 and S1). (1212-1210 includes D11).	.7	.7	1.0	1.0
D13	Fuel feed pipe, AC lift pump to filter: R & R (includes operations D4 and S1).	.5	.5	1.2	1.2
D14	Fuel return pipe, DPA pump and filter to leak-off pipe connection: R & R (includes operation S1).	.5	.5	.3	.3
D15	Fuel tap assembly: R & R (tank drained).	.8	---	---	---
D15a	Fuel tap assembly: D & A	.3	---	---	---
D16	Injector leak-off pipe: R & R (includes operation S1).	.3	.5	.5	.5
D17	Fuel pipe, tank to tap (tank drained): R & R.	.3	---	---	---
D19	Fuel return pipe, filter assembly to leak-off pipe connections: R & R.	---	.2	.1	.1
D20	Injector pump drain pipe: R & R.	---	---	.1	.1
E.	ENGINE: LUBRICATION				
E1	Oil filter element: R & R (excludes operation S1).	.3	.3	.3	.3
E2	Engine oil change.	.3	.3	.3	.3
E2a	Oil pump gauze: R & R (includes removal of sump).	1.2	1.2	1.2	1.2
E2b	Oil relief valve assembly: R & R (includes lapping in of valve).	.6	.6	.6	.6
E2c	Oil pump feed pipe: R & R.	.3	.3	.3	.3
E3	Oil pump: R & R.	1.7	1.0	1.0	1.0
E3a	Oil pump: D & A.	1.0	1.0	1.0	1.0
E4	Oil warning switch: R & R.	.1	.1	.1	.1
E5	Cylinder block to cylinder head oil feed pipe: R & R.	.3	1.0	1.0	1.0

BetterManuals.net

	SERVICE DESCRIPTION	SERVICE HOURS			
		885,	990,5	1210,12	1410,12
F.	ENGINE: MANIFOLD, EXHAUST SYSTEM, AND CLEANER AND CARBURETOR				
F1	Muffler: R & R	.1	.1	.1	.1
F2	Air cleaner and bracket: R & R	.6	.4	1.3	.8
F2a	Battery support tray: R & R.	---	---	.2	.2
F3	Air cleaner: Drain, clean and refill with fresh oil.	1.0	1.0	1.3	---
F3a	Air cleaner: Clean and replace element.	---	---	---	.5
F4	Inlet manifold: R & R (fuel injection pump in place on 3 cylinder engine: includes operation S1).	.7	.5	1.0	1.0
F4a	Inlet manifold gas: R & R.	3.7	---	---	---
F4b	Inlet manifold cover plate: R & R	.6	---	---	---
F4c	Inlet manifold drain: R & R, gas.	.1	---	---	---
F5	Air intake hose, radiator or turbo to inlet manifold: R & R (includes operation S1).	.4	.4	.5	.5
F5a	Carburetor: R & R.	2.2	---	---	---
F5b	Carburetor: D & A.	1.4	---	---	---
F7	Air intake hose, air cleaner to turbo or radiator: R & R (includes operation S1).	.3	.4	.5	.5
F7a	Air intake elbow (includes carburetor seal): R & R.	.4	---	---	---
F8	Exhaust manifold: R & R (includes operation S1).	.5	.8	1.4	1.8
F8a	Exhaust manifold drain: R & R.	.1	.1	.1	---
F8b	Exhaust manifold: R & R (gas engines includes heat shield).	.9	---	---	---
F9	Turbocharger: R & R.	---	---	---	1.0
F9a	Turbo supply line.	---	---	---	.5
F9b	Turbo return line.	---	---	---	.5
F10	D and A Turbocharger	---	---	---	1.0
G.	ENGINE: TIMING GEARS, COVER AND THROTTLE CONTROLS				
G1	Timing gear cover: R & R (includes removal of radiator).	3.5	3.9	3.9	3.9
G1a	Timing gear cover oil seal: R & R.	1	.2	.2	.2

Better Manuals.net

	SERVICE DESCRIPTION	SERVICE HOURS			
		885,	990,5	1210,12	1410,12
G2	Crankcase pulley: R & R (Radiator in place). 1210-1212 (includes removal of radiator).	.8	.7	2.9	2.9
G3	Timing gears: R & R (includes removal of radiator).	4.0	5.2	5.4	5.4
G3a	Timing gear carrier plate: R & R.	.3	.3	.3	.3
G3b	Intermediate shaft: R & R.	---	.3	.3	.3
G4	Throttle linkage/and or cable: R & R.	2.4	1.0	1.0	1.0
G4a	Additional time for cross shaft includes fuel tank.	1.0	2.0	2.3	2.3
G5	Hand throttle control lever: R & R.	.3	.3	.3	.3
G6	Foot throttle pedal: R & R.	.3	.3	.3	.3
G7	Fuel cut off control: R & R.	.8	2.3	.3	.3
G8	Fuel injection pump drive gear housing assembly: R & R.	3.2	---	---	---
G8a	Fuel injection pump drive gear housing: D & A.	.7	---	---	---
G9	Governor assembly: R & R (top and bottom housings) (Gas model).	2.5	---	---	---
G9a	Governor assembly: D & A (includes wts, bushes, bearings and levers) (Gas model).	1.3	---	---	---
G10	Adjust governor/carburetor for maximum and minimum speeds. (Gas model)	1.0	---	---	---
H.	ENGINE: COOLING SYSTEM				
H1	Radiator: R & R.	1.5	1.5	1.7	1.7
H2	Radiator top hose: R & R.	.7	.7	.7	.7
H2a	Water outlet or thermostat: R & R.	.3	.3	.3	.3
H3	Radiator bottom hose: R & R.	.6	.6	.6	.6
H4	Cylinder block drain tap: R & R.	.3	.3	.3	.3
H5	Fan belt: R & R.	.4	.4	1.3	1.3
H6	Water pump: R & R and /or bypass hose, and/or 'O' ring seal.	1.6	1.6	2.3	2.3
H6a	Water pump: D & A.	1.0	1.0	1.0	1.0
H7	Fan blades: R & R.	1.9	1.9	2.3	2.3

BetterManuals.net

	SERVICE DESCRIPTION	SERVICE HOURS			
		885,	990,5	1210,12	1410,12
H8	Radiator: drain and refill.	.3	.3	.3	.3
J.	FLYWHEEL AND CLUTCH				
J1	Double clutch: R & R (includes operation J2) by splitting tractor at flywheel housing.	3.5	5.2	---	---
	IPTO* Clutch: R & R (by splitting tractor at flywheel housing 995)	---	6.5	7.6	7.6
	(Extra time for the four wheel drive 1210)	---	---	.9	---
J1a	Double clutch: D & A.	3.2	3.2	---	---
	IPTO* Clutch: D & A (995-1210-1212)	---	4.0	4.0	4.0
J1b	Flywheel: R & R.	.6	.6	.6	.6
J1c	Transmission clutch cross shaft: R & R (IPTO*clutch).	---	.8	.8	.8
J1d	Clutch cross shaft: R & R (IPTO*clutch).	---	.5	.5	.5
J1e	Clutch cross shaft: Livedrive	.5	.5	---	---
J2	Clutch pedal: adjust free play (double/single)	.3	.3	.2	.2
J2a	Extra for adjusting internal clearances.	.5	.5	---	---
J4	Clutch brake: mechanism includes gearbox cover: R & R.	4.7	5.0	---	---
J5	Clutch pedal: R & R.	.8	.8	1.5	1.5
J6	Hand clutch: Adjust free play.	---	.2	.2	.2
J7	Hand clutch: adjust latch pin lever.	---	.3	.3	.3
J8	Hand clutch lever: R & R.	---	1.1	1.1	1.1
J8a	Hand clutch lever: D & A.	---	.5	.5	.5
	*Note: IPTO Independent Power Take Off (Clutch)				
K.	TRANSMISSION SYSTEMS				
K1	Checking end float and condition of gears in gearbox includes removal of gearbox cover.	2.3	2.3	2.3	2.3
K1a	Additional time for splitting tractor at rear frame to rear axle joint for replacement of shafts, bearings and gears in gearbox, excluding bevel pinion shaft and differential.	6.8	6.8	6.8	6.8
OR		OR	OR	OR	OR
K1b	Additional time for removing complete gearbox to stand for overhaul, includes bevel pinion, crown wheel and differential, also removal of rear axle.	8.5	8.5	8.5	8.5

BetterManuals.net

	SERVICE DESCRIPTION	SERVICE HOURS			
		885,	990,5	1210,12	1410,12
K1c	Gearbox: D & A.	3.1	3.1	3.1	3.1
K1d	Additional time for 12-speed gearboxes.	.5	.5	.5	.5
K1e	Differential: D & A. (Includes adjusting wheel to pinion).	2.3	2.3	2.3	2.3
K2	Both selector gear levers: R & R.	.5	.5	.5	.5
K3	Rear Wheel: R & R.	.3	.3	.3	.3
K4	Reduction: R & R (includes operation K3)	1.5	1.5	1.8	2.0
K4a	Brake drum: R & R (1400 Hub and plates)	.6	.6	.6	.6
K4b	Reduction: D & A (includes operation K4a)	4.5	4.5	4.5	4.0
K4c	Rear axle casing oil seal: R & R (includes remove and refit brake shoe assembly).	.6	.6	.7	.7
K5	Final drive shaft and/or bearings and/or oil seals, inner and outer: R & R.	3.8	3.8	3.5	3.0
K6	Differential lock sleeve: R & R (includes operation K4 and K4c - excludes changing transmission oil: use service tool made to drawing page 3, Service Manual 9-37151.	3.0	3.0	3.3	3.0
K7	Differential lock pedal: R & R.	.3	.3	2.8	2.8
K8	Transmission oil (includes cleaning filter screen and/or cleaning magnetic filter).	1.0	1.0	1.2	1.2
AK.	HYDRA SHIFT TRANSMISSION				
Ak1	Gearbox Hydraulic pressures - check, Remove cover, adjust brake bands, change sequence or spool valve.	---	---	6.5	6.5
	Adjust bands without removing cover. Current production with plugs in gearbox covers.	---	---	1.0	1.0
Ak1a	Additional time for splitting tractor at rear axle to rear main frame joint for access to hydraulic and range sections of gearbox.	---	---	5.3	5.3
	NB For bevel pinion shaft, crown wheel and differential repairs it will be necessary to remove complete gearbox to a suitable stand.				
Ak1b	Adjust brake bands - early tractors only include removal of brake band cylinders.	---	---	.8	---
Ak1c	Support snout: R & R.	---	---	.2	.2
Ak1d	Front end plate or input shaft and/or seal: R & R.	---	---	.7	.7

BetterManuals.net

	SERVICE DESCRIPTION	SERVICE HOURS			
		885,	990,5	1210,12	1410,12
Ak1e	No. 1 brake band: R & R - carry out adjustment of brake band after replacing front end plate.	---	---	.2	.2
Ak1f	No. 1 reduction unit: R & R.	---	---	.2	.2
Ak1g	No. 1 reduction unit: R & R - gears.	---	---	.6	.6
Ak1h	No. 1 reduction unit: R & R - Piston and clutch plates, includes shimming buffer springs.	---	---	.8	.8
Ak2	Transmission hydraulic pump: R & R (after splitting at back axle).	---	---	.3	.3
Ak2a	Hydraulic pump: D & A.	---	---	.3	.3
Ak3	Pressure pipe - pump to spool: R & R.	---	---	.3	.3
Ak4	Hydraulic gearbox section (complete): R & R or Hydraulic gearbox spacer together with No. 2 reduction unit and brake band assembly: R & R.	---	---	.7	.7
Ak4a	No. 2 reduction unit and brake band: R & R.	---	---	1.2	1.2
Ak4b	No. 2 reduction unit: D & A - Planet gears.	---	---	.6	.6
Ak4c	No. 2 reduction unit: D & A - piston and clutch plates and/or input shaft includes shimming buffer springs.	---	---	1.0	1.0
Ak4d	Freewheel and support housing in range gear-box front end plate includes checking end float of top shaft.	---	---	.3	.3
Ak4e	Range gearbox: D & A replacing gears, includes selectors, top shaft and/or layshaft and bearings excluding bevel pinion shaft.	---	---	1.8	1.8
Ak5	Gearbox: R & R from tractor frame by removal of rear axle.	---	---	14.3	14.3
Ak5a	Gearbox: D & A.	---	---	8.5	8.5
Ak5b	Differential and crown wheel: D & A includes refitting to gearbox end plate.	---	---	2.3	2.5
L.	FRONT AXLE AND STEERING: MANUAL				
L1	Front wheel: R & R.	.3	.3	.3	.3
L1a	Front hub and/or bearings and/or oil seal and/or dirt excluder: R & R.	.6	.6	.6	.6
L1b	Stub axle and/or steering lever and/or bushes: R & R.	1.2	1.2	1.2	1.2
L2	Front hub: adjustment.	.3	.3	.3	.3

BetterManuals.net

	SERVICE DESCRIPTION	SERVICE HOURS			
		885,	990,5	1210,12	1410,12
L3	Front wheel: adjust and check alignment (toe-in).	.4	.4	.4	.4
L4	Front axle complete: R & R.	1.9	3.9	5.7	5.7
L4a	Front axle trunnion pin bushes: R & R.	.8	.8	.6	.6
L5	Ball socket assembly: R & R (includes operation L3).	.6	.6	.6	.6
L6	Steering box and column assembly: R & R (where fitted). Manual steering.	.9	---	---	---
L6a	Steering box and column assembly: D & A. fitting new drop, armshaft and bushes.	2.5	---	---	---
L7	Steering wheel: R & R.	.3	.3	.3	.3
L8	Track rods and spacer tube: R & R.	.8	.8	.8	---
L9	Side steering rod: R & R (where fitted).	.5	---	---	---
L10	Drop arm: R & R (where fitted).	.5	---	---	---
M.	BRAKES, BRAKE MECHANISM, FOOTPLATES AND THROTTLE PEDAL				
M1	Brakes: adjust and test.	.4	.4	.4	.4
M2	Brake shoes: R & R (one side only) (includes operation K8) (1410/12 plates).	1.8	1.8	2.2	2.2
M2a	Brake shoes: reline (one pair).	.6	.6	.8	---
M2b	Brake camshaft and bushes (one side).	.4	.4	.4	.4
M2c	Brake shoe adaptor plate: R & R.	---	---	.3	---
M3	Brake cross shaft: D & A (includes removal of footplates).	1.5	1.5	3.0	3.0
M3a	Additional time for hand clutch (where fitted).	---	.3	.3	.3
M3b	Brake cross shaft tube and 'O' rings: R & R (includes operation K12).	---	---	2.0	2.0
M4	Handbrake lever: R & R.	.5	.5	.5	.5
M5	Brake rod assembly: R & R.	.2	.2	.2	.2
M6	Foot throttle pedal: R & R.	.3	.3	.3	.3
N.	HYDRAULIC SYSTEM AND LINKAGE				
N1	Suction gauze: clean and replace with new filter element. (Includes K12)	1.0	1.0	1.2	1.2

BetterManuals.net

	SERVICE DESCRIPTION	SERVICE HOURS			
		885,	990,5	1210,12	1410,12
N1a	Suction cylinder housing: R & R.	---	---	.6	.6
N1b	Long suction pipe: R & R.	---	---	1.0	1.0
N2	Pressure relief valve and/or air bleed valve: (includes operation K12).	---	---	1.6	1.6
N2a	Pressure supply pipe - center connection to distributor block and/or combining valve: R & R.	---	---	.4	.4
N2b	Suction pipe elbow to pump and 'O' ring: R & R.	---	---	1.0	1.0
N3	Suction pipe bend and/or front suction hoses: R & R.	---	---	1.0	1.0
N4	Hydraulic pump: R & R (includes operation K12) (990/995/996 includes N1).	3.5	3.5	1.9	1.9
N4a	Hydraulic pump: D & A (single pump)	1.5	1.5	.8	.8
	(includes operation N4b) (tandem pump)	---	---	1.2	1.2
N4b	Hydraulic pump coupling or gear: R & R.	.3	.3	.3	.3
N4c	Hydraulic pump support plate: R & R.	.4	.4	.3	.3
N4d	Hydraulic pump relief valve.	.5	.5	---	---
N4e	Hydraulic pump suction pipe.	.3	.3	---	---
N5	Hydraulic pump drive shaft (front engine: R & R).	---	---	1.1	1.1
N6	Pressure supply pipe from pump to center connection: R & R.	---	---	2.3	2.3
N7	Pressure supply pipe distributor block or combining valve to ram cylinder connector or three-way valve: R & R.	---	---	1.3	1.3
N8	Ram cylinder connector or three-way valve: R & R.	.3	.3	.3	.3
N9	Combining valve: R & R (twin pumps).	---	---	.7	.7
N9a	Combining valve: D & A (twin pumps).	---	---	.3	.3
N10	Distributor block: R & R fitting new 'O' rings.	---	---	.5	.5
N11	Low pressure supply pipes: R & R.	---	---	15.0	15.0
	Low and high pressure supply pipes, R & R includes removal of rear axle.	12.5	12.5	---	---
N12	Check adjustment of hydraulic controls (excludes control valve assembly settings).	.6	.6	.6	.6
N13	Hydraulic control lever, quadrant and housing: R & R (excludes operation N12).	.7	.7	.7	.7

BetterManuals.net

	SERVICE DESCRIPTION	SERVICE HOURS			
		885,	990,5	1210,12	1410,12
N13a	Hydraulic control lever or quadrant: R & R (excludes operation N12).	.8	.8	.8	.8
N13b	Pressure pipe assembly - distributor block to Selectamatic control valve assembly: R & R (includes operations K8 and N11).	---	---	4.8	4.8
N14	Rate of lowering control valve assembly spindle: R & R (excludes operation N12).	.3	.3	.3	.3
N15	Rate of lowering control knob: R & R.	.3	.3	.3	.3
N16	Sensing unit: R & R.	1.0	1.0	1.0	1.0
N16a	Sensing unit: D & A — Fixed draft.	.4	.4	.5	---
	Variable draft.	---	---	.8	.8
N16b	Sensing unit cable anchorage: R & R.	.2	.2	.2	.2
N17	Sensing unit cable: R & R.	.8	.8	.8	.8
N18	Ramshaft: R & R complete with Selectamatic control valve assembly and ramshaft bracket.	2.9	2.9	2.9	2.9
N18a	Selectamatic control valve assembly: R & R from ramshaft bracket.	.5	.5	.5	.5
N18b	Selectamatic control valve assembly: D & A (excludes operation N17).	2.0	2.0	2.0	2.0
N18c	Hold relief valve, fit new assembly or adjust shims.	.3	.3	.3	.3
N18d	Right-hand ramshaft bracket: R & R.	.4	.4	.4	.4
N18e	Additional time for dismatling right hand ramshaft bracket.	.6	.6	.6	.6
N18f	Adjust control valve assembly.	.6	.6	.6	.6
N18g	Ramshaft connecting rod: R & R.	.3	.3	.3	.3
N18h	Ram cylinder piston: R & R, fitting new 'O' rings and anti-extrusion ring.	.8	.8	.8	.8
N18j	Ram cylinder: R & R, replacing sealing 'O' ring.	.3	.3	.3	.3
N19	Selector knob, selector panel and/or breather: R & R.	.3	.3	.3	.3
N20	Rear axle external services connector: R & R.	.3	.3	---	---
N21	Drawbar assembly: R & R.	.5	.5	.5	.5
N21a	Hitch bracket: R & R.	.3	.3	.3	.3

BetterManuals.net

	SERVICE DESCRIPTION	SERVICE HOURS			
		885,	990,5	1210,12	1410,12
N22	Ram cylinder cover and lift hatch: Remove, dismantle, reassemble and replace.	.6	.6	.6	---
N23	Check chain assembly: R & R, fitting new anchor bracket where necessary.	.4	.4	.5	.5
N23a	Check chain: R & R (one only).	.2	.2	.2	.2
N24	One lift rod: R & R.	.3	.3	.3	.3
N24a	Right-hand lift rod: D & A.	.6	.6	.6	.6
N25	Lower links: R & R.	.3	.3	.3	.3
N26	Top link: D & A.	.3	.3	.3	.3
N27	Hold and by-pass valves: R & R.	.6	.6	.6	---
	R & R with tandem pump	---	---	1.5	1.5
N29	Three-way valve: R & R.	.6	.6	.6	---
N29a	Three-way valve: D & A.	.5	.5	.5	---
N31	Quick release coupling: R & R.	.3	.4	.4	.4
N32	Remote valve: R & R. Single	.6	.6	.6	.6
	R & R Double	.8	.8	.8	.8
N33	One remote valve: D & A.	.6	.6	.6	.6
O.	ELECTRICAL EQUIPMENT				
O1	Battery: disconnect.	.1	.1	.1	.1
O1a	Battery: R & R.	.6	.6	.3	.3
O1b	Battery to ground cable: R & R.	.2	.2	.2	.2
O1c	Battery to starter cable: R & R.	.4	.7	.7	.7
O2	Cable, starter to ground: R & R.	.1	.1	.1	.1
O3	Generator or alternator: R & R.	.7	.7	.7	.7
O3a	Generator or alternator: D & A	1.3	1.3	1.3	1.3
O4	Fuel tank gauge unit: R & R, tank drained.	.3	.8	.8	.8
O5	Horn and horn bracket: R & R (where fitted).	.4	.4	.4	.4
O6	Horn to connector wire: R & R.	---	1.3	1.3	1.3

BetterManuals.net

	SERVICE DESCRIPTION	SERVICE HOURS			
		885,	990,5	1210,12	1410,12
O8	Starter: R & R.	.5	.5	.7	.7
O8a	Extra time for power steering.	1.0	---	---	---
O8b	Starter: D & A.	1.5	1.5	1.3	1.3
O9	Starter safety switch: R & R.	.3	.3	.3	.3
O1O	Lead - starter safety switch: R & R.	1.0	1.0	1.0	1.0
O11	Engine guide tube and wiring: R & R.	1.2	1.2	1.2	1.2
O11a	Extra time for power steering	1.0	---	---	---
O12	One head lamp: R & R.	.4	.4	.3	.3
O13	Leads - head lamps: R & R.	.5	.5	1.2	1.2
O14	Lead - seat support to instrument panel.	.3	.3	.4	.4
O15	Seat support connector to left hand side/tail lamp wire connector: R & R.	.6	.6	.6	.6
O16	Lead-seat support connector to right hand side/ tail - rear floodlamp wire connectors: R & R.	.7	.7	.7	.7
O17	Trailer connectors and wires: R & R.	.3	.5	.5	.5
O19	Rear floodlamp: R & R.	.3	.3	.3	.3
O20	Lead-side light left hand: R & R.	.4	.4	.4	.4
O21	Lead-side light right hand: R & R.	.4	.4	.4	.4
O22	Lead-tail light left hand: R & R.	.4	.4	.4	.4
O23	Lead-tail light right hand: R & R.	.4	.4	.4	.4
O24	Side light: R & R.	.3	.3	.3	.3
O25	Tail light: R & R.	.4	.4	.4	.4
O26	Lead -rear number plate: R & R.	.3	.3	.3	.3
O27	Lead -fuel gauge to tank unit: R & R.	1.00	1.2	1.2	1.2
O28	Lead - rear flood light wire: R & R.	.3	.3	.3	.3
O29	Oil warning sender: R & R.	.2	.2	.2	.2
O30	Temperature gauge sender: R & R.	.4	.4	.4	.4
O30a	Temperature gauge to sender wire connector: R & R.	1.0	1.0	1.0	1.0
O31	Vacuum switch guard: R & R.	.3	.3	---	---
O31a	Vacuum switch: R & R.	.3	.3	.3	.3

BetterManuals.net

	SERVICE DESCRIPTION	SERVICE HOURS			
		885,	990,5	1210,12	1410,12
O31b	Vacuum switch adaptor: R & R.	1.0	1.0	---	---
O32	Lead assembly - vacuum switch: to connector 990/ 995/996 - connector to instrument panels: R & R.	1.0	1.0	1.0	1.0
O33	Wiring harness and connector to instrument panel: R & R.	1.2	1.2	1.2	1.2
O34	Wiring harness - instrument panel: R & R (incorporates fuse and warning lights).	1.2	1.8	1.8	1.8
	GAS 885G ONLY				
O36	Ignition coil remove and replace.	.5	---	---	---
O37	Lead - harness to ignition coil: R & R.	.3	---	---	---
O38	Lead - coil to contact breaker: R & R.	.3	---	---	---
O39	Lead - HT coil to distributor: R & R.	.7	---	---	---
O40	Lead - HT distributor to spark plugs: R & R.	.7	---	---	---
O41	Distributor: R & R.	.8	---	---	---
O41a	Distributor: D & A.	.8	---	---	---
O41b	Distributor clamp: R & R.	.1	---	---	---
O42	Contact brakers: R & R.	.8	---	---	---
O43	Spark plugs: R & R.	.3	---	---	---
O43a	Spark plugs clean, test and reset.	.3	---	---	---
P.	INSTRUMENTS AND INSTRUMENT PANEL				
P1	Fuel cut-off control: R & R.	.8	2.3	.3	.3
P2	Instrument panel c/w instruments: R & R.	1.0	1.3	1.3	1.3
P2a	Temperature gauge: R & R.	.2	.2	.2	.2
P2b	Isolation ignition and starter switch: R & R.	.2	.2	.2	.2
P2c	Light switch: R & R.	.2	.2	.2	.2
P2d	Fuel gauge: R & R (where fitted).	.2	.2	.2	.2
P2e	Warning lights: R & R.	.8	.8	.8	.8
P2f	Fuse holder: R & R (Where fitted).	.3	.3	.3	.3
P2g	Horn button. R & R.	.3	.3	.3	.3

BetterManuals.net

	SERVICE DESCRIPTION	SERVICE HOURS			
		885,	990,5	1210,12	1410,12
P2h	Engine speed indicator: R & R.	.5	.5	.5	.5
P2k	Regulator: R & R.	.3	.3	.3	.3
P21	Hazard warning switch: R & R.	.3	.3	.3	.3
P3	Choke control cable: R & R.	.7	---	---	---
R.	MAIN FRAME AND COVERS				
R1	Gearbox cover: R & R.	2.0	2.5	5.0	5.0
R2	Clutch cover: R & R.	3.9	3.3	5.5	5.5
R3	Engine sump: R & R.	.8	.8	.8	.8
R4	Front main frame: R & R by splitting tractor at clutch housing (includes frame spacer 995).	13.3	10.0	15.2	15.2
R5	Gearbox sump: R & R.	---	---	1.2	1.2
R5a	Gearbox sump filter housing: R & R.	1.0	1.0	.8	.8
R6	Rear axle case: R & R.	13.5	13.5	16.0	16.0
R7	Rear main frame: R & R - by splitting tractor at clutch housing. Extra time for 995	13.0 ---	13.0 2.0	18.0 ---	18.0 ---
R8	Rear axle gasket: R & R - by removing gearbox cover and splitting tractor at rear axle joint.	9.0	11.0	11.0	11.0
R9	Front frame extension: R & R.	---	4.6	5.7	5.7
R10	LH and RH foot plates: R & R.	1.6	1.6	3.3	3.3
R10a	Additional time for hand clutch mechanism. (IPTO)	---	1.5	1.5	1.5
S.	HOOD, FENDERS AND SEAT				
S1	Hood: R & R (excludes electrical operation).	.3	.3	.3	.3
S1a	Hood, front: R & R (excludes electrical operations).	---	---	.8	.8
S2	Seat and support bracket: R & R.	.3	.3	.3	.3
S2a	Seat support from support bracket: R & R.	.3	.3	.3	.3
S2b	Seat: D & A.	.8	.8	.8	.8
S3	Fender: R & R (excludes electrical operation).	.5	.5	.5	.5
S4	Fit new seat cover: R & R.	.3	.3	.3	.3

BetterManuals.net

	SERVICE DESCRIPTION	SERVICE HOURS			
		885,	990,5	1210,12	1410,12
T.	PTO UNIT AND BELT PULLEY				
T1	PTO unit: R & R.	2.3	2.5	2.5	2.5
T1a	PTO unit: D & A.	1.8	1.8	1.8	1.8
T1b	Hitch plate for drawbar: R & R.	.6	.6	.6	.6
T2	PTO shaft oil seal: R & R.	.5	.5	.5	.5
T3	Belt pulley: R & R.	.5	.5	.5	.5
T3a	Belt pulley: D & R.	2.2	2.2	2.2	2.2
U.	TRANSMISSION OIL COOLER				
U1	Trans/hyd. oil cooler and valve: R & R.	---	---	---	.5
U1a	Oil cooler and valve: D & A.	---	---	---	.7
V.	POWER STEERING				
V1	Power steering: R & R (includes operation V2)	2.8	4.0	6.0	6.0
V2	Air vent complete system.	.2	.2	.2	.2
V3	Hydraulic ram: R & R.	.3	.3	.3	1.5
V3a	Hydraulic ram: D & A.	2.0	2.0	2.0	2.0
V3b	Hydraulic ram ball joint assembly: R & R.	.2	.2	.2	---
V4	Hydraulic ram anchor bracket: R & R.	.3	.3	.3	---
V5	Pump and/or pump and bracket: R & R.	1.3	1.1	1.1	1.1
V5a	Pump drive gear or drive pulley: R & R.	.3	.3	.3	.3
V5b	Pump support bracket: R & R.	.3	---	---	---
V5c	Pump: D & A.	2.0	1.8	1.8	1.8
V6	Feed pipe, reservoir to pump and/or connecting hoses R & R.	.3	.3	.3	---
V7	Flexible pressure pipe, pump to ram: R & R.	.3	.3	.3	.3
V8	Flexible return pipe 'Tee' piece to reservoir R & R.	.3	.3	.3	---
V10	Filter element: R & R, renewing oil. Add to pump R & R when reservoir is around pump.	.5	.5	.5	.3
V11	Reservoir: R & R.	.8	.8	.8	---

BetterManuals.net

	SERVICE DESCRIPTION	SERVICE HOURS			
		885,	990,5	1210,12	1410,12
V11a	Reservoir mounting bracket: R & R.	1.2	.2	.2	---
V13	Steel pressure feed pipe pump to Orbitrol unit: R & R.	.3	1.0	---	---
	(1210/1410 models includes remove fuel tank)	---	---	3.8	3.8
V14	Steel return feed pipe and 'Tee' junction, Orbitrol unit to reservoir: R & R.	.3	.2	---	---
	(1210/1410 models includes remove fuel tank)	---	---	3.8	3.8
V15	Flexible hoses, ram to steel Orbitrol feed pipes: R & R.	.2	.2	.2	.2
V16	Steel feed pipe, Orbitrol to ram flexible hose (one only): R & R	---	.3	---	---
	(1210/1410 models includes remove fuel tank)	---	---	3.0	3.0
V17	Breather pipe assembly, reservoir to Orbitrol support bracket: R & R.	.3	.3	.3	.3
V18	Steering column assembly, complete with Orbitrol bracket: R & R.	1.0	1.0	1.2	1.2
V18a	Steering column from Orbitrol mounting bracket to change Orbitrol hand pump unit and/or mounting bracket: R & R.	.3	.3	.3	.3
V18b	Steering column: D & A.	1.0	1.0	1.0	1.0
V19	Steering wheel: R & R.	.3	.3	.3	.3
V20	Pump drive belt.	.3	---	---	---
V21	Orbitrol unit: D & A, install new seal kit (Bulletin DB-29-74)	2.0	2.0	2.0	2.0

BetterManuals.net

	SERVICE DESCRIPTION	SERVICE HOURS			
		885,	990,5	1210,12	1410,12
	TRANSVERSE POWER STEERING				
VS-1	Center ram and set toe in.	---	---	.4	.4
VS-2	Adjust front wheel bearings (both sides).	---	---	.4	.4
VS-3	R.R. one front axle extension (includes all operations).	---	---	1.2	1.2
VS-4	R.R. one king pin/stub axle and thrust washers (includes VS-6).	---	---	1.2	1.2
VS-4a	Extra time for replacing king pin/stub axle bushes one side.	---	---	.6	.6
VS-5	R.R. one front wheel.	---	---	.2	.2
VS-6	R.R. one front wheel hub to replace bearings and seal (includes VS-5).	---	---	.6	.6
VS-7	R.R. one steering arm.	---	---	.3	.3
VS-8	R.R. one track rod/tie rod ball end: Inner	---	---	.4	.4
	Outer	---	---	.2	.2
VS-9	R.R. complete front axle	---	---	1.5	1.5
VS-9a	R.R. ram and/or support linkage (including cylinder rod end adjustment and cylinder pivot peg shim adjustment).	---	---	1.5	1.5
VS-9b	D & A steering cylinder.	---	---	1.0	1.0
VS-9c	Replace trunnion pin bushings.	---	---	.6	.6
VS-10	R.R. Hose - Axle to Frame.	---	---	.2	.2
VS-11	R.R. Line - Hose to Cylinder Rod.	---	---	.2	.2
X.	FRONT WHEEL DRIVE UNIT (4WD)				
X1	Toe-in; check and adjust.	---	---	1.0	1.0
X1a	Track rod yoke: R & R.	---	---	.5	.5
X1b	Track rod: R & R.	---	---	1.0	1.0
X2	Hub drain and refill.	---	---	.8	.8
X2a	Hub end cover together with gears: R & R.	---	---	.5	.5
X2b	Planet gears: R & R.	---	---	1.0	1.0
X2c	Hub adjust preload.	---	---	.8	.8
X2d	Annulus gear or mounting flange: R & R.	---	---	.5	.5
X2e	Hub bearings: R & R.	---	---	.5	.5

BetterManuals.net

	SERVICE DESCRIPTION	SERVICE HOURS			
		885,	990,5	1210,12	1410,12
X2f	Hub oil seal: R & R.	---	---	.3	.3
X2g	Hub carrier; R & R.	---	---	.5	.5
X2h	Hub carrier oil seal and/or thrust washer: R & R.	---	---	.3	.3
X2j	Hub carrier steady bush: R & R.	---	---	.4	.4
X3	Swivel housing track rod bush: R & R.	---	---	.5	.5
X4	Steering lever: R & R.	---	---	1.2	1.2
X5	Swivel housing and/or bearings: R & R.	---	---	4.1	4.1
X5a	Swivel housing oil seal: R & R, includes neoprene seal.	---	---	.3	.3
X5b	Axle casing spherical housing oil seal and/or thrust washer: R & R.	---	---	.3	.3
X6	Universal drive shaft: R & R.	---	---	3.3	3.3
X6a	Universal drive shaft: D & A.	---	---	1.8	1.8
X7	Propellor shaft: R & R.	---	---	.8	.8
X7a	Propellor shaft joint: R & R.	---	---	1.3	1.3
X8	Differential flange and/or oil seal: R & R.	---	---	1.2	1.2
X9	Differential unit oil drain and refill.	---	---	.8	.8
X10	Differential carrier: R & R.	---	---	7.5	7.5
X11	Transfer gear box drive flange and/or oil seal: R & R.	---	---	1.5	1.5
X12	Transfer gearbox selector assembly: R & R.	---	---	.5	.5
X12a	Selector seal, fork and rod: D & A.	---	---	.8	.8
X13	Transfer box: R & R.	---	---	8.8	8.8
X13a	Transfer gearbox: D & A.	---	---	2.2	2.2
X14	Gear lever and rod mechanism: R & R.	---	---	2.5	2.5
X15	Wheel: R & R.	---	---	.3	.3
X15a	Wheel spacer: R & R.	---	---	1.0	1.0
X16	Complete axle: R & R.	---	---	8.7	8.7

BetterManuals.net

BetterManuals.net

SCHEDULE OF REPAIR TIMES

780, 880, 990 AND 1200 TRACTORS

BetterManuals.net

Pub 9-38112

PRINTED IN U.S.A.

CASE CORPORATION

BetterManuals.net

Introduction

The repair times in this publication cover the majority of normal service operations.

These times have been compiled by carrying out the repair operations under normal workshop conditions. Due allowance has been made for the fact that our engineers are more familiar with David Brown products than engineers employed by Distributors and Dealers who service a wider range of equipment, and therefore it should be possible for all skilled repair personnel to comply with these times. Circumstances may arise where additional time is involved due to seized components or other adverse conditions and where such difficulties occur in the case of Warranty repairs these details should be clearly stated on the claim form.

It is of the utmost importance that repair personnel are made fully aware of these labour times so that the work is carried out within the times scheduled.

BetterManuals.net

BetterManuals.net

Notes on the use of this Schedule

The operations are in two categories: Major (complete) and Minor (subsidiary).

A Major operation is one that is complete in itself and is shown by a capital letter, followed by a number, thus the section and operation are clearly identified (e.g. C.2 – One connecting rod and piston: R & R.

A Minor operation is one that is additional to the corresponding Major operation and is shown by a capital letter with a number and is followed by a small letter (e.g. C.2a. – Extra for removing and replacing each additional connecting rod and piston, or C.2b – Extra for fitting new rings on one piston).

The time for a Minor operation should be added to that of a Major operation to find the time for the complete job.

In some instances it may be necessary to add more than one Minor operation to find the time for a complete job.

Example: To fit new piston rings to all 4 pistons of 990 tractor

	h	min.
Major Operation C2 (one connecting rod)	6.	10
Minor Operation C2a (x3 for 3 additional conn. rods)	1.	00
Minor Operation C2b (x4 for the 4 sets of rings)	1.	20
Total Time	8.	30

In some instances where two or more Major operations are being carried out it may be necessary to deduct time from the combined total to find the true time for the whole job.

Note: The time for cylinder head removal and replacement is deducted as it is included in both Major operations B.3 and C.2.

Example: To decarbonise and grind in valves and fitting new pistons rings to a 990 tractor.

	h	min.
Major Operation B3	7.	05
Major Operation C2 (one connecting rod)	6.	10
Minor Operation C2a (x3 for 3 additional conn. rods)	1.	00
Minor Operation C2b (x4 for the 4 sets of rings)	1.	20
	15.	35
Less Major Operation B2	4.	50
Total Time	10.	45

Abbreviations

R & R	Remove and replace
D & A	Dismantle and assemble
LH	Left Hand
RH	Right Hand
h	hours
min.	minutes

BetterManuals.net

BetterManuals.net

INDEX

Section	Location	Page
A	Engine: tune up and replacement	8
B	Engine: cylinder head	8
C	Engine: cylinder block, crankshaft, bearings, pistons and sleeves	9
D	Engine: fuel system and diesel injection equipment	10
E	Engine: lubrication	11
F	Engine: manifold, exhaust system and air cleaner	12
G	Engine: timing gears, cover throttle controls and DPA drive assembly	13
H	Engine: cooling system	13
J	Flywheel and clutch	14
K	Transmission systems and reductions	15
L	Front axle and steering	16
M	Brakes, brake mechanism, foot plates and foot throttle pedal	17
N	Hydraulic system and linkage	18
O	Electrical equipment	21
P	Instruments and instrument panel	25
R	Main frame and covers	26
S	Bonnet, mudguards and seat	27
T	P.T.O. unit and belt pulley	27
V	Power Steering and Power Assisted Steering	28

BetterManuals.net

Op. No.	Details of Operation	Model			
		780	880	990	1200
		h min	h min	h min	h min
	A. ENGINE: TUNE UP AND REPLACEMENT				
A1	Engine tune up: includes check and setting injectors, adjusting valve clearance, clean and/or replace crankcase breather, clean lift pump fuel sediment bowl, clean air cleaner and renew oil, fit new filter elements and vent fuel system.	2 - 30	2 - 30	3 - 10	
	1200 model — in addition, drain and refill injection pump with new engine oil				3 - 15
A2	Engine unit: R & R (includes removal of clutch and gearbox cover)				
	Livedrive	13 - 05	10 - 10	11 - 20	18 - 15
	Non-Livedrive		9 - 15	9 - 20	18 - 15
A2a	Engine unit overhaul: includes replacing and/or examining crankshaft and bearings, fitting new pistons and sleeves (if fitted) and/or reboring and decarbonising cylinder head	23 - 50	23 - 50	22 - 10	22 - 10
	B. ENGINE: CYLINDER HEAD				
B1	Adjust valve clearances	- 45	- 45	- 50	
	1200 model — (hydraulic pump drive connected)				1 - 20
B1a	Push rod/valve tappet: R & R (cylinder head in position)	- 15	- 15	- 20	- 20
B2	Cylinder head assembly; R & R, or fit replacement cylinder head gasket	4 - 40	4 - 40	4 - 50	
	1200 model — up to Tractor No. 703005				5 - 25
	1200 model — from Tractor No. 703006				4 - 50
B3	Cylinder head: remove, decarbonise, grind in valves and refit.	7 - 45	7 - 45	7 - 05	
	1200 model — up to Tractor No. 703005				7 - 35
	1200 model — from Tractor No. 703006				7 - 05
B3a	Valves: reface	- 30	- 30	- 40	- 40
B3b	Valve seats: recut	- 25	- 25	- 40	- 40

BetterManuals.net

B3c	Valve guides: ream oversize	- 45	- 45	- 50	- 50
B3d	Valve rocker(s): rebush and ream/broach to size (per set)	- 45	- 45	1 - 30	1 - 30
	C. ENGINE: CYLINDER BLOCK, CRANKSHAFT, BEARINGS, PISTONS AND SLEEVES (IF FITTED)				
C1	Cylinder block: replacement				
	Livedrive	22 - 00	17 - 45	20 - 15	
	Non-Livedrive		18 - 40	19 - 20	
	1200 model – up to Tractor No. 703005				29 - 55
	1200 model – from Tractor No. 703006				29 - 20
C2	One connecting rod and piston: R & R	6 - 45	5 - 50	6 - 10	6 - 55
C2a	Extra for removing and replacing each additional connecting rod and piston	- 20	- 20	- 20	- 20
C2b	Extra for fitting new rings (one piston)	- 20	- 20	- 20	- 20
C2c	Extra for removing and replacing one piston from one connecting rod	- 15	- 15	- 15	- 15
C2d	Extra for rebushing one connecting rod and reaming to size	- 15	- 15	- 15	- 15
C3	One cylinder sleeve: R & R (includes removal of piston rod and connecting rod assembly)			5 - 50	
C3a	Extra for removing and replacing each additional cylinder sleeve (includes removal of piston and connecting rod assembly)			- 35	
C4	Camshaft: R & R (engine in tractor frame)	11 - 30	11 - 30	5 - 40	9 - 30
C4a	Camshaft gear: R & R	- 20	- 20		
C5	Crankshaft and bearings: R & R	17 - 15			21 - 45
	Livedrive		12 - 50	13 - 40	
	Non-Livedrive		11 - 45	11 - 40	
C5a	Crankshaft weights: R & R (to be removed for grinding purposes)	- 30			

BetterManuals.net

Op. No.	Details of Operation	Model			
		780	880	990	1200
		h min	h min	h min	h min
C6	Tractormeter drive assembly or engine speed indicator drive assembly and/or 'O' ring: R & R	- 15	- 15	- 15	- 15
C6a	Tractormeter or engine speed indicator drive gear: R & R	- 20	- 20		- 20
C7	Cylinder block: rebore (does not include time for dismantling engine) 990 model — from Tractor No. 800.001	2 - 00	2 - 00	2 - 40	2 - 40
	D. ENGINE: FUEL SYSTEM AND DIESEL INJECTION EQUIPMENT				
D1	Injectors: R & R (per set)	- 40	- 40	- 40	- 40
D1a	Injectors: check and set to correct atmospheric pressure (per set)	- 30	- 30	- 40	- 40
D1b	Injectors: dismantle, clean, check, assemble and reset pressures (per set)	2 - 15	2 - 15	2 - 35	2 - 35
D2	AC lift pump: R & R (includes operation D4)	- 30	- 30	- 30	- 30
D2a	AC lift pump: D & A	- 20	- 20	- 20	- 20
D3	Fuel filter elements: R & R and clean fuel sediment bowl	- 40	- 40	- 40	- 40
D4	Fuel system: air vent	- 20	- 20	- 20	- 20
D5	Fuel injector pipe: R & R	- 30	- 30	- 50	- 50
D6	Fuel injector pipes: R & R complete set	- 20	- 20	- 50	- 50
D7	Spill timing: check and adjust (includes operation D4)	- 30	- 30	- 30	2 - 00
D8	Fuel injection pump: R & R (includes D1, D3, D6, and D7)	3 - 25	3 - 25	3 - 00	

BetterManuals.net

D8a	Fuel injection pump (gear drive) with one piece timing cover: R & R (includes D1, D3, D6, D7, F2, G1, G2, H1 and includes hydraulic drive shaft (NS) on 1200 model)			5 - 10	10 - 30
D8b	Fuel injection pump with direct drive gear train and access cover from Tractor Nos. 449001–5114 449002–1196 449005–1183			3 - 35	
	from Engine No. AD4/55A 7457 AD4/55B 1011				5 - 50
D9	Fuel tank: R & R (tank drained) (includes operation P2)	1 - 50	1 - 50	2 - 40	2 - 45
D10	Fuel pipe, tank to AC lift pump (includes D4)	- 25		- 25	- 25
D11	Fuel filter assembly: R & R (includes operation D4 and S1)	- 40	- 40	- 35	- 35
D12	Fuel feed pipe filter to fuel injection pump: R & R (includes operation D4 and S1)	- 40	- 40	- 40	1 - 00
D13	Fuel feed pipe, AC lift pump to filter: R & R (includes operation D4 and S1)	- 30	- 30	- 30	1 - 10
D14	Fuel return pipe, DPA pump and filter to leak-off pipe connection: R & R (includes operation S1)	- 30	- 30	- 30	
D15	Fuel tap assembly: R & R (tank drained)		- 45		
D15a	Fuel tap assembly: D & A		- 20		
D16	Injector leak-off pipe: R & R (includes operation S1)	- 20	- 20	- 30	- 20
D17	Fuel pipe, tank to tap (tank drained): R & R		- 20		
D18	Fuel pipe, tap to AC lift pump: R & R		- 20		
D19	Fuel return pipe, filter assembly to leak-off pipe connection: R & R			- 10	- 20
D20	Injector pump drain pipe: R & R				- 05
	E. ENGINE: LUBRICATION				
E1	Oil filter element: R & R (excludes operation S1)	- 20	- 20	- 20	- 20

BetterManuals.net

Op. No.	Details of Operation	Model			
		780	880	990	1200
		h min	h min	h min	h min
E2	Engine oil change	- 20	- 20	- 20	- 20
E2a	Oil pump gauze: R & R (includes removal of pump)	1 - 10	1 - 10	1 - 10	1 - 10
E2b	Oil relief valve assembly: R & R (includes lapping in of valve)	- 40	- 40	- 35	- 35
E2c	Oil pump feed pipe: R & R	- 20	- 20	- 20	- 20
E3	Oil pump: R & R (DPA pump in place on 780, 880 model)	1 - 40	1 - 40	1 - 00	1 - 00
E3a	Oil pump: D & A	1 - 05	1 - 05	1 - 00	1 - 00
E4	Oil warning switch: R & R	- 05	- 05	- 05	- 05
E5	Cylinder block to cylinder head oil feed pipe: R & R	- 20	- 20	1 - 00	1 - 00
	F. ENGINE: MANIFOLD, EXHAUST SYSTEM, AND AIR CLEANER				
F1	Silencer: R & R	- 05	- 05	- 05	- 05
F2	Air cleaner and bracket: R & R	- 45	- 45	- 35	1 - 30
F2a	Battery support tray: R & R				- 10
F3	Air cleaner: D & A refilling with fresh oil	- 20	- 20	- 20	1 - 40
F4	Inlet manifold: R & R (fuel injection pump in place on 3 cylinder engines: includes operation S1)	- 40	- 40	- 30	1 - 00
F5	Air intake hose, air cleaner to radiator: R & R (includes operation S1)	- 25	- 25	- 25	- 30
F6	Air intake hose, radiator to inlet manifold: R & R (includes operation S1)	- 25	- 25	- 25	- 30
F7	Exhaust manifold: R & R (includes operation S1)	- 30	- 30	- 50	1 - 25
F7a	Exhaust manifold drain: R & R	- 05	- 05	- 05	- 10

BetterManuals.net

	G. ENGINE: TIMING GEARS, COVER, THROTTLE CONTROLS AND DPA DRIVE ASSEMBLY (IF FITTED)				
G1	Timing gear cover: R & R (includes removal of radiator)	4 - 00	4 - 00	4 - 00	6 - 30
G1a	Timing gear cover oil seal: R & R	- 05	- 10	- 10	- 10
G2	Crankcase pulley: R & R (radiator in place)	- 45	- 45	- 45	
	Crankcase pulley: R & R (includes removal of radiator)				3 - 15
G3	Timing gears: R & R (includes removal of radiator)	4 - 30	6 - 30	6 - 30	8 - 00
G3a	Timing gear carrier plate: R & R	- 20	- 20	- 20	- 20
G3b	Intermediate shaft: R & R			- 15	- 15
G4	Fuel injection pump drive gear housing assembly: R & R	3 - 50	3 - 50		
G4a	Fuel injection pump drive gear housing: D & A	- 40	- 40		
G5	Throttle cable assembly: R & R	2 - 25	1 - 10		2 - 30
	Throttle linkage: R & R			- 20	
G6	Hand throttle control lever: R & R	- 20	- 20	- 20	- 35
G7	Foot throttle pedal and linkage: R & R	- 30			
	Foot throttle linkage: R & R		1 - 30	1 - 30	
G7a	Foot throttle pedal: R & R		- 30	- 30	
G8	Foot throttle controls and linkage: R & R (includes fuel tank)				3 - 45
	H. ENGINE: COOLING SYSTEM				
H1	Radiator: R & R	2 - 10	2 - 10	2 - 00	2 - 55
H2	Radiator top hose: R & R	- 40	- 40	- 40	- 40

BetterManuals.net

Op. No.	Details of Operation	Model 780	880	990	1200
		h min	h min	h min	h min
H2a	Water outlet or thermostat: R & R	- 15	- 15	- 15	- 15
H3	Radiator bottom hose: R & R	- 40	- 40	- 35	- 35
H4	Cylinder block drain tap: R & R	- 20	- 20	- 20	- 20
H5	Fan belt: R & R	- 25	- 25	- 25	
	1200 model: in addition (disconnect hydraulic pump drive)				1 - 15
H6	Water pump: R & R, and/or bypass hose, and/or 'O' ring seal	3 - 30	4 - 00	4 - 00	4 - 00
H6a	Water pump: D & A	1 - 10	1 - 10	1 - 10	1 - 00
H7	Fan blades: R & R	2 - 30	2 - 30	2 - 30	2 - 55
	1200 model: (includes H1 from Tractor No. 705365)				3 - 25
H8	Radiator: drain and refill	- 15	- 15	- 15	- 15
	J. FLYWHEEL AND CLUTCH				
J1	Single clutch: R & R (includes operation J2)		6 - 25	5 - 50	10 - 00
	1200 model – by splitting tractor at the flywheel housing				8 - 00
	Double clutch: R & R (includes operation J2)	7 - 35	8 - 00	7 - 20	10 - 00
	Double clutch: R & R (includes operation J2) 12–speed gearbox (by splitting tractor at flywheel housing)		5 - 15	5 - 15	8 - 00
J1a	Single clutch: D & A		1 - 10	1 - 10	2 - 00
	Double clutch: D & A	3 - 15	3 - 10	3 - 10	4 - 00
J1b	Flywheel: R & R	- 35	- 35	- 35	- 35
J1c	Transmission clutch cross shaft: R & R				- 50
J1d	PTO clutch cross shaft: R & R				- 30

BetterManuals.net

J2	Clutch pedal: adjust free play (double/single)	- 15	- 15	- 15	- 15
J2a	Extra for adjusting internal clearances	- 30	- 30	- 30	
J3	Clutch cross shaft: R & R (Standard)	5 - 15	7 - 30	5 - 25	
	Livedrive		9 - 10	7 - 00	
J4	Hand clutch assembly' R & R		1 - 35	1 - 35	
J5	Clutch brake: R & R	6 - 30	5 - 30	5 - 30	5 - 45
J6	Clutch pedal: R & R	- 50			
J7	Hand clutch: Adjust free play				- 10
J8	Hand clutch: adjust latch pin lever				- 15
J9	Hand clutch lever: R & R				1 - 05
J9a	Hand clutch lever: D & A				- 30
	K. TRANSMISSION SYSTEMS AND REDUCTIONS				
K1	Gearbox: R & R				
	(Axle in place – includes 6–speed 780)	9 - 40			14 - 15
	(Livedrive – includes removal of rear axle assembly but not the clutch)	12 - 00	10 - 55	10 - 50	
	(Standard – includes removal of rear axle assembly but not the clutch)		9 - 45	9 - 45	
K1a	Gearbox: D & A (excludes operations K1b and K1c)				
	(6–speed)	3 - 50	3 - 45	3 - 45	4 - 40*
	(12–speed)	5 - 10	5 - 10	5 - 10	6 - 35*
	*1200 model – use stand made to Miscellaneous Drg. No. 1747				
K1b	Differential and crown wheel: D & A	2 - 20	2 - 20	2 - 20	2 - 20
K1c	Crown wheel and pinion: adjustment	1 - 30	1 - 30	1 - 30	
	Crown wheel to pinion: adjustment				- 30
K2	Selector gear levers: R & R				
	(6–speed)	- 55	- 55	- 55	- 55
	(12–speed)	1 - 25	1 - 25	1 - 25	- 55

BetterManuals.net

Op. No.	Details of Operation	Model			
		780	880	990	1200
		h min	h min	h min	h min
K3	Rear wheel: R & R	- 20	- 20	- 20	- 20
K4	Reduction: R & R (includes operation K3)	1 - 30	1 - 30	1 - 30	1 - 50
K4a	Brake drum: R & R	- 25	- 35	- 35	- 35
K4b	Reduction: D & A (includes operation K4a)	4 - 30	6 - 00	6 - 00	4 - 50
K4c	Rear axle casing oil seal: R & R (includes remove and refit brake shoe assembly)	- 35	- 35	- 35	- 40
K5	Final drive shaft and/or bearings and/or oil seal: R & R	3 - 45	3 - 45	3 - 45	3 - 30
K6	Differential lock Sleeve: R & R (includes operation K4 and K4c – excludes changing transmission oil: use service tool manufactured to miscellaneous Drg. No.1081)	3 - 00	3 - 00	3 - 00	3 - 20
K7	Differential lock pedal: R & R	- 20	- 20	- 20	2 - 45
K8	H/L range selector rod: R & R (gearbox in place)		4 - 35	5 - 20	
K9	H/L range selector plunger and spring: R & R (gearbox in place)	6 - 25	2 - 20	3 - 55	
K10	Transmission oil (includes cleaning filter screen and/or cleaning magnetic filter)	- 45	- 45	- 45	
K10a	Additional time for full flow filter	- 15	- 15	- 15	1 - 10
	L. FRONT AXLE AND STEERING				
L1	Front wheel: R & R	- 15	- 15	- 15	- 15
L1a	Front hub and/or bearings and/or oil seal and/or dirt excluder: R & R	- 35	- 35	- 35	- 35
L1b	Stub axle and/or Steering lever and/or bushes: R & R	1 - 10	1 - 10	1 - 10	1 - 10
L2	Front hub: adjustment	- 15	- 15	- 15	- 15

PeterManuals.net

L3	Front wheel: adjust and check alignment (toe-in)	- 25	- 25	- 25	- 25
L4	Front axle complete: R & R	1 - 35	4 - 05	4 - 05	7 - 40
L4a	Front axle trunnion pin bushes: R & R	- 50	- 35	- 35	- 35
L5	Ball socket assembly: R & R (includes operation L3)	- 35	- 35	- 35	- 35
L6	Steering box and column assembly: R & R	- 45	- 55	1 - 10	1 - 15
L6a	Steering box and column assembly: D & A, fitting new drop arm shaft bushes	2 - 00	2 - 40	2 - 40	3 - 50
L7	Steering wheel: R & R	- 20	- 20	- 20	- 20
L8	Track rods and spacer tube: R & R	- 45	- 45	- 45	- 45
L9	Side steering rod: R & R	- 30	- 30	- 30	- 30
L10	Drop arm: R & R	- 30	- 20	- 20	- 20
	M. BRAKES, BRAKE MECHANISM, FOOTPLATES AND FOOT THROTTLE PEDAL				
M1	Brakes: adjust and test	- 25	- 25	- 25	- 25
M2	Brake shoes: R & R (one side only) (includes operation K4)	1 - 45	1 - 45	1 - 45	2 - 40
M2a	Brake shoes: reline (one pair)	- 30	- 35	- 35	- 50
M2b	Brake camshaft and bushes (one side)				- 30
M2c	Brake shoe adaptor plate				- 15
M3	Brake cross shaft: D & A (includes removal of footplates)	1 - 30	1 - 35	1 - 35	3 - 20
M3a	Brake cross shaft tube and 'O' rings: R & R (includes operation K10)				2 - 00
M4	Handbrake lever: R & R	- 40	- 30	- 30	- 30

BetterManuals.net

Op. No.	Details of Operation	Model			
		780	880	990	1200
		h min	h min	h min	h min
M5	Brake rod assembly: R & R	- 10	- 10	- 10	- 10
M5a	Brake rod assembly: D & A				- 15
M6	Foot throttle pedal: R & R	- 30	- 30	- 30	- 20
	N. HYDRAULIC SYSTEM AND LINKAGE				
N1	Suction gauze: clean and replace or replace filter, fitting new 'O' rings (includes operation K10)	1 - 00	1 - 00	1 - 00	1 - 10
N1a	Suction filter housing: R & R				- 35
N1b	Long/short suction pipe and/or filter housing sealing ring: R & R				3 - 05
N2	Pressure relief valve: R & R (includes operation K10)				1 - 55
N2a	Pressure supply pipe – centre connection to distributor block and/or combining valve: R & R				- 25
N3	Suction pipe elbow to pump and 'O' ring: R & R				1 - 55
N3a	Suction pipe bend and/or front suction hoses: R & R				1 - 00
N4	Hydraulic pump, R & R (includes operation K10)	3 - 45	3 - 45	3 - 45	2 - 55 1 - 00
N4a	Hydraulic pump: D & A (excludes operations N4b and N4d) (single pump) (tandem pump)	2 - 00	2 - 00	2 - 00	1 - 45 - 35 1 - 10
N4b	Hydraulic pump gear: R & R	- 20	- 20	- 20	
N4c	Hydraulic pump support plate: R & R	- 25	- 25	- 25	- 15

PeterManuals.net

N4d	Hydraulic pump relief valve: R & R	- 20	- 20	- 30	
N4e	Hydraulic pump suction pipe: R & R	- 20	4 - 10	4 - 10	
N5	Hydraulic pump drive (from engine): R & R				1 - 05
N6	Hydraulic high and low pressure supply pipes: R & R	10.- 00	12 - 20	12 - 50	
N7	Pressure supply pipe from pump to centre connection: R & R				3 - 45
N8	Pressure supply pipe distributor block or combining valve to ram cylinder connector or three-way valve: R & R				1 - 20
N9	Ram cylinder connector and/or three-way valve: R & R	- 15	- 15	- 15	- 15
N10	Combining valve: R & R				- 40
N10a	Combining valve: D & A				- 20
N11	Distributor block: R & R, fitting new 'O' rings				- 30
N12	Low pressure supply pipes: R & R (includes operation K1) Low and high pressure supply pipes, includes removal of rear axle	10 - 00	12 - 20	12 - 50	15 - 00
N13	Hydraulic by-pass filter: R & R (up to Tractor No.880/543156, 990/502546, 1200/705359)		- 30	- 30	- 30
N13a	Hydraulic by-pass filter element: R & R (up to Tractor No.880/543156, 990/502546, 1200/705359)		- 15	- 15	- 15
N14	Check adjustment of hydraulic controls (excludes control valve assembly settings)	- 35	- 35	- 35	- 35
N15	Hydraulic control lever, quadrant and housing: R & R (excludes operation N14)	- 30	- 30	- 30	- 45
N15a	Hydraulic control lever or quadrant: R & R (excludes operation N14)	- 50	- 50	- 50	- 50
N15b	Pressure pipe assembly — distributor block to Selectamatic control valve assembly: R & R (includes operations K4 and N11)				5 - 00
N16	Rate of lowering control valve assembly spindle: R & R (excludes operation N14)	- 20	- 20	- 20	- 20

BetterManuals.net

Op. No.	Details of Operation	Model			
		780	880	990	1200
		h min	h min	h min	h min
N17	Rate of lowering control knob: R & R	- 20	- 20	- 20	- 20
N18	Sensing unit: R & R (includes operation N14)	1 - 25	1 - 25	1 - 25	1 - 45
N18a	Sensing unit: D & A	- 25	- 25	- 25	- 30
N18b	Sensing unit cable anchorage: R & R	- 40	- 40	- 40	- 40
N19	Sensing unit cable: R & R	- 50	- 50	- 50	- 50
N20	Ramshaft: R & R complete with Selectamatic control valve assembly and ramshaft bracket	3 - 30	3 - 30	3 - 30	3 - 40
N20a	Selectamatic control valve assembly: R & R from ramshaft bracket	- 30	- 30	- 30	- 30
N20b	Selectamatic control valve assembly' D & A (excludes operationN19)	2 - 00	2 - 00	2 - 00	2 - 00
N20c	Hold relief valve, fit new assembly or adjust shims as per T.S.B. 43 Hydraulics	- 15	- 15	- 15	- 15
N20d	Right-hand ramshaft bracket: R & R	- 25	- 25	- 25	- 25
N20e	Additional time for dismantling right-hand ramshaft bracket, fitting new bush and reassembling	- 35	- 35	- 35	- 35
N20f	Adjust control valve assembly	- 35	- 35	- 35	- 35
N20g	Ramshaft connecting rod: R & R	- 15	- 15	- 15	- 15
N20h	Ram cylinder piston: R & R, fitting new 'O' ring and anti-extrusion ring	- 45	- 45	- 45	- 45
N20j	Ram cylinder: R & R, replacing sealing 'O' ring	- 20	- 20	- 20	- 20
N21	Selector knob, selector panel and/or breather: R & R	- 20	- 20	- 20	- 20
N22	Rear axle external services conne & R	- 20	- 15	- 15	

BetterManuals.net

N23	Draw bar assembly: R & R	- 30	- 30	- 30	- 30
N23a	Hitch bracket: R & R	- 15	- 15	- 15	- 20
N24	Ram cylinder cover and lift hatch: Remove, dismantle, reassemble and replace	- 30	- 35	- 35	- 35
N25	Check chain assembly: R & R, fitting new anchor bracket where necessary 990 model – up to Tractor No.804700 1200 model – up to Tractor No. 706230	- 25	- 25	 - 25	 - 30
N25a	Check chain: R & R (one only)			- 10	- 10
N26	One lift rod: R & R	- 15	- 15	- 15	- 15
N26a	Right-hand lift rod: D & A	- 35	- 35	- 35	- 35
N27	Lower links: R & R	- 15	- 15	- 15	- 15
N28	Top link: D & A (880 and 990 model – excludes overload release mechanism)	- 15	- 15	- 15	- 15
N29	Hold and by-pass valves: R & R 1200 model – tandem pump	- 35	- 35	- 35	- 35 1 - 30
N30	Three-way valve: R & R	- 35	- 35	- 35	- 35
N30a	Three-way valve: D & A	- 30	- 30	- 30	- 30
N31	Dump valve: R & R	- 25	- 25	- 25	- 25
N31a	Dump valve: D & A	- 40	- 40	- 40	- 40
N32	Exactor coupling or quick release coupling: R & R	- 15	- 15	- 15	- 15
	O. ELECTRICAL EQUIPMENT				
O1	Battery: disconnect	- 05	- 05	- 05	- 05
O1a	Battery: R & R	- 35	- 35	- 35	- 30

BetterManuals.net

Op. No.	Details of Operation	Model			
		780	880	990	1200
		h min	h min	h min	h min
O1b	Battery to earthcable: R & R	- 10	- 10	- 10	- 10
O1c	Battery to starter cable: R & R	- 25	- 25	- 40	- 40
O2	Cable, starter to earth: R & R	- 05	- 05	- 05	- 05
O3	Dynamo: R & R	- 40	- 40	- 40	- 40
O4	Fuel tank gauge unit: R & R	2 - 10	2 - 10	2 - 10	2 - 10
O5	Horn and horn bracket: R & R (where fitted)	- 25	- 25	- 25	- 25
O6	Horn to connector wire: R & R	- 30	- 35	- 35	- 35
O7	Connector to horn pushbutton: R & R	1 - 15	1 - 15	2 - 40	2 - 40
O8	Horn pushbutton wire to isolation/ignition switch: R & R	1 - 15	1 - 25	2 - 45	2 - 45
O9	Starter: R & R	- 30	- 30	- 30	- 40
O10	Starter safety switch: R & R				
	(pedal operated)	- 20			- 45
	(up to Tractor No. 880/544391 and 990/504026)		- 25	2 - 40	
	(from Tractor No. 880/547055 and 990/800751)		- 20	- 20	
O11	Lead – Starter safety switch: R & R	- 20			
	(includes operation P2 and up to Tractor No. 880/547054 and 990/800750)		1 - 35	2 - 40	
	Lead – Starter safety switch: R & R				
	(from Tractor No. 880/547055 and 990/800751)		- 20	- 20	
	Lead – starter safety switch and vacuum switch: R & R				1 - 00
O12	Engine guide tube and wiring: R & R	1 - 30	1 - 30	1 - 10	1 - 10
O13	One head lamp: R & R	- 25	- 25	- 25	- 15

BetterManuals.net

O14	Leads – head lamps: R & R	- 30	- 30	- 30	1 - 10
O15	Lead – seat support to instrument panel (includes operation S2)	- 40	- 20	- 20	- 25
O16	Seat support connector to L.H side/tail lamp wire connector: R & R (includes operation S2)	- 45	- 20	- 20	
	Lead – seat support to L.H mudguard: R & R				- 35
O17	Lead – seat support connector to R.H side/tail/rear floodlamp wire connectors: R & R (includes operation S2)	- 45	- 25	- 25	
	Lead – seat support to R.H mudguard: R & R				- 40
O18	Lead – seat support connector to tail lamp: R & R (includes operation S2)	- 45	- 30	- 30	
O19	Trailer connectors and wires: R & R (includes operation S2)	- 20	- 20	- 20	- 30
O20	Number plate lamp: R & R	- 20	- 20	- 20	- 10
O21	Rear floodlamp: R & R	- 20	- 20	- 20	- 20
O22	Regulator: R & R includes operation P3	1 - 30			
	includes operation P3 from Tractor No. 880/544392 and 990/504027		1 - 30	1 - 45	
O23	Leads – L.H and R.H side/tail/rear floodlamp: R & R (includes operation S3)	- 40	- 40	- 40	
O24	Lead – side lamp, left hand: R & R				- 25
O25	Lead – side lamp, right hand; R & R				- 25
O26	Lead – tail lamp, left hand: R & R				- 25
O27	Lead – tail lamp, right hand: R & R				- 25
O28	Side lamp: R & R				- 20
O29	Tail lamp: R & R				- 25

BetterManuals.net

Op. No.	Details of Operation	Model			
		780	880	990	1200
		h min	h min	h min	h min
O30	Lead – rear number plate: R & R	- 30			- 15
O31	Lead – fuel gauge to tank unit: R & R (where fitted)	- 35			
	(where fitted: remove instrument panel included)				1 - 25
O32	Lead – rear flood light wire: R & R				- 15
O35	Oil warning sender: R & R	- 10	- 10	- 10	- 10
O37	Temperature gauge sender: R & R	- 25	- 25	- 25	- 25
O38	Temperature gauge to sender wire connector: R & R		1 - 30	2 - 20	
O39	Lead – temperature gauge to starter/isolating switch				
	(up to Tractor No. 880/544391 and 990/504026)		- 45	2 - 20	
	Temperature gauge sender wire connector: R & R				
	(up to Tractor No. 880/544391 and 990/504026)		1 - 15	1 - 00	
O40	Vacuum switch guard: R & R	- 20	- 20	- 20	- 20
O40a	Vacuum switch: R & R	- 15			- 15
	(from Tractor 880/543156 and 990/502546)		- 15	- 15	
O41	Lead assembly – vacuum switch: R & R switch to connector – connector to instrument panel	1 - 35	1 - 00	1 - 00	1 - 00
O44	Wiring harness and connector to instrument panel: R & R	1 - 30	1 - 45	2 - 00	1 - 15
	(from 880/544392 and 990/504027 Tractors)				
O45	Wiring harness – instrument panel: R & R (incorporates fuse and warning lights)	1 - 30	1 - 45	2 - 00	2 - 00
O46	Wiring harness – fuel gauge: R & R		- 45	1 - 10	
	Ignition and oil warning light leads: R & R (up to Tractor No. 880/544391 and 990/504026)		- 40	1 - 00	

PetterManuals.net

	P. INSTRUMENTS AND INSTRUMENT PANEL				
P1	Fuel cut-off control: R & R				- 15
P2	Instrument panel c/w instruments: R & R	1 - 00	1 - 00	1 - 15	1 - 20
P2a	Fuel cut-off control: R & R	- 35	- 35	- 35	
P2b	Temperature gauge: R & R	- 35	- 35	- 35	- 10
P2c	Isolation/ignition and starter switch: R & R	- 35	- 35	- 35	- 10
P2d	Light switch: R & R	- 45	- 45	- 45	- 10
P2e	Fuel gauge: R & R (where fitted)	- 35	- 35	- 35	- 10
P2f	Warning lights: R & R (vacuum, ignition and oil) from Tractor No. 880/543156 and 990/502546	- 50	- 50	- 50	- 50
P2g	Oil and ignition warning lights instrument: R & R		- 50	- 50	
P2h	Fuse holder: R & R (where fitted)		- 30	- 30	- 20
P2j	Horn button: R & R	- 30	1 - 00	1 - 00	- 10
P2k	Engine speed indicator or tractormeter: R & R	- 30	- 30	- 30	- 30
P2l	Engine speed indicator or tractor meter cable: R & R	- 25	- 25	- 25	- 25
P2m	Regulator: R & R	- 20	- 20	- 20	- 20
P2n	Fuel gauge: R & R	- 35	- 35	- 35	- 35

BetterManuals.net

Op. No	Details of Operation	Model			
		780	880	990	1200
		h min	h min	h min	h min
	R. MAIN FRAME AND COVERS				
R1	Clutch cover/gearbox cover: R & R (includes operation L6, O15 and S2)	6 - 05			
	Gearbox cover: R & R (includes operations L6, O15 and S2)		2 - 00	2 - 50	5 - 00
R2	Clutch cover: R & R		3 - 55	3 - 30	5 - 30
R3	Engine pump: R & R	- 50	- 50	- 50	- 50
R4	Front main frame: R & R	16 - 30			22 - 25
	(livedrive)		11 - 30	13 - 40	
	(Non-livedrive)		10 - 30	11 - 50	
R5	Gearbox pump filter housing: R & R	1 - 00	1 - 00	1 - 00	1 - 10
R6	Rear axle case: R & R	10 - 30	13 - 20	14 - 15	24 - 10
R7	Rear main frame: R & R	16 - 30	16 - 00	17 - 30	23 - 00
R8	Rear axle gasket: R & R	9 - 00	11 - 00	11 - 30	21 - 00
R9	Front extension: R & R		4 - 35	4 - 35	7 - 40
R10	Flywheel housing: R & R (by splitting tractor)		7 - 40		
R11	L.H and R.H foot plates: R & R	1 - 30	1 - 35	1 - 35	3 - 20
R11a	Additional time for hand clutch mechanism				1 - 30

PetterManuals.net

	S. BONNET, MUDGUARDS AND SEAT				
S1	Bonnet top: R & R (excludes electrical operations)	- 15	- 15	- 15	- 15
S1a	Bonnet front: R & R				1 - 25
S2	Seat and support bracket: R & R	- 20	- 20	- 20	- 20
S2a	Seat support from support bracket: R & R	- 20	- 20	- 20	- 20
S2b	Seat: D & A	- 45	- 45	- 45	
S3	Mudguard: R & R (excludes electrical operation)	- 30	- 30	- 30	- 30
S3a	Additional time for mounting brackets				- 45
S4	Fit new seat cover : R & R	- 15	- 15	- 15	- 15
	T. P.T.O. UNIT AND BELT PULLEY				
T1	P.T.O. unit: R & R	2 - 20	2 - 20	2 - 20	3 - 00
T1a	P.T.O. unit: D & A	1 - 45	1 - 45	1 - 45	1 - 45
T1b	Hitch plate for drawbar: R & R	- 35	- 35	- 35	- 35
T2	P.T.O. shaft oil seal: R & R	- 30	- 30	- 30	- 30
T3	Belt pulley: R & R	- 30	- 30	- 30	- 30
T3a	Belt pulley: D & A	2 - 10	2 - 10	2 - 10	2 - 10

BetterManuals.net

Op. No.	Details of Operation	Model No.						
		780	880	990			1200	
	V. POWER STEERING AND POWER ASSISTED STEERING *N.B. Operation V2 must be added to any operation which entails the removal of pipework, reservoir, pump or ram.*	Power Assisted Steering	Power Assisted Steering Pump on L.H.Side	Power Assisted Steering Pump on L.H.Side AD4/47	Power Assisted Steering Pump on R.H.Side 449001/2	Power Steering No Drag Link 449001/2	Power Assisted Steering Pump on R.H.Side	Power Steering No Drag Link
		h min	h min	h min	h min	h min	h min	h min
V1	Power assisted steering: R & R	2 - 45	2 - 45	2 - 45	3 - 10		3 - 30	
	Power steering: R & R (includes operation V2)					4 - 00		6 - 00
V2	Air vent complete system		- 10	- 10	- 10	- 10	- 10	- 10
V3	Hydraulic ram: R & R	- 35	- 35	- 35	- 35	- 20	- 35	- 20
V3a	Hydraulic ram: D & A	3 - 15	3 - 15	3 - 15	3 - 15	2 - 00	3 - 15	2 - 00
V3b	Hydraulic ram ball joint assy: R & R					- 10		- 10
V4	Hydraulic ram anchor bracket R & R	- 20	- 20	- 20	- 20	- 20	- 20	- 20
V5	Pump: and/or pump and bracket: R & R	1 - 15	1 - 05	1 - 05	1 - 05	1 - 05	1 - 05	1 - 05
V5a	Pump drive gear or drive pulley: R & R	- 15	- 15	- 15	- 15	- 15	- 15	- 15
V5b	Pump support bracket: R & R	- 15	- 15					
V5c	Pump: D & A	2 - 00	2 - 00	2 - 00	1 - 45	1 - 45	1 - 45	1 - 45
V5d	Reservoir from pump: R & R			- 15				
V6	Feed pipe, reservoir to pump and/or connecting hoses: R & R	- 15	- 15	- 15	- 15		- 15	- 15
V7	Flexible pressure pipe, pump to ram: R & R	- 15	- 15	- 15	- 15		- 15	
V7a	Steel pressure pipe, pump to ram flexible pipe: R & R				- 15		- 15	

BetterManuals.net

V8	Flexible return feed pipe, ram to reservoir or 'Tee' piece: R & R	- 10	- 10	- 10			- 20	
V9	Flexible return pipe, 'Tee' piece to reservoir: R & R						- 15	
	Steel return feed pipe, pump to 'Tee' piece and flexible hose: R & R				- 20		- 20	
V10	Filter element: R & R, renewing oil	- 20	- 20	- 20	- 20	- 30	- 20	- 30
V11	Reservoir: R & R	- 45	- 30		- 40		- 40	- 45
V11a	Reservoir mounting bracket: R & R	- 10	- 10		- 10	- 10	- 10	- 10
V12	Drag link: R & R		- 30	- 30	- 30		- 30	
V13	Steel pressure feed pipe to Orbitrol unit: R & R					1 - 00		
	(includes remove fuel tank)							3 - 45
V14	Steel return feed pipe and 'Tee' junction, Orbitrol unit to reservoir: R & R					- 10		
	(includes remove fuel tank)							3 - 45
V15	Flexible hoses, ram to steel Orbitrol feed pipes: R & R					- 10		- 10
V16	Steel feed pipe, Orbitrol to ram flexible hose (one only): R & R					- 15		
	(includes remove fuel tank)							3 - 00
V17	Breather pipe assembly, reservoir to Orbitrol support bracket: R & R					- 15		- 15
V18	Steering column assembly, complete with Orbitrol unit and mounting bracket: R & R					1 - 00		1 - 00
V18a	Steering column from Orbitrol mounting bracket to change Orbitrol unit and/or mounting bracket: R & R					- 15		- 15
V19	Steering wheel: R & R		- 20	- 20	- 20	- 20	- 20	- 20
V20	Flexible return feed pipe, pump steel pipe to 'Tee' piece, flexible hose: R & R				- 20			
V21	Pump drive belt: R & R	- 20	- 20	- 20				

BetterManuals.net

BetterManuals.net

Diesel Engine
3 Cylinder

BetterManuals.net

BetterManuals.net

3 CYLINDER DIESEL ENGINES

770, 780, 880 AND 885 TRACTORS

BetterManuals.net

CASE CORPORATION

Pub 9-37101

PRINTED IN U S A

BetterManuals.net

Introduction

The different versions of the three-cylinder engine utilise common cylinder blocks and cylinder heads but have different pistons and crankshafts. The first two series of engines — AD3/30 and AD3/40 — were fitted with dry cylinder sleeves, which had a bore of $3\frac{13}{16}$ in. (96·8 mm), but sleeves are not fitted to the later series engines — AD3/49, AD3/55 and 355011. The $3\frac{15}{16}$ in. (100 mm) diameter pistons operate directly in the cylinder block, which has the same bore diameter as the earlier sleeved block, and a ridged sealing ring is fitted at the top of the bore to seal the cylinder head gasket.

As engines must have a flywheel suitable for the clutch (Livedrive or Non-Livedrive), the engine designation includes a suffix letter (A or B) to indicate the type of flywheel fitted, and therefore the tractor model on which the engine is used.

Engine Designation and Tractor Models

Engine Series	*Tractor Model*	*Tractor Number*
AD3/30A **AD3/30B**	**770 Selectamatic Livedrive** **770 Selectamatic Non-Livedrive**	**580001 to 581999**
AD3/49A **AD3/49B**	**770 Selectamatic Livedrive** **770 Selectamatic Non-Livedrive**	**582001 onwards**
355011 *	**780 Selectamatic Livedrive**	**600001 onwards** **645001 onwards (Narrow)**
AD3/40A **AD3/40B**	**880 Implematic Livedrive** **880 Implematic Non-Livedrive**	**521001 to 521999**
AD3/55A **AD3/55B**	**880 Selectamatic Livedrive** **880 Selectamatic Non-Livedrive**	**530001 onwards**

* The new style of engine designation is coded as follows:

First digit — number of cylinders.

Second and third digits — together these give the nominal capacity, in cubic inches of one cylinder. (The approximate capacity, in cubic inches, of an engine can be obtained by multiplying the first digit by the second and third digits, e.g. 3×55 = 165 cu. in.)

Fourth digit — type of fuel: 0 for diesel. (1 would be gasolene.)

Fifth digit — design series: 0 is the first series and 1 is the second, etc. This number is used to identify engines which are in different forms to suit different tractor frames.

Sixth digit — type of clutch: 1 Livedrive, 2 single plate, 5 twin plate.

The designation is then followed by the engine serial number: these are consecutive and allow individual engines in each type to be identified.

Example: 3 5 5 0 1 1 / 10797 is a 4-cylinder, 165 cu. in. capacity, diesel, second series, livedrive model, serial number 10797.

3 — 3-cylinder
5 5 — 55 cu. in.
0 — diesel
1 — second series
1 — livedrive

BetterManuals.net

BetterManuals.net

CONTENTS

SECTION	Page
Maintenance	1
Fuel System	5
Lubrication System	12
Cooling System	16
Repair Operations	
Engine Tune	18
Decarbonising	19
Pistons and Connecting Rods	23
Crankshaft and Bearings	25
Cylinder Block	26
Engine Removal	27
Timing Gears	30
Valve Gear	31
Dimensional Data	33
Summary of Design Changes	39
Approved Lubricants	44

BetterManuals.net

BetterManuals.net

MAINTENANCE

Daily

Check engine oil level. Top up if necessary.

Check air cleaner. Remove filter bowl and examine the oil. In dusty conditions the air cleaner oil should be changed frequently, the detachable wire mesh element removed, washed in diesel fuel, and allowed to stand until all oil has drained off. (See note regarding air cleaner maintenance.)

If a paper element pre-cleaner is fitted, remove the cover and examine the element. If it is dirty, remove the element and tap it on the side to shake off dust. **Do not attempt to wash a paper element.** Examine for any water, fuel or lubricating oil leaks.

Greasing: In dusty or wet and muddy conditions apply lubricant to the

SAE 140 oil
- King pins
- Front axle trunnions

Grease
- Front hubs
- Steering box cross shaft
- Rear hubs

Every 60 hours

Check engine oil level. Top up to the "full" mark on dipstick if required.

Check radiator water level and top up to within 1 in. (2·5 cm) from top if required. If the engine is hot, remove radiator cap slowly as the system is pressurised and may scald the hand if opened quickly.

Visually check the feed pump sediment bowl. Remove and clean if there is any accumulation of dirt or water.

Gearbox Oil: Top up the gearbox oil to within the safe marks on the dip stick if necessary.

Greasing: Apply lubricant to the following after cleaning the grease points:

SAE 140 oil
- King pins
- Front axle trunnions

Grease
- Front hubs
- Steering box cross shaft
- Steering column top bearing
- Clutch cross shaft
- Rear hubs
- Brake pedal
- Sensing unit cable
- Hydraulic lift ramshaft
- Lift rod and levelling lever

Controls: Lubricate the controls and pivots with new engine oil. In dry dusty conditions these points are best left unlubricated.

Brakes: Check that the brakes pull evenly when the two pedals are locked together.

Clutch: Check the free play and reset if necessary.

Water: Top up the radiator if necessary.

Battery: Top up the battery with distilled water to just above the tops of the separators. Ensure the vent holes in the caps are clear.

Tyres: Inflate tyres to the correct pressure.

Air Cleaner

Air Cleaner Oil: Air cleaner oil should be changed and the detachable wire mesh element removed and in dusty conditions washed frequently. The maximum dust deposit in the cleaner bowl should never be allowed to exceed ¼ in., checked after standing overnight, otherwise oil pullover into the induction manifold will take place, due to the raised oil level.

Evidence of oil in the induction manifold, which indicates oil pullover, can be easily checked through the ether plug aperture in the inlet manifold. This pullover is highly detrimental and must be prevented by adequate cleaner maintenance. An SAE 30 grade of straight mineral oil is less susceptible to frothing, and usually cheaper, than the detergent oils used in the engine. In climates where the ambient temperature often exceeds 32°C (90°F) an S AE 50 grade oil may be used. Care should be taken not to overfill the bowl. Only fill to the level mark — not above or below it.

Air Cleaner 'O' Rings: When assembling the air cleaner care should be taken to ensure that the 'O' rings between the cleaner body, lower element and oil bowl are correctly fitted to ensure an air-tight seal. The fit of these 'O' rings is particularly important, as the upper ring may be easily displaced when the oil bowl and lower element are being fitted. The 'O' ring should not be twisted and should fit securely on the small notched register on the lower edge of the air cleaner body. If the 'O' rings are damaged during assembly new rings must be fitted.

Paper Element Pre-cleaner

This is an alternative fitting to the centrifugal type pre-cleaner and incorporates a replaceable paper element. Frequency of attention depends on working conditions and in dusty climates the cover should be removed every few hours of use and the element examined. The element can be cleaned by tapping its side to shake off the loose dust. If the element becomes very dirty, or contaminated with oil or water, it should be renewed. **Do not attempt to wash an element.**

Every 125 Hours

Engine Oil: Drain the oil, while it is still warm, through the sump plug on the underside of the sump plate. Refill with approved oil to within the safe marks on the dipstick. For list of approved lubricants see Page 44.

Final drive oil check: Top up the final drive reduction units to the plug with new oil if necessary. Check that the vent hole in the plug is clear.

Betorvan

Every 250 Hours

Engine Oil and Filter: Drain the oil when warm and remove filter bowl. Discard the old element and clean bowl out with clean diesel fuel, using a brush to make sure that the by-pass valve is perfectly clean. Fit a new element and check the sealing ring in the cylinder block groove; fit a new ring if it is damaged or distorted. Do not overtighten the bowl securing bolt — 10 lb ft (1·4 kg metres) is sufficient.

Refill the sump with new oil, start engine to fill the filter then recheck the oil level.

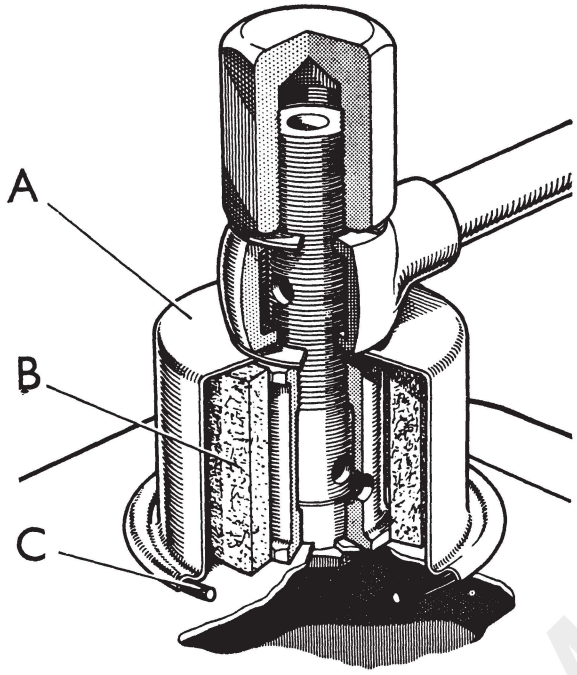

Figure 1. ENGINE BREATHER (Early engines)

A. Cover **B.** Element
C. Sealing ring

Engine Breather: Remove the domed nut from top and remove the pipe. Lift the cover off and remove breather element. Clean the top of rocker cover and fit a new element. Replace breather cover, ensuring that the 'O' ring is correctly located in the cover lip and replace pipe and nut. Failure to change the breather element could cause excessive pressure to build up in the crankcase with resulting oil leakage from the crankshaft seals. (Fig. 1.)

The engine breather was deleted on the

AD3/55A	serial number	15561 onwards
AD3/55B	serial number	2556 onwards
AD3/49A	serial number	7589 onwards
AD3/49B	serial number	1609 onwards

The engine breather is now direct to the atmosphere.

Every 500 hours

Remove and clean the fuel sediment bowl (Fig. 2) and wash with clean diesel fluid. Refill the bowl with fuel before replacing to prevent excessive amount of air entering the system. Bleed at the inlet to the first filter.

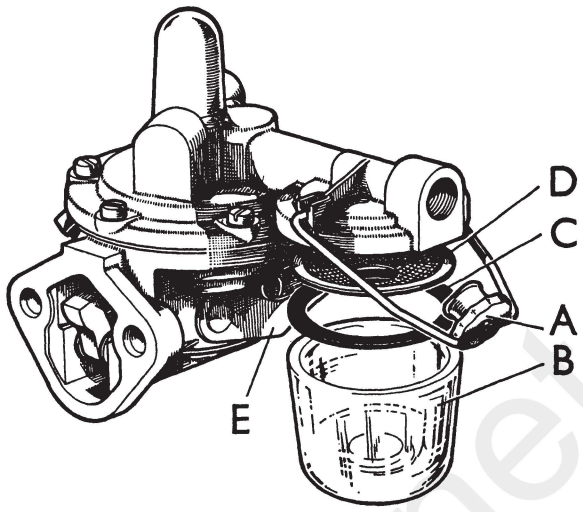

Figure 2. FUEL FEED PUMP SEDIMENT BOWL

A. Bowl securing nut **B.** Sediment bowl
C. Sealing ring **D.** Filter gauze
E. Fuel pump priming lever

Injectors: Remove injectors for cleaning. (See Page 6.)

Procedure for removal of injectors:

1. Thoroughly clean off all external dirt.
2. Disconnect and remove leak-off pipe.
3. Disconnect high pressure pipes at injector unions.
4. Slacken nuts holding down the injectors in stages, to prevent distortion.
5. Withdraw injectors carefully. Blank off inlet unions with caps. A protection sleeve should be fitted to nozzle tip.
6. Clean injector bores and remove copper washers. Plug the bores with clean rag to prevent dirt entering engine.

When replacing injectors refit copper washers — new ones if old ones were damaged — and tighten the injector down evenly. Reconnect leak-off pipe and high pressure pipes leaving the injector unions slack. Turn engine, with stop control in the "run" position and throttle lever full open, until all air is expelled from high pressure pipes, then tighten the unions. Start engine and check for any leaks.

Gearbox Filter: Drain the gearbox and transmission housing into a clean container. Cover the container and allow the oil to stand while completing the servicing operations. Remove the full flow filter housing, clean out with fuel oil and a stiff brush making sure that the wire screen is also clean and free of bits. Fit a new paper element filter and re-assemble. Refill with the original oil except for the last gallon which should be discarded with any sediment. Top up with new oil. Cleanliness is most essential as the transmission oil is used in the Selectamatic hydraulic system. Check the dirt excluders on the gear/range levers for damage and replace if necessary.

BarnerManuals.net

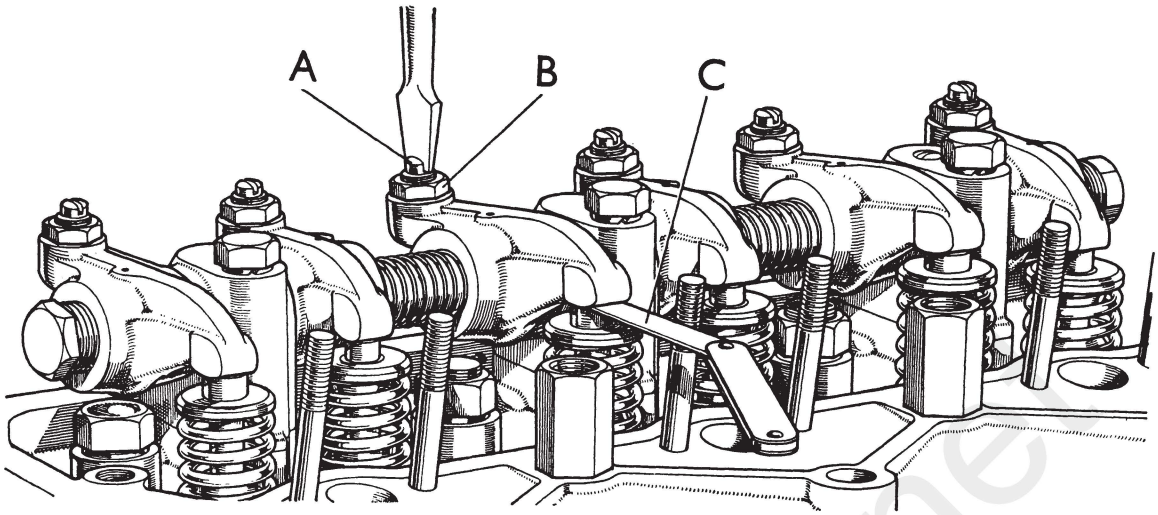

Figure 3. SETTING THE VALVE CLEARANCE

A. Adjusting screw **B.** Locknut **C.** Feeler gauge

Valve Clearance

Remove valve rocker cover and check valve clearances when engine is cold. The valve clearance should be set cold to the dimensions on Page 35, Dimensional Data. The clearance between the tip of rocker arm and the end of valve stem should be checked with a feeler gauge as shown on Fig. 3 and adjusted, if necessary, to the correct clearance. Adjustment is made by slackening the locknut and turning the adjusting screw until correct clearance is obtained. When tightening the locknut hold adjusting screw firmly with a screwdriver, then re-check the clearance. As it is important that the tappet is on the base of the cam when valve clearance is set, the valves should be adjusted in the manner described below.

Relative position of valves is as follows:

No. 1 Cylinder (Front)		**No. 2 Cylinder** (Centre)		**No. 3 Cylinder** (Rear)	
Exhaust	Inlet	Exhaust	Inlet	Exhaust	Inlet

Using a $\frac{15}{16}$ AF socket and suitable bar, turn engine slowly forward and observe which exhaust valve is closing and continue turning until the inlet valve of the same cylinder starts to open. When these two valves are open by the same amount stop turning. It is possible to turn the engine backwards and forwards to attain the correct point. This position is known as having the valves "rocking". Set the clearance of the corresponding valves and repeat the procedure on the other two cylinders.

Order of Valve Setting:

Valves Rocking	**Set Valves**
No. 1 cylinder	No. 2 inlet and No. 3 exhaust
No. 2 cylinder	No. 3 inlet and No. 1 exhaust
No. 3 cylinder	No. 1 inlet and No. 2 exhaust

Fan Belt

Check tension by deflecting belt midway between the dynamo and crankshaft pulleys. It should deflect approximately $\frac{1}{2}$ in. (12·7 mm) and if necessary may be adjusted by releasing the three dynamo mounting bolts and swinging dynamo on the two lower bolts. Tighten upper bolt first, as this will hold dynamo in position whilst the lower bolts are tightened. Do not overtighten the belt. A taut belt will place excessive load on the dynamo and water pump bearings and cause rapid belt wear. If the belt has insufficient tension when dynamo has been adjusted so that the upper mounting bolt is at end of arm slot, the belt should be renewed. (Fig. 4.)

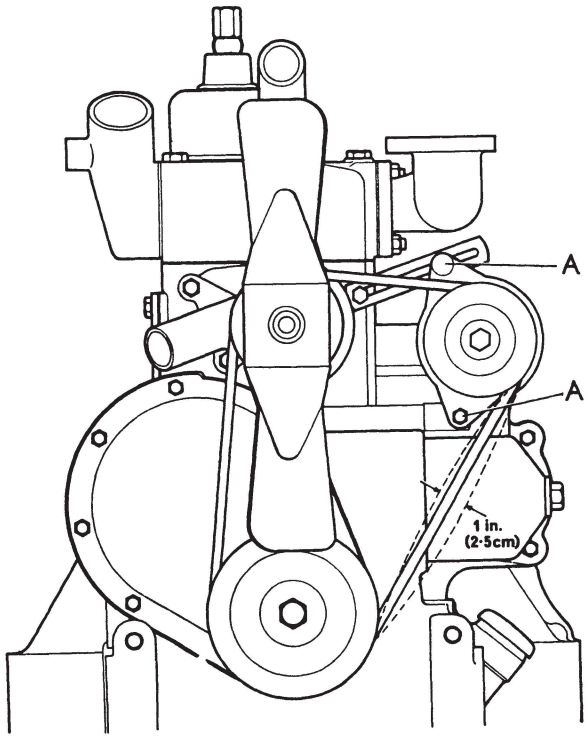

Figure 4. FAN BELT ADJUSTMENT

A. Dynamo mounting bolts

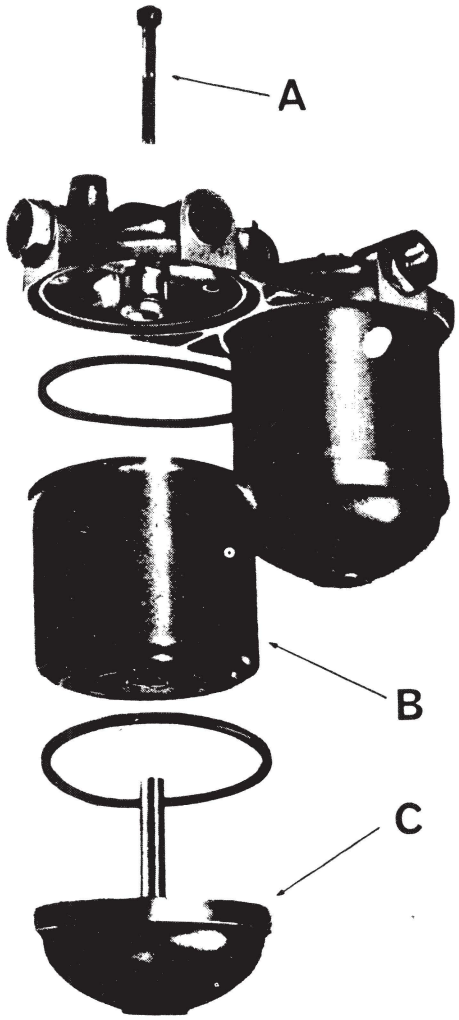

Figure 5. FUEL FILTER

A. Element securing bolt B. Element
C. Filter base

Fuel Filter

Fit a new element in the first fuel filter but do not disturb the second filter. Clean the outside of filter then remove the bolt securing base of first filter to filter head, whilst holding base and element with the other hand. Remove base and discard element. Flush out base and fit a new element, ensuring that it seats correctly on the sealing rings in base and head. Fit a new sealing washer on to the retaining bolt. Replace the bolt and tighten firmly, but not excessively.

Do not attempt to clean fuel filter elements and do not change elements from one filter to another.

Remove and flush out fuel feed pump sediment bowl. As the fuel pump is lower than the tank it will be necessary to turn fuel tap off or, if a fuel tap is not fitted, slacken outlet union on fuel tank, so that fuel will not siphon out. Clean filter gauze with an air blast, or wash in clean fuel. Replace gauze and bowl, ensuring that it seats correctly on the sealing ring. After refitting sediment bowl and tightening the tank outlet union, or turning on fuel tap, vent system to remove air. (See Page 5.) (Fig. 5.)

Water Pump

Apply high-melting-point grease sparingly to the pump grease nipple. A few strokes of the grease-gun are all that is required. Over-greasing will damage the seals and cause eventual bearing failure.

The grease nipple was deleted from the water pump body at the following engine numbers:

AD3/55A	serial number	2993 onwards
AD3/55B	serial number	3170 onwards
355011	serial number	10797 onwards
355012	serial number	1030 onwards

Dynamo

Remove small rubber plug from the centre of dynamo rear end plate, inject a few drops of engine oil through the hole and replace the plug.

Every 1000 Hours

Engine Oil Pump: Drain the oil and remove sump cover. Remove setscrews attaching inlet pipe to oil pump and remove pipe and gauze. Clean the wire gauze with diesel oil. Do not use a cloth. Refit gauze and pipe using a new gasket. It is essential that an airtight joint is obtained. Refit sump cover and plug; fill with correct oil.

Fuel Filter: Using the same procedure as in 500 hours service, fit new elements in both first and second filters. Do not attempt to clean or interchange the filter elements.

Gearbox: When hot drain the oil from the two plugs and replenish through the PTO cover with new oil. Replace full flow filter, check the dirt excluders on the gear/range levers and replace if necessary.

Final Drives: When hot drain the oil from the final drive reduction housing and refill with new oil. Check vent hole is clear.

Brakes and Clutch: Check the adjustments of the brakes and clutch.

BetterManuals.net

FUEL SYSTEM

Introduction

A thoroughly clean fuel system is essential. Too much emphasis cannot be made on this point and the necessity for correct storage of fuel, proper attention to filter renewal, cleaning the exterior of the tractor before slackening any connections on the fuel system, and care when filling the fuel tank not to allow dirt to enter, must be impressed upon the user. Cotton waste or cloths must not in any circumstances be used in conjunction with fuel injection equipment.

Every care should also be exercised in the workshop. The bench used for servicing of fuel equipment should be situated in a well-lit and separate part of the workshop. If it is possible, an insulated dustproof room should be provided in which the equipment can be permanently installed.

Some of the tools and test gear necessary for servicing injectors are shown in Category "C" Tool Leaflets. The minimum essentials consist of the following: Two Safety Containers — one filled with petrol for soaking dirty nozzles and the other filled with Shell Fusus 'A' oil, or clean diesel fuel, for assembly of the cleaned components. A nozzle bench plate should be screwed to the bench with the jig end overhanging so that an injector can be located on it while the dome nut and lockwasher are slackened or tightened. A Nozzle Setting Outfit should also be securely bolted to the bench with a suitable canister to collect the spray and protect the operator against accidental contact with the spray.

The Flushing device used in conjunction with the Nozzle Setting Outfit is essential. The Nozzle Cleaning Kit (Fig. 12) includes a probing tool but not needles; correct diameter needles can be obtained separately as required. Although the above items are an essential minimum for injector servicing, more complex apparatus or additional items are available where the volume of work makes their purchase worthwhile.

Venting the System

Venting the system is necessary to remove air, as the system cannot operate correctly if air is present. If the system is allowed to run dry, or if any components are disturbed, venting should be carried out as follows referring to Figure 6.

1. Fill tank to a minimum of 2 gallons — 9 litres of fuel.
2. Check the glass bowl and all the fuel joints for leaks.
3. Clean the outside of the filters. Remove plug G and slacken connection H. Operate the fuel pump and tighten in the order G then H, as the fuel appears at each point.
4. Slacken plug J on the injection pump, prime until all air is expelled, then tighten J. Repeat this operation with plug K.
5. Slacken connection I and prime until free from air and then retighten.
6. Slacken the high pressure pipes at the nozzle

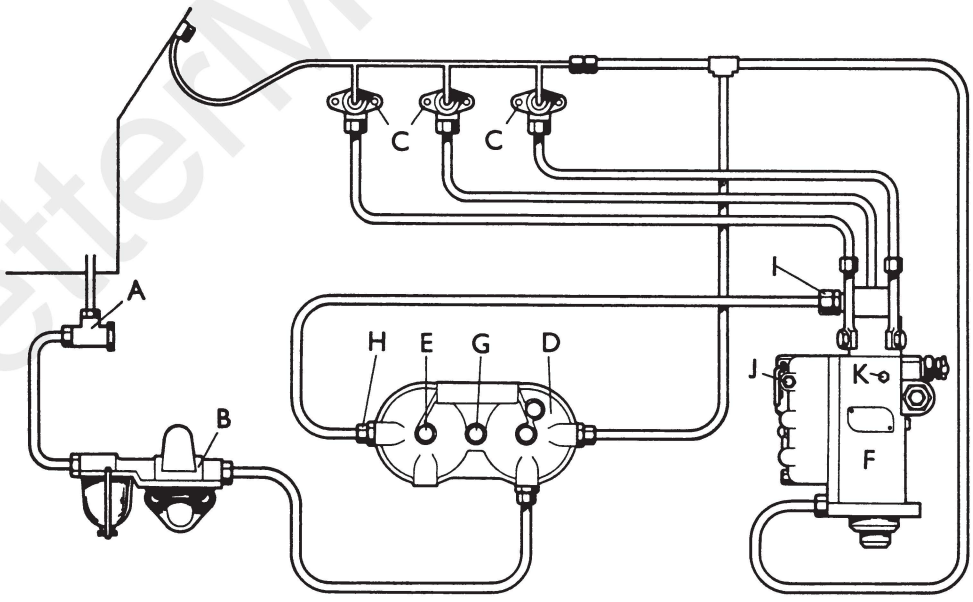

Figure 6. DIAGRAM OF FUEL SYSTEM

A. Fuel tap
B. Fuel feed pump
C. Injectors
D. First fuel filter
E. Second fuel filter
F. Injection pump
G. Filter vent plug
H. Filter outlet union
I. Pump inlet union
J. Pump vent plug
K. Pump vent plug

BetterManuals.com

end, then with the fuel cut-off lever in the run position and the throttle fully open, operate the starter until fuel is ejected. Tighten the pipe

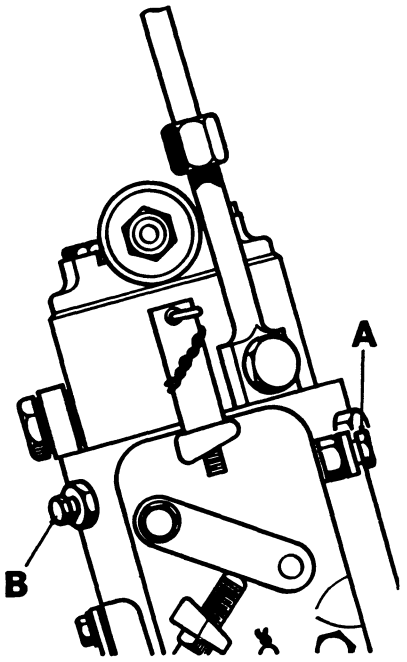

Figure 7. FUEL INJECTION PUMP VENT PLUGS

A. Governor housing vent plug
B. Pump barrel vent plug

connections and operate the starter. The engine should then start. Run for a few minutes and check all points for leaks. Dry off all fuel from joints and observe whilst the engine is running.

Fuel Feed Pump

The fuel feed pump is mounted on the right-hand side of the engine crankcase and is actuated by a push rod from an eccentric formed on the camshaft.

To remove the fuel feed pump, disconnect fuel pipes at the pump and release the two bolts securing the pump to the engine crankcase. When the pump is removed the push rod may be withdrawn from crankcase. (Fig. 8.)

Renewal of Diaphragm: Clean exterior of the pump and mark top and bottom halves so that they can be replaced in the same position. Remove six cheese-headed screws securing the upper half of the pump to the base and lift off the pump top.

Remove diaphragm complete with pull rod by turning these through an angle of 90° which should release the pull rod from the connecting link. Fit new diaphragm and pull rod over the spring with the tab in the position shown in Fig. 9. Press the centre down until the "T" of pull rod enters slot in connecting link and turn diaphragm through 90° as shown in Fig. 9 so that they lock together. The upper housing may then be replaced. Press priming lever and keep it pressed whilst the cheese-headed screws securing the housing are tightened. This ensures the diaphragm is not taut.

Injector Servicing

Nozzle Testing: The hand tester shown in Fig. 10 is adequate for testing and pressure setting injectors.

Attach the injector to the spray tester and place a canister round the nozzle to ensure that spray does not contact the body. The force of the spray is such that it will easily penetrate the skin, even through clothing. The resultant oil under the skin is very difficult to treat and can be a very uncomfortable wound. The canister will also help to condense the

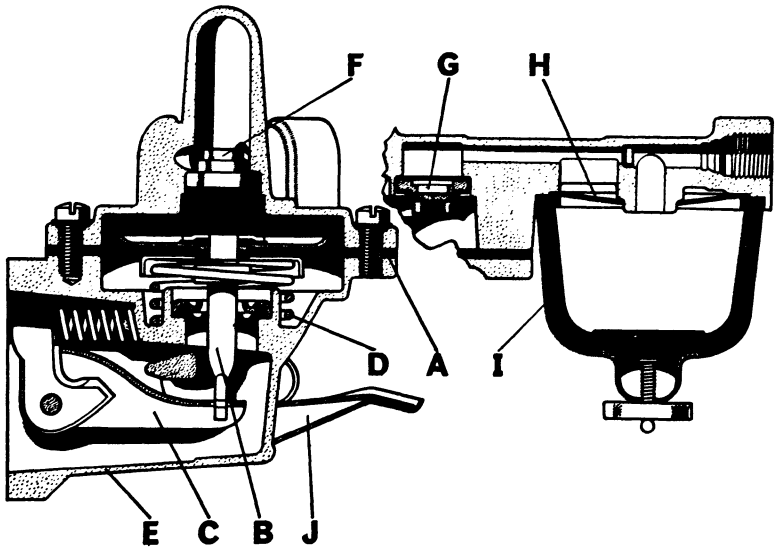

Figure 8. FUEL FEED PUMP

A. Diaphragm
B. Diaphragm push rod
C. Connecting link
D. Diaphragm spring
E. Body
F. Outlet valve
G. Inlet valve
H. Filter gauze
I. Sediment bowl
J. Hand primer

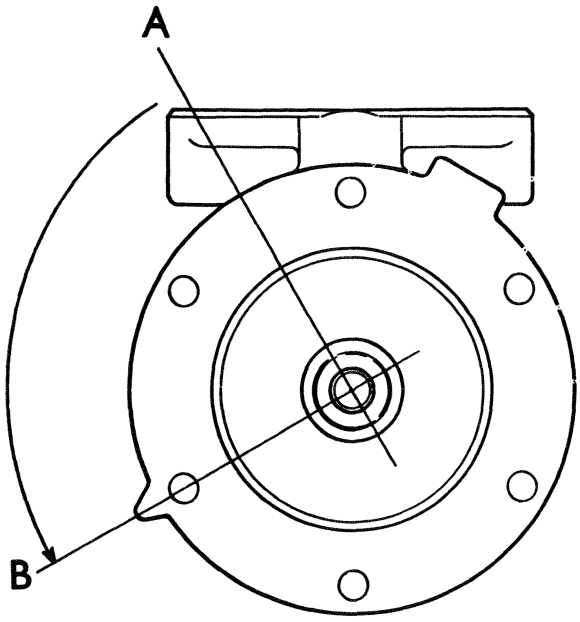

Figure 9. REFITTING FEED PUMP DIAPHRAGM

With the diaphragm tab at position A, fit the diaphragm on to the pump body until the push rod enters the link slot, then turn the diaphragm 90°, so that the tab is at position B, to lock the push rod in the link slot.

very fine spray which forms an objectionable atmosphere. If regular nozzle testing is contemplated a totally enclosed test chamber with exhauster is advocated.

Pressure Test: With injector mounted in the test outfit, depress hand lever several times to fill the injector and expel any air. Depress lever very slowly and observe highest pressure reading that is obtained before needle on pressure gauge flicks. This is the pressure at which injection takes place. The correct pressure for new injectors is 185 atmospheres, and for used injectors 175 atmospheres.

If the pressure is incorrect but the nozzle is clean and otherwise satisfactory, it should be set to the correct figure as follows: Remove dome cap and slacken locknut, and using a large screwdriver in the pressure adjusting screw D (Fig. 11) adjust the pressure. Only a very small movement will be required unless the nozzle has only just been assembled and the pressure not previously set. When the screw has been adjusted, tighten locknut and recheck pressure.

Back Leakage Test: Operate hand pump until pressure is about 170 atmospheres. Release the handle quickly and measure, with a stop-watch, the time taken between pressure gauge pointer passing the marks for 150 and 100 atmospheres as it gradually falls. For a satisfactory nozzle the time taken should be between 6 and 25 seconds.

Dry Seat Test: Carefully wipe nozzle dry. Build up pressure to 10 atmospheres below the injection pressure. Examine nozzle whilst under this pressure. It should be dry and free from leakage. If the nozzle is inadvertently caused to inject, the tip should be re-wiped dry and tested again.

Atomisation Test: Isolate pressure gauge by closing valve. Apply eight quick jerks and examine the spray quality. The sprays should be free from coarse or solid streaks and the tip should remain dry. There should be four sprays equally spaced at an inclusive angle of 140°. They are offset 10° to allow for the tilt of the injector in the cylinder head.

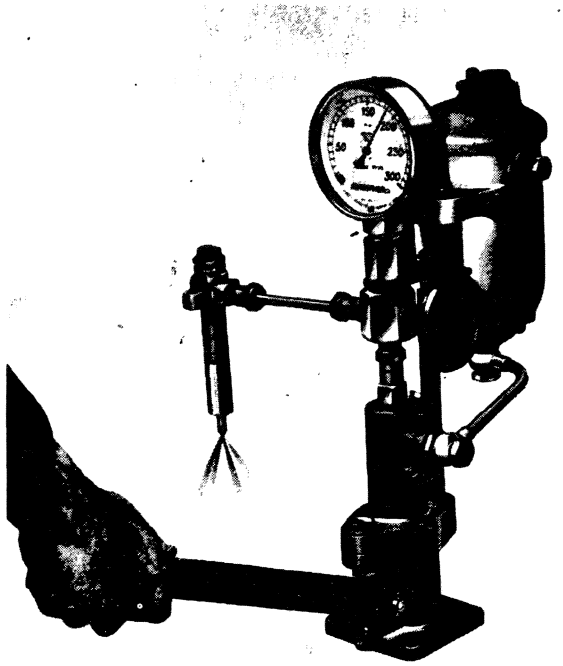

Figure 10. INJECTOR TESTING

Using Service Tool 7044/122FF

Examine injector for signs of leakage at nozzle cap nut, spring adjusting nut, and copper sealing washers.

Nozzle Cleaning: If the injector fails to pass any of the above tests it must be dismantled, cleaned and retested. Note that spring pressure must be released before removing a nozzle. Unscrew the nozzle cap (Fig. 11), using a close-fitting spanner on the flats provided, and remove nozzle, noting that it will only fit in one position because of the locating dowels. Remove needle valve and place in petrol to soften the carbon. Examine nozzle and needle for damage, overheating or scratch marks on the lapped working surfaces. If excessive overheating has occurred, denoted by a dark blue colour of the needle, or if the seat or working surfaces are damaged, reconditioning will be required and a new nozzle should be fitted.

If the nozzle is not damaged it should be cleaned using the special tools provided in the nozzle cleaning kit shown in Fig. 12 and Tool Leaflet C2. Firstly clean fuel oil channels and bores in the nozzle. Scrape carbon from valve seat with the brass scraper.

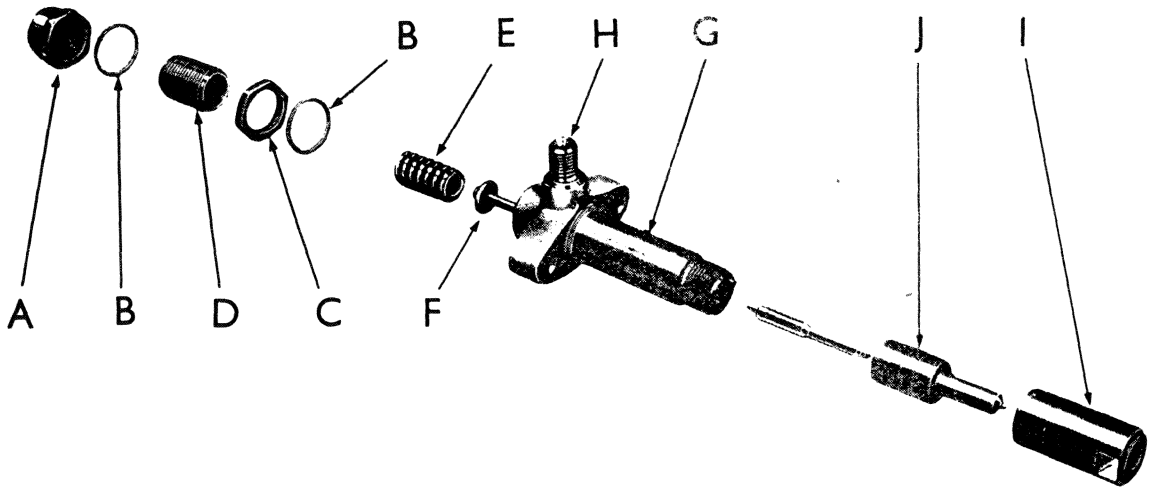

Figure 11. EXPLODED INJECTOR

A. Cap **B.** Sealing washer **C.** Locknut **D.** Adjusting screw
E. Spring **F.** Plunger **G.** Holder **H.** Fuel inlet connection
I. Nozzle nut **J.** Nozzle

Using the special groove scraper clear carbon deposits from oil gallery. Clean spray holes with probing tool fitted with a probing wire of the correct diameter.

If a wire is broken off in the hole it is often impossible to remove it, and the nozzle is then useless. Great care should be exercised when using the probing wires. After clearing the holes scrape carbon from valve seat with the V-tipped brass tool. Next use the tool with the thin blade radiused at its tip to clean carbon out of the sac. After cleaning with the tools, the nozzle should be thoroughly cleaned with fuel. This should be done by placing the nozzle, without needle, in the reverse flushing attachment and connecting to the nozzle pressure tester in place of an injector. Operation of the tester will then thoroughly flush all particles of loose carbon from the nozzle.

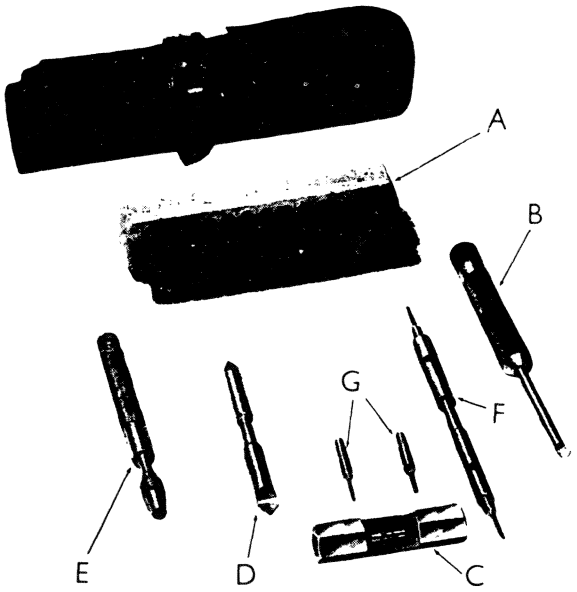

Figure 12. C.A.V. NOZZLE CLEANING KIT

A. Brass wire brush **B.** Nozzle body groove scraper
C. Nozzle plunger cleaner **D.** Nozzle body seat scraper
E. Holder—probing needle **F.** *Pintle hole cleaner
G. *Probes—pintle hole cleaner

* Not required for D.B. nozzles.

With the brass wire brush, gently clean needle valve, paying particular attention to valve seat and needle tip. Brush carbon from nozzle stem and tip.

Reassembly: The needle valve should be fitted to nozzle whilst both are under the surface of clean fuel oil or Fusus oil. Only in this way can dust be excluded from assembly. The needle should slide smoothly in the nozzle and this should be tried several times whilst under the surface of fluid. Needle and nozzle are assembled as a pair and under no account should they be interchanged.

The nozzle should then be assembled on to injector body. In order to avoid distorting needle or plunger the pressure on pressure spring should be released. Remove dome cap, slacken locknut and slacken pressure adjusting screw right back until there is no pressure on spring. Make sure that mating surfaces between nozzle and injector body are perfectly clean. Place nozzle on body with the dowels in correct engagement so that the two faces are in perfect contact, i.e., not held apart by spring pressure. Place the cap over nozzle and tighten adequately but not overtight. Retighten pressure adjusting screw and reset the pressure on spray tester. Test the spray, leak back, etc. If the injector is not required for immediate use it should be stored in a sealed plastic bag or similar container. (Fig. 13.)

It is essential that the copper washer be used under injector when refitting to engine. Check that the seat in head is clean and that the old washer has not been left in the recess. The use of two washers will raise nozzle tip so that the spray impinges on cylinder head. This causes a loss of efficiency and excessive exhaust smoke.

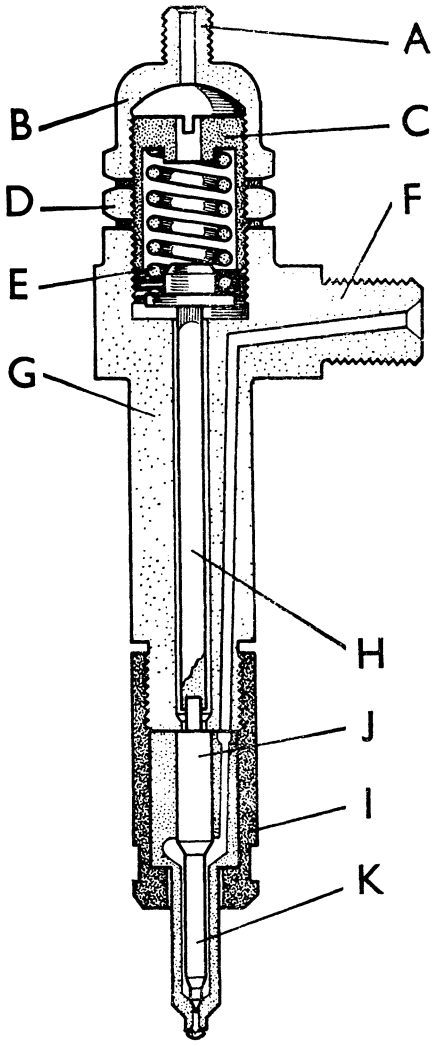

Figure 13. SECTIONED INJECTOR

A. Leak-off connection **B.** Cap **C.** Adjusting screw
D. Locknut **E.** Spring **F.** Fuel inlet connection
G. Holder **H.** Plunger **I.** Nozzle nut
J. Needle **K.** Nozzle

Injection Pump

The injection pump is attached by three studs on the pump drive housing, and the pump mounting holes are slotted to permit pump body to be turned for injection timing adjustment. To assist in obtaining the correct timing position the pump flange is marked with a groove and when the timing is set during assembly a mark is made on the carrier flange in line with the mark on pump. Any pump can thus be fitted and the original timing obtained by placing the two marks in alignment. (See Fig. 14.)

The pump is driven from camshaft through a skew gear. (This gear also drives the oil pump, which lies directly beneath the injection pump.) Thus, timing of pump depends on the timing of camshaft and pump drive.

Removing the Pump

1. Disconnect all fuel pipes from pump.
2. Disconnect throttle and stop control cables from pump.
3. Check that timing mark on pump drive housing is visible. If not, scribe a new line in line with the mark on pump.
4. Unscrew holding-down nuts on pump flange.
5. Lift pump away from housing. The quill shaft will probably remain in the housing, supported by oil pump drive shaft.

Refitting the Pump

1. Before fitting pump it is advisable to check the timing of camshaft and pump drive assembly. The timing procedure is given on Page 31 and if the timing is correct the quill shaft master spline will be at 6 o'clock (looking from the side of the engine) when No. 1 piston is at the static timing position, i.e., the locating peg in the SP position in flywheel housing.
2. Check that quill shaft is fitted with chamfered edge upwards: this ensures that pump can be lowered on to drive housing without difficulty.

2a The pump shaft has been counter bored to accommodate a thrust spring between the quill shaft and the pump shaft. It was introduced at the following engine numbers:

AD3/55A	serial number	15403	onwards
AD3/55B	serial number	2551	onwards
AD3/49A	serial number	7026	onwards
AD3/49B	serial number	1595	onwards
355011	serial number	1873	onwards

3. Fit pump to housing.
4. Rotate pump body until timing marks line up (see Fig. 14) and tighten the three holding nuts.
5. Reconnect all fuel pipes and control cables.

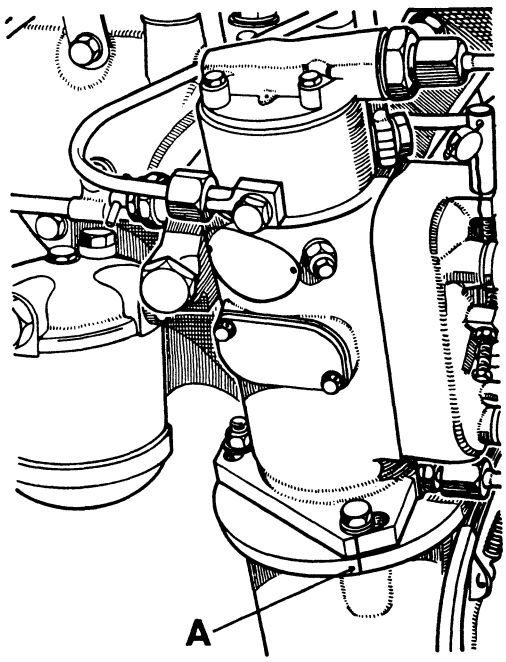

Figure 14. INJECTION PUMP TIMING MARKS

A. Pump body mark aligned with engine flange

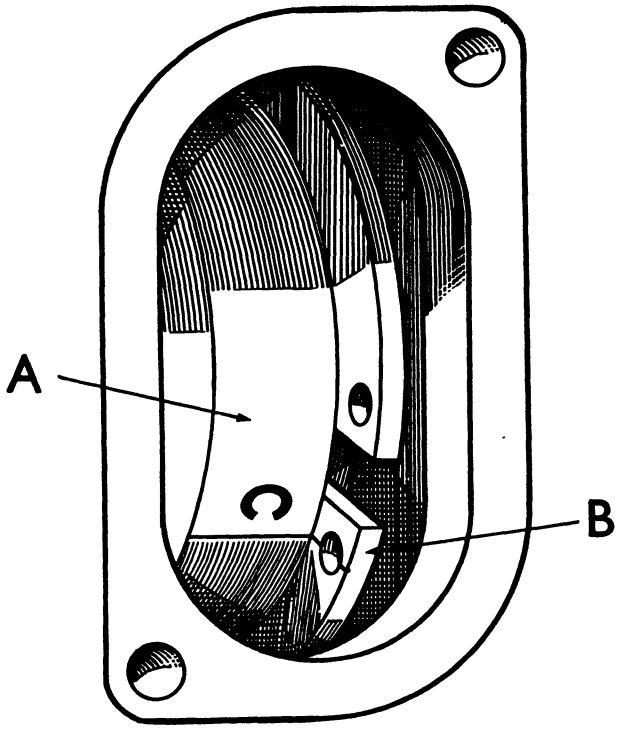

Figure 15. SETTING THE INJECTION PUMP

A. Rotor B. Circlip

Retiming the Injection Pump

If either the timing line on pump or the one on drive housing flange becomes obliterated then the pump will have to be retimed to the engine as follows:

1. Connect No. 1 outlet to an injector tester and pressurise to about 30 atmospheres.
2. Turn pump rotor in direction of rotation until it becomes rigid.
3. Remove side cover plate and move circlip round until one edge of it lines up with "C" mark on the rotor. (See Fig. 15). This can easily be done with a screwdriver.
4. Set crankshaft in static timing position for No. 1 cylinder, i.e., the peg located in the SP position in flywheel housing.
5. Lower pump on to drive housing and fit the holding nuts and washers; leave slack to allow rotation of pump body.
6. Turn pump body fully anti-clockwise and then slowly rotate it clockwise until the circlip edge again lines up with rotor "C" mark. This final movement is in the opposite direction to rotation of the pump so that backlash in the gears and quill shaft is taken up. If the circlip goes past the rotor "C" mark, the pump body should be turned fully anti-clockwise and lined up again.
7. Tighten pump fixing nuts and refit side cover plate.
8. Scribe marks on pump flange and drive housing for future use.

Fuel Setting

Once the fuel setting has been set for an engine it is most unlikely that it requires adjustment. If adjustment is required then the pump should be removed from the engine and tested for delivery on a Hartridge Test Bench. There is no reliable way of judging fuel delivery on the engine unless it can be tested on a dynomometer and consumption measured at full load. For details of injection pump fuel setting see Page 36.

Injection Pump Controls

The bottom lever on injection pump operates the fuel cut-off to stop the engine. The top lever operates the governor to give required engine speed and is fitted with two adjustable stops. The bottom stop is for setting idling speed and this should be set so that the engine runs at 650–700 rev/min with throttle lever in shut-off position. The top stop is for setting maximum speed and should be set at: 2150 rev/min no load to give 2000 rev/min full load (AD3/49 A and B and AD3/30 A and B), 2350 rev/min no load to give 2200 rev/min full load (AD3/55 A and B and AD3/40 A and B).

Fuel Filters

The double fuel filter mounted on the right-hand side of the engine contains two replaceable paper elements. These are connected in series, so that all fuel must pass through both elements before it is fed to the injection pump. Always wipe the outside of filter clean before removing the elements and fit new elements at the time specified on Page 4. New elements should also be fitted whenever a new, or reconditioned, fuel injection pump is fitted. Do not attempt to clean elements and do not change elements from one filter to another.

Fuel Tank Removal

The easiest way of removing the fuel tank is to remove the tank complete with instrument panel, then remove instrument panel from tank.

First drain tank by unscrewing union nut on fuel tap outlet and allowing fuel to flow by gravity into a suitable, clean container. If tractor is not fitted with a fuel tap, remove union from fuel feed pump inlet and allow the fuel to siphon through pipe into a suitable, clean container. Do not release the union at the tank end of pipe as this will allow air into pipe and prevent the siphon action from taking place. Disconnect tractormeter drive cable and wiring. Some of the wires are fitted with snap connectors, but others, such as oil warning switch wire, will have to be disconnected at their terminals.

Remove fuel tank strap, unscrew fuel outlet and leak-off pipes from tank and lift tank assembly from its support.

Replace the tank in reverse order of removal ensuring that seating pads are in position and wires are replaced in their correct connectors.

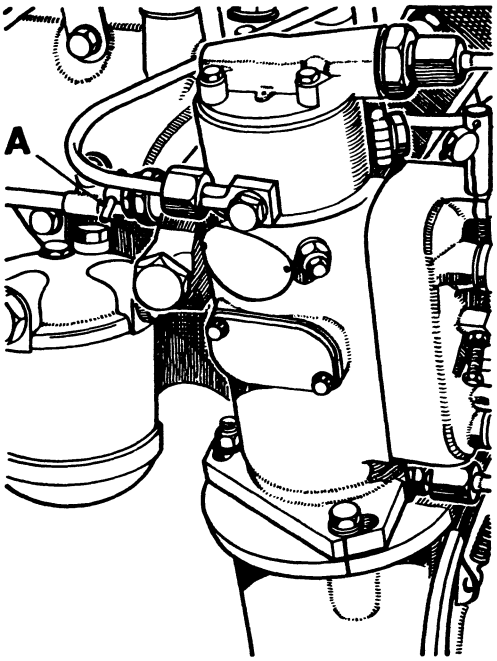

Figure 16. INJECTION PUMP RETARD CONTROL

A. Wing nut

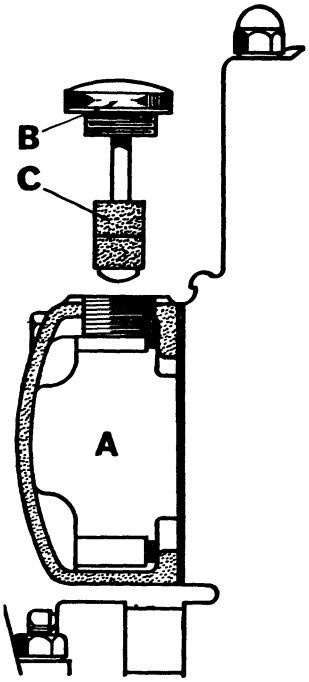

Figure 17. ETHER STARTING PLUG

A. Inlet manifold B. Plug C. Felt pad

STARTING AIDS

For use in cold weather

Manual retard device on injection pump: The wing-nut on the side of pump should be screwed in **before** trying to start engine. As soon as engine is running the wing-nut must be screwed out, otherwise erratic running with black exhaust smoke and loss of power will occur. Do not screw manual retard nut in immediately after an unsuccessful attempt to start engine. If you attempt to start engine prior to screwing in manual retard, wait 15 to 20 seconds to allow pressure inside pump to fall; otherwise pump will be locked in the advanced position and engine will not start. It is advisable to screw the wing-nut in **before** attempting to start engine. (Fig. 16.)

For use in sub-zero temperatures

Ether plug: In the inlet manifold there is a plastic plug with a felt pad on the end of it. Unscrew plug and dip felt pad into ether or a proprietary starting fluid, replace plug in manifold and start engine immediately. (Fig. 17.)

Warning

Serious damage can be caused to an engine by the use of an excessive amount of ether. The plug should be removed, the felt soaked in ether and then replaced. **Ether in excess of the quantity absorbed by the felt must not be added.**

It must be noted that other aids do exist, namely that correct oil should be used (see Page 44) and the battery should be kept charged by running the engine for adequate periods of time.

Thermostart

This is available on tractors which operate in very cold climates and consists of an igniter unit screwed into the inlet manifold and fed by fuel from engine leak-off pipe.

To start an engine fitted with a thermostart

1. Place engine stop control in "run" position and hand-throttle lever "fully open" when cold.
2. Screw in the wing nut underneath the fuel pump. (Manual retard.)
3. Turn the starter switch key 60° clockwise and hold in this position for 10-15 seconds (this will supply current to heat the unit sufficiently to vaporise fuel).
4. Depress clutch pedal and switch key a further 30° clockwise (this will continue supplying current to the unit and also operate the starter motor), air drawn through manifold will then mix with vapourised fuel and be ignited, to fill engine cylinders with warm air.
5. If the engine does not start after 15 seconds, return key to "heat" position for 5 seconds then re-engage starter.
6. As soon as the engine starts, release key and allow it to return to "run" position (30° clockwise from "off" position).
7. When starting a warm engine, turn key 90° clockwise to operate starter in normal way.

Note

When starting the engine the starter must not be engaged for more than 25 seconds otherwise the battery will become overheated. Short attempts will be of no avail.

LUBRICATION SYSTEM

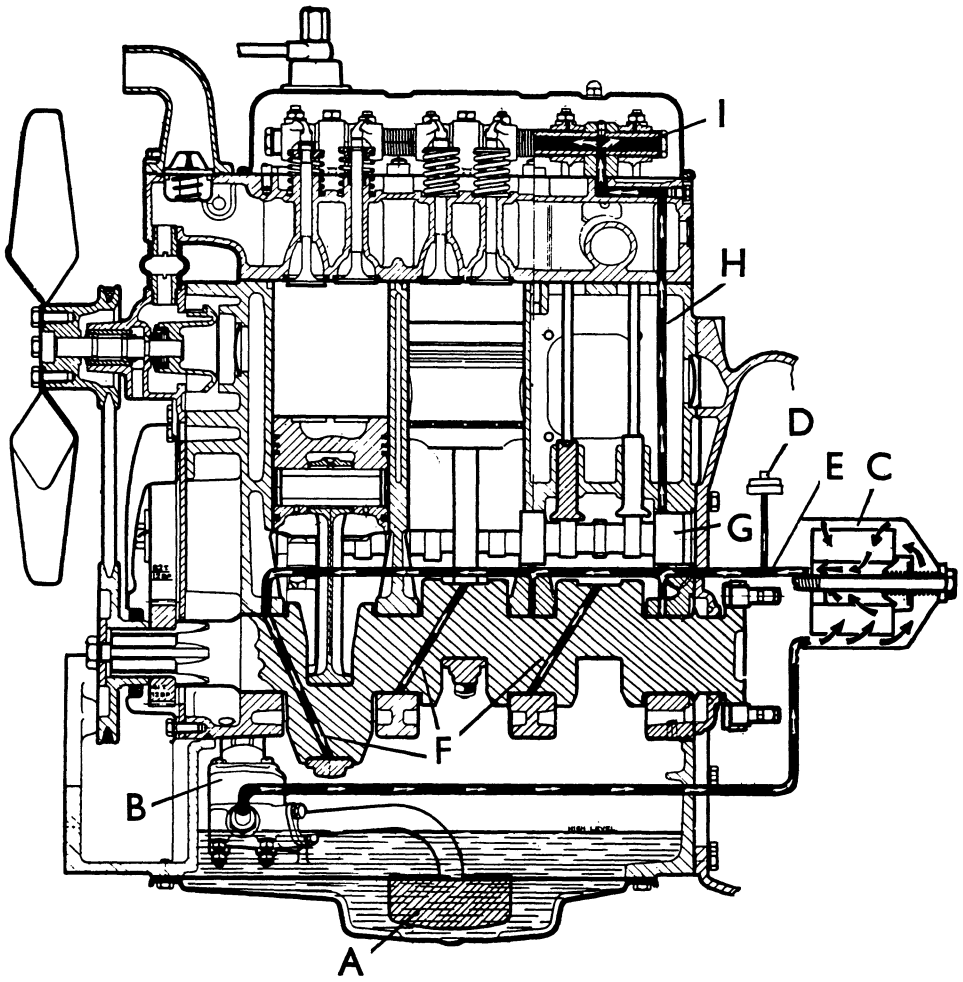

Figure 18. DIAGRAM OF LUBRICATION SYSTEM

A. Inlet gauze **B.** Oil pump **C.** Filter **D.** Warning light switch
E. Oil gallery **F.** Crankshaft oil passage **G.** Camshaft rear bearing
H. Valve gear feed **I.** Rocker shaft

Engine Lubrication

Oil is drawn from the sump by the gear-driven rotary oil pump and delivered under pressure to the oil filter. After filtration the oil passes to the main oil gallery in the cylinder block and so, via oilways in the block webs, to the crankshaft main journals and then on, through further oilways in the cylinder block, to pressure lubricate the camshaft bearings. The big-end bearings are lubricated by drillings in the crankshaft webs.

The rocker shaft and valve rockers are intermittently fed with oil from the camshaft rear bearing through oilways in block and head and an external connecting pipe. The camshaft is drilled off-centre so that the oilways are connected only once in each revolution. (See Fig. 19.) The oil lubricates the tappets and push rods as it runs back to the sump. There is a central oilway along the camshaft up to No. 3 bearing, so that oil from this bearing can lubricate Nos. 1 and 2 bearings. The locating housing for the front bearing is drilled to feed oil on to the fuel pump drive gears. Splash from these gears lubricates the bearings in the pump drive housing, and oil leakage from the front of the bearing lubricates the timing gears by splash.

A full-flow oil filter is mounted on the left-hand side of the cylinder block. The filter incorporates a by-pass valve so that if the pressure difference between the filter inlet and outlet exceeds 10 lb/sq in. the valve opens and allows oil to by-pass the element and flow straight into the oil gallery. The engine is not, therefore, starved of oil if the element is allowed to become choked, but it is supplied with unfiltered oil. The replaceable paper element should be renewed at the intervals specified on Page 1. A new element should also be fitted when an engine is overhauled and also if a cylinder head gasket fails

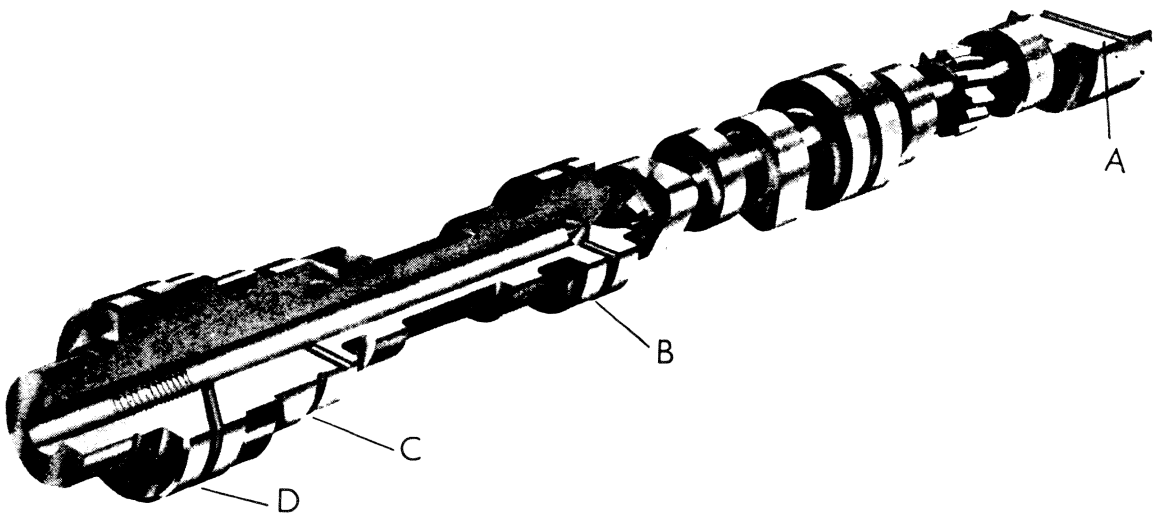

Figure 19. CAMSHAFT OILWAYS

A. Cross drilling for feed to valve gear
B. Oil feed into camshaft
C. Feed to No. 2 bearing
D. Feed to front bearing

If engine oil and filter element are not changed when a failed cylinder head gasket is replaced, any water which has leaked into sump will cause the paper filter element to swell and fail to pass oil. (Fig. 20.)

Do not attempt to clean a filter element.

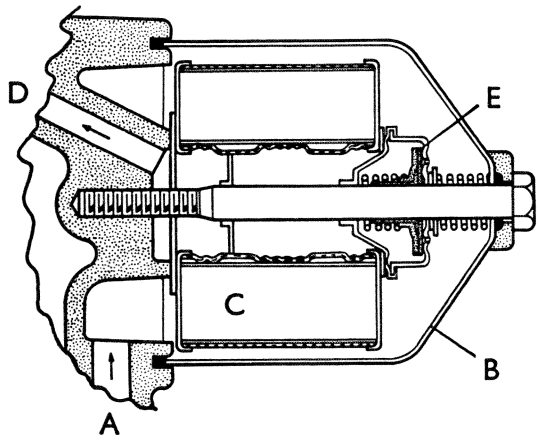

Figure 20. SECTION THROUGH OIL FILTER

A. Oil feed from pump
B. Bowl
C. Element
D. Outlet to oil gallery
E. By-pass valve

Oil Warning Light

The oil warning light on the instrument panel is earthed by a switch in the cylinder block and when the switch opens the light is extinguished. The switch is connected into the main oil gallery and should open at 9 to 13 lb/sq. in. (0·6 to 0·9 kg/sq cm) but if not, it must be replaced because no adjustment is possible. If incorrect oil pressure is suspected the oil switch can be removed and a pressure gauge connected into the cylinder block, which is threaded $\frac{1}{8}$ BSP, so that the actual oil pressure will be shown when the engine is started.

Oil Pump

The gear type oil pump is located in the engine sump and contains a relief valve which is set to open at 40 lb/sq. in. (2·8 kg/sq cm).

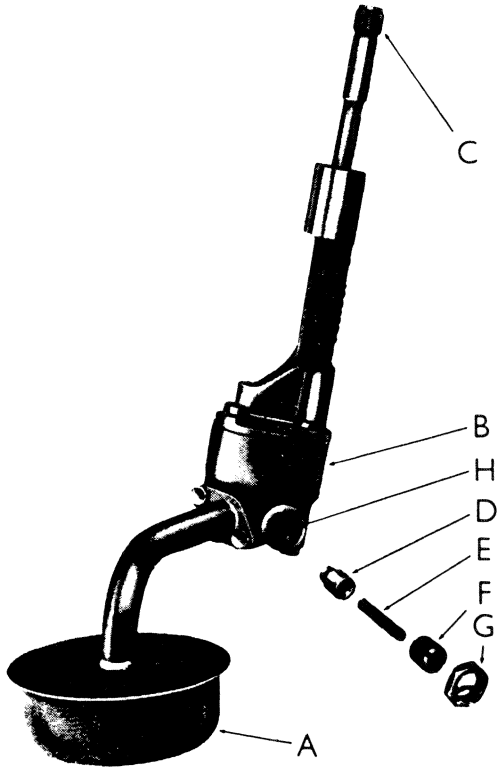

Figure 21. LUBRICATING OIL PUMP

A. Oil inlet gauze
B. Pump body
C. Driveshaft
D. Relief valve plunger
E. Spring
F. Adjusting screw
G. Locknut
H. Oil outlet connection

To Remove the Pump

1. Drain engine oil and remove sump.
2. Disconnect outlet pipe from pump to cylinder block.
3. Release locknut and remove pump locating screw, which is situated on the side of block just below pump drive housing, and withdraw pump downwards taking care to catch injection pump quill shaft, which may fall out as oil pump is withdrawn.

The oil pump must be dismantled to check gear wear, gear end-float, and the condition of the upper bearing.

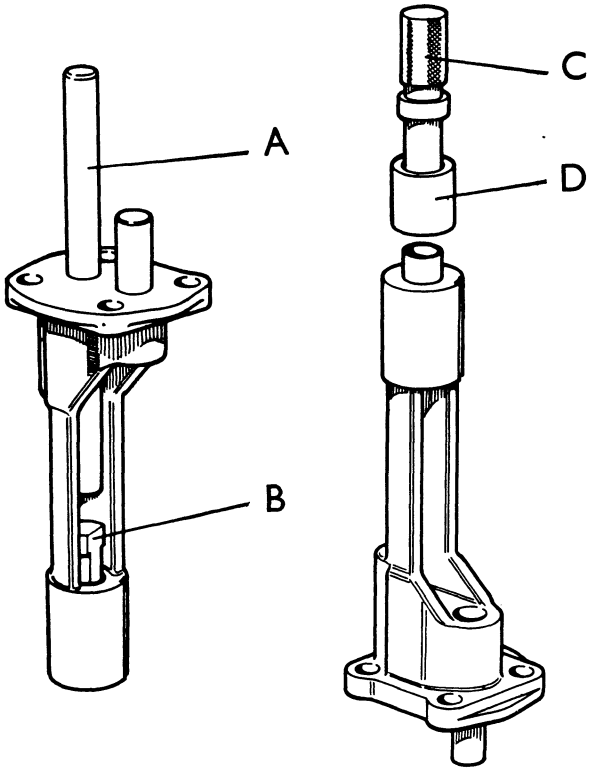

Figure 22. REPLACING OIL PUMP BRACKET BUSH
(Using Service Tool 901701)

A. Long drift **B.** Pilot **C.** Replacer drift **D.** Centraliser guide

To Dismantle Pump

1. Remove the two setscrews and two bolts securing pump cover, noting that the two bolts are special locating bolts and must be fitted in their correct places when re-assembling.
2. Remove cover, complete with relief valve, and filter.
3. Check backlash between gears — this should be 0·020 to 0·026 in. (0·51to 0·66 mm).
4. Remove driven gear and shaft.
5. Use a drift to force driving shaft from driving gear.
6. Check rotor and housing dimensions.
   Rotor width: 1·1865 – 1·1855 in. (30·13 – 30·11 mm).
   Housing depth: 1·1890 – 1·1875 in. (30·20 – 30·16 mm).
   Rotor side clearance: 0·001 – 0·0035 in. (0·025 – 0·089 mm).
   If end-float is excessive but backlash is within limits and the gears are not worn, it is permissible to grind the face of the housing to reduce end-float. If the gears are damaged, both gears should be replaced. Never replace one gear only.
7. Check the upper bearing for wear.
   Bush internal diameter: 0·4905 – 0·4925 in. (12·46 – 12·51 mm).
   Shaft diameter: 0·4895 – 0·490 in. (12·43 – 12·45 mm).
   Clearance: 0·0005 – 0·003 in. (0·02 – 0·08 mm).

If wear is excessive, remove the bush and replace using Service Tool 901701 as detailed below:

1. Slip special pilot bush B through slot in pump bracket to locate in drive shaft bush.
2. Stand pump bracket on a suitable hollow anvil or press base.
3. Place drift A in position.
4. Drive or press out pump bracket bush.

To replace the new bush:

1. Place new bush on the replacer drift C.
2. Push centraliser D over new bush and drift C until oil-hole in bush just shows at bottom edge of centraliser.
3. Start new bush in pump bracket and slide centraliser D up to pump bracket.
4. Stand the pump bracket on a flat anvil or press base; drive or press C until it butts firmly against D. The bush is now in its correct position in pump bracket. The driven rotor shaft may be removed using drift A.

Relief Valve

If the valve is to be removed for cleaning purposes take note how many threads are showing above the locknut before removal. This is necessary so that the valve may be set in its original setting if a test rig is not available.

Approximate figures to use as a guide when setting the valve are: four threads showing above locknut give approximately 40 lb/in²; one full turn produces a 6 lb/in² variation in pressure.

To check the pressure, the oil pressure warning switch should be removed and a gauge fitted into the $\frac{1}{8}$ BSP hole in the cylinder block.

If a test rig is available the following procedure should be adopted:

1. Use Shell Fortisal 5W at room temperature of 20°C (68°F) or 20/20W at 46°C (115°F), which is equivalent to hot engine oil.

2. Pump to be driven at 750 rev/min or 330 rev/min.
3. Relief valve set to open at 40 lb/sq. in. (2·8 kg/sq. cm).
4. Pump flow at 20 lb/sq. in. should be 19·2 pints/min (10·9 litres/min) at 750 rev/min and 8·4 pints/min (4·7 litres/min) at 330 rev/min. Delivery in pints/min $= \frac{480}{\text{time in seconds for one gallon to flow.}}$

Maximum time for one gallon should be:

25 seconds at 750 rev/min.

57 seconds at 330 rev/min.

To Replace the Pump

Reverse the removal procedure. Coat the locating screw with Wellseal, or a similar jointing compound, screw tightly into the cylinder block then tighten locknut.

To replace quill shaft the fuel injection pump must be removed. (See Page 9, Fuel System.) After replacing quill shaft, refit injection pump, ensuring that timing marks on the pump body and drive housing are aligned. (See Fig. 14).

Oil Warning Light

The green oil warning light on the instrument panel is earthed by a switch in the cylinder block and when the switch opens the light is extinguished.

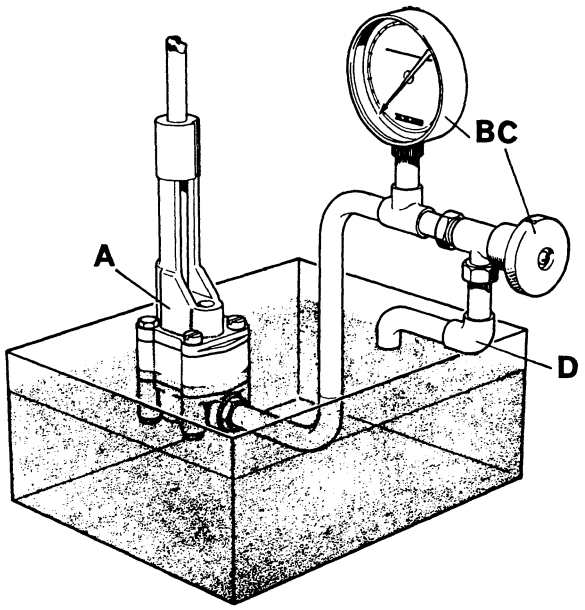

Figure 23. OIL PUMP TEST RIG

A. Oil pump **B.** Pressure gauge **C.** Shut-off valve **D.** Swivelling outlet

The switch is connected into the main oil gallery and should open at 9 to 13 lb/in² (0·6 to 0·9 kg/cm²) but if not it must be replaced as the switch is not adjustable. If incorrect oil pressure is suspected the oil switch can be removed and a pressure gauge connected into the cylinder block, which is threaded $\frac{1}{8}$ BSP, so that the actual oil pressure will be shown when the engine is started.

COOLING SYSTEM

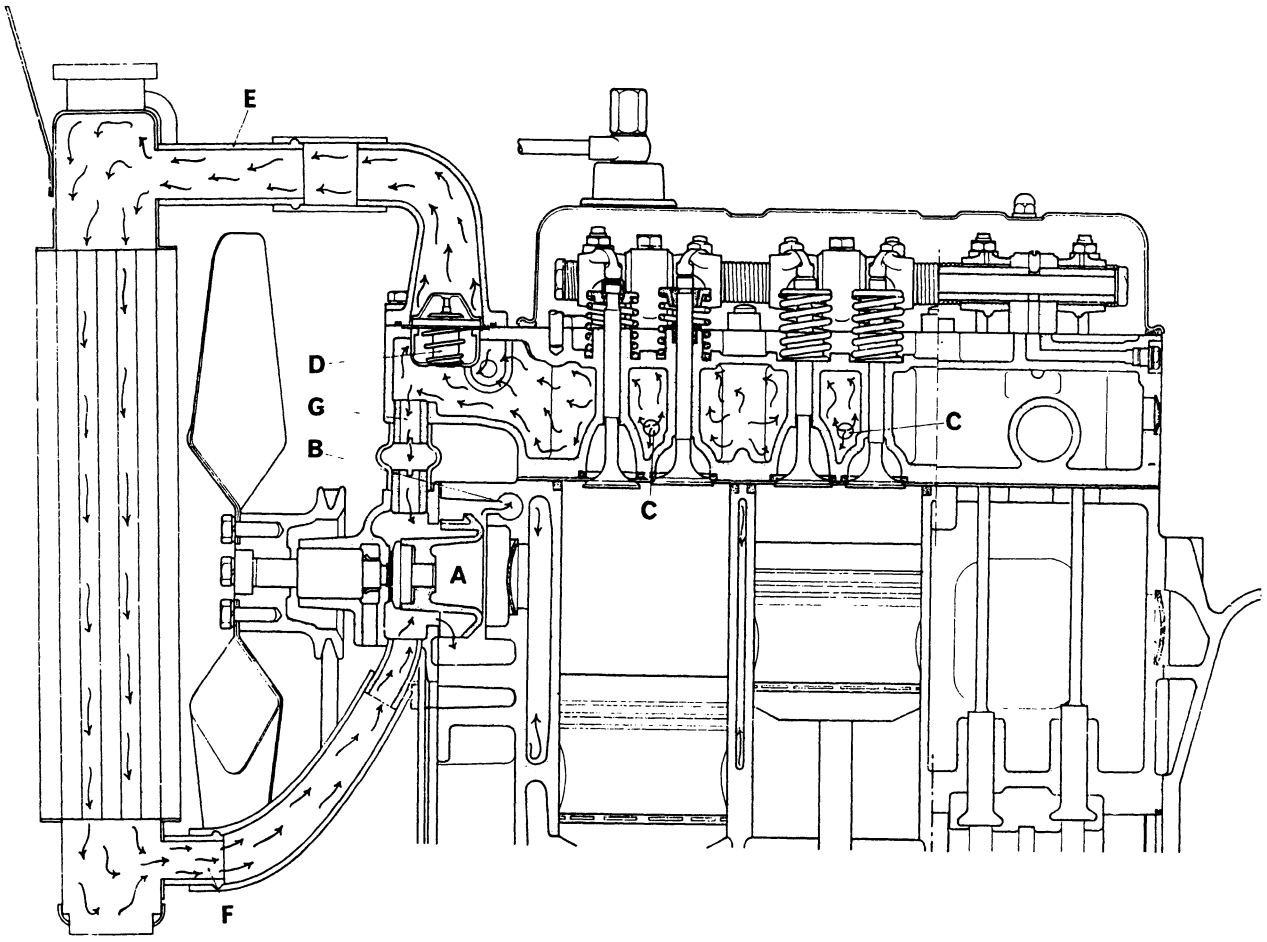

Figure 24. DIAGRAM OF COOLING SYSTEM

A. Pump impeller **B.** Passage into cylinder head **C.** Jets on to valve ports **D.** Thermostat
E. Radiator inlet **F.** Radiator outlet **G.** By-pass connection

Path of Water

Cold water is drawn into the water pump from the bottom of the radiator and is then pumped through a passage in the cylinder block to the cylinder head, where it is directed, in the form of jets, on to the injector bosses and integral valve guides. The water is able to pass, by thermo-siphon, into the block through the mating passages in the cylinder head and block to cool the cylinders. The hot water returns from the head to the top of the radiator through a thermostat which is only fully open when the engine reaches its working temperature.

When the thermostat is closed the water passing out of the cylinder head cannot pass into the radiator and therefore circulates through the by-pass into the inlet side of the water pump, thus ensuring that working temperature is reached as quickly as possible.

The system is pressurised by a spring plunger in the radiator cap, which allows steam to escape through the overflow pipe if the pressure exceeds 4 lb/sq. in. (0·28 kg/sq. cm).

The fan is mounted on the same spindle as the water impeller and is driven by a 'V' belt from the crankshaft at 1½ times engine speed. (Fig. 24.)

Removal of Water Pump

This operation can be accomplished, without removing the radiator, in the following manner:

1. Drain the water from radiator and cylinder block.
2. Remove waste pipe from radiator to pump.
3. Remove fan belt.
4. Remove fan blades (ensuring that they are marked in such a way that they can be refitted in the same position, thus safeguarding against the possibility of them getting out of balance).
5. Slacken clip securing by-pass hose. Unscrew the five bolts fixing pump to cylinder block and remove pump.

The grease nipple was deleted on water pumps fitted to later engines (see Water Pump, Page 4).

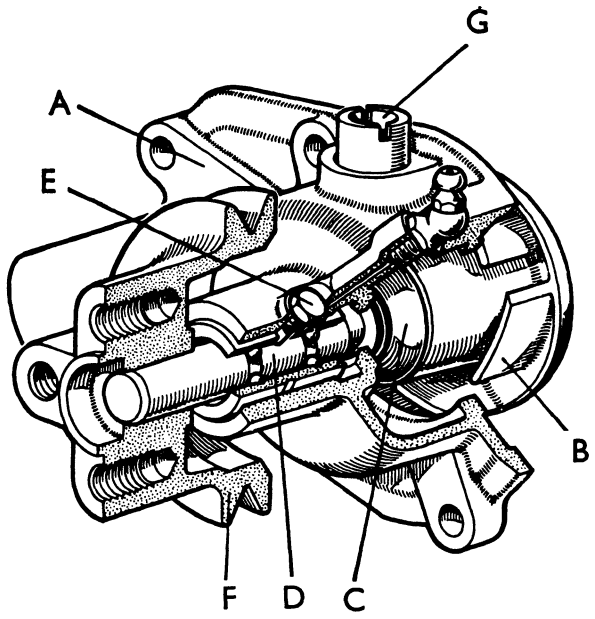

Figure 25. ARRANGEMENT OF WATER PUMP

A. Body **B.** Impeller **C.** Gland seal
D. Bearing and shaft **E.** Bearing locating screw
F. Pulley **G.** By-pass connection

Fitting a New Seal or Bearing

Remove bearing location screw E (Fig. 25) from pump body. Place pump, impeller upwards, on the bed of a press and suitably support it with packing. Press spindle and bearing assembly out, taking care not to damage impeller or pump body.

After spindle and bearing assembly has been removed the impeller may be lifted out and the seal prised out of end of impeller. The seal is supplied as a self-contained assembly and no attempt should be made to dismantle it. A new seal should be carefully pressed into impeller bore using a little Pressoline No. 2 compound (one part Pressoline to three parts water) as a lubricant. Press the seal in until the shoulder touches the end of the impeller, taking care not to cut or damage the seal. Coat the contact face of the seal with anti-scuffing paste to prevent the seal sticking to the pump body.

Examine the spindle and bearing assembly and, if this is to be renewed, remove pulley with a suitable extractor or press.

Reassembly of Water Pump

When refitting spindle and bearing assembly ensure that the hole in bearing shell is aligned with locating screw in pump body. The fan pulley and impeller should be pressed on to spindle so that the ends of spindle are flush with the ends of appropriate bores in pulley and impeller.

Before replacing water pump, check the condition of by-pass hose; if this is at all suspect it is advisable to renew it, as renewal is more difficult when both pump and cylinder head are in place.

A new gasket should always be used when refitting the pump and plain washers fitted on the fan blade setscrews, to avoid any possibility of blade failure due to fatigue.

Thermostat

To test the thermostat, remove it and place it in cold water together with an accurate thermometer. Heat the water and as the temperature rises note at what stage the thermostat begins to open. This should be at between 174°F and 183°F (79°C – 84°C). At 200°F (94°C) it should be fully open.

On the base of the thermostat the figure 180 signifies the temperature at which it should start to open.

REPAIR OPERATIONS

Engine Tune

1. **Compression:** To check the compression use a Test Gauge such as is shown in the Service Tools List. Remove all injectors and, using the correct length of extension, fit the gauge into No. 1 injector bore. Tighten down with injector nuts to give an airtight seal and with the stop control in the "stop" position turn engine with starter. It is advisable to use a fully charged battery. Note the compression reading and repeat the procedure for cylinders Nos. 2 and 3. If the three readings are approximately the same then proceed with the engine tune. If there is an appreciable difference in readings then it will be necessary to decarbonise cylinder head, as the loss of compression is probably due to faulty valves or valve seats.

Compression Figures

Compression ratio 17:1. Air temperature 68°F (20°C).

Crankshaft Speed	Pressure lb/in²	Pressure kg/cm²
150 rev/min	380 – 400	26·6 – 28·0
250 rev/min	415 – 435	29·0 – 30·5

2. **Injectors:** Service and set before replacing. (See Page 6.) Take care to fit copper sealing washers and tighten nuts down evenly to avoid distortion.
3. **Fuel:** Clean fuel sediment bowl and replace fuel filter elements as necessary. (See Page 4.) Vent the system, finishing with tightening the three injector unions (as in Fuel System, Page 5).
4. **Breather:** Fit a new breather element as instructed under Maintenance, Page 2.
5. **Valves:** Check valve clearances, taking care to follow instructions on Page 3.
6. **Timing:** Check timing marks on pump and pump drive housing to see if they are in line. If not, rotate pump until they are in line.

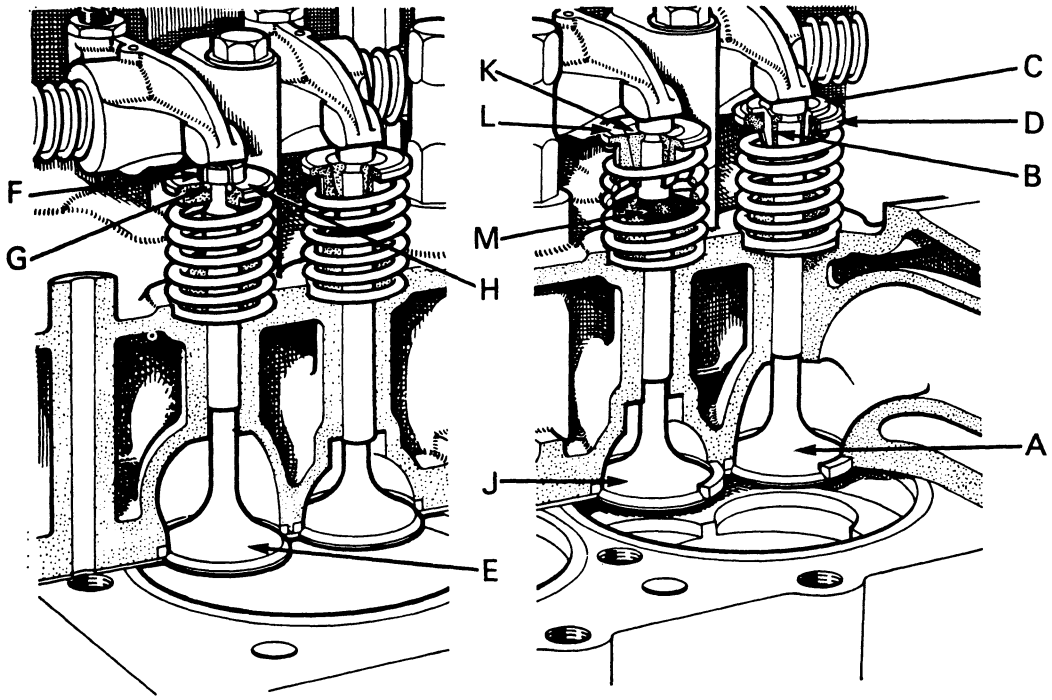

Figure 26. CYLINDER HEAD AND VALVES

A.	Exhaust valve	Late type valve	**E.**	Exhaust valve	Early type valve	**J.**	Inlet valve
B.	Cotters		**F.**	Cap—stem		**K.**	Cotters
C.	Collar		**G.**	Cotters		**L.**	Cup
D.	Cup		**H.**	Cup		**M.**	Seal

7. **Air Cleaner**: Clean out oil bath and replenish with the correct oil. Wash out gauze filter and clean tube and pre-cleaner. If a paper pre-cleaner is fitted, clean or renew the element. (See Page 1.)

Decarbonising the Engine

When compression is low or engine is down in power due to an accumulation of carbon inside combustion chamber, the cylinder head should be removed, cleaned of carbon deposits and the valves re-seated.

To Remove Cylinder Head

1. Remove injector leak-off pipe and three high pressure injector pipes.
2. Remove injectors and copper sealing washers. Before refitting, injectors will require servicing and testing. (See Page 6.)
3. Remove breather pipe from air cleaner and unscrew the four domed nuts and remove rocker cover and gasket.
4. Slacken clips on by-pass hose.
5. Remove rocker shaft oil-feed pipe.
6. Remove fastening bolts in inlet manifold which hold fuel pipe clip in position.
7. Remove rocker shaft assembly and pushrods.
8. Remove the four nuts, nine bolts and two lifting nuts, holding down the head, in reverse order to tightening procedure, to prevent distortion of head.
9. Lift off cylinder head and place on the bench.
10. Remove gasket, clean cylinder block face and oil the bores before covering over with a cloth for protection.

Dismantling the Cylinder Head and Cleaning

1. Remove inlet and exhaust manifolds, scraping out ports in exhaust manifold and washing to clean away carbon.
2. Mark all valves on base with a number to ensure re-assembly in same order.
3. Remove valve springs, cotters, collars and inlet valve seals and wash in paraffin.
4. Clean the head, scraping all carbon from valve ports, then wash and clean with an air jet.

Valves and Seats

Clean the valves and replace if necessary, using a suitable valve grinder. The valve faces should be ground at 45° and care must be taken not to remove too much metal as the exhaust valves will overheat if heads are ground to a knife-edge finish.

Examine the ends of the inlet valve stems and if worn, lightly skim on a valve refacing machine, using the guide to ensure that the end is ground square with the valve stem.

Figure 27
INLET VALVES AND SEAT INSERTS

A. $3\frac{13}{32}$ in. (88·52 mm)
B. $3\frac{3}{4}$ in. (95·25 mm)
C. $3\frac{13}{16}$ in. (96·84 mm)
D. 4·890 in. (124·21 mm)
E. 4·860 in. (123·44 mm)
F. 4·840 in. (122·94 mm)
G. 1·505 in. (38·23 mm)
H. 1·475 in. (37·46 mm)
J. 1·380 in. (35·05 mm)
K. $1\frac{3}{8}$ in. (34·92 mm)
L. $1\frac{9}{32}$ in. (32·54 mm)
M. 1·631 in. (41·43 mm)
N. 1·568 in. (39·83 mm)

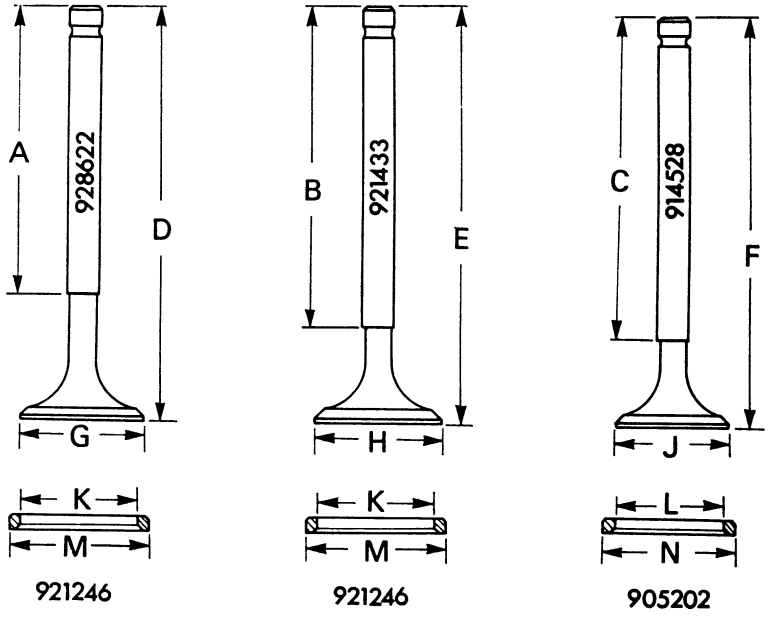

The current valve, Part No. 928622, is now fitted to both the inlet and exhaust on AD3/55, AD3/49 and 355011 engines. This valve may be used to replace inlet valve 921433 and exhaust valve 921434. If it is used to replace the exhaust valve the latest type cotters and collars must be used. The valve cannot be used to replace either the inlet valve 914528 or exhaust valve 900417.

The valves were changed at the following engine and serial numbers:

780 Tractor

Exhaust valve	Inlet valve	Serial number
928622	928622	6039 onwards
921434	921433	5584 to 6038
900417	914528	1001 to 5583

880 Tractor

Exhaust valve	Inlet valve	Serial number
928622	928622	25306 onward (Livedrive) 2984 onward (non-Livedrive)
921434	921433	24645 to 25309 (Livedrive) 2984 onwards (non-Livedrive)
900417	914528	1001 to 24644 (Livedrive) 1001 to 2983 (non-Livedrive)

770 Tractor

Exhaust valve	Inlet valve	Serial number
921434	921433	9970 onwards (Livedrive) 1879 onwards (non-Livedrive)
900417	914528	up to 9969 (Livedrive) up to 1878 (non-Livedrive)

When fitting 928622 valves ensure that the width of seat in the head insert is not less than 0·045 in. (1·14 mm) wide, to ensure that the valve does not seat at the edge of the valve head.

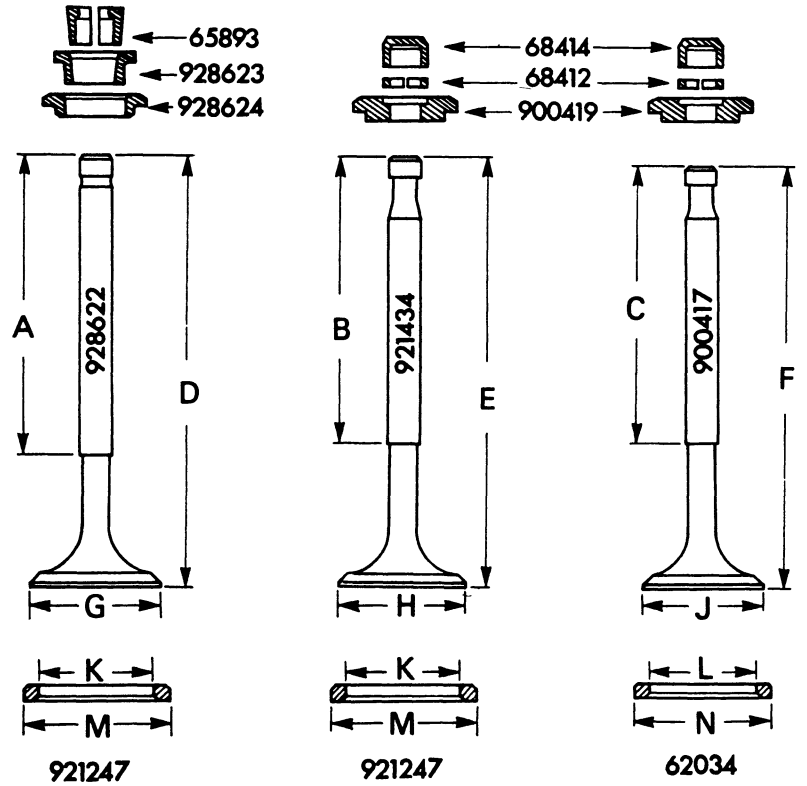

Figure 28
EXHAUST VALVES AND SEAT INSERTS

A. $3\frac{13}{32}$ in. (88·52 mm)
B. $3\frac{1}{4}$ in. (82·55 mm)
C. $3\frac{5}{32}$ in. (80·17 mm)
D. 4·890 in. (124·21 mm)
E. 4·835 in. (122·81 mm)
F. 4·798 in. (121·87 mm)
G. 1·505 in. (38·23 mm)
H. 1·456 in. (36·98 mm)
J. 1·362 in. (34·59 mm)
K. $1\frac{5}{16}$ in. (33·34 mm)
L. $1\frac{7}{32}$ in. (30·96 mm)
M. 1·631 in. (41·43 mm)
N. 1·568 in. (39·83 mm)

Examine valve seats. If seats are in good condition but only discoloured, lapping-in the valves will be sufficient to obtain a good seat, but if seats are pitted it may be necessary to recut them before lapping-in the valves. Use a valve seat cutter, or grinder, with a pilot of the correct diameter, to ensure an accurate

seat. (See Tool Leaflet B9.) Do not remove more metal than is necessary. If valve seat becomes wider than 0·065 in. (1·65 mm), the seat insert should be removed and a new insert fitted. To remove the insert, very carefully drill the insert at two opposite points, without damaging the cylinder head, then split the insert so that it can be removed without enlarging the head counter bore. Clean the head counterbore and after cooling new insert with dry ice (solid carbon dioxide) quickly tap it into position using Service Tool 960602. The seat must be fitted with its chamfered edge into the head counterbore and then ground flush with the head face before the seat is cut.

Oversize Valves

The valve guides are cast integral with cylinder head and if excessive wear takes place the guide can be reamed true and new valves with oversize stems fitted. Valves with 0·010 in. and 0·020 in. oversize stems are available and the appropriate size reamer should be used (see Service Tool Leaflet A28) to obtain an accurate bore. It is also important that the bore has a good surface finish and special care should be taken when reaming; use a liberal quantity of cutting fluid and do not turn the reamer backwards. When bore has been reamed to the correct size, fit new valve and check valve seat with marking blue. If valve head touches seat all the way round, lapping-in will be sufficient, but if valve head only touches seat at one side the seat is not concentric with guide bore and will require cutting before lapping-in.

Valve Springs

When all valves have been ground-in, wash the head and valves in kerosene until all traces of grinding compound have been removed, then dry with an air-line.

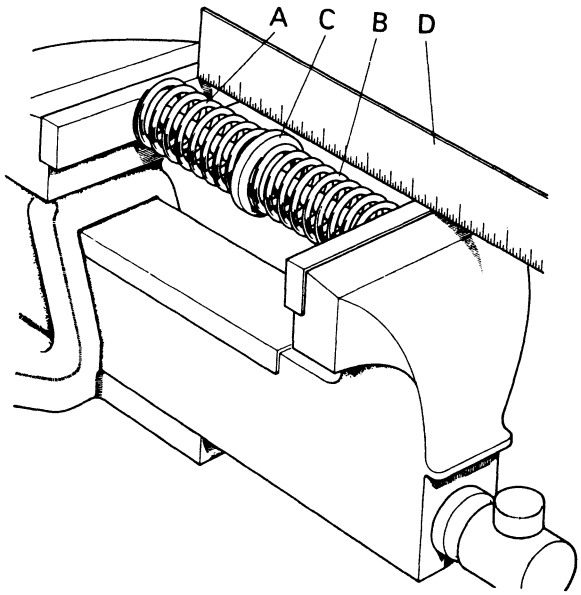

Figure 29. CHECKING VALVE SPRINGS

A. New spring **B.** Old spring
C. Spacer **D.** Rule

If suitable equipment is available, check spring lengths when under load. If equipment is not available check springs by comparing their tension with the tension of new springs. (Fig. 29.)

1. Select an average length spring from a set of *new* springs to use as a guide.
2. First compare free-length of new spring against old springs and discard any springs whose free-length is over $\frac{1}{16}$ in. (1·5 mm) shorter than the new spring.
3. Finally compare loaded length of springs by compressing the new spring and each old spring in turn, in series between vice jaws. For safety fit a short piece of bar, slightly smaller than inner diameter of springs, inside the springs and fit a short spacer between the spring ends. Compress springs between vice jaws until new spring is reduced to its loaded length (see data page) then measure length of old spring. If old spring is within $\frac{1}{16}$ in. (1·5 mm) of length of new spring it is satisfactory and can be refitted but any spring whose compressed length is more than $\frac{1}{16}$ in. (1·5 mm) shorter than new spring is weak and must be discarded.

Replace any weak, broken or corroded springs. If the engine has been run for a large number of hours it is advisable to replace the complete set of springs.

Cylinder Head Face

The face of cylinder head should be smooth and free from distortion and damage, otherwise the cylinder head gasket may be unable to provide an effective seal.

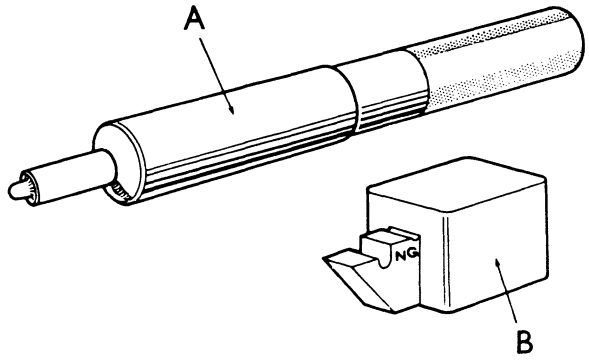

Figure 30. CYLINDER HEAD FACE GAUGES

A. Depth gauge (960938) **B.** Slip gauge (960940)

If the cylinder head face is reground care must be taken to obtain a smooth finish: a fine stone should be used with a slow feed. Before surface grinding check how much metal can be removed by using Service Tools 960938 and 960940. Insert depth gauge into injector recess, ensuring that both recess and tool are clean, then check protrusion of depth gauge above head face with slip gauge. If face G of slip gauge beak fouls end of depth gauge the cylinder head face has been previously ground to the

limit and no further grinding is permissible. If beak face G passes over end of depth gauge the head face can be ground and the thickness of feeler gauge which can be fitted between tip of depth gauge and face G will indicate the maximum amount of metal that should be removed.

Valve Lapping

Using a suitable tool to hold the valves and rough grinding paste, lap-in all the valves to obtain full-circle contact between valve and seat, then lap-in again with smooth grinding paste, and wipe clean.

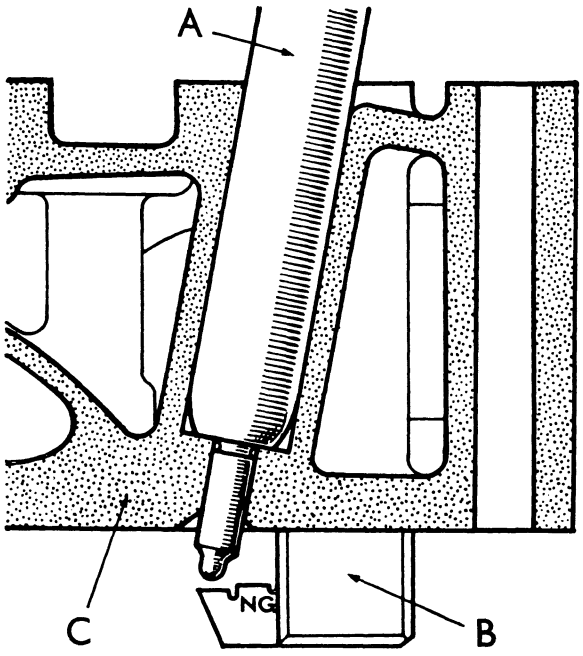

Figure 31. CHECKING THE CYLINDER HEAD BEFORE REFACING

A. Depth gauge **B.** Slip gauge **C.** Cylinder head

To Reassemble and Replace the Cylinder Head

1. Renew inlet valve seals (see Fig. 26) using Service Tool 961236, making sure there are no burrs on the chamfer in cylinder head recess. Put seal on to the tool, smear with grease and place tool in the recess. Two or three sharp taps with a copper hammer are sufficient to drive seal home. Do not fit seals until cylinder head is ready for assembling and do not withdraw a valve once it has been fitted through a seal. As pulling valve stem through seal causes the cotter groove to trap and damage the sharp edge of the seal, it is necessary to fit a new seal whenever a valve is removed.
2. Smear valve stems with a little oil and reassemble with the springs, collars and cotters, using a suitable tool to compress springs and ensuring that valves are fitted in their correct positions.
3. Refit inlet and exhaust manifolds using new gaskets.
4. Coat both sides of a new cylinder head gasket evenly with Wellseal. Allow gasket to dry for five minutes, keeping clear of dirt, then fit on to cylinder block with beaded side of gasket towards cylinder head.
5. Fit a new by-pass hose and lower cylinder head on to block. Following the tightening sequence shown in Fig. 32, progressively tighten down all head bolts and nuts in stages of 30, 60 and 90 lb ft (4, 8 and 12·5 kg metres).
6. Tighten by-pass hose clips and replace push-rods in their original positions. Ensure that the push-rods are not bent and check that they are correctly seated in the tappets.
7. Refit rocker shaft assembly and rocker lubrication pipe.
8. Replace injectors, fitting new copper sealing washers. Replace high-pressure injector pipes and leak-off pipe.

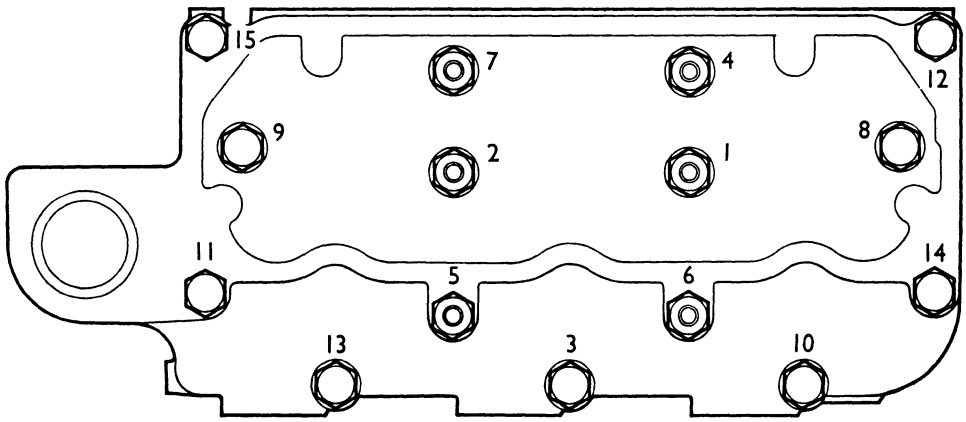

Figure 32. CYLINDER HEAD TIGHTENING SEQUENCE

Tighten the bolts in the order shown and in three stages of 30, 60 and 90 lb ft (4, 8 and 12·5 kg metres)

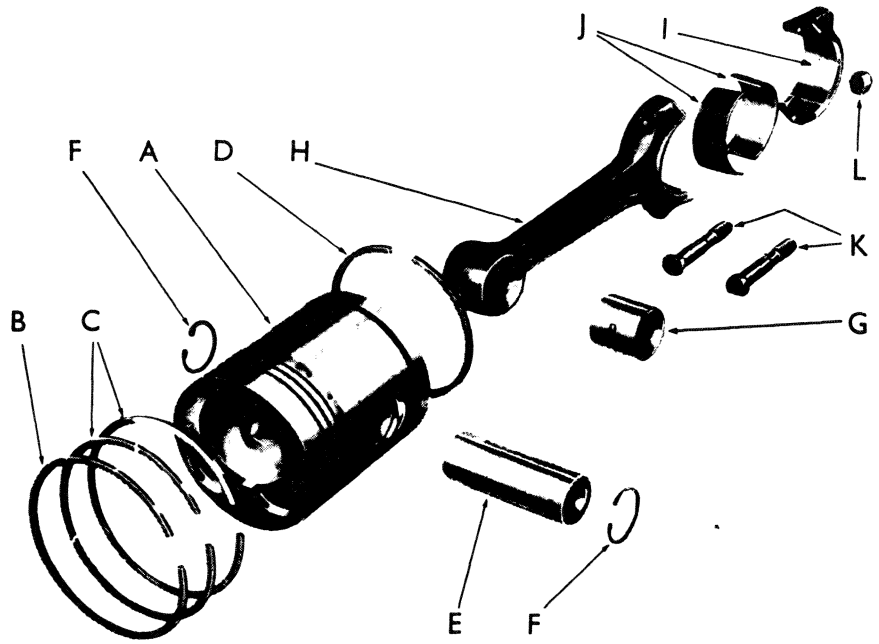

Figure 33. PISTON AND CONNECTING ROD

A. Piston
B. Top compression spring
C. Nos. 2 and 3 compression rings
D. Oil scraper ring
E. Gudgeon pin
F. Circlips
G. Bush
H. Connecting rod
I. Connecting rod cap
J. Big-end bearing shells
K. Connecting rod bolts
L. Self-locking nuts

9. Oil the rockers liberally and then proceed to set valve clearances. (See Page 3.)
10. Replace gasket and rocker cover and then refit breather pipe.
11. Refill radiator, start engine and check for any fuel, oil or water leaks. It is advisable to check tightness of cylinder head bolts and check valve clearances after the engine has been run for half-an-hour.

Pistons and Connecting Rods

The pistons cannot be removed through sump when crankshaft is in position, but by removing cylinder head and bearing caps they can be withdrawn through the top of bores.

Removing the Pistons

The bearing cap bolts must be removed to prevent possible damage to the bore as the connecting rod is pulled up through the bore. Having removed piston, check that connecting rod and bearing caps are marked and mark piston so that it can be replaced in same cylinder.

Gudgeon Pins

The fully floating gudgeon pins are retained by two circlips, one at each end of the pin, and to remove the gudgeon pin remove both circlips, then immerse piston in hot oil. This will cause piston to expand and allow the pin to be pushed out. Refit pin in same manner using hot oil, then replace circlips, ensuring that they are fully seated in their grooves. When refitted, the valve recess in piston crown should be on the same side as the identification number on connecting rod.

Connecting Rods

The small end of connecting rod is bushed and this can be replaced if worn. Press out worn bush, using a suitable sized mandrel, and press in new bush, ensuring that oil hole in the bush is opposite hole in the end of connecting rod. Hone, or ream, new bush after fitting until gudgeon pin is a light push fit.

Connecting rods should always be checked for alignment whenever they are removed and especially if the piston skirt marking is not even. The easiest way of checking connecting rods is by means of a proprietary aligning tool such as is shown in Service Tool Leaflet B5, but if such a tool is not available, mandrels and 'V' blocks can be used.

Maximum out of parallel:	0·0005 in./in.
	0·005 mm/cm
Maximum twist:	0·0005 in./in.
	0·005 mm/cm

If a connecting rod is outside the limits it must be renewed. Rods in these series of engines must not be straightened.

When replacing pistons check that the ring gaps are spaced round piston so that no two are in line, i.e., one above the other. Check that piston is the right way round: valve recesses to camshaft side of cylinder block. Replace piston through top of the bore, using a ring clamp to compress piston rings.

Smear oil on bearing surfaces and replace cap and bolts. Fit new nuts if self-locking ring in nuts can be screwed on to bolts with the fingers, and tighten up to specified torque. (See Page 33.)

Pistons and Rings

The pistons in AD3/40 and AD3/30 engines are the same diameter but are not interchangeable as they have different heights. Likewise, AD3/55, AD3/49 and 355011 pistons are the same diameter but of different height. For dimensions see Page 34.

There are three compression rings and one oil scraper ring on each piston. The top compression ring is plain on AD3/30 and AD3/40 engines, but is chromed on AD3/49, AD3/55 and 355011 engines. Numbers 2 and 3 compression rings are of the stepped type; these help to return oil back down the bore as well as acting as compression rings, and must be fitted correctly, i.e., cut-away section uppermost, otherwise oil will be pumped up the cylinder (See Fig. 34.) Number 4 ring is a single-piece cast iron scraper ring. This ring's function is purely to scrape oil down the bore, and the piston is drilled behind the ring to allow oil to pass through the piston skirt and back down to the sump.

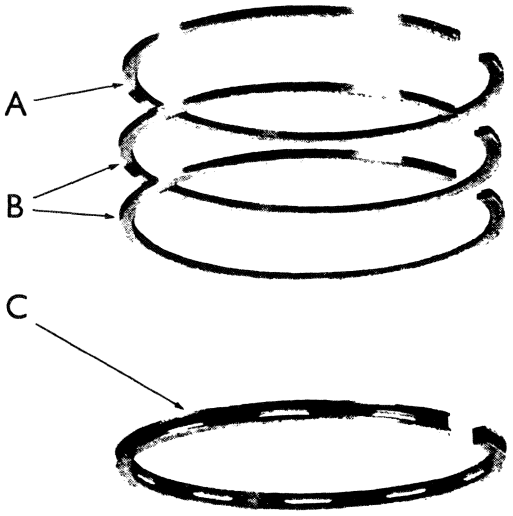

Figure 34. PISTON RINGS

A. Top ring with chrome insert
B. Nos. 2 and 3 stepped compression rings
C. Oil scraper ring

After removing carbon from the top, unworn part of the bore place the rings in position and check piston ring gaps. New rings will be required if the gaps exceed 0·060 in. (1·5 mm). For further guidance on bore wear see Guidance of Wear Limits on Page 34. Excessive top ring wear may be attributed to the ingress of dusty air, due to lack of air cleaner maintenance, and excessive lower ring wear may be attributed to dirty engine oil, due to infrequent oil and filter changes.

If the cylinder bores are worn, but not sufficiently for reboring, an oil control ring set can be fitted. These sets, which are available for both standard and oversize bores, include special top rings, which have a shoulder at the top so that the rings do not foul the ridge at the top of the bores, and spring-loaded steel scraper rings.

Pistons used with high-lift camshafts have slightly deeper valve recesses and pistons with shallower recesses must not be fitted to engines having a high-lift camshaft, as the valve heads would foul the piston.

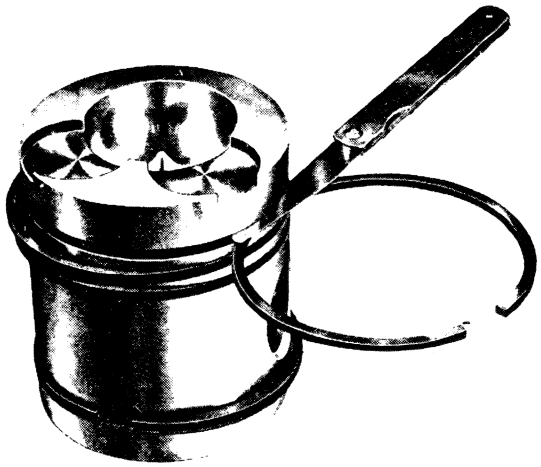

Figure 35. CHECKING PISTON RING GROOVE CLEARANCE

High-lift camshafts were fitted to all AD3/49, AD3/55 and 355011 engines, and also to AD3/40 engines from

AD3/40A/3424 AD3/40B/1495

but were not fitted to AD3/30 engines.

When fitting new pistons to AD3/40 engines subsequent to the above serial numbers ensure that they are of the later type, otherwise the pistons will foul the valve heads.

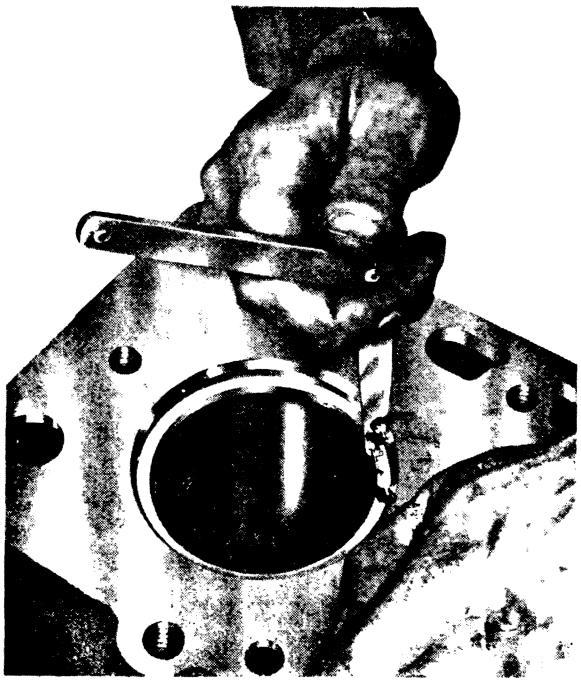

Figure 36. CHECKING PISTON RING GAP

Crankshaft and Bearings

Crankshaft Bearings: The shell type crankshaft bearings are steel backed and faced with a thin coating of soft, anti-friction material. The upper and lower big-end shells and the lower main bearing shells are faced with aluminium-tin, but the upper main bearing shells are faced with white metal.

Bearing shells are not interchangeable once they have been fitted and if not renewed must be replaced in their original position.

The bearing caps and shells are very accurately machined and no attempt should be made to file a bearing cap or scrape a bearing. Connecting-rod caps must only be used with their original connecting rods and main bearing caps must only be fitted to their original cylinder blocks.

Crankshaft Regrinding

If crankshaft journals are worn, or scored, the shaft should be reground and suitable undersize bearings fitted.

The crankshaft balance weights will have to be removed before grinding and, before removal, mark the weights to facilitate reassembly in the same position. When refitting the weights, remove any sharp edges from the face of crankshaft webs to ensure that the weights can seat solidly against the shaft. Always fit new securing bolts and tabwashers, and after tightening the bolts to 40 lb ft (5·528 kg metres) check that a 0·002 in. (0·05 mm) feeler gauge cannot be fitted between the weight and the crankshaft.

The two crankshafts, one for AD3/30 and AD3/49 and another for AD3/40, AD3/55 and 355011, have only one major difference, i.e., the latter has a greater throw to give a longer stroke.

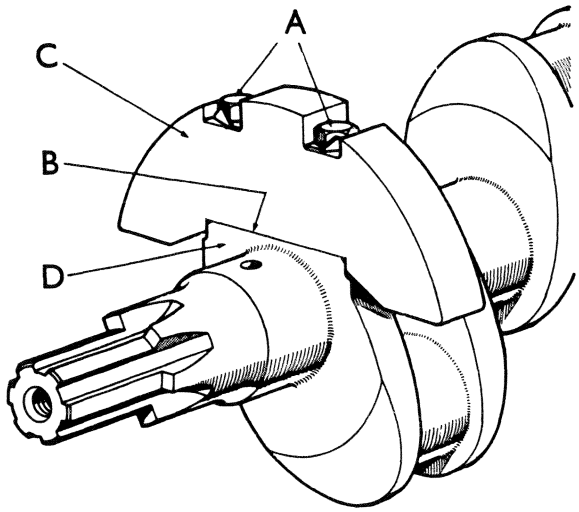

Figure 37. CHECKING BALANCE WEIGHTS AFTER REFITTING

When the balance weight bolts A are fully tightened, the gap B between the weight C and crankshaft web D must be so close that it will not accept a 0·002 in. (0·05 mm) feeler gauge

Front Main Bearing Cap

When the crankshaft is being fitted to the cylinder block it is necessary to seal the joint between the front main bearing cap and the block. The leading edges of the bearing cap should be coated with Wellseal (see Fig. 38) and allowed to stand for five minutes before fitting.

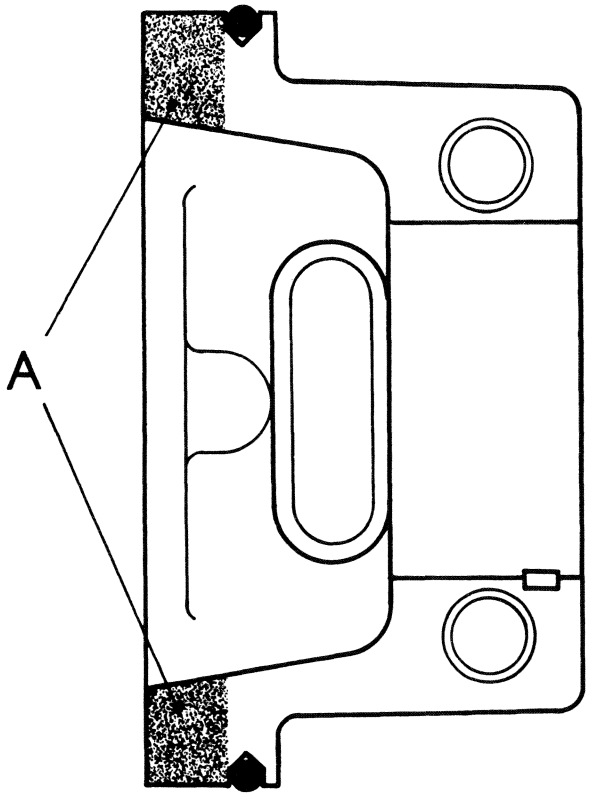

Figure 38. SEALING FRONT MAIN BEARING CAP

Apply a coating of jointing compound to the shaded area 'A' and allow to dry for not less than five minutes before fitting the cap

Crankshaft Rear Oil Seal

The rear main bearing is sealed by an oil retainer bolted to the block and cap. The retainer is in two halves and the method of obtaining a seal was changed from an internal scroll in the retainer to split asbestos packings, which make positive contact with the crankshaft. The two retainers are interchangeable and when overhauling an engine the latest type retainer should be fitted.

Worn or damaged packings should be replaced. Remove the old packings and clean out the retainer grooves. Smear one of the packings with adhesive to prevent it turning during service, then press packings carefully into retainer grooves. Roll packings into position with a smooth bar then trim ends flush

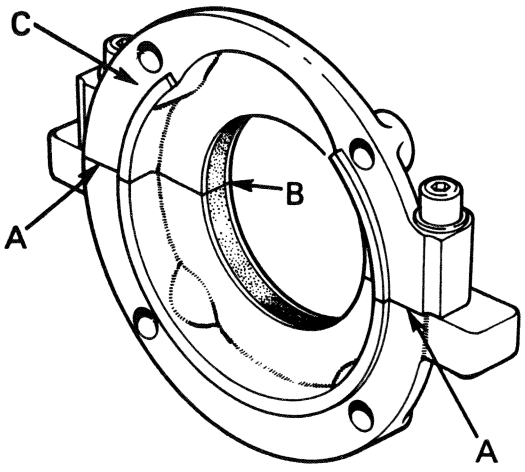

Figure 39. CRANKSHAFT REAR OIL SEAL

A. Check that Allen screws have sufficient clearance to permit both halves to be in line
B. Ensure that ends of packings do not cause gap between halves of retainer
C. Check mounting face for distortion and if necessary correct by filing

with retainer face and press corners into a chamfer, so that they will not spread out between retainer faces. Clamp retainer on to a 2·50 in. (63·5 mm) diameter mandrel (collar, Part No. 907503, can be used) to press packings into position and check that halves of retainer seat squarely together. (Fig. 39.)

Refitting Oil Seal

To ensure that there is no possibility of oil leakage between the two halves of the retainer, or between retainer and cylinder block, refit the retainer as follows:

1. Polish crankshaft with worn 320 grade emery cloth to a highly polished finish.
2. If gasket is in two halves (later gaskets are in one piece) trim each half so that edges will touch but not overlap. Smear retainer faces with a medium texture, non-hardening jointing compound. *Do not use a thick, hardening type of jointing compound and do not use gaskets thicker than standard.*
3. Do not fit spring washers on socket screws and setscrews, but fit copper washers (Part No. 626850) and fit retainer in inverted position, i.e. socket screw heads towards top.
4. Tighten bolts in the following order:
   (*a*) Tighten socket screws then unscrew half-a-turn.
   (*b*) Tighten setscrews firmly then firmly retighten socket screws.
   (*c*) Unscrew all four setscrews half-a-turn then retighten evenly and firmly.

Cylinder Block

All series three-cylinder engines utilise a common cylinder block, which is fitted with replaceable dry

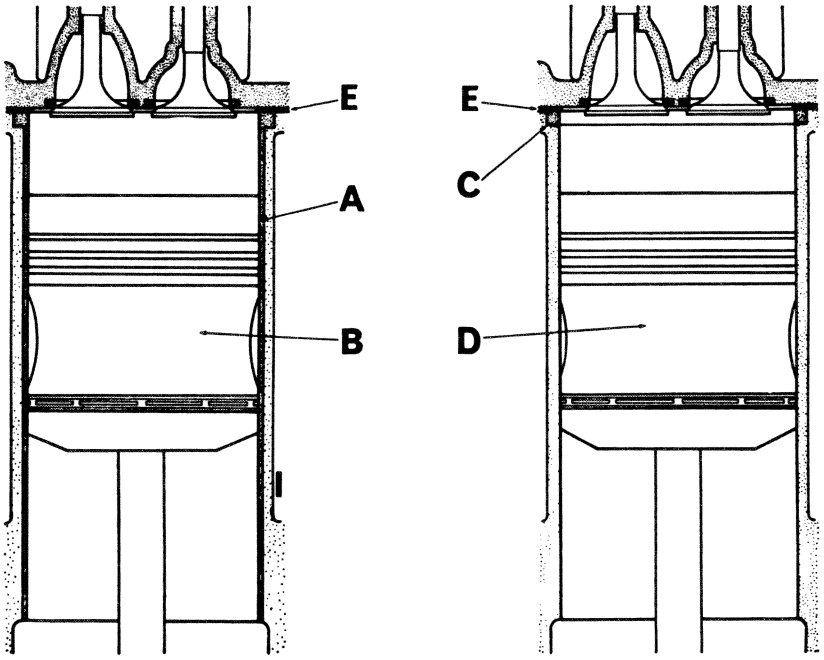

Figure 40. CYLINDER SLEEVES AND SEALING RINGS

A. Cylinder sleeve
B. Piston, $3\frac{13}{16}$ in. diameter
C. Sealing ring
D. Piston, $3\frac{15}{16}$ in. diameter
E. Cylinder head gasket

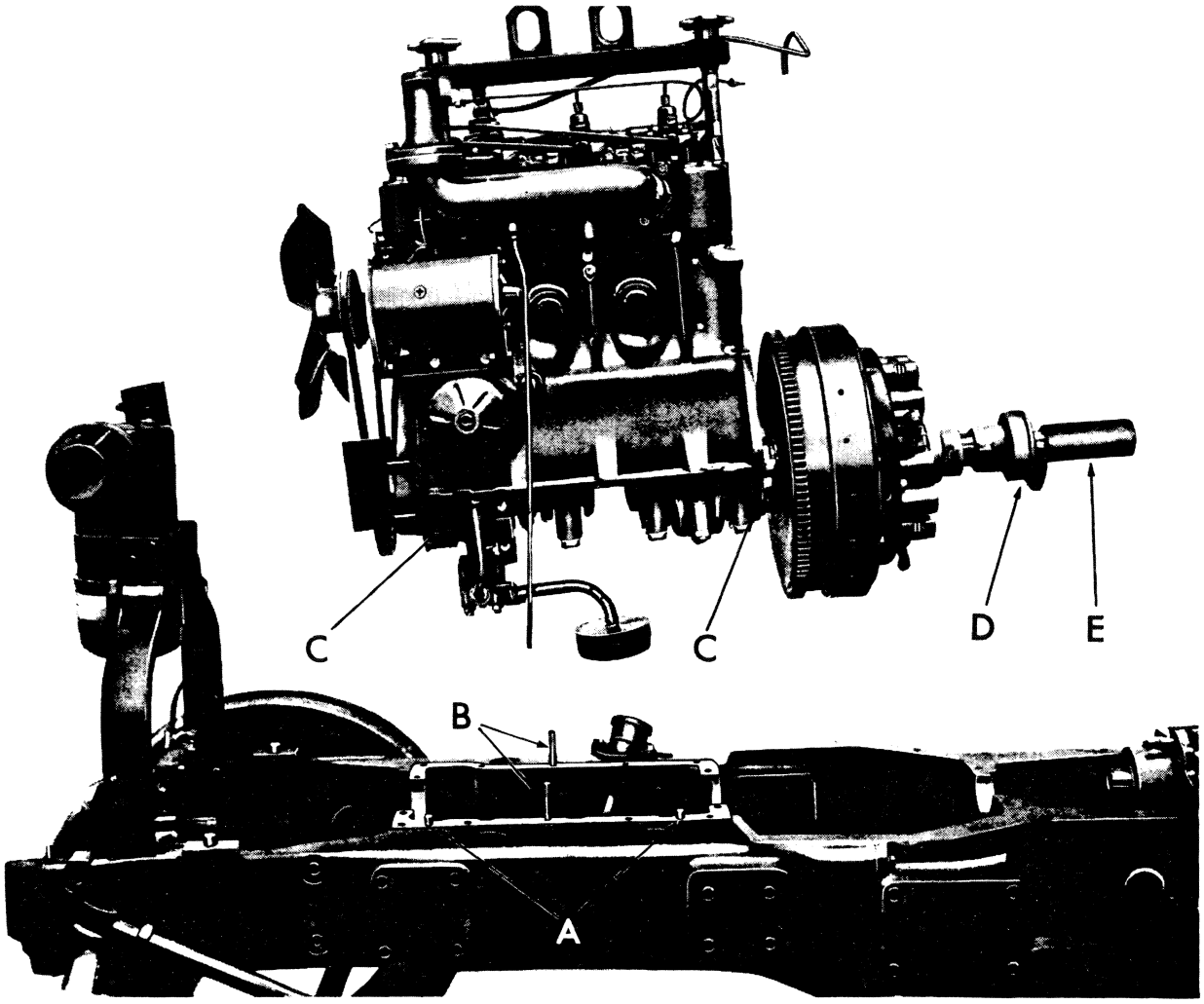

Figure 41. 770 TRACTOR WITH ENGINE REMOVED

A. Dowels **B.** Locating studs **C.** Main bearing cap oil seals
D. Clutch bearing support snout **E.** Clutch shaft muff coupling

sleeves on AD3/30 and AD3/40 engines only. On AD3/49, AD3/55 and 355011 the pistons operate directly in the block and sealing rings are fitted in the recesses at the top of the bores.

Worn sleeves can be pressed out quite easily but care must be taken not to crack the sleeves as this may score the block. Service Tool 901729, with the appropriate adaptors, is recommended as the sleeves are very thin and easily damaged.

To facilitate the fitting of new sleeves, the block should be heated, using a steam cleaner or boiling water, and the bores smeared with oil. Oil must not be smeared on outside of sleeve. The sleeves can then be pushed into block by hand, a slight pressure only being needed to push sleeve fully home.

AD3/49, AD3/55 and 355011 engines have integral bores and are fitted with a sealing ring at the top of each bore. This sealing ring gives the same protrusion above cylinder block face as the sleeve flange and must be removed in order to rebore a cylinder block. After reboring cylinder block fit new sealing rings with appropriate oversize bore.

Engine Removal and Replacement

On 770/780 tractors the engine can be lifted out of the main frame after first removing fuel tank and gearbox cover.

On 880 six-speed tractors not fitted with a clutch stop it is possible to lift the engine from the frame after first removing the clutch and flywheel, but as the flywheel is very heavy and cumbersome to lift out of the frame, the alternative method of splitting the tractor frame is recommended.

On all 880 twelve-speed tractors — and six-speed tractors fitted with a clutch stop — the clutch cannot be removed with the gearbox in position and the easiest way of removing the engine is to "split" the tractor frame. The clutch and flywheel can then be removed and the engine lifted out of the frame.

770/780 Engine Removal

1. Remove bonnet, drain radiator and cylinder block. If the fuel tank is full drain some off to reduce the weight.

2. Drain engine sump and disconnect battery.
3. Disconnect hoses and remove radiator.
4. Disconnect fuel pipe from upper side of fuel tank.
5. Disconnect tractormeter cable and instrument panel wiring.
6. Disconnect engine throttle and stop controls.
7. Remove fuel tank complete with instrument panel.
8. Remove steering box and column, disconnecting steering drop-arm.
9. Remove the two figure-of-eight springs from clutch release fork. These are accessible through cover in bottom of clutch housing.
10. Remove starter and take the bolts from gearbox cover: 17 bolts to frame, 5 bolts through rear axle. **Note that one of the gearbox cover bolts is inside the steering-box cavity.**
11. Lift gearbox cover off main frame, taking care that no dirt is allowed to fall into main frame.
12. Release circlip on clutch driveshaft so that the muff coupling can be slid forward until it is clear of gearbox shaft and remove the three bolts attaching the support snout to main frame.

On Livedrive tractors it is necessary to withdraw the power take-off cardan shaft out of the clutch. The transmission should therefore be drained the p.t.o. removed and the cardan shaft withdrawn so that it is clear of the clutch driveshaft.

Remove engine sump and remove the five engine holding-down bolts from underside of frame: two of these are at the front, two at the rear and one under the oil pump.

Remove the remaining bolts from the lower flange of cylinder block then lift engine vertically out of frame. Ensure that the clutch driveshaft and support snout are lifted clear of frame and take care not to damage oil pump when lowering engine on to the stand or bench.

Replace engine in the reverse order to removal, using new gaskets and seals. Clean main frame and cylinder block faces, ensuring that all traces of the old gasket are removed. Smear main frame face with jointing compound, also both sides of the gaskets before placing them in position. A rubberised jointing compound may be used in preference to Wellseal. Fit new bearing-cap seals, pushing ends of seals into holes in block so that seals fit closely in bearing cap grooves.

Two $\frac{3}{8}$ UNC studs temporarily screwed into main frame at opposite points will assist in locating the engine and allow it to be lowered into position without disturbing the gaskets. Note that the clutch shaft is inserted in the clutch, and the support snout and muff coupling are in position on the shaft, before lowering the engine into position.

880 Engine Removal

1. Disconnect tractormeter cable, throttle and engine stop controls and disconnect wiring to the instrument panel.

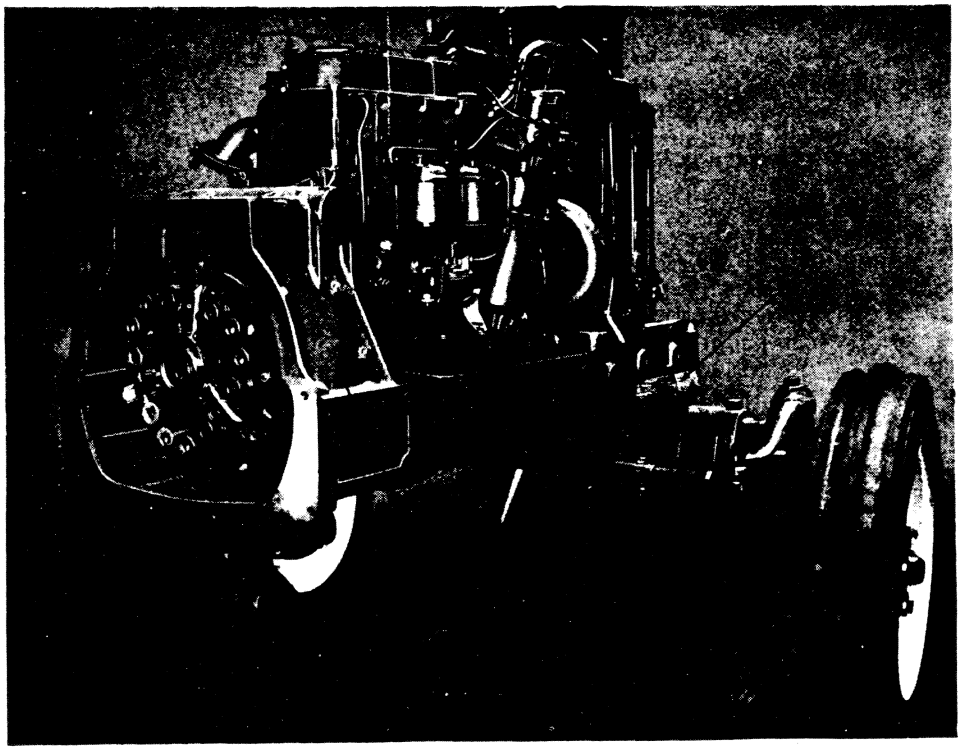

Figure 42. 880 TRACTOR "SPLIT" FOR ENGINE REMOVAL

A. Supporting wedges **B.** Clutch assembly **C.** Flywheel housing

2. Drain and remove fuel tank, complete with instrument panel.
3. Drain radiator and cylinder block, disconnect hoses and remove radiator.
4. Drain engine sump then remove sump cover; remove the two cylinder block bolts from inside the frame and the third bolt from below the injection pump.
5. As it is necessary to "split" the tractor main frame, place adequate supports under rear main frame to hold the frame in line with the flywheel housing. Drive suitable wooden wedges between each side of the axle beam and tractor frame, so that the front half of the tractor will remain vertical when it is drawn forward away from the rear half of tractor.
6. Remove vent cover from the underside of flywheel housing and push a trolley jack under the front of tractor until the lifting pad is under flywheel housing. With a small wooden block between the jack and flywheel housing, support weight of engine and remove bolts attaching the flywheel housing to rear main frame and clutch cover, then carefully pull the trolley jack forward to "split" the tractor. Adjust the height of trolley jack and also rear main frame jack, so that the two halves of tractor remain in line and pull the front half forward until there is sufficient room to remove the clutch. Remove trolley jack, allowing front frame to rest on suitable supports; remove clutch, flywheel and flywheel housing. After removing the bolts from lower flange of cylinder block, lift engine unit from frame.

Replace engine in the reverse order to removal, using new gaskets and seals. Clean cylinder block and main frame faces, ensuring that all traces of the original gasket are removed. Smear main frame face with jointing compound, also both sides of the gaskets before placing them in position. A rubberised jointing compound may be used in preference to Wellseal. Fit new main bearing cap seals, placing the ends of seals into the holes in the cylinder block so that the seals fit closely in the bearing cap grooves.

Two $\frac{3}{8}$ UNC studs temporarily screwed into main frame will assist in locating engine and prevent any possibility of disturbing the gaskets. The studs should be screwed into frame at opposite sides and removed after the engine is lowered into position. Screw all engine mounting bolts in but do not tighten until flywheel housing has been bolted in position. After firmly tightening the flywheel housing bolts, replace flywheel and clutch, ensuring that the two drive plates are centralised, so that the driveshafts can enter the clutch when the two halves of main frame are brought together. Figure 44 gives the dimensions of a pilot shaft for aligning the clutch plates during assembly.

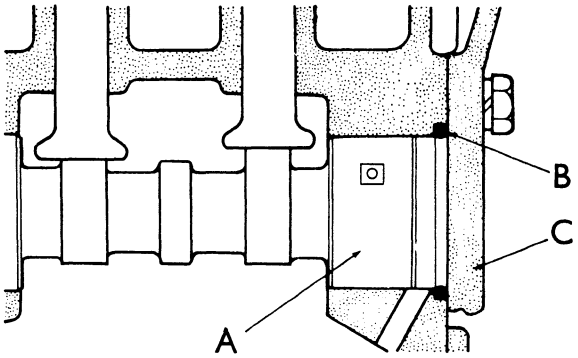

Figure 43. CAMSHAFT REAR BEARING 'O' RING 880 TRACTORS

A. Camshaft rear journal **B.** 'O' ring
C. Flywheel housing

Before reassembling the two halves of tractor, check that the p.t.o. cardan shaft has not been pulled outward. With the p.t.o. in high ratio, turn and push the cardan shaft, to ensure that the coupling on the rear end of the shaft is engaged on the p.t.o. input shaft splines.

Refit the two halves of tractor, lifting front with the trolley jack, so that the driveshafts enter clutch. Two long studs temporarily screwed into main frame flange will assist in holding the two frames in line until the dowels are entered. It will probably be necessary to turn engine as the driveshafts enter clutch to engage the clutch plate splines on the driveshafts. Refit main frame bolts and tighten pro-

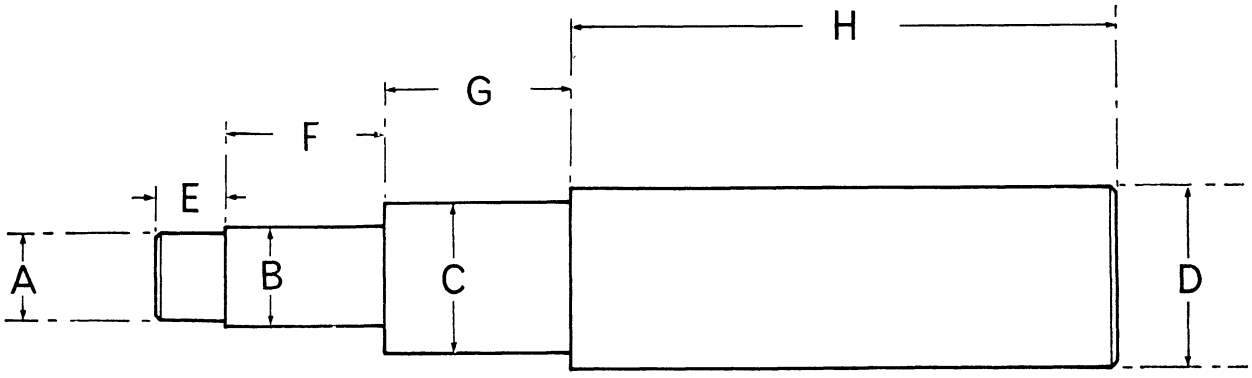

Figure 44. CLUTCH PLATE PILOT

A. ·874 in. (22·20 mm) **B.** ·915 in. (23·24 mm) **C.** 1·420 in. (36·07 mm) **D.** 1·771 in. (44·98 mm)
E. $\frac{5}{8}$ in. (15·88 mm) **F.** $1\frac{1}{2}$ in. (38·10 mm) **G.** $1\frac{3}{4}$ in. (44·45 mm) **H.** 5 in. (127 mm)

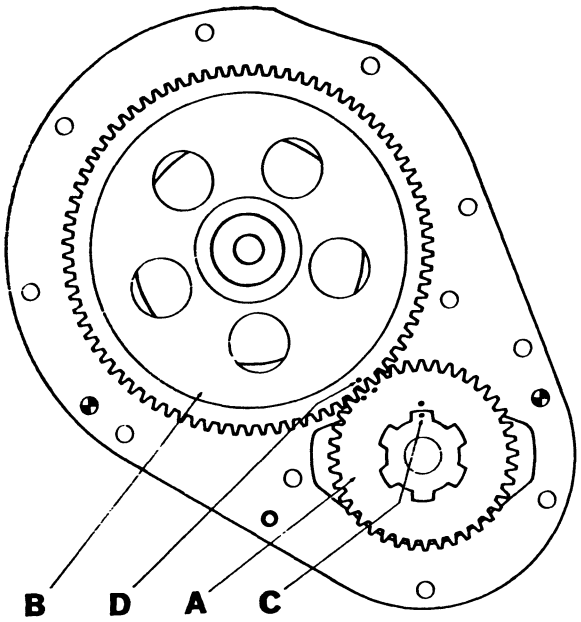

Figure 45. TIMING GEAR MARKING

A. Crankshaft gear
B. Camshaft gear
C. Crankshaft spline mark
D. Camshaft gear mark

gressively by diagonal selection, so that the frame flanges are not distorted.

Remove the jacks, refit sump cover and radiator. Refill with oil and water, replace fuel tank and instrument panel.

Timing Gears

As the injection pump is driven from the camshaft, there are only two gears in the timing case, namely: crankshaft gear and camshaft gear. These have fine pitched spur teeth to give long life and quiet running.

Caution: Do not turn the crankshaft when the timing gears are out of mesh, or incorrectly meshed, as damage may be caused by the valve heads fouling the pistons.

To time camshaft, set engine with No. 1 piston at TDC on compression stroke. Slide the crankshaft gear on to splined crankshaft, taking care to line up the centre-punch marks. Without moving the crankshaft, fit the camshaft gear on to camshaft so that the centre-punch marks on both gears line up. In this position the camshaft keyway will be at six o'clock. (See Fig. 45.)

Timing gears are now common on all three cylinder engines which means there are now two timing marks. Punch marks have been deleted and a D and G stamped in their place. Align the D with the punch mark on the crankshaft when timing diesel engines and the G with the punch mark when timing Gasolene engines. This common camshaft gear was introduced at the following engine numbers:

AD3/55A	serial number	17418 onwards
AD3/55B	serial number	2615 onwards
355011	serial number	2551 onwards
AD3/49A	serial number	7867 onwards
AD3/49B	serial number	1627 onwards

When refitting timing cover, replace crankshaft pulley, to centralise oil seal with crankshaft, before tightening bolts.

The crankshaft pulley is also splined on to the crankshaft. After refitting it, take care to place the 'O' ring behind the plain retaining washer.

Injection Pump Drive

The drive hub and gear are in one piece and are driven from the camshaft. The hub, which is internally splined to drive the oil pump and fuel pump, is supported in the drive housing on two bearings (an upper ball bearing and a lower Torrington needle roller bearing) which are located by circlips. The whole drive assembly is removable as a unit after removing the injection pump.

The upper ball bearing is located by two circlips and may be pressed out of the housing after removing the needle roller bearing and lower circlip.

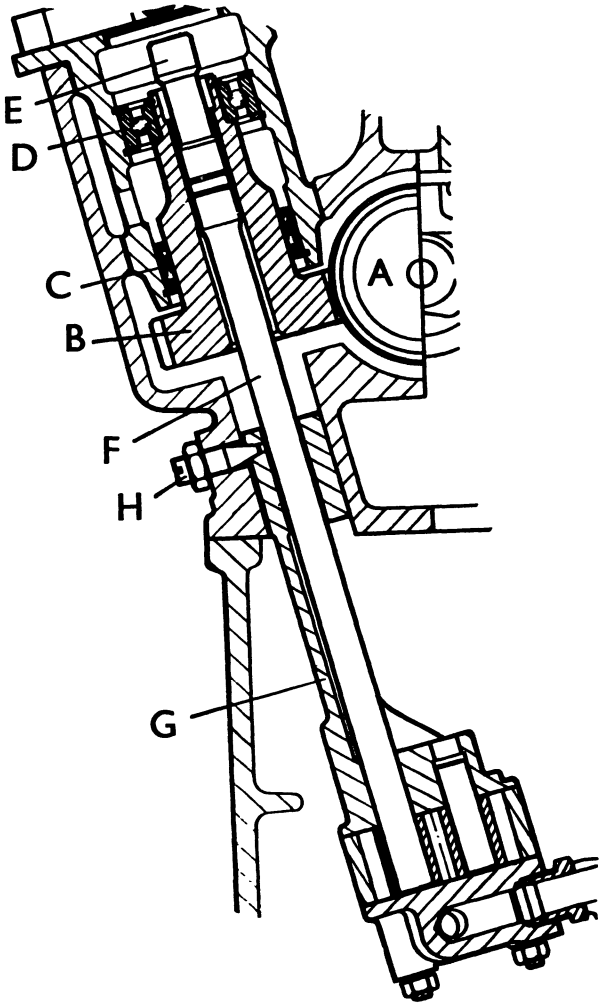

Figure 46. SECTION THROUGH INJECTION PUMP DRIVE

A. Camshaft skew gear
B. Driven gear
C. Needle roller bearing
D. Ball bearing
E. Injection pump driveshaft
F. Oil pump driveshaft
G. Oil pump bracket
H. Oil pump locating screw

The needle roller bearing consists of a number of small diameter needle rollers housed inside a thin steel shell. The ends of the rollers are chamfered and the ends of the shell are lipped inwards so that they pass round the roller chamfers and retain the rollers in position. It is therefore important that no undue force is applied to the shell as this may distort the lip and jam the needle rollers.

If removed, the bearing should be discarded as the shell may have been distorted when it was driven out of the housing. When fitting a new bearing a special tool must be used to prevent the shell lip from being damaged (Fig. 47). The stamped end of the bearing should be placed against the tool, the bearing placed squarely in position and then *pressed* in. Under no circumstances should the bearing be driven, or hammered in, even when using the special tool.

Timing the Injection Pump Drive

Turn engine until No. 1 inlet valve closes then insert timing peg into hole marked SP in flywheel housing. Continue turning engine slowly until peg drops into the indentation in flywheel. The engine is now set at the point of injection on No. 1 cylinder, and with

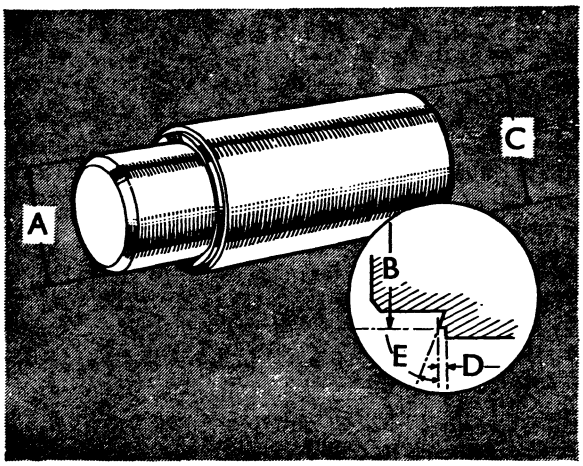

Figure 47. NEEDLE ROLLER BEARING TOOL

A. Diameter 1·746 in. (44·347 mm)
B. Diameter 2·117 in. (53·772 mm)
C. Diameter 2⅜ in. (60·325 mm)
D. Recess 0·280 in. (7·112 mm)
E. Chamfer 15°

the engine at this position the master spline in the injection pump drive should be at six o'clock when facing the right-hand side of the engine. As the pump drive gear will turn as it slides into mesh, set master spline at four o'clock then push the housing down into position.

The master spline will then turn into the six o'clock position as the housing is pushed fully home.

Valve Gear

Camshaft: The camshaft drives the injection pump through a skew gear. This gear is a press fit on

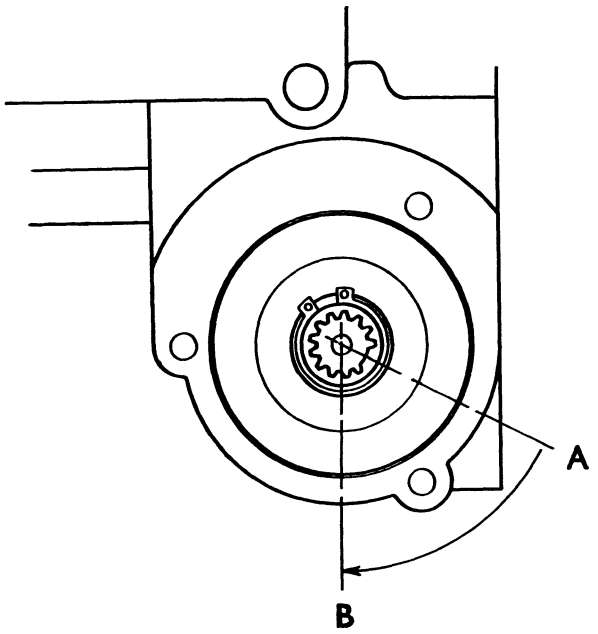

Figure 48. REPLACING THE INJECTION PUMP DRIVE HOUSING

Set the master spline at 4 o'clock, position 'A', then push the drive assembly into the cylinder block. As the driven gear will turn as it is pushed into mesh with the camshaft gear the master spline will turn clockwise until it is at 6 o'clock, position "B" when the housing is fully home. In the event of the master spline not falling exactly at 6 o'clock a position slightly after this should be used. The spline must not fall **before** the 6 o'clock position

to the camshaft shoulder and is located by a Woodruff key.

The shaft is supported at the front by a housing bolted to the cylinder block. This housing can only be fitted in the correct position as the bolt holes are not equally spaced. This ensures that the lubrication ports in the housing are in the correct position to lubricate the skew gears, timing gears, etc.

The camshaft also drives the tractormeter by a skew gear, which is an integral part of the shaft, situated between the cam lobes for No. 3 cylinder.

The tractormeter driven gear is mounted in a housing which fits into the cylinder block. The housing is sealed by an 'O' ring and located by a setscrew.

Camshaft Removal

1. Drain the water and remove radiator.
2. Remove injection pump and pump drive housing.
3. Remove fan belt, withdraw crankshaft pulley and remove timing cover.
4. Cut locking wire and remove camshaft gear retaining bolt.
5. Withdraw camshaft gear and remove locating housing — three fastening bolts.

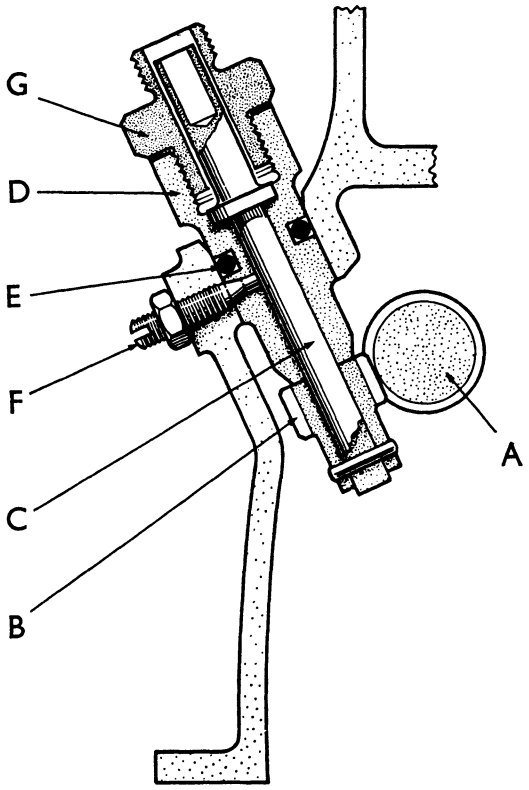

Figure 49. TRACTORMETER DRIVE

A. Camshaft **B.** Driven gear **C.** Drive shaft
D. Housing **E.** 'O' ring **F.** Locating screw
G. Adaptor

6. Remove rocker cover, rocker shaft assembly and push rods.
7. Remove tappet covers, lift up each tappet and fit ½ in. internal diameter 'O' ring on each. This stops the tappets falling and preventing the camshaft from being removed.
8. Remove tractormeter drive gear and housing complete.
9. Withdraw camshaft forwards out of block.

High lift camshafts, Part No. 914527, are fitted to all AD3/49, AD3/55 and 355011 engines and also to AD3/40 engines from:

AD3/40A/3424 AD3/40B/1495

but were not fitted to AD3/30 engines. Camshafts may be identified by the part number cast on the shaft between No. 1 cylinder cam lobes, and a 912765 shaft must not be replaced by a 914527 shaft unless new pistons are also fitted, otherwise the valve heads will foul the pistons.

Replace camshaft in the reverse order to removal — not forgetting to remove 'O' rings from tappets — retime camshaft gear and reset tappet clearances.

To Rebush Valve Rockers

Remove rocker shaft assembly and place on the bench. Unscrew the brass plugs from the ends of shaft and remove springs, rockers and shaft brackets, placing them in order on the bench.

Press out worn bush and fit new one, ensuring that oil-hole is opposite hole in rocker. Hone, or ream the bush until rocker is free to slide on the shaft.

If rocker end faces are worn, lightly skim on a smooth grindstone, taking care to maintain the original profile. Do not remove more metal than necessary: grind only until the wear mark is almost, but not fully, removed.

Assemble rockers, springs and brackets on to shaft. Fit locating screw into rear bracket, noting that the shaft is positioned with oil-feed holes towards the bottom, then peen the bracket over screw-hole to retain the screw.

DIMENSIONAL DATA

Torque Figures

Big-end bearing nuts	50 lb ft	6·925 kg metres
Breather filter cover nut	10 lb ft	1·383 kg metres
Camshaft gear bolt	40 lb ft	5·532 kg metres
Crankshaft balance weight bolts	40 lb ft	5·532 kg metres
Crankshaft pulley bolt	90 lb ft	12·46 kg metres
Cylinder head nuts and bolts	90 lb ft	12·46 kg metres
Cylinder head studs into block	25 lb ft	3·46 kg metres
Flywheel housing to engine bolts	30 lb ft	4·146 kg metres
Flywheel nuts	50 lb ft	6·925 kg metres
Front extension to main frame bolts	120 lb ft	16·614 kg metres
Fuel Injection Pump:		
Automatic retard fixing bolt	120 lb in	1·38 kg metres
Governor housing nuts (Permanite gasket)	40 lb in	0·46 kg metres
Governor housing nuts (cork gasket)	30 lb in	0·35 kg metres
Head-side fixing bolts	170 lb in	1·96 kg metres
Inspection cover nuts	30 lb in	0·35 kg metres
Inspection pipe banjo bolts	270 lb in	3·11 kg metres
Manual lock fixing bolt	350 lb in	4·02 kg metres
Throttle and stop lever nuts	30 lb in	0·35 kg metres
Main bearing cap bolts	120 lb ft	16·614 kg metres
Main frame to engine bolts	30 lb ft	4·146 kg metres
Main frame to flywheel housing bolts	50 lb ft	6·925 kg metres
Oil filter bowl bolt	10 lb ft	1·383 kg metres
Sump to main frame bolts	20 lb ft	2·766 kg metres
Valve rocker adjusting nuts	14 lb ft	1·940 kg metres

The following figures apply to bolts of standard material with either coarse (UNC) or fine (UNF) threads and may be used for all bolts and nuts not listed in the previous table.

Thread Diameter	Torque	
$\frac{1}{4}$ in	7 lb ft	0·97 kg metres
$\frac{5}{16}$ in	15 lb ft	2·07 kg metres
$\frac{3}{8}$ in	25 lb ft	3·46 kg metres
$\frac{7}{16}$ in	45 lb ft	6·22 kg metres
$\frac{1}{2}$ in	65 lb ft	8·98 kg metres
$\frac{5}{8}$ in	110 lb ft	15·2 kg metres
$\frac{3}{4}$ in	140 lb ft	19·3 kg metres

Capacities

Cooling system		2·25 gal	10·21 litres
Engine lubricating oil		11·0 pints	6·25 litres
Steering box oil		2·0 pints	1·1 litres
Air cleaner oil bath:			
AD3/40, AD3/55	880	1·0 pint	0·55 litres
AD3/55	880	1·25 pint	0·71 litres
355011	780	1·25 pint	0·71 litres
AD3/30	770	1·0 pint	0·55 litres
AD3/49	770	1·0 pint	0·55 litres
Fuel tank:			
AD3/40	880	8·75 gal	40·0 litres
AD3/55	880	11·5 gal	52·3 litres
AD3/30	770	8·0 gal	36·4 litres
AD3/49	770	8·0 gal	36·4 litres
355011	780	8·0 gal	36·4 litres

Wear Limits

The following figures are only intended to serve as a guide to determine when a component should be renewed:

Crankshaft big-end journals should be reground if ovality exceeds 0·005 in. (0·127 mm).

Crankshaft main-bearing journals should be reground if wear exceeds 0·005 in. (0·127 mm).

Piston rings should be replaced if the ring gap exceeds 0·060 in. (1·524 mm) when checked in the unworn part of the cylinder.

When there is evidence of ring and slight bore wear causing oil consumption, fit oil control rings. These should control oil consumption if the bore wear is not greater than 0·010 in. (0·25 mm) and are available to suit either standard or oversize bores. If oil consumption exists and oil control rings have already been fitted it will be necessary to rebore the cylinders and fit oversize pistons.

Piston groove clearance should not exceed 0·010 in. (0·25 mm) when checked with a new ring.

Oversize valves should be fitted if the bore in the cylinder head is worn in excess of 0·006 in. (0·15 mm). For details of oversize reamers and seat cutter pilots see Service Tool Leaflet A28.

Pistons

AD3/40, nominal diameter		$3\frac{3}{16}$	in	96·8	mm
AD3/55, nominal diameter		$3\frac{15}{16}$	in	100·0	mm
AD3/30, nominal diameter		$3\frac{3}{16}$	in	96·8	mm
AD3/49, nominal diameter		$3\frac{15}{16}$	in	100·0	mm
355011, nominal diameter		$3\frac{15}{16}$	in	100·0	mm
AD3/40, skirt diameter	3·8063 — 3·8055		in	96·68 — 96·66	mm
AD3/55, skirt diameter	3·9323 — 3·9315		in	99·9 — 99·8	mm
AD3/30, skirt diameter	3·8063 — 3·8055		in	96·68 — 96·66	mm
AD3/49, skirt diameter	3·9323 — 3·9315		in	99·9 — 99·8	mm
355011, skirt diameter	3·9323 — 3·9315		in	99·9 — 99·8	mm
AD3/40, height		4	in	101·6	mm
AD3/55, height		4	in	101·6	mm
AD3/30, height		$4\frac{1}{2}$	in	114·3	mm
AD3/49, height		$4\frac{1}{2}$	in	114·3	mm
355011, height		4	in	101·6	mm

Piston Rings

Ring gap	0·011 — 0·016		in	0·28 — 0·406	mm
Compression ring, clearance in groove	0·00225 — 0·00375		in	0·057 — 0·078	mm
Scraper ring, clearance in groove	0·002 — 0·003		in	0·0508 — 0·0762	mm
Gudgeon pin diameter	1·250 — 1·2495		in	31·750 — 31·745	mm

(Push-fit in connecting rod bush, light-drive fit in piston)

Bore Sizes (new), AD3/49 and AD3/55:

Standard	3·9396 — 3·9388		in	100·06 — 100·04	mm
Oversize 0·020 in	3·9596 — 3·9588		in	100·57 — 100·55	mm
Oversize 0·040 in	3·9796 — 3·9788		in	101·08 — 101·06	mm

Sealing Ring (internal diameter) bore:

Standard	3·944 — 3·942		in	100·18 — 100·13	mm
Oversize 0·020 in	3·964 — 3·962		in	100·68 — 100·63	mm
Oversize 0·040 in	3·984 — 3·982		in	101·19 — 101·14	mm

Bore Sizes (new), AD3/40 and AD3/30:

Sleeve diameter	3·8135 — 3·8125		in	96·86 — 96·84	mm
Taper — maximum		0·0005	in	0·0127	mm
Ovality — maximum		0·0005	in	0·0127	mm
Protrusion (excluding ridge)	0·002 — 0·005		in	0·058 — 0·0127	mm

Valve Clearances (set cold):

AD3/30 A and B — inlet	0·015 in	0·35 mm
AD3/49 A and B — inlet	0·010 in	0·25 mm
AD3/40A (up to No. 3424) — inlet	0·015 in	0·35 mm
AD3/40B (up to No. 1495) — inlet	0·015 in	0·35 mm
AD3/40 A and B (after above Nos.) — inlet	0·010 in	0·25 mm
AD3/55 A and B — inlet	0·010 in	0·25 mm
AD3/30 A and B — exhaust	0·012 in	0·30 mm
AD3/49 A and B — exhaust	0·007 in	0·18 mm
AD3/40A (up to No. 3424) — exhaust	0·012 in	0·30 mm
AD3/40B (up to No. 1495) — exhaust	0·012 in	0·30 mm
AD3/40 A and B (after above Nos.) — exhaust	0·007 in	0·18 mm
AD3/55 A and B — exhaust	0·007 in	0·18 mm

The following engines now have both the inlet and exhaust valves set at 0·010 in (0·25 mm) clearance.

AD3/55A	serial number	25306 onwards
AD3/55B	serial number	2984 onwards
AD3/49A	serial number	9970 onwards
AD3/49B	serial number	1875 onwards
355011	serial number	6039 onwards
355012	serial number	1001 onwards

Valve Springs (inlet and exhaust):

Free length	1·970 in	5·0 cm
Length at 40 lb load	1·530 in	
Length at 80 lb load	1·102 in	
Length at 15 kg load		4·08 cm
Length at 30 kg load		3·15 cm

Valve Stem Diameters (inlet and exhaust):

Standard	0·3732 — 0·3722 in	9·479 — 9·454 mm
Oversize 0·010 in (0·007 mm)	0·3832 — 0·3822 in	9·733 — 9·708 mm
Oversize 0·020 in (0·014 mm)	0·3932 — 0·3922 in	9·987 — 9·962 mm
Valve seat angle	45°	45°
Valve guide bore	0·375 — 0·374 in	9·525 — 9·499 mm
Valve tappet diameter	0·624 — 0·623 in	15·850 — 15·824 mm

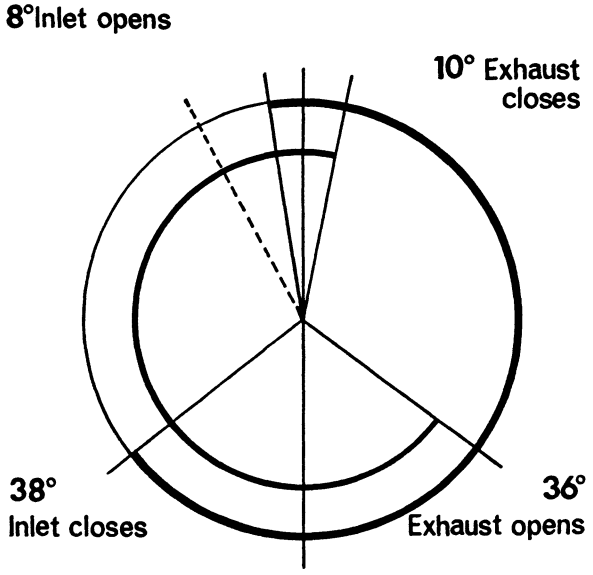

Figure 50. VALVE TIMING DIAGRAM

Valve Timing:

Inlet opens	8° before top dead centre
Inlet closes	38° after bottom dead centre
Exhaust opens	36° before bottom dead centre
Exhaust closes	10° after top dead centre

Fuel System:

Injector setting pressure	175 atmospheres (1810 kg/cm²)
Spill timing (static)	16° before top dead centre

Spill timing mark: Pump flange and engine mounting flange are marked, and correct pump timing is obtained when these marks are in alignment.

Spill timing adjustment: Elongated holes in the injection pump mounting flange permit the pump body to be rotated when the three securing nuts are released.

Injection Pump Flange Marking:

AD3/30	32° from blank spline when at point of injection
AD3/40	34° from blank spline when at point of injection
AD3/49	36° from blank spline when at point of injection
AD3/55	34° from blank spline when at point of injection
355011	34° from blank spline when at point of injection

Injection Pump Fuel Setting:

AD3/40	10·7 cc ± 0·1 cc per 200 shots at 1000 rev/min
AD3/55	10·9 cc ± 0·1 cc per 200 shots at 1100 rev/min
AD3/30	8·9 cc ± 0·1 cc per 200 shots at 1000 rev/min
AD3/49	10·1 cc ± 0·1 cc per 200 shots at 1000 rev/min
355011	10·9 cc ± 0·1 cc per 200 shots at 1100 rev/min

Injector Nozzle Hole Diameter:

AD3/30 and AD3/49	0·23 — 0·25 mm
AD3/40	0·26 — 0·28 mm
AD3/55	0·28 — 0·30 mm
355011	0·28 — 0·30 mm

Injector Pumps and Injectors:

	CAV No.	DB No.
AD3/30		
Pump	3232938	913430
Nozzle and holder		913431
Injector holder	BKBL 97S5152	904261
Injector nozzle	BDLL 140S6455	913432
AD3/49		
Pump	3232998	916785
Nozzle and holder		913431
Injector holder	BKBL 97S5152	904261
Injector nozzle	BDLL 140S6455	913432
AD3/40		
Pump	3232948	907930
Nozzle and holder		912804
Injector holder		904261
Injector nozzle		912802
AD3/55		
355011		
Pump	3233000	916784
Nozzle and holder		910530
Injector holder	BKBL 97S5152	904261
Injector nozzle	BDLL 140S6417	910080

Oil Pump:

Spindle diameter	0·4895 — 0·490 in	12·43 — 12·45	mm
Spindle bush bore	0·4905 — 0·4925 in	12·458 — 12·509	mm
Rotor width	1·1865 — 1·1855 in	55·537 — 55·511	mm
Housing depth	1·1890 — 1·1875 in	55·600 — 55·833	mm
End float	0·001 — 0·0035 in	0·025 — 0·088	mm
Pump rotor backlash	0·020 — 0·026 in	0·511 — 0·66	mm

Crankshaft:

Main journal diameter			
Standard size	2·4995 — 2·4990 in	63·487 — 63·474	mm
Undersize 0·010 in (0·254 mm)	2·4895 — 2·4890 in	63·233 — 63·220	mm
Undersize 0·020 in (0·508 mm)	2·4795 — 2·4790 in	62·979 — 62·966	mm
Undersize 0·030 in (0·762 mm)	2·4695 — 2·4690 in	62·725 — 62·712	mm

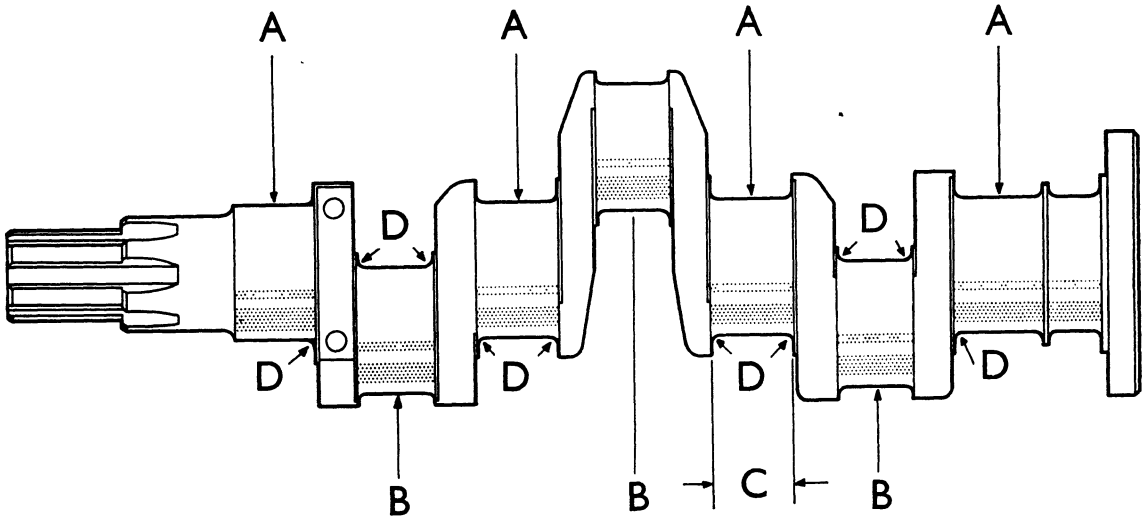

Figure 51. CRANKSHAFT DIMENSIONS

A. Main journal diameters
B. Big end journal diameter
C. Number three journal width
D. Fillet radius

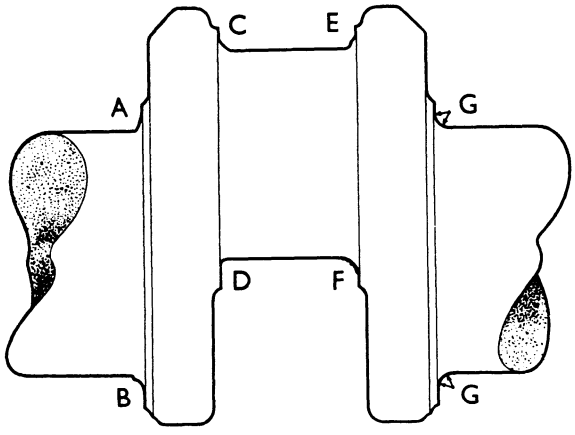

Figure 52. EXAMPLES OF REGROUND FILLET RADII

Incorrect
- **A.** No radius
- **B.** Radius not smoothly blended
- **C.** Radius too large
- **D.** Radius too small
- **E.** Radius too small
- **F.** Radius roughly finished

Correct
- **G.** Correct radius, smoothly finished and correctly blended

When regrinding crankshaft it is important that the original bearing fillet radius is maintained. It is also important that the surface of the radius is as smooth as the surface of the journal and that the radius is smoothly blended into both surfaces. A fillet that is incorrectly radiused, roughly finished or not smoothly blended, weakens a shaft and may cause fatigue failure during service.

Big end journal diameter				
Standard size	2·3735 — 2·3730	in	60·2869 — 60·2742	mm
Undersize 0·010 in (0·254 mm)	2·3635 — 2·363	in	60·0329 — 60·0202	mm
Undersize 0·020 in (0·508 mm)	2·3535 — 2·3530	in	59·7789 — 59·7662	mm
Undersize 0·030 in (0·762 mm)	2·3435 — 2·3430	in	59·5249 — 59·5122	mm
No. 3 main journal width				
Standard size	1·626 — 1·624	in	41·3004 — 41·249	mm
Oversize 0·010 in (0·254 mm)	1·636 — 1·634	in	41·5544 — 41·503	mm
Oversize 0·040 in (1·016 mm)	1·666 — 1·664	in	42·3164 — 42·2656	mm
Bearing fillet radius	0·16 — 0·15	in	4·06 — 3·81	mm
Big end bearing clearance	0·002 — 0·004	in	0·0508 — 0·1041	mm
Main bearing clearance	0·002 — 0·004	in	0·0508 — 0·1016	mm
Crank pin length	1·5015 — 1·4995	in	38·1381 — 38·0873	mm
End float of crankshaft	0·002 — 0·010	in	0·0508 — 0·258	mm
Thrust Washer Thickness:				
Standard	0·091 — 0·093	in	2·3114 — 2·3622	mm
Oversize 0·005 in (0·127 mm)	0·096 — 0·098	in	2·4384 — 2·4892	mm
Oversize 0·020 in (0·508 mm)	0·111 — 0·113	in	2·8194 — 2·8702	mm

Connecting Rod Alignment:

Maximum out of parallel	0·0005 in/in	0·005 mm/cm
Maximum twist	0·0005 in/in	0·005 mm/cm
Maximum weight variation in set of three rods	0·25 oz	7·1 gm

Rocker Shaft:

Diameter	0·748 — 0·749 in	18·99 — 19·02 mm
Bush bore reamed in position	0·7500 — 0·7505 in	19·05 — 19·06 mm

Compression Pressures:

Average pressure obtained when the engine is cranked, by means of the starter motor, with all injectors removed and at an ambient temperature of 20°C (68°F).

Cranking Speed rev/min	Pressure lb/in²	kg/cm²
150	380 — 400	26·6 — 28·0
250	415 — 435	29·0 — 30·5

Camshaft Journal Diameters:

Front	2·3735 — 2·3725	in	60·2869 — 60·2595	mm
No. 2	1·8720 — 1·8707	in	47·5488 — 47·5158	mm
No. 3	1·8422 — 1·8409	in	46·7918 — 46·7588	mm
No. 4	1·7954 — 1·7940	in	45·6031 — 45·5676	mm
No. 5	1·7488 — 1·7475	in	44·4195 — 44·3865	mm
Camshaft end float	0·002 — 0·006	in	0·0508 — 0·1524	mm
Camshaft housing thickness	0·313 — 0·311	in	7·950 — 7·899	mm

SUMMARY OF DESIGN CHANGES

Details of change	When introduced
Gasket fitted between crankshaft oil retainer and cylinder block.	AD3/40A/1007 AD3/40B/1001 (October 1964)
Two $\frac{5}{16}$ in. (7·9 mm) diameter holes drilled through main bearing cap to increase oil drainage into sump.	AD3/40A/1094 AD3/40B/1001 (October 1964)
Simms injectors fitted as alternatives to CAV injectors on a number of engines. Simms and CAV injectors are interchangeable if fitted complete. Nozzles only are not interchangeable.	AD3/40A/1106 to 1129 AD3/40A/1132 to 1155
Simms: Nozzle holder HB97S612; Nozzle NL435 — CAV: Nozzle holder BKBL 97S5152; Nozzle BDLL 140S6445	AD3/40A/1157 to 1168 AD3/40B/1001 to 1022 (December 1964)
Camshaft with high lift cams (Part No. 914527) fitted. Valve clearances reduced to: Exhaust 0·007 in., Inlet 0·010 in.	AD3/40A/3424 AD3/40B/1495 (May 1965)
Prior to the introduction of AD3/49 engines a number of AD3/30 engines were built without sleeves and fitted with $3\frac{1}{16}$ in. (100 mm) diameter pistons. All other components are unchanged.	From AD3/30A/581669 to AD3/30A/581815 (December 1965)
Exhaust manifold drilled to incorporate a water drain pipe.	AD3/49A/1895 AD3/49B/1094 AD3/55A/2704 AD3/55B/1146 (February 1966)
Tappet covers, fuel feed pump and fuel filter fixing bolts changed to studs and nuts to prevent the possibility of oil leakage along the bolt threads.	AD3/49A/2925 AD3/49B/1164 AD3/55A/4578 AD3/55B/1495 (June 1966)
Position of bolt holes in the fan blades relocated at 45° to the centre line of the fan blade.	AD3/55B 1597 onwards AD3/49A 3282 onwards AD3/49B 1207 onwards
Retaining plate fitted between fan blades and spring washers.	AD3/55A 5646 onwards AD3/55B 1571 onwards AD3/49A 3416 onwards AD3/49B 1207 onwards (October 1966)
Engine stop cable redesigned. Adjustment is now at the DPA pump end of the cable.	AD3/49A 585557 AD3/49B onwards AD3/55A 537216 AD3/55B onwards (November 1966)
Heavy duty air cleaner. Seal between the air cleaner body and oil bath bowl redesigned.	AD3/49A 586133 AD3/49B onwards AD3/55A 537883 AD3/55B onwards (January 1967)

Details of change	When introduced
"Hylomar" gasket cement replaced "Hermatite" gasket cement.	AD3/49A 5580 onwards AD3/49B 1420 onwards AD3/55A 9449 onwards AD3/55B 2069 onwards
Ball bearing in the fuel pump bearing housing packed with Filtrate Super Lithium grease.	AD3/49A 5590 onwards AD3/49B 1420 onwards AD3/55A 10208 onwards AD3/55B 2081 onwards (March 1967)
Fuel pump maximum speed control screw sealed with DBT stamp seal.	AD3/49A 4988 onwards AD3/49B 1366 onwards AD3/55A 8773 onwards
Inspection cover on the DPA fuel pump sealed with a CAV seal.	AD3/49A 5795 onwards AD3/49B 1462 onwards AD3/55A 10140 onwards AD3/55B 2120 onwards
Fuel pump bearing housing with three diagonally drilled holes in the upper bearing chamber to prevent condensation.	AD3/49A 5982 onwards AD3/49B 1485 onwards AD3/55A 10660 onwards AD3/55B 2121 onwards
Fuel filter secured to the cylinder block by bolts or setscrews in place of studs and nuts.	AD3/55A 11147 onwards AD3/55B 2206 onwards AD3/49A 5984 onwards AD3/49B 1493 onwards
Lift pump secured to cylinder block by bolts or setscrews in place of studs and nuts.	AD3/55A 10140 onwards AD3/55B 2081 onwards AD3/49A 5590 onwards AD3/49B 1420 onwards
Tappet covers secured also by bolts or setscrews.	AD3/55A 9447 onwards AD3/55B 2010 onwards AD3/49A 5317 onwards AD3/49B 1399 onwards
Cap nut and sealing washer replace former locknut and rolled copper washer.	AD3/49A 5984 onwards AD3/49B 1493 onwards AD3/55A 11199 onwards AD3/55B 2206 onwards
Method of attaching beading to the side of radiator changed to a metal lug fixing.	AD3/49A, AD3/49B Tractor Number 587213 onwards AD3/55A, AD3/55B Tractor Number 541240 onwards
Radiator redesigned and fitted with a fan cowl. Radiator of gilled tube construction.	AD3/49A, AD3/49B Tractor Number 587511 onwards (April 1967)
Cylinder head gasket material changed from copper asbestos sandwich to a reinforced asbestos gasket with metal insert and graphite finish.	AD3/55A 11884 onwards AD3/55B 2257 onwards AD3/49A 6158 onwards AD3/49B 1523 onwards (May 1967)

Details of change	When introduced
Oil seal at rear of the crank changed from a return scroll to a positive contact seal 962319.	AD3/49A 6876 onwards AD3/49B 1595 onwards AD3/55A 14777 onwards AD3/55B 2551 onwards 355011 1324 onwards (November 1967)
Nut locating boxes on cylinder head cover increased $\frac{1}{4}$ in. Two new studs 3 in. long.	AD3/49A 7026 onwards AD3/49B 1595 onwards AD3/55A 15434 onwards AD3/55B 2556 onwards 355011 1624 onwards
Engine breather direct into the atmosphere and not into the air cleaner.	AD3/55A 15561 onwards AD3/55B 2556 onwards
Oil pump shaft counter bored to accommodate thrust spring between quill shaft and oil pump shaft.	AD3/49A 7026 onwards AD3/49B 1595 onwards AD3/55A 15403 onwards AD3/55B 2551 onwards 355011 1873 onwards
Engine breathing direct to atmosphere.	AD3/49A 7589 onwards AD3/49B 1609 onwards (March 1968)
Black Nylon hand throttle control cable, $\frac{1}{8}$ in. diameter.	AD3/55A, AD3/55B Tractor Number 547574 onwards
Starter mounting on flywheel housing re-designed.	AD3/55A 17416 onwards AD3/55B 2611 onwards (April 1968)
Commonisation of camshaft gears.	AD3/55A 17418 onwards AD3/55B 2615 onwards 355011 2551 onwards AD3/49A 7867 onwards AD3/49B 1627 onwards
Black Nylon foot throttle control cable, $\frac{1}{8}$ in. diameter.	AD3/49A, AD3/49B Tractor Number 589416 onwards AD3/55A, AD3/55B Tractor Number 547832 onwards 355011 Tractor Number 601354 onwards (May 1968)
Common 3- and 4-cylinder engine piston assemblies.	AD3/55A 17839 onwards AD3/55B 2666 onwards AD3/49A 7789 onwards AD3/49B 1627 onwards 355011 2551 onwards (June 1968)
Black Nylon hand throttle control cable, $\frac{1}{8}$ in. diameter.	355011 601660 onwards AD3/49A 589645 AD3/49B onwards (July 1968)

Details of change	When introduced
Introduction of fuel filter water trap as an optional part number 7135-55 for 3 cylinder engines.	AD3/55A and B AD3/49A and B (September 1968)
Introduction of 7-blade fan and gilled tube radiator.	AD3/55A 550128 AD3/55B onwards
Introduction of combined engine speed indicator and hour counter.	AD3/49A AD3/49B AD3/55A AD3/55B 355011 } October 1968
3 in. longer tractormeter cable.	AD3/55A } Tractor Number AD3/55B } 350153 onwards AD3/49A { Tractor Number 590165 onwards (October 1968)
Introduction of cup type core plugs in place of the old type welch plugs.	AD3/55A 22424 onwards AD3/55B 2876 onwards 355011 4374 onwards AD3/49A 9396 onwards AD3/49B 1850 onwards (April 1969)
Timing cover dowels discontinued in favour of centralising cover on crankshaft centre line.	355011 4576 onwards AD3/55A 23078 onwards AD3/55B 2890 onwards AD3/49A 9581 onwards AD3/49B 2890 onwards (June 1969)
Threads changed from BSF to UNF on manifold and ether plug.	AD3/55A 23901 onwards AD3/55B 2972 onwards 355011 5258 onwards AD3/49A 9831 onwards AD3/49B 1982 onwards (July 1969)
Commonisation of 3-cylinder valve gear with 4-cylinder.	AD3/55A 24858 onwards AD3/55B 2984 onwards 355011 5973 onwards 355012 1001 onwards AD3/49A 9970 onwards AD3/49B 1879 onwards (September 1969)
Common inlet and exhaust valves with tappet settings of 0·010 in. (0·25 mm).	AD3/55A 25306 onwards AD3/55B 2984 onwards 355011 6039 onwards 355012 1001 onwards AD3/49A 9970 onwards AD3/49B 1879 onwards (October 1969)

Details of change	When introduced		
Water pump greaser deleted.	AD3/55A		2993 onwards
	AD3/55B		3170 onwards
	355011		10797 onwards
	355012		1030 onwards
	(November 1970)		
Introduction of aluminium tin upper main bearing shells and thrust washers.	AD3/55A	Bearings	27332 onwards
	AD3/55B		3005 onwards
	AD3/49A		10390 onwards
	AD3/49B		1879 onwards
	355011		7650 onwards
	355012		1021 onwards
	AD3/55A	Thrust	26850 onwards
	AD3/55B	washer	3005 onwards
	AD3/49A		10390 onwards
	AD3/49B		1879 onwards
	355011		7344 onwards
	355012		1021 onwards
	(December 1970)		
Oil scroll machined on crankshaft at rear bearing.	AD3/55A		28781 onwards
	AD3/55B		3077 onwards
	AD3/49A		10525 onwards
	AD3/49B		1879 onwards
	355011		9534 onwards
	355012		1031 onwards
	(March 1971)		
Inlet valve seal modified to prevent damage when fitting.	AD3/55A		32563 onwards
	AD3/55B		3333 onwards
	355011		12826 onwards
	(July 1971)		

APPROVED LUBRICANTS

OVERSEAS

Lubricants

Application	A.P.I. Classn.	Air Temp.	GRADE Recomm.	GRADE Alternative	AMOCO	B.P.	CASTROL	ESSO	MOBIL	SHELL
Engine and Air Cleaner	DG, MS, DM	Below —7°C (20°F)	Multi-purpose 10W/30	SAE 10W	AMERICAN HD – M Motor Oil 10W – 30	Tractor Oil Universal	Agricastrol Multi-use 10W/30	Esso Tractorlube Universal 10W/30	Mobiloil Super	Rotella M Multigrade 10W/30
	DG, MS, DM	—7°C to 32°C (20°F to 90°F)	Multi-purpose 20W/30 or 20W/40	SAE 20W	AMERICAN HD – M Motor Oil 20W – 30 or 20W – 40	Tractor Oil Universal	Agricastrol Multi-use 20W/30	Esso Tractorlube Universal 20W/30	Mobiloil Super 20W/50	Rotella M Multigrade 20W/40
	DG, MS, DM	Above 32°C (90°F)	Multi-purpose 20W/30 or 20W/40	SAE 30						
Details of Alternative Grade Oils			SAE 10W		AMERICAN HD – M Motor Oil SAE 10W	BP Vanellus SAE 10W	Castrol CRI10 or Agricastrol 10	Essolube HD10W	Mobiloil 10W or Delvac Oil 1210	Rotella S 10W
			SAE 20W		AMERICAN HD – M Motor Oil SAE 20-20W	BP Vanellus SAE 20W	Castrol CRI20 or Agricastrol 20	Essolube HD20	Mobiloil Arctic or Delvac Oil 1220	Rotella S 20/20W
			SAE 30		AMERICAN HD – M Motor Oil SAE 30	BP Vanellus SAE 30	Castrol CRI30 or Agricastrol 30	Essolube HD30	Mobiloil A or Delvac Oil 1230	Rotella S 30

Engine oil: Under normal operating conditions the engine oils should be marked with viscosity grade and API classification as shown in the above table. Oils marked with service classification DM are recommended when one or more of the following conditions is present:—abnormally high operating temperatures, intermittent operation at low temperatures or fuel contains more than 1% sulphur.

Air cleaner: Where possible a straight mineral oil should be used as an alternative to engine oil to avoid frothing.

Fuel, Grease and Anti-freeze

Diesel fuel: For temperature above 0°C (32°F) use No. 2D fuel (ASTMD 975) with a minimum cetane rating of 45.

For temperature below 0°C (32°F) use No. 1D fuel (ASTMD 975) with a minimum cetane rating of 50.

Note: For low temperature operation a fuel with a pour point 6°C (10°F) below lowest starting temperature should be specified. Fuels with not more than 0·5% by weight sulphur should be used when available. A high sulphur content fuel requires an engine lubricating oil with high detergent characteristics to prevent carbon build up in the nozzles and combustion chambers and to neutralise the acid created by sulphur.

Greasing points: A good quality multi-purpose grease should be applied to all grease fittings (except water pump which requires a high melting point grease applied sparingly every 500 hours). High melting point grease may be used for all fittings except those which require oil.

Anti-freeze solutions for engine coolant: Use only a brand formulated for use in diesel engines to British Standard 3151 (1959) type B (or equivalent) which specifies a corrosion inhibited ethanediol anti-freeze. (Sodium benzoate and sodium nitrite inhibited.)

BRITISH ISLES

Lubricants

APPLICATION	GRADE Recommended	Alternative	AMOCO	B.P.	CASTROL	ESSO	MOBIL	SHELL
Engine & Air Cleaner	Multi-purpose Oil	SAE 20/20W	Super VITAMATIC Motor Oil SAE 20W–30	Tractor Oil Universal	Agricastrol Multi-use	Esso Tractorlube (Universal)	Mobiland Universal	Tractor Oil Universal
Alternative Grade Oils	SAE 20/20W		AMERICAN HD – M Motor Oil SAE 20–20W	BP Vanellus SAE 20	Castrol CRI20 or Agricastrol 20	Essolube HD20	Mobiloil 20W/20 or Delvac Oil 1220	Rotella S 20/20W or Super TOU

Fuel, Grease and Anti-freeze

Diesel fuel: Farm diesel fuel of high quality is recommended for use in David Brown Engines. Fuels with not more than 0·5% by weight sulphur should be used when available. A high sulphur content fuel requires an engine lubricating oil with high detergent characteristics, to prevent carbon build up in the nozzles and combustion chambers, and to neutralise the acid created by sulphur.

Greasing points: A good quality multi-purpose grease should be applied to all grease fittings (except water pump which requires a high melting point grease applied very sparingly every 500 hours). A high melting point grease may be used for all fittings except those which require oil.

Anti-freeze solution for engine coolant: Use only a brand formulated for use in diesel engines to British Standard 3151 (1959) type B (or equivalent) which specifies a corrosion inhibited ethanediol anti-freeze. (Sodium benzoate and sodium nitrite inhibited.)

(Revised August 1971)

Gasoline Engine
3 Cylinder

THREE CYLINDER GASOLINE ENGINE

CASE CORPORATION

Pub 9-37111

PRINTED IN U S A

Introduction

This manual covers the maintenance and repair of gasoline engines fitted in David Brown 4600 and 3800 Selectamatic Tractors. As the 4600 Tractor is a gasoline engined version of the David Brown 880 Diesel Tractor and the 3800 Tractor a gasoline engined version of the David Brown 780 Diesel Tractor, Repair Manual TP 619 is also applicable to the clutch, transmission and hydraulic system, etc., of 4600 and 3800 Tractors.

Engine Designation and Tractor Models

Engine Series	*Tractor Model*	*Tractor Number*
349101	**3800 Selectamatic Livedrive**	**650001 onward**
355101	**4600 Selectamatic Livedrive**	**900001 onward**

CONTENTS

SECTION	Page
Maintenance	2
Fuel System	6
Ignition System	13
Distributor	14
Lubrication System	16
Cooling System	20
Repair Operations	
Engine Tune	22
Decarbonising	23
Pistons and Connecting Rods	25
Crankshaft and Bearings	26
Timing Gears	27
Governor	30
Engine Removal	34
Dimensional Data	36
Summary of Design Changes	41
Approved Lubricants	42

MAINTENANCE

Daily

Check engine oil level. Top up if necessary.

Check air cleaner. Remove filter bowl and examine the oil. In dusty conditions the air cleaner oil should be changed frequently, the detachable wire mesh element removed, washed in kerosene, and allowed to stand until all oil has drained off. (See note regarding air cleaner maintenance.)

If a paper element pre-cleaner is fitted, remove the cover and examine the element. If it is dirty, remove the element and tap it on the side to shake off dust. (Fig. 1.). **Do not attempt to wash a paper element.** Examine for any water, fuel or lubricating oil leaks.



Figure 1. PAPER ELEMENT PRE-CLEANER

Every 60 hours

Check engine oil level. Top up to the "full" mark on dipstick if required.

Check radiator water level and top up to within 1 in. (2·5 cm) from top if required. If the engine is hot, remove radiator cap slowly as the system is pressurised and may scald the hand if opened quickly.

Visually check the feed pump sediment bowl. Remove and clean if there is any accumulation of dirt or water.

Air Cleaner

Air Cleaner Oil: Air cleaner oil should be changed and the detachable wire mesh element removed and in dusty conditions washed frequently. The maximum dust deposit in the cleaner bowl should never be allowed to exceed $\frac{1}{4}$ in., checked after standing overnight, otherwise oil pullover into the induction manifold will take place, due to the raised oil level. This pullover is highly detrimental and must be prevented by adequate cleaner maintenance.

An SAE 30 grade of straight mineral oil is less susceptible to frothing, and usually cheaper, than the detergent oils used in the engine. In climates where the ambient temperature often exceeds 32° C (90° F) an SAE 50 grade oil may be used. Care should be taken not to overfill the bowl. Only fill to the level mark — not above or below it.

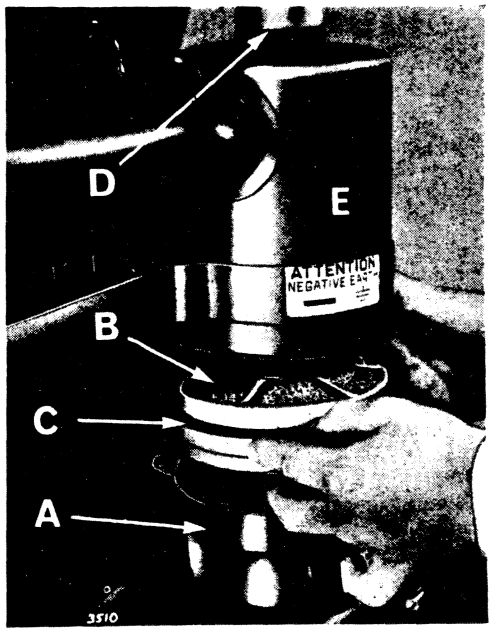

Figure 2. AIR CLEANER

A. Oil bowl **B.** Wire mesh **C.** Rubber sealing rings
D. Cleaner inlet pipe **E.** Cleaner body

Air Cleaner 'O' Rings: When assembling the air cleaner care should be taken to ensure that the 'O' rings between the cleaner body, lower element and oil bowl are correctly fitted to ensure an air-tight seal. The fit of these 'O' rings is particularly important, as the upper ring may be easily displaced when the oil bowl and lower element are being fitted. The 'O' ring should not be twisted and should fit securely on the small notched register on the lower edge of the air cleaner body. If the 'O' rings are damaged during assembly new rings must be fitted. (Fig. 2.)

Paper Element Pre-cleaner

This is an alternative fitting to the centrifugal type pre-cleaner and incorporates a replaceable paper

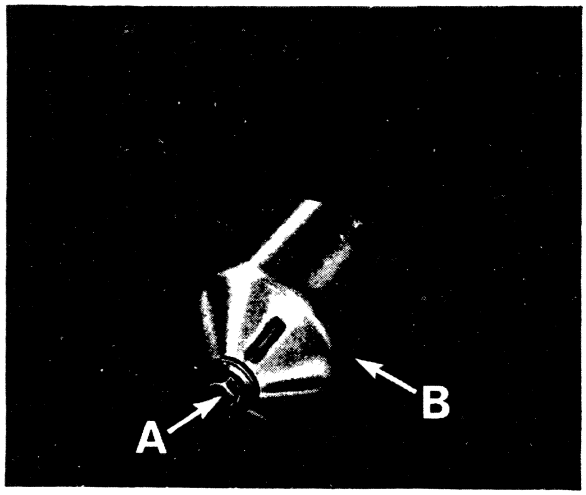

Figure 3. ENGINE OIL FILTER

A. Securing bolt **B.** Filter bowl

element. Frequency of attention depends on working conditions and in dusty climates the cover should be removed every few hours of use and the element examined. The element can be cleaned by tapping its side to shake off the loose dust. If the element becomes very dirty, or contaminated with oil or water, it should be renewed. **Do not attempt to wash an element.**

Every 125 hours

Engine Oil: Drain the oil, while it is still warm, through the sump plug on the underside of the sump plate. Refill with approved oil to within the safe marks on the dipstick. For list of approved lubricants see Page 42.

Every 250 hours

Engine Oil and Filter: Drain the oil when warm and remove filter bowl. Discard the old element and clean bowl out with clean kerosene, using a brush to make sure that the by-pass valve is perfectly clean. Fit a new element and check the sealing ring in the cylinder block groove; fit a new ring if it is damaged or distorted. Do not overtighten the bowl securing bolt — 10 lb ft is sufficient. (Fig. 3.)

Refill the sump with new oil, start engine to fill the filter then recheck the oil level.

Distributor: Remove the contact-breaker points and clean the contact faces. Renew the points if badly pitted After refitting the points turn the engine until the points are fully open then set the gap to 0·020 in.

Apply a small quantity of high-melting-point grease to the cam and a few drops of oil into the centre of the shaft and through the oil-holes in the baseplate. (Fig. 4.)

Replace the rotor and distributor cap. Wipe all oil and dirt from the ignition coil, distributor cap and high-tension wiring.

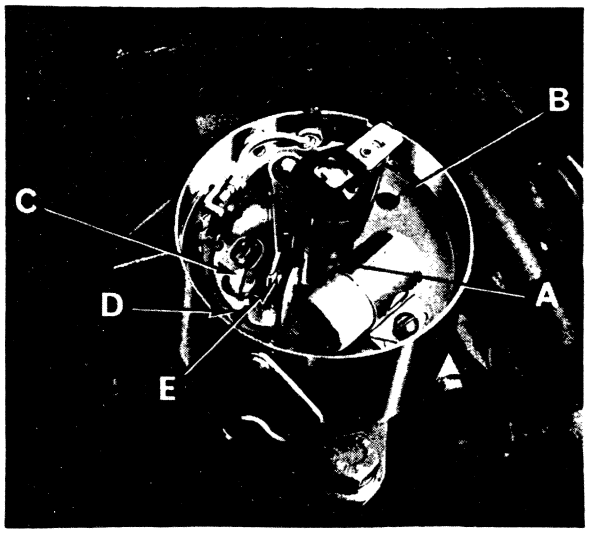

Figure 4. DISTRIBUTOR

A. Cam **B.** Oil hole **C.** Fixed point screw
D. Screwdriver slot **E.** Contact points

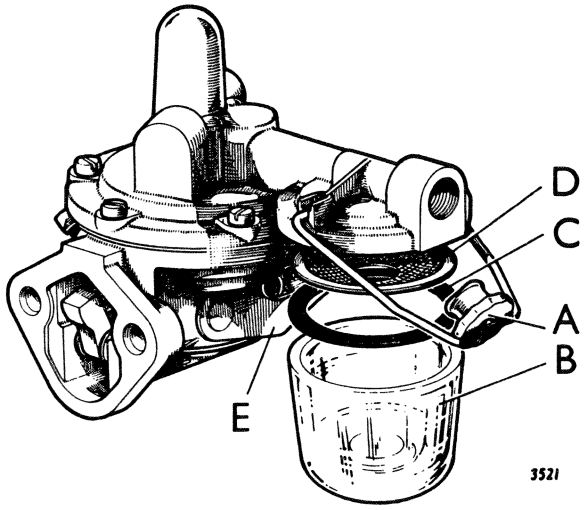

Figure 5. FUEL FEED PUMP SEDIMENT BOWL

A. Bowl securing nut **B.** Sediment bowl
C. Sealing ring **D.** Filter screen
E. Pump priming lever

Spark Plugs: Remove, clean and re-set the gaps to 0·025 in. by adjusting the side electrode. Do not attempt to bend the centre electrode.

Every 500 hours

Sediment Bowl: Remove the sediment bowl and filter screen, wash in gasoline and replace. (Fig. 5.)

Spark Plugs: Remove the spark plugs and fit a new set of plugs of the correct type (see Page 39). Set the plug gaps to 0·025 in. before fitting.

Valve Clearance: Remove valve rocker cover and check valve clearances when engine is cold. The valve clearance should be set cold to inlet 0·010 in. and exhaust 0·007 in. The clearance between the tip of rocker arm and the end of valve stem should be checked with a feeler gauge as

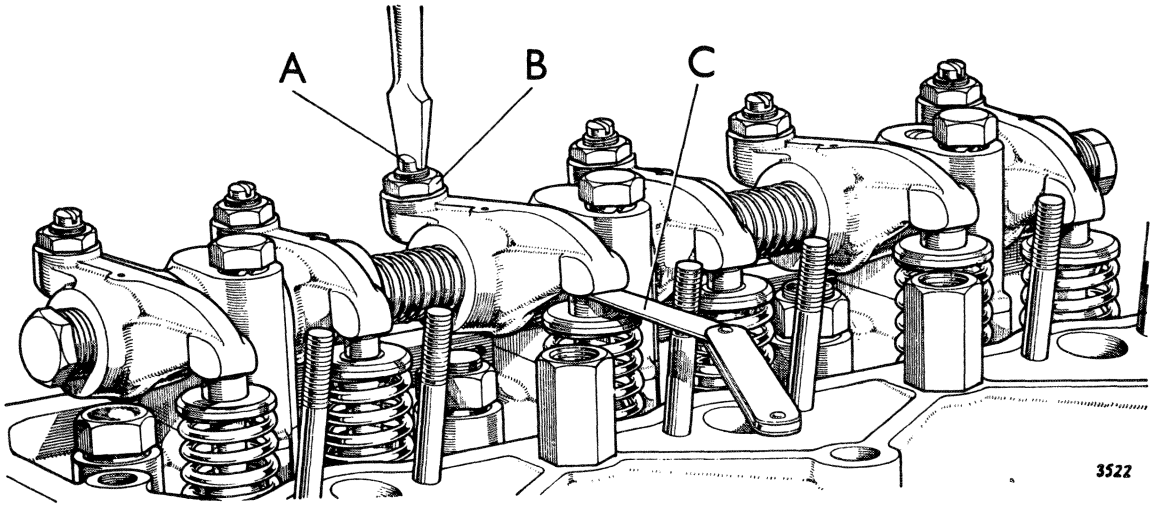

Figure 6. SETTING THE VALVE CLEARANCES

A. Adjusting screw **B.** Locknut **C.** Feeler gauge

shown on Fig. 6 and adjusted, if necessary, to the correct clearance. Adjustment is made by slackening the locknut and turning the adjusting screw until correct clearance is obtained. When tightening the locknut hold adjusting screw firmly with a screwdriver, then re-check the clearance. As it is important that the tappet is on the base of the cam when valve clearance is set, the valves should be adjusted in the manner described below. (Fig. 6.)

Relative position of valves is as follows:

No. 1 Cylinder (Front)		**No. 2 Cylinder** (Centre)		**No. 3 Cylinder** (Rear)	
Exhaust	Inlet	Exhaust	Inlet	Exhaust	Inlet

Using a $\frac{15}{16}$ AF socket and suitable bar, turn engine slowly forward and observe which exhaust valve is closing and continue turning until the inlet valve of the same cylinder starts to open. When these two valves are open by the same amount stop turning. It is possible to turn the engine backwards and forwards to attain the correct point. This position is known as having the valves "rocking". Set the clearance of the corresponding valves and repeat the procedure on the other two cylinders.

Order of Valve Setting:

Valves Rocking	**Set Valves**
No. 1 cylinder	No. 2 inlet and No. 3 exhaust
No. 2 cylinder	No. 3 inlet and No. 1 exhaust
No. 3 cylinder	No. 1 inlet and No. 2 exhaust

Fan Belt: Check tension by deflecting belt midway between the dynamo and crankshaft pulleys. It should deflect approximately 1 in. and if necessary may be adjusted by releasing the three dynamo mounting bolts and swinging dynamo on the two lower bolts. Tighten upper bolt first, as this will hold dynamo in position whilst the lower bolts are tightened. Do not overtighten the belt. A taut belt will place excessive load on the dynamo and water pump bearings and cause rapid belt wear. If the belt has insufficient tension when dynamo has been

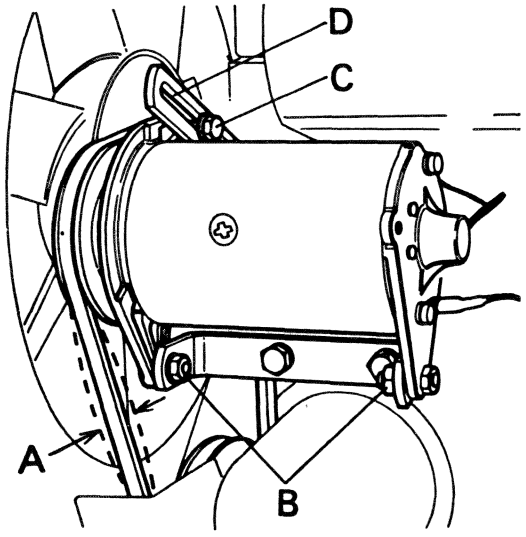

Figure 7. FAN BELT ADJUSTMENT

A. Belt deflection (1 in.) **B.** Lower mounting bolts
C. Upper mounting bolt **D.** Adjustment slot

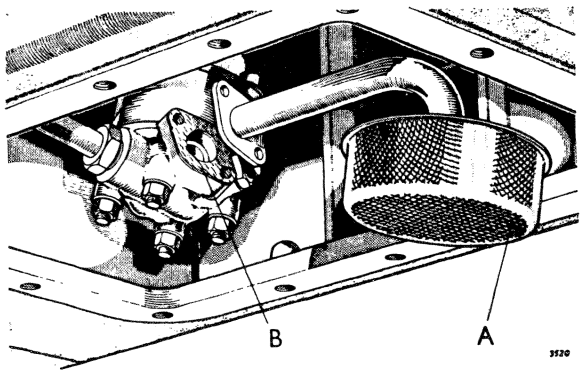

Figure 8. ENGINE OIL PUMP SCREEN

A. Filter screen **B.** Gasket

adjusted so that the upper mounting bolt is at end of arm slot, the belt should be renewed. (Fig. 7.)

Water Pump: Apply high-melting-point grease sparingly to the pump grease nipple. A few strokes of the grease-gun are all that is required. Over-greasing will damage the seals and cause eventual bearing failure.

Dynamo: Remove small rubber plug from the centre of dynamo rear end plate, inject a few drops of engine oil through the hole and replace the plug.

Air Cleaner: If a paper element pre-cleaner is fitted, remove the cover and filter element. Discard the filter element, wipe the inside of the cover, fit a new paper element and replace the cover.

Every 1000 hours

Engine Oil Pump: Drain the oil and remove sump cover. Remove setscrews attaching inlet pipe to oil pump and remove pipe and gauze. Clean the wire gauze with kerosene. Do not use a cloth. Refit gauze and pipe using a new gasket. It is essential that an airtight joint is obtained. (Fig. 8.) Refit sump cover and plug; fill with new oil of the correct grade (see Page 40).

FUEL SYSTEM

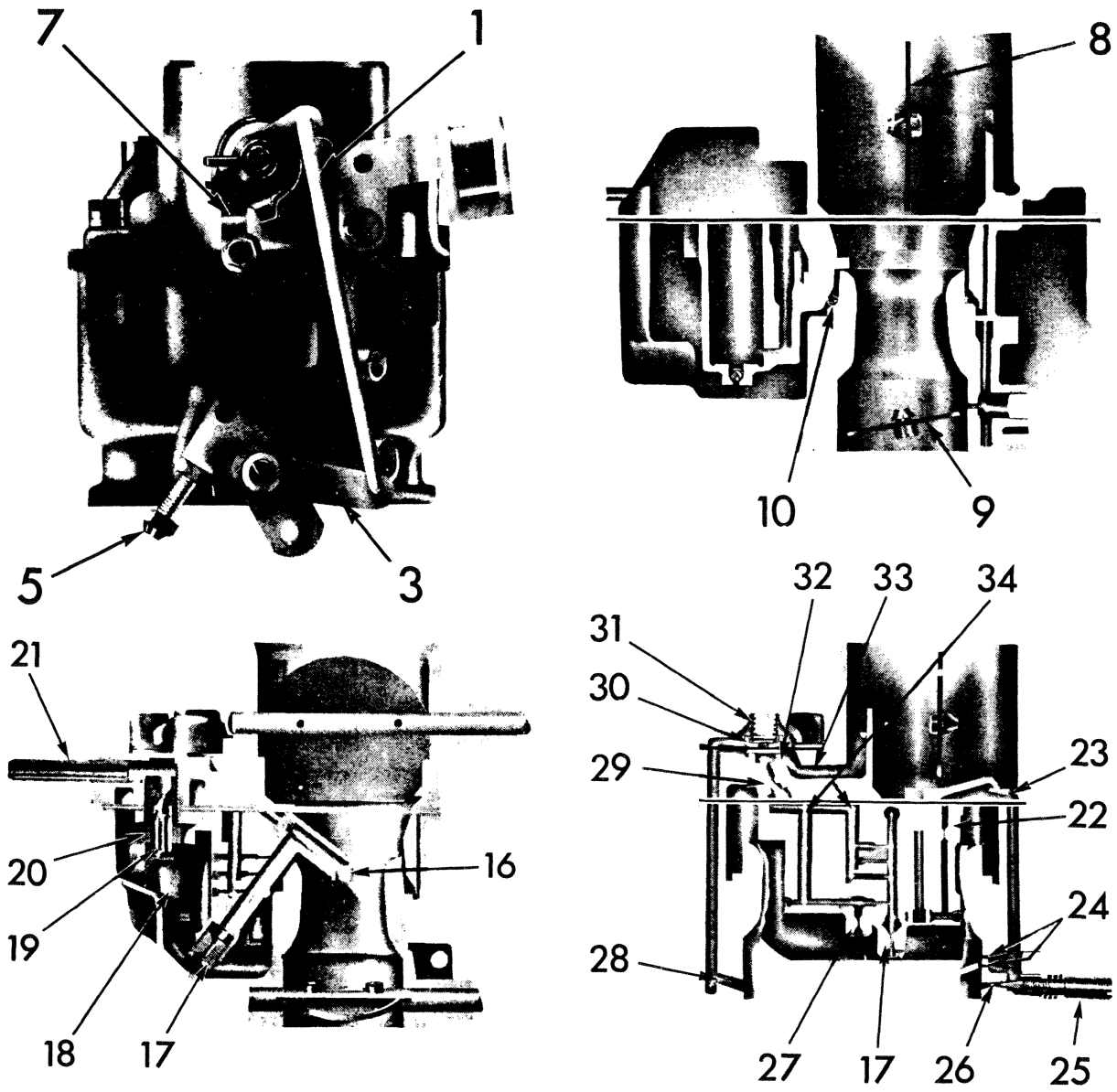

Figure 9. DIAGRAMS OF CARBURETTER
For references see text

The Carburetter

Description: The Zenith series IV carburetter is of single choke down-draught design and fitted with twin floats in a chamber set close to the throttle bore so that the fuel level is not affected by angles of incline. The float chamber has no screws or plugs on the exterior and is cast in one piece with the throttle barrel, thus eliminating any joint below the fuel level. (Fig. 9.)

The emulsion block, or jet carrier, has an outlet in the centre of a lead-in to the choke restriction that is cast in the barrel portion of the carburetter. All jets are in the emulsion block, which can be readily removed with a screwdriver and a $\frac{7}{16}$ AF spanner.

Operation: The fuel inlet 21 is at the top of the floatchamber. From here, fuel enters the float-chamber via the needle seating 20, where the flow is controlled by the needle 19, and the float 18. As the fuel level rises, the float lifts, and by means of the arm connecting the twin floats, closes the needle on its seating, when the correct level has been attained. When the engine is running, the float descends and more fuel is then admitted through the needle seating. By this means, the

correct level is automatically maintained.

Fuel in the floatchamber surrounds the emulsion block which houses the main jet 17, compensating jet 27, slow-running jet 22 and fuel will pass through jets and channels to the same level as exists in the floatchamber.

Starting from Cold: When the choke control is pulled out it operates a lever 7 at the side of the air intake. This allows the spring-loaded strangler, or choke spindle, to which the strangler flap 8 is affixed, to rotate and close the air intake; simultaneously, the interconnection rod 1, between the strangler lever and a loose lever 3 on the throttle spindle opens the throttle, beyond the normal idle position to provide fast-idle.

The increased depression in the carburetter when the engine starts, will open the strangler flap against the spring action that held the flap closed preparatory to starting. Thus the mixture is weakened to avoid over-choking once the engine is running.

Idling: When the throttle 9 is in the idling position, the mixture is supplied by the slow-running jet 22, which obtains its fuel from the metered side of the main jet 17 (at the base of the emulsion block), through a calibrated restriction. The fuel from the jet is emulsified by air bleeding to the vertical channel, through the orifice 23, which opens into the air intake. The resulting mixture is then drawn down the channel to the idle hole 26, in which the tapered end of the volume control screw 25 enters.

Adjustments to the idling are made by both the throttle stop screw 5 and the volume control screw 25. Turning the throttle stop screw clockwise increases the speed of idling and turning the volume control screw clockwise weakens the idling mixture.

The two small holes 24. at the edge of the throttle, communicate with the idle channel. Their function is to provide additional mixture as the throttle is opened from the idle position and before fuel commences to emerge from the outlet of the main carburetter. They are known as progression holes and ensure smooth progressive acceleration. They are not adjustable and should not be tampered with.

The Main Circuit: As the throttle continues to open, increased depression in the waist of the choke tube restriction, on which is located the outlet from the emulsion block, will cause fuel to issue from the outlet that is fed by the main and compensating jets 17 and 27 respectively. As the fuel level in the channels above the jets falls, air will enter the top of the capacity wells 34, to the compensating jet and to the channel above the main jet. The amount of air bleeding is controlled by the full throttle air bleed hole 32 (which remains permanently open) and also at times by the larger orifice in the ventilation screw 29, this being controlled by the economy diaphragm valve 30.

Consequently fuel from the outlet of the emulsion block will be mixed with air which, when it arrives at the outlet 16, is further atomised as it meets the current of air passing through the choke tube, or venturi restriction, in the bore of the carburetter.

Economy Device: On the floatchamber cover adjacent to the air intake is a small casting attached by three screws. Under the cover is a diaphragm valve 30 which is normally held in a flexed condition by a compression spring. The chamber above the diaphragm is in communication via a hole in the cover and a channel in the body to an outlet 28, in the throttle bore on the engine side of the throttle.

Under part throttle cruising conditions the manifold depression is high. This depression (or "suction") is imposed on the spring-loaded side of the diaphragm, thereby lifting the valve from its seat, to admit further air from the passage 33, in communication with the air intake, to increase ventilation to the jets and weaken the mixture in order to ensure the best possible consumption figures. With the valve off its seating, under conditions of high manifold depression, the extent of the ventilation for cruising is controlled by the ventilation screw 29.

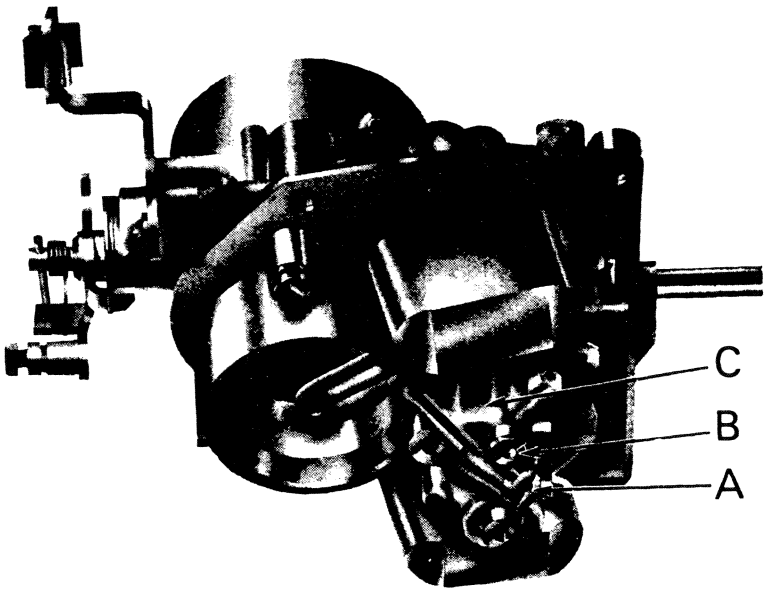

Figure 10.

CARBURETTER COVER

A. Main jet

B. Compensating jet

C. Emulsion Block

When depression in the manifold is low, as at wide throttle openings, and maximum power is required, the diaphragm valve remains on its seating and the extent of ventilation to the jets is restricted to the small "Full Throttle Air Bleed" 32, into the channel below the valve.

The action of the economy device is entirely automatic and is controlled by the demands of the engine.

General: To gain access to the emulsion block and float mechanism, remove the four screws in the top half of the carburetter and disconnect the linkage after removing the split pin, when the top half can be lifted off.

The main and compensating jets in the base of the emulsion block have screw-driver slots and can be taken out for cleaning without further dismantling. The jet at an angle is the main jet and the compensating jet is vertical.

These two jets are cadmium plated, in order to distinguish them from other jets of similar size and shape but which have a plain brass finish. Although the two types appear to be identical, their flow characteristics are entirely different, hence it is important that plated main and compensating jets **only** are used in this carburetter. No washers are needed on these jets.

To remove the emulsion block after taking off the top half, first slide out the float hinge pin in either direction and lift away the float. The fuel inlet needle can then be lifted from its seating. Two screws with spring washers and the needle seating are next removed when the emulsion block can be lifted clear. See Fig. 10. Take care not to lose the soft aluminium washer that ensures a fuel tight joint for the seating on the under surface of the emulsion block.

Surrounding the spigotted top end of the choke restriction there is a rubber 'O' ring 10, to provide a seal with the emulsion block, when the top half with the block is refitted in position. In dismantling the carburetter examine the 'O' ring to ensure it is sound and if in any doubt replace.

With the emulsion block removed from the top half there are exposed a number of drillings in the cover and it is essential all are clear, pay particular attention to those which break through into the air intake of the instrument. (Fig. 11.)

In reassembling the top half, see the gasket lines up with the drilled holes in the underside of the cover. Place the block in position on the cover and screw in the needle seating, then fit the screws with their washers and tighten all these evenly and fully. Next drop the needle in its seating and fit the float by sliding in position the axle pin. There is no fixing for the pin as end movement is limited by the interior of the floatchamber, when the top half is in position.

While the top half is off, dismantle the economy device by removing the three screws and lifting off the small die-cast cover. A gasket is used on each side of the diaphragm.

Choke Tube: This is cast in the throttle body and cannot be varied.

Main Jet: The mixture at speeds above idling is provided by two jets, the main jet and compensating jet. Both these feed simultaneously into the main channel of the emulsion block, the outlet from which protrudes into the choke tube at its smallest diameter.

The main jet will influence power and speed; when the drilling or passage above this jet is exhausted of fuel, the output will be related to the depression existing in the choke tube and then, in turn, to that in the main passage of the emulsion block.

Compensating Jet: As already mentioned in reference to the main jet, the output of the compensating jet is complementary to that of the main jet, both feeding into the main channel of the emulsion block. The head of the channel in which the compensating jet screws is ventilated to the atmosphere by means of the main air bleed, while the fuel and air flow from the compensating jet is through the restriction near the base of the drilling in which the compensating jet screws. Thus, when fuel above the compensating jet is exhausted on acceleration, an emulsion of fuel and air will be drawn through this restriction into the main passage of the emulsion block.

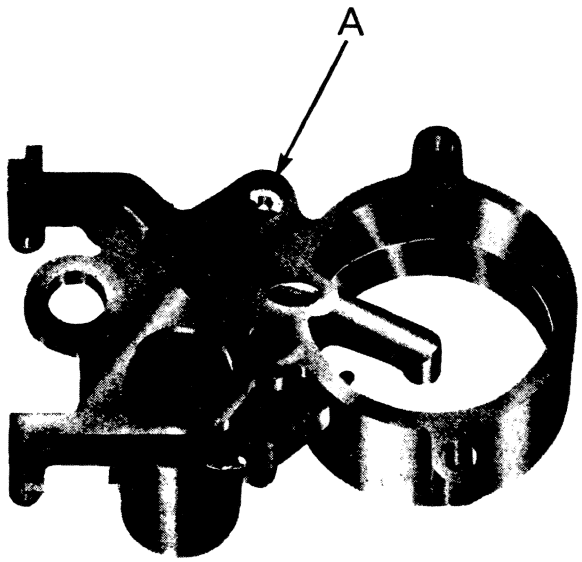

Figure 11. EMULSION BLOCK
A. Slow-running jet

As in the case of the main jet, the compensating jet will feed fuel at all times (other than idling) to the main outlet of the emulsion block, and consequently any variation to the size of this jet will have an influence on mixture strength throughout the throttle range. It is therefore the combined output of the main and compensating jets that provide the mixture strength to give the best performance.

Variations to the size of the compensating jet will not have so great an influence on mixture strength as will an alteration to the main jet.

Slow-running Jet: Its name indicates the purpose of this jet, which has a calibrated hole and meters the fuel to both the slow-running hole on the engine side of the throttle, and to the two small

"progression" holes at the throttle edge. Half-size slow-running jets are unnecessary, as the volume control screw in the throttle barrel enables the strength of the mixture to be regulated.

Slow-running Air Bleed: The drilled hole 23 from the slow-running passage into the air intake, bleeds air to the circuit and serves also as an anti-syphon hole.

Ventilation Orifice 29: At part throttle operation when manifold depression is high the diaphragm 30 will be off its seating to open the orifice under the metal insert of the diaphragm and admit air from the channel 33. The ventilation orifice will then control the degree of air bleeding to the compensating jet, also to the cross channels drilled into the main passage of the emulsion block, just above the main jet.

At full throttle or when manifold depression is low the air bleed through the ventilation screw is limited by the air having to pass through the small full throttle air bleed orifice 32, as the diaphragm 30 will be closed on its seating by the spring 31.

Increasing the air bleeding by fitting a larger ventilation screw will weaken the mixture by reducing the depression on the main and compensating jets.

By variation to the ventilation screw, it is possible to alter the mixture ratio between low and high speeds at part and full throttles.

Any alteration to the size of the screw will affect the mixture strength over the whole speed range, but will have a greater influence at high speeds, when the depression in the waist of the choke tube is at its maximum.

Interconnection for Cold Starting: The degree of throttle opening when the strangler is closed is preset by the length and set of the rod 1. The only way to alter this is to set or bend the interconnection rod.

Fuel Level: This is set at the factory 15·5 mm down from the top edge of the floatchamber.

It should be explained that this level is that which should result when the top half carrying the float is in position on the carburetter, and the float is holding the needle closed against the pressure in the fuel line. When the top half is taken off and the float is lifted out of the chamber the level will fall.

To check the level remove the top half and leaving the float in position reverse the cover so that the float arm closes the needle, then measure from the face of the gasket to the highest point of the float, which should be 32–33 mm.

The level can be altered by bending carefully the tag on the float arm that contacts the end of the needle or an easier method is to vary the thickness of the washer under the needle seating; a thicker or an additional washer lowers the level.

Needle Valves and Seatings: These are calibrated in millimeters, the size being stamped on one of the flats of the hexagon. This size depends on the fuel pump pressure and the capacity and power of the engine.

General: In any investigation of suspected faulty carburation, first of all check through the instrument to ensure the specification, which includes choke tube, jet and air bleed sizes, is correct for the particular application. (See Page 36.)

Whilst it is important to ensure that jets have the right numbers stamped on them, the possibility should not be overlooked that a jet may have been tampered with, or careless cleaning has affected the flow of fuel or air through a jet or air bleed. If, therefore there is any indication that any of these have been interfered with, a new part of the correct size should be fitted.

Difficult Starting from Cold: Make sure there is fuel in the floatchamber, and that fuel from the pump flows through the needle seating within a few seconds of rotating the engine by the starter, or by operation of the hand primer on the fuel pump.

Cases are encountered where sediment or gum cause the needle to stick on its seating, thus preventing the entry of fresh fuel when attempting to start. This will explain difficult starting, as fuel in the floatchamber when the engine is switched off may have evaporated after standing for several hours.

If a sticking needle is suspected, remove the top half and operate the needle with the finger. Any tendency for the needle to remain closed can usually be overcome by rinsing the needle and seating in methylated spirit. This will dissolve sediment or gum deposit.

Ensure that the strangler flap in the air intake closes completely when the choke control is operated. From examination of the choke control on the carburetter it will be seen there is no mechanical connection between the strangler control wire and the spindle on which the strangler flap is fitted.

Movement of a cam lever on the side of the air intake permits the spring loading of the strangler spindle and arm to close the flap in the air intake: therefore undue friction by reason of a bent strangler spindle, carboned-up bearings or a broken spring would explain non-closure of the flap when the choke control is out. Removal of the air-cleaner connection will enable this to be checked.

The interconnection between the strangler lever and the throttle should ensure that the latter opens beyond the normal slow-running position, when the strangler is fully closed.

Difficult Starting When Engine is Hot: This trouble is caused by an over-rich mixture and can be a source of annoyance, particularly in hot climates.

If this fault is experienced, first ensure that the needle and seating fitted is of the correct size. Having cleaned the assembly replace it with the correct washer, ensuring it is screwed tightly in position.

Examine the float to ensure it is not damaged or bent. See it moves freely on the axle-pin.

A new needle and seating of the size specified will eliminate the possibility of the assembly being worn and no longer able to withstand normal fuel pump pressure.

Where it is found that fuel floods into the manifold from the outlet of the emulsion block within seconds of switching off the motor in spite of fitting a new needle and seating, check the fuel pump pressure, and if necessary have it reduced to prevent the internal flooding which could explain difficulty in hot starting. An additional washer under the needle seating may be effective in preventing flooding and could be tried before recourse to lowering pump pressure.

Erratic Slow-running or Stalling on Deceleration: Make certain the slow-running jet is clean, also ensure that the feed hole to the channel in which the jet screws is free and the slow-running air bleed, into the air intake, is clear.

Check to make certain that the slow-running outlet hole and the progression hole or holes in the throttle barrel are clear, and not carboned up to restrict the orifice.

Remove the volume control screw to make sure the tapered end is in good condition. If it has been screwed down hard into the slow-running hole several times, a parallel portion will have been formed on the taper; this will render abortive any attempt to adjust the screw, which should be replaced with a new one. Make certain the spring under the head of the screw effectively spring-loads the screw, to prevent it vibrating out of position when set.

It is most important to check the flatness of float-chamber, floatchamber cover and emulsion block faces. Faces should be rubbed on a flat surface, covered with fine emery cloth, or on a lapping plate. Any leakage at these mating surfaces will prevent consistent slow-running being achieved, cause stalling on gradients and give poor pick-up.

The degree of throttle opening will determine the speed of slow-running, while the adjustment of the volume control screw will vary the mixture strength. Set the idling speed then adjust the volume control screw so that the engine will idle evenly, with no tendency to stall on snap closure of the throttle. Also make certain that, as the throttle is opened slowly from the idle position onto the progression holes, there is clean progressive acceleration of the speed of the engine.

In time, wear of throttle spindle and the bearings in which it operates will cause difficulty in obtaining satisfactory idling and explain hesitation and flat spots in opening-up off idle on to the main carburetter.

Stalling of the engine is usually due to the idle speed being set too slow, or the mixture too lean.

It is essential that the foregoing adjustments are made when the engine is at normal working temperature.

Excessive Fuel Consumption: Having checked the air cleaner, ensure the carburetter has the standard setting of jets and air bleeds fitted, make certain that all holes and passages in the instrument are clear. See that the strangler flap in the air intake opens completely when the choke control is pushed in.

Dismantle the economy device to make sure the diaphragm material is intact, and is in good condition, also that the gaskets (one each side of the diaphragm) are in position and are in good condition. If a replacement diaphragm is needed it is always best to fit new gaskets and a new spring as the tension of the spring is vital to the correct operation of the economy diaphragm.

When reassembling the economy diaphragm, etc., see that the spring beneath the cover is in position and is located squarely in the recess of the metal cup in the centre of the diaphragm. Take care to tighten evenly and fully the screws which secure the cover. Any leakage at the joint will affect the degree of depression necessary to overcome the spring tension which normally holds the diaphragm down in the closed position.

If there are symptoms of richness on idling and adjustment of the volume control screw fails to rectify the richness this would point to internal flooding, the needle not closing on its seating by reason of dirt, worn needle and seating or to excessive pressure from the fuel pump.

Clean the needle and seating, ensure the seating is fitted with the soft aluminium washer and is screwed tightly in position. Make certain the gasket under the emulsion block is in good condition. Ensure the float moves freely on the axle pin.

A new needle and seating, of the size specified for the particular application, with a new washer should be fitted if the needle shows signs of appreciable wear.

Should it be found that after the above attention the obvious richness persists the explanation is doubtless excessive fuel pump pressure and this should be checked and lowered.

It will be seen there are no joints below the fuel level in the floatchamber from which leakage can occur.

Poor Acceleration: Dismantle the economy device to ensure the diaphragm material is sound, as it will be appreciated that on snap acceleration, the release of the depression on the engine side of the throttle, which previously will have held back the diaphragm against the compression of the spring will result in the valve closing the main air ventilation to the jets. This temporary closure of the diaphragm valve will result in faster emptying of the reserve of petrol in the passages in the emulsion block above the main and compensating jets.

Flat spots or hesitation on progressive opening can generally be eliminated by careful adjustment of the slow-running mixture, after making certain the progression holes in the throttle barrel are clear.

Loss of Power: Make certain that all jets and passages in the emulsion block are clear, and that the throttle is opening fully.

Altitude: Unless otherwise stated, all the jets and airbleeds used in this carburetter are calibrated in units of hundredths of a millimetre. Main, compensating, slow-running and pump jets are normally available in steps of five units, and airbleeds in ten. In all cases, a higher number indicates a larger

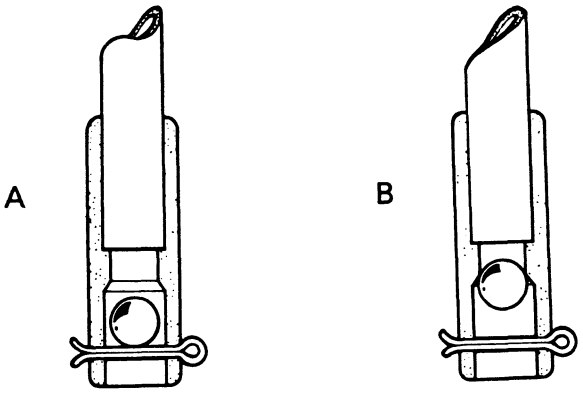

Figure 12. INLET MANIFOLD DRAIN VALVE

A. Valve open – engine stopped
B. Valve closed – engine running

calibration, and therefore a jet stamped 105 is the next size smaller than one marked 110. Half-size main and compensating jets can be supplied to order for final tuning, one stamped 97 being midway between 95 and 100.

When a tractor is being operated at heights in excess of 5,000 feet some reduction in sizes is necessary, to maintain the correct fuel/air ratio in the rarefied atmosphere.

Below we detail recommended changes to main and compensating jets for different altitudes.

	Main jet	Compensating jet
5,000 to 7,000 ft	½ size smaller	½ size smaller
7,000 to 10,000 ft	1 size smaller	1 size smaller
10,000 to 15,000 ft	2 sizes smaller	1 size smaller

While no change is specified for altitudes up to 5,000 feet, in cases where economy is more important than performance it would be worthwhile trying the smaller main jet, when the altitude exceeds 3,500 feet.

Inlet Manifold: The inlet manifold is water heated: hot water from the cylinder head flowing through a drilling in the manifold face and returning to the inlet side of the water pump through an external pipe.

Manifold Drain: A drain pipe is fitted at the lowest point of the inlet manifold so that fuel will not accumulate when the engine is stationary. A simple valve is fitted on the end of the drain pipe so that when the engine is stopped the pipe is open and fuel can run out, but when the engine is running the valve is closed. (Fig. 12.)

If air leakage occurs past the drain-pipe ball valve when the engine is running, erratic running at low speed and power loss will occur due to a weak mixture.

Later tractors are fitted with a longer drain pipe coiled to hold fuel when the engine stops. On restarting the fuel is drawn back into the manifold and no fuel will drain from the pipe unless serious flooding occurs: due to excessive use of the choke control or a faulty carburetter.

Fuel Feed Pump

The fuel feed pump is mounted on the right-hand side of the engine crankcase and is actuated by a push rod from an eccentric formed on the camshaft.

To remove the fuel feed pump, disconnect fuel pipes at the pump and release the two bolts securing the pump to the engine crankcase. When the pump is removed the push rod may be withdrawn from crankcase. (Fig. 13.)

Renewal of Diaphragm: Clean exterior of the pump and mark top and bottom halves so that they can be replaced in the same position. Remove six cheese-headed screws securing the upper half of the pump to the base and lift off the pump top.

Remove diaphragm complete with pull rod by

Figure 13.

FUEL FEED PUMP

A. Diaphragm
B. Diaphragm push rod
C. Connecting link
D. Diaphragm spring
E. Pump body
F. Outlet valve
G. Inlet valve
H. Filter screen
J. Hand primer
K. Sediment bowl

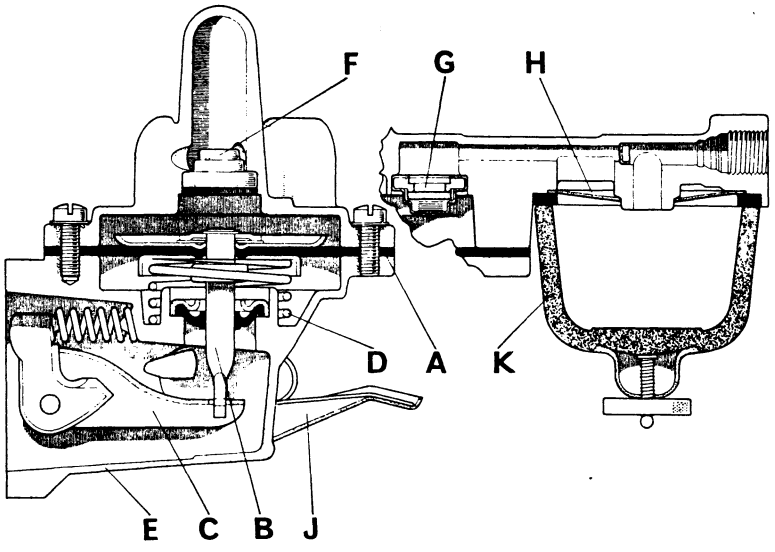

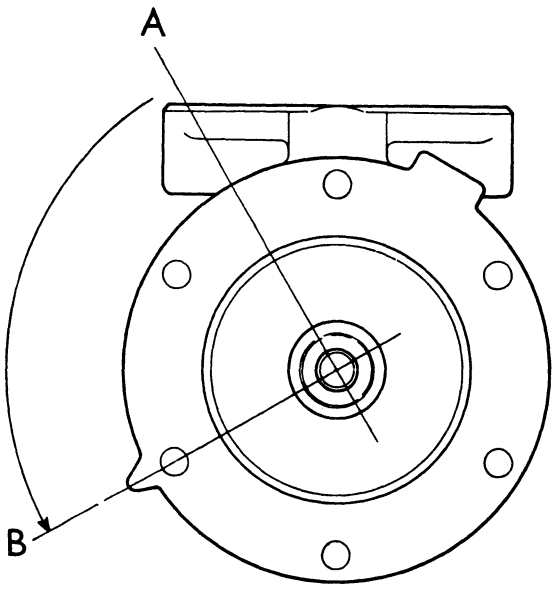

Figure 14. REFITTING FEED PUMP DIAPHRAGM

With the diaphragm tab at position 'A' fit diaphragm on to the pump body until the push rod enters the link slot, then give diaphragm a quarter turn, so that the tab moves to position 'B' to lock the push rod in the link slot.

turning these through an angle of 90° which should release the pull rod from the connecting link. Fit new diaphragm and pull rod over the spring with the tab in the position shown in Fig. 14. Press the centre down until the "T" of pull rod enters slot in connecting link and turn diaphragm through 90° as shown in Fig. 14 so that they lock together. The upper housing may then be replaced. Press priming lever and keep it pressed whilst the cheese-headed screws securing the housing are tightened. This ensures the diaphragm is not taut.

Fuel Tank Removal

The easiest way of removing the fuel tank is to remove the tank complete with instrument panel, then remove instrument panel from tank.

First drain tank by unscrewing union nut on fuel tap outlet and allowing fuel to flow by gravity into a suitable, **clean** container. If tractor is not fitted with a fuel tap, remove union from fuel feed pump inlet and allow the fuel to siphon through pipe into a suitable, clean container. Do not release the union at the tank end of pipe as this will allow air into pipe and prevent the siphon action from taking place. Disconnect engine speed indicator drive cable and wiring. Some of the wires are fitted with snap connectors, but others, such as oil warning switch wire, will have to be disconnected at their terminals.

Remove fuel tank strap, unscrew fuel outlet then lift tank assembly from its support.

Replace the tank in reverse order of removal ensuring that seating pads are in position and wires are replaced in their correct connectors.

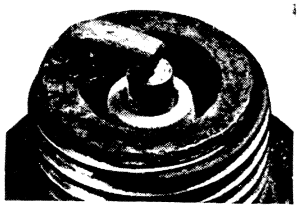

A. **NORMAL:** Under normal working conditions the plug insulator should be clean and ranging in colour from light to medium brown.



B. **OIL FOULING:** Wet, oily carbon deposits denote that excessive oil is reaching the combustion chamber. An engine overhaul is the only cure but some alleviation may be obtained by using a hotter grade of plug.



C. **SOOTING:** Soft, fluffy carbon on the insulator tip indicates rich mixture or excessive use of the choke. If not corrected by adjustment of the carburetter change to a hotter grade of plug.



D. **PRE-IGNITION:** Pre-ignition conditions are indicated by a white, spotted insulator tip and may be caused by weak mixture, over advanced ignition, manifold air leaks or inefficient cooling. Check for causes and if necessary use a cooler grade of plug.

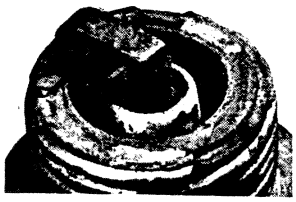

E. **OVERHEATING:** Corrosion and oxidisation of the plug threads are caused by the escape of hot combustion gases due to insufficient tightening or fitting without a gasket.

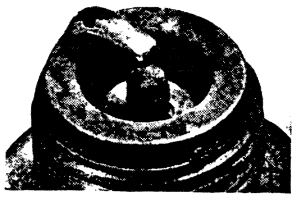

F. **ELECTRODE DETERIORATION:** With spark plug electrodes running excessively hot, rapid wear occurs. This can happen under persistent heavy load conditions and denotes the advisability of using a cooler running plug.



G. **FUEL DEPOSITS:** Certain beneficial additives used in petrol cause grey, yellowish or brown deposits on the spark plugs. Regular cleaning will prevent these deposits building up to form glazed or clinkery masses which are difficult to remove and will eventually cause plug failure.



H. **WORN OUT:** This plug has more than completed its useful life: it is inefficient and cannot be properly adjusted. Under these conditions the answer is a replacement set of plugs.

Figure 15. CONDITION OF SPARK PLUGS

Spark Plugs

The function of the spark plugs is to provide a pair of spaced electrodes between which the high-tension current must spark, and so ignite the fuel and air mixture in the combustion chamber. As plugs cannot operate correctly if the inside is coated with carbon, the outside coated with dirt, or the electrodes not set to the correct gap, the plugs must be removed, cleaned and examined every 250 hours and a new set fitted every 500 hours.

Removal and Examination: Disconnect the high-tension leads and remove the plastic covers. Use a correctly fitting box-spanner and hold it in line with the plug to prevent it fouling, and possibly cracking, the insulator.

The general appearance of spark plugs give an accurate guide to their condition and also the conditions under which they are working. (Fig. 15.)

Cleaning: The most satisfactory method of cleaning plugs is by sand-blasting on a proprietary plug-cleaning machine. In an emergency, soft, oily deposits may be removed by washing the plug in gasoline and drying with an air blast. After cleaning the inside of the plug, clean the plug threads with a wire brush and wipe the outside of the insulator.

Setting the Gap: After the plug has been cleaned, set the gap to 0·025 in. by gently tapping the body electrode. Do not attempt to guess the gap but use a feeler gauge, preferably a special plug gauge which has wire feelers.

Refitting Plugs: Check that the plug holes in the cylinder head are clean and the sealing washers are in position on the plugs. Screw the plug in finger-tight, then use a box-spanner to tighten the plug to 30 lb ft. Clean and replace the covers.

DISTRIBUTOR

Lubrication: Release the two retaining clips and carefully lift the distributor cap clear of the rotor.

1. Remove the rotor and add a few drops of engine oil to the felt pad on the top of the breaker cam.
2. Apply a smear of high-melting-point grease to the cam.
3. Apply several drops of engine oil through the oil-hole in the contact-breaker baseplate.
4. Add one or two drops of engine oil to the fibre bush on the contact breaker arm.

Contact Points: For satisfactory operation the surfaces of the contacts should have a grey, frosted appearance. If they are slightly pitted they should be removed and refaced on a smooth carborundum stone. Points which are heavily pitted should be renewed.

To remove the contacts, first remove the rotor then remove the screw attaching the fixed contact to baseplate. Lift contact assembly from baseplate so that the low-tension wire can be disconnected.

When replacing the contacts ensure that the various components are assembled in the correct order, and if fitting new contacts clean the preservative from the contact faces. (Fig. 16.)

1. Fit the fixed contact on to the brass pivot pin and locate the locking screw F.
2. Press the two ears of the plastic insulator C through the lug B *(do not* attempt to force the ears through the lug with a screwdriver as this may damage them — if any difficulty is experienced in locating the ears, pinch them together with the fingers and try again).
3. Place the condenser lead D terminal on to the insulator centre pin, as shown, so that the lead runs flush with the breaker plate.
4. Place the L.T. lead E terminal on to the centre pin so that the lead will not foul the contact arm spring.
5. Fit the moving contact on to the brass pivot pin and locate the spring arm A on to the insulator centre pin, thus securing the terminals in position.
6. Adjust the contact gap as described above.

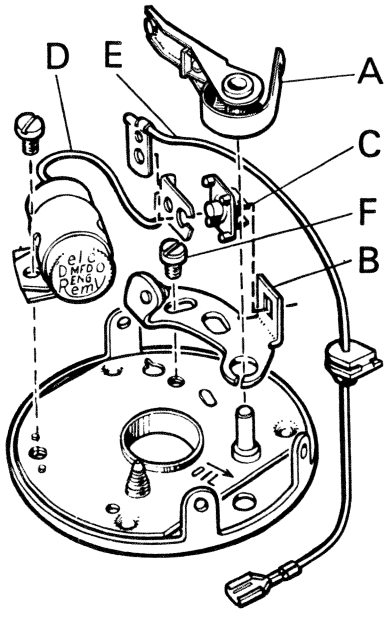

Figure 16. CONTACT BREAKER ASSEMBLY

A. Spring arm
B. Fixed contact lug
C. Plastic insulator
D. Condenser lead
E. L.T. lead
F. Locating screw – fixed contact

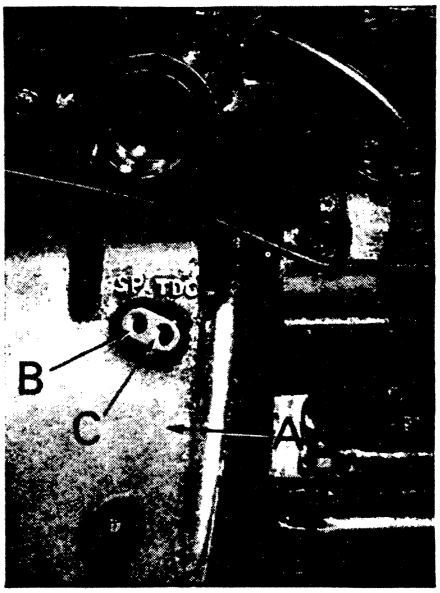

Figure 17. ENGINE TIMING APERTURE
A. Clutch housing **B.** SP hole **C.** TDC hole

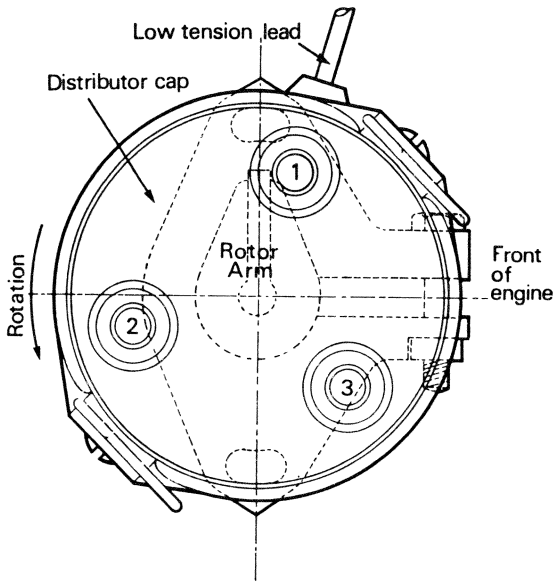

Figure 18. DISTRIBUTOR POSITION
When No. 1 cylinder is at TDC on firing stroke

To prevent them fouling moving parts the condenser and L.T. leads should be tucked well down to run flush with the breaker plate surface.

Setting the Point Gap: Turn the engine until the heel of the moving contact is on the highest point of the cam, then use a screwdriver to move the stationary contact until a 0·020 in. feeler gauge can be inserted between the contact points. Fully tighten the retaining screw on the stationary contact then recheck the gap before replacing the rotor arm and cap. If a 0·020 in. point gap gives unsatisfactory performance or point life, set distributor dwell angle to 36°. When using a dwell meter for six-cylinder engine note that reading should be 18° to give 36° dwell angle on a three-cylinder engine.

Centrifugal Advance: The only accurate method of checking the operation of centrifugal advance is by means of an engine analyser and comparing the results with the graph. (Page 36.) If such equipment is not available a rough check can be made by turning the rotor in the direction of rotation (anti-clockwise) and then releasing it. If the mechanism is in satisfactory order the rotor will be returned the full distance by the weight springs and will not be able to be returned further by hand.

Distributor Removal: Disconnect the low-tension lead from the coil, remove the distributor cap and note the position of the rotor arm. Scribe a mark across the distributor clamp and governor cover, then remove the two bolts attaching the clamp to the cover: do not release the bolt attaching the clamp to the distributor. The distributor can then be lifted vertically out of the cover.

Refitting Distributor: Ensure the 'O' ring is positioned in the body groove and turn the rotor to point in the same direction as before removal. If the position of the rotor arm is not known, or the engine has been turned, look down the governor cover and observe the position of the drive slot: this is offset to one side. Note the direction of the slot and the position of the offset then set the distributor coupling in the same position. Refit distributor into cover, turn rotor arm slightly until the drive coupling is engaged and the clamp is flat on the cover, then fit the two retaining bolts. Align the marks made on the clamp and cover before removal, so that the original timing is obtained, then firmly tighten the two bolts.

Replace the cap and connect the low-tension lead.

Timing the Distributor: If incorrect ignition timing is suspected, retime the distributor as follows:

1. Remove the distributor cap and turn the engine, in its direction of rotation, until the rotor arm is pointing towards the front of the engine. Number One piston is then coming up on a compression stroke.
2. Insert the timing pointer through the SP hole in the flywheel housing (Fig. 17) and slowly turn the engine until the pointer drops into the flywheel indentation. This is the static timing position.
3. Release the two bolts attaching clamp to governor cover, then turn the clamp so that the bolts are in the centre of the slots and firmly tighten the bolts. This will allow adjustment to be made in either direction should it be required later.
4. Release the single bolt through the clamp so that the distributor body can be turned, then turn the body until the points are fully open and check that the point gap is 0·020 in. and reset if necessary.
5. Turn distributor body anti-clockwise until the contact-breaker points are closed (the low-

tension lead hole through the body must now be towards the cylinder block) and connect a timing light to the contact-breaker terminal (or leaf spring and earth). (Fig. 18.)

6. Switch the ignition on and note that the timing light is out. Rotate the distributor body slowly in a clockwise direction until the timing light illuminates (this shows that the points have just opened) then tighten the clamp bolt to lock distributor body in position.
7. Turn engine for two revolutions then check that the light illuminates just as the pointer engages in the flywheel indentation.

Ignition Coil: The coil is an oil-filled and sealed unit. The only maintenance required is keeping the connections clean and tight. If a coil is suspected of faulty operation remove it and temporarily connect a new coil: negative terminal to the distributor and positive terminal to the ignition. If the original coil is defective the new coil will correct the fault.

LUBRICATION SYSTEM

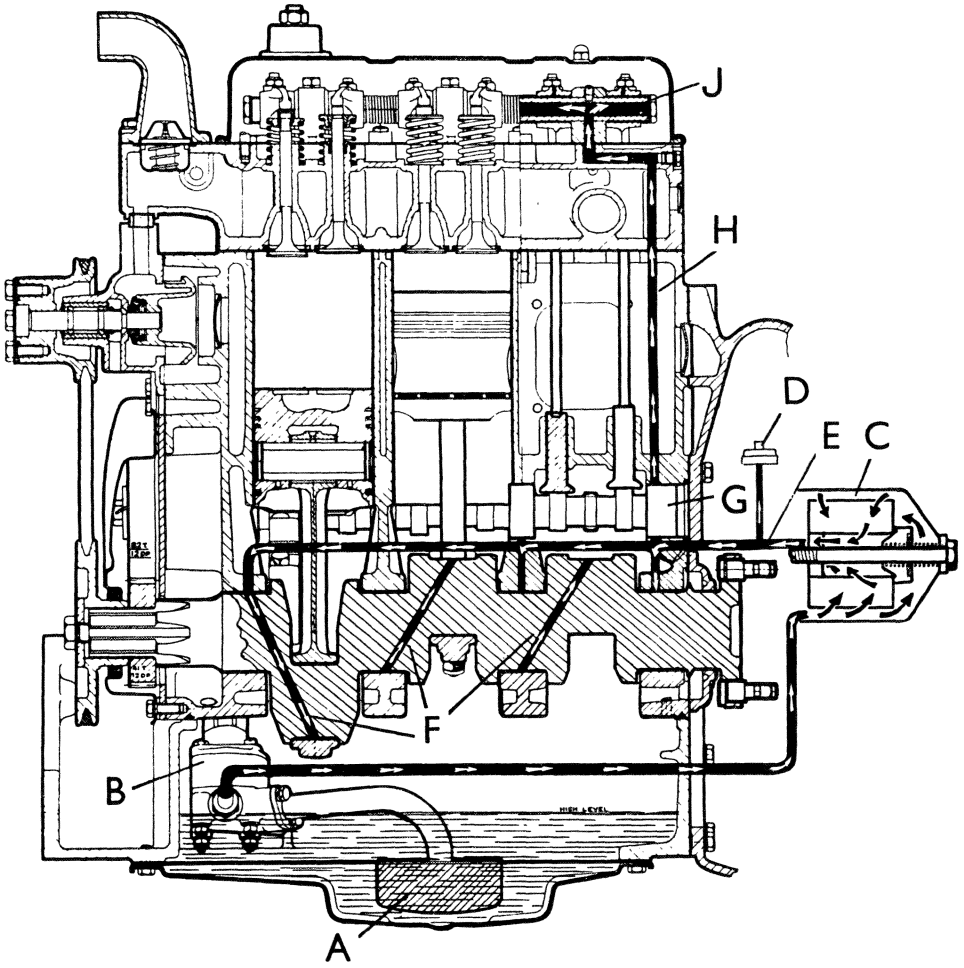

Figure 19. DIAGRAM OF LUBRICATION SYSTEM

A. Pump inlet screen **B.** Oil pump **C.** Filter **D.** Warning light switch
E. Oil gallery **F.** Crankshaft oil passage **G.** Camshaft rear bearing
H. Valve gear feed **J.** Rocker shaft

Engine Lubrication

Oil is drawn from the sump by the gear-driven rotary oil pump and delivered under pressure to the oil filter. After filtration the oil passes to the main oil gallery in the cylinder block and so, via oilways in the block webs, to the crankshaft main journals and then on, through further oilways in the cylinder block, to pressure lubricate the camshaft bearings. The big-end bearings are lubricated by drillings in the crankshaft webs. (Fig. 19.)

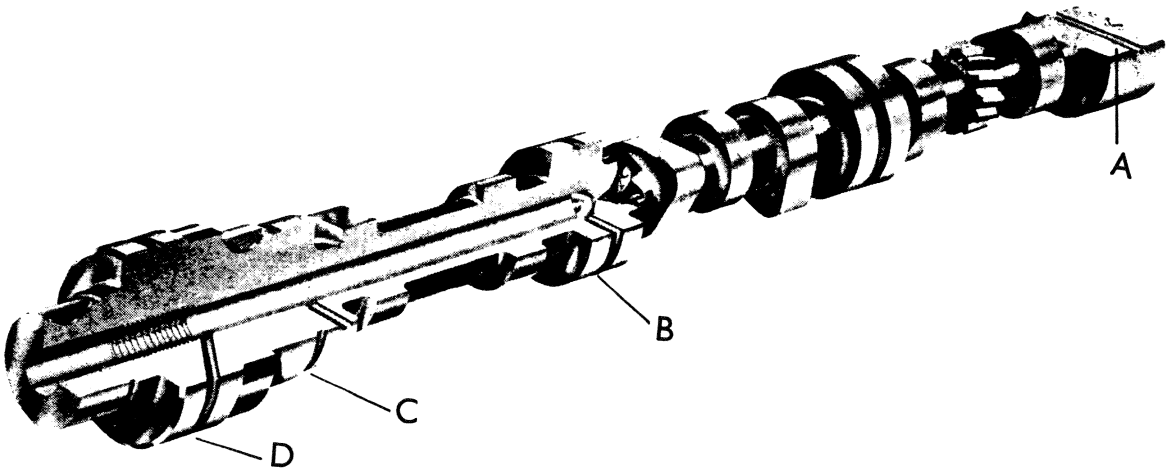

Figure 20. CAMSHAFT OILWAYS

A. Cross drilling for feed to valve gear
B. Oil feed into camshaft
C. Feed to No. 2 bearing
D. Feed to front bearing

The rocker shaft and valve rockers are intermittently fed with oil from the camshaft rear bearing through oilways in block and head and an external connecting pipe. The camshaft is drilled off-centre so that the oilways are connected only once in each revolution. (See Fig. 20.) The oil lubricates the tappets and push rods as it runs back to the sump. There is a central oilway along the camshaft up to No. 3 bearing, so that oil from this bearing can lubricate Nos. 1 and 2 bearings. The locating housing for the front bearing is drilled to feed oil on to the oil pump drive gears. Splash from these gears lubricates the bearings in the pump drive housing, and oil leakage from the front of the bearing lubricates the timing gears by splash.

unfiltered oil. The replaceable paper element should be renewed at the intervals specified on Page 3. A new element should also be fitted when an engine is overhauled and also if a cylinder head gasket fails. If engine oil and filter element are not changed when a failed cylinder head gasket is replaced, any water which has leaked into sump will cause the paper filter element to swell and fail to pass oil. (Fig. 21.)

Do not attempt to clean a filter element.

Oil Warning Light

The oil warning light on the instrument panel is earthed by a switch in the cylinder block and when the switch opens the light is extinguished. The switch

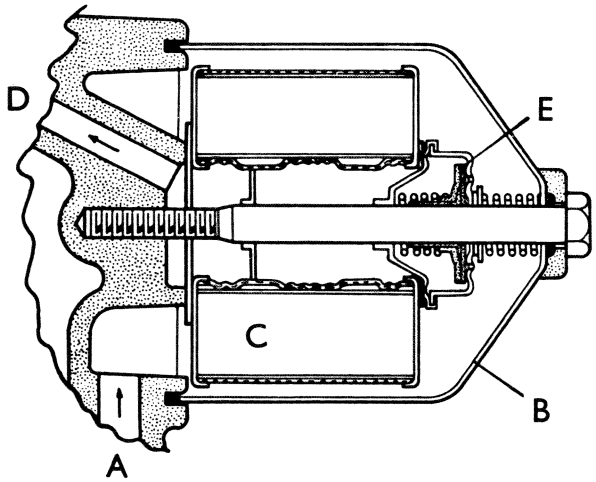

Figure 21.

SECTION THROUGH OIL FILTER

A. Oil feed from pump
B. Bowl
C. Element
D. Outlet to oil gallery
E. By-pass valve

A full-flow oil filter is mounted on the left-hand side of the cylinder block. The filter incorporates a by-pass valve so that if the pressure difference between the filter inlet and outlet exceeds 10 lb/sq in. the valve opens and allows oil to by-pass the element and flow straight into the oil gallery. The engine is not, therefore, starved of oil if the element is allowed to become choked, but it is supplied with

is connected into the main oil gallery and should open at 9 to 13 lb/sq in. but if not, it must be replaced because no adjustment is possible. If incorrect oil pressure is suspected the oil switch can be removed and a pressure gauge connected into the cylinder block, which is threaded $\frac{1}{8}$ BSP, so that the actual oil pressure will be shown when the engine is started.

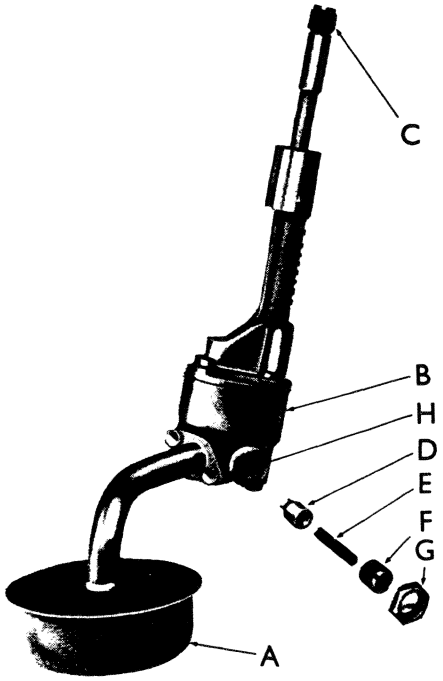

Figure 22. LUBRICATING OIL PUMP

A. Oil inlet screen **B.** Pump body **C.** Driveshaft
D. Relief valve plunger **E.** Spring **F.** Adjusting screw
G. Locknut **H.** Oil outlet connection

Oil Pump

The gear type oil pump is located in the engine sump and contains a relief valve which is set to open at 40 lb/sq in. (Fig. 22.)

To Remove the Pump

1. Drain engine oil and remove sump.
2. Disconnect outlet pipe from pump to cylinder block.
3. Release locknut and remove pump locating screw, which is situated on the side of block just below pump drive housing, and withdraw pump downwards.

The oil pump must be dismantled to check gear wear, gear end-float, and the condition of the upper bearing.

To Dismantle Pump

1. Remove the two setscrews and two bolts securing pump cover, noting that the two bolts are special locating bolts and must be fitted in their correct places when re-assembling.
2. Remove cover, complete with relief valve, and filter.
3. Check backlash between gears — this should be 0·020 to 0·026 in.
4. Remove driven gear and shaft.
5. Use a drift to force driving shaft from driving gear.
6. Check rotor and housing dimensions.
   Rotor width: 1·1865 – 1·1855 in.
   Housing depth: 1·1890 – 1·1875 in.

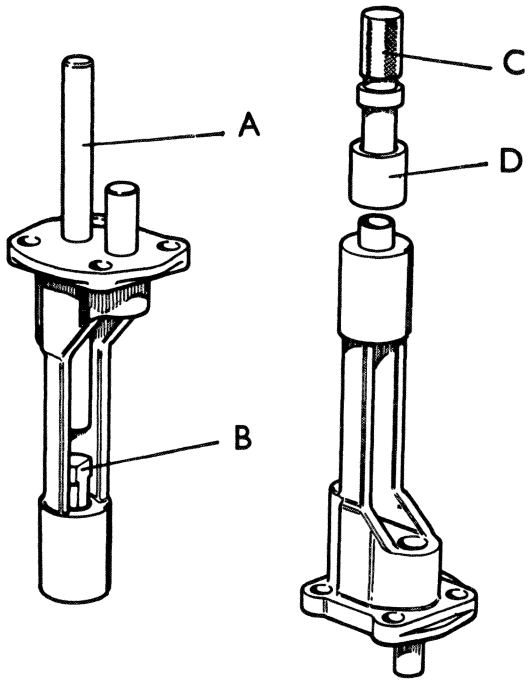

Figure 23. REPLACING OIL PUMP BRACKET BUSH (Using Service Tool 901701)

A. Long drift **B.** Pilot **C.** Replacer drift
D. Centraliser guide

   Rotor side clearance: 0·001 – 0·0035 in.
   If end-float is excessive but backlash is within limits and the gears are not worn, it is permissible to grind the face of the housing to reduce end-float. If the gears are damaged, both gears should be replaced. Never replace one gear only.
7. Check the upper bearing for wear.
   Bush internal diameter: 0·4905 – 0·4925 in.
   Shaft diameter: 0·4895 – 0·490 in.
   Clearance: 0·0005 – 0·003 in.

If wear is excessive, remove the bush and replace using Service Tool 901701 as detailed below:

1. Slip special pilot bush B through slot in pump bracket to locate in drive shaft bush.
2. Stand pump bracket on a suitable hollow anvil or press base.
3. Place drift A in position.
4. Drive or press out pump bracket bush.
5. The driven rotor shaft may be removed using drift A. (Fig. 23.)

To replace the new bush:

1. Place new bush on the replacer drift C.
2. Push centraliser D over new bush and drift C until oil-hole in bush just shows at bottom edge of centraliser.
3. Start new bush in pump bracket and slide centraliser D up to pump bracket.
4. Stand the pump bracket on a flat anvil or press base; drive or press C until it butts firmly against D. The bush is now in its correct position in pump bracket.

Relief Valve

If the valve is to be removed for cleaning purposes take note how many threads are showing above the locknut before removal. This is necessary so that the valve may be set in its original setting if a test rig is not available.

Approximate figures to use as a guide when setting the valve are: four threads showing above locknut give approximately 40 lb/sq. in.; one full turn produces a 6 lb/sq. in. variation in pressure.

To check the pressure, the oil pressure warning switch should be removed and a gauge fitted into the $\frac{1}{8}$ BSP hole in the cylinder block.

If a test rig is available the following procedure should be adopted (Fig. 24.):

1. Use Shell Fortisal 5W at room temperature of 20°C (68°F) or 20/20W at 46°C (115°F), which is equivalent to hot engine oil.
2. Pump to be driven at 750 rev/min or 330 rev/min.
3. Relief valve set to open at 40 lb/sq. in.
4. Pump flow at 20 lb/sq. in. should be 19·2 pints/min at 750 rev/min and 8·4 pints/min at 330 rev/min.

   Delivery in pints/min $= \frac{480}{\text{time in seconds for one gallon to flow.}}$

   Maximum time for one gallon should be:

   25 seconds at 750 rev/min.
   57 seconds at 330 rev/min.

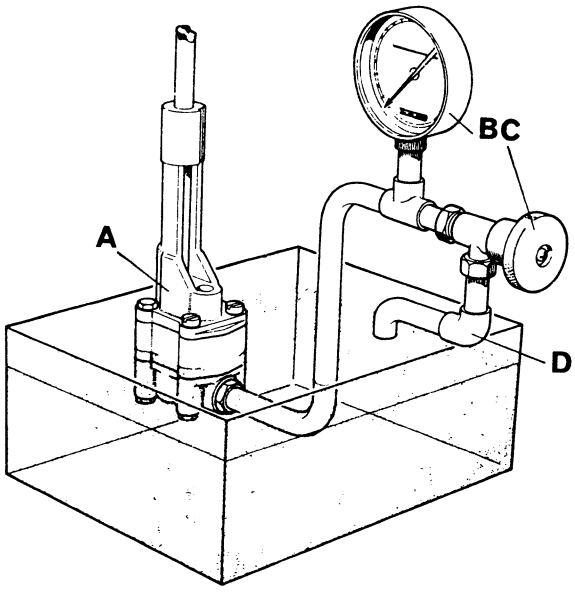

Figure 24. OIL PUMP TEST RIG

A. Oil Pump **B.** Pressure gauge **C.** Shut-off valve **D.** Swivelling outlet

To Replace the Pump

Reverse the removal procedure. Coat the locating screw with Wellseal, or a similar jointing compound, screw tightly into the cylinder block then tighten locknut.

COOLING SYSTEM

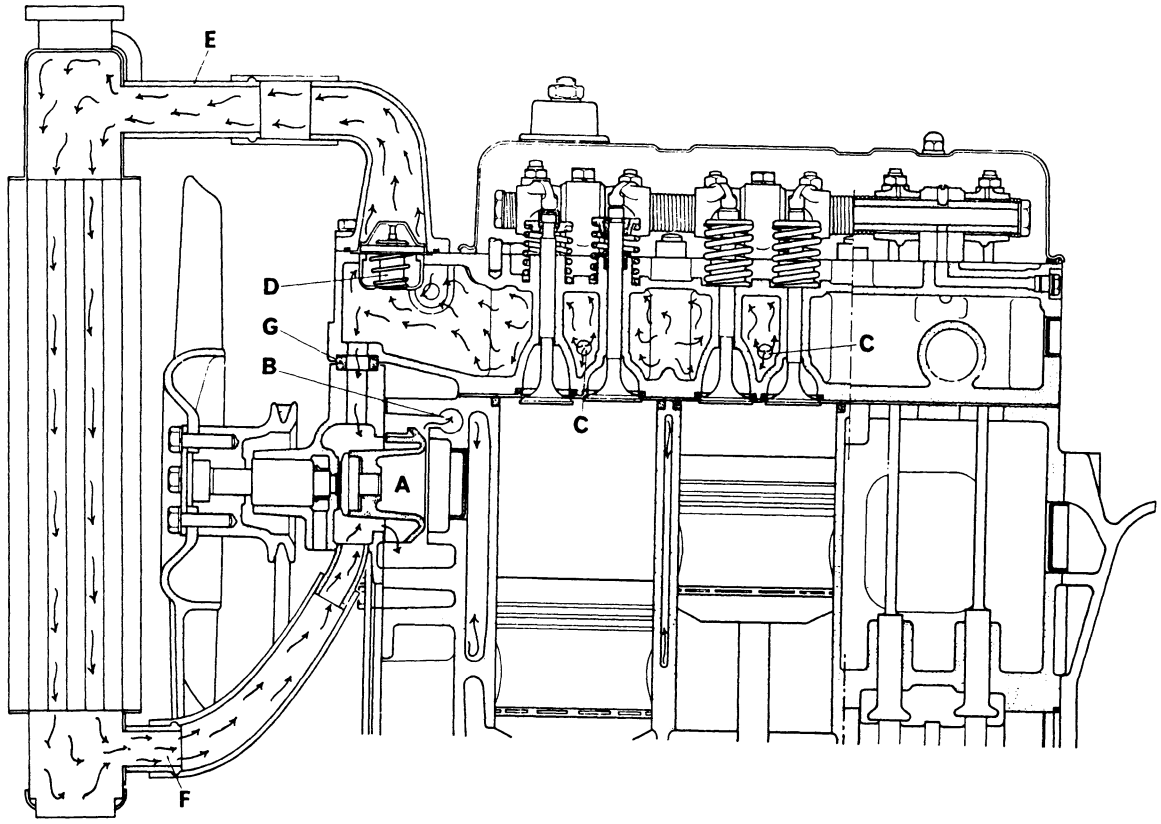

Figure 25. DIAGRAM OF COOLING SYSTEM

A. Pump impeller **B.** Passage into cylinder head **C.** Jets on to valve ports **D.** Thermostat
E. Radiator inlet **F.** Radiator outlet **G.** By-pass connection

Path of Water

Cold water is drawn into the water pump from the bottom of the radiator and is then pumped through a passage in the cylinder block to the cylinder head, where it is directed, in the form of jets, on to the plug bosses and integral valve guides. The water is able to pass, by thermo-siphon, into the block through the mating passages in the cylinder head and block to cool the cylinders. The hot water returns from the head to the top of the radiator through a thermostat which is only fully open when the engine reaches its working temperature.

When the thermostat is closed the water passing out of the cylinder head cannot pass into the radiator and therefore circulates through the by-pass into the inlet side of the water pump, thus ensuring that working temperature is reached as quickly as possible.

The system is pressurised by a spring plunger in the radiator cap, which allows steam to escape through the overflow pipe if the pressure exceeds 4 lb/sq. in.

The fan is mounted on the same spindle as the water impeller and is driven by a 'V' belt from the crankshaft at $1\frac{1}{2}$ times engine speed. (Fig. 25.)

Removal of Water Pump

This operation can be accomplished, without removing the radiator, in the following manner:

1. Drain the water from radiator and cylinder block.
2. Remove water pipe from radiator to pump.
3. Remove fan belt.
4. Remove fan blades (ensuring that they are marked in such a way that they can be refitted in the same position, thus safeguarding against the possibility of them getting out of balance).
5. Remove the manifold water pipe. Unscrew the five bolts fixing pump to cylinder block and remove pump.

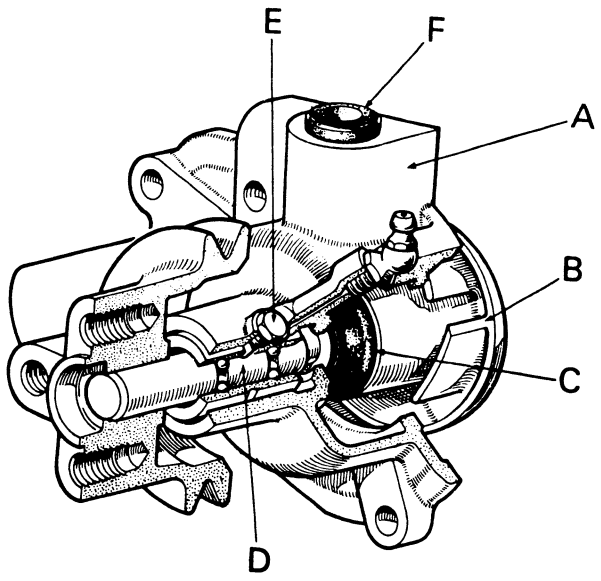

Figure 26. ARRANGEMENT OF WATER PUMP

A. Body **B.** Impeller **C.** Gland seal
D. Bearing **E.** Bearing locating screw
F. By-pass connection

Fitting a New Seal or Bearing

Withdraw the pulley from the shaft, using a suitable extractor such as Service Tool 960597, to expose the bearing locating screw.

Remove bearing locating screw E (Fig. 26) from pump body. Place pump, impeller upwards, on the bed of a press and suitably support it with packing. Press spindle and bearing assembly out, taking care not to damage impeller or pump body.

After spindle and bearing assembly has been removed the impeller may be lifted out and the seal prised out of end of impeller. The seal is supplied as a self-contained assembly and no attempt should be made to dismantle it. A new seal should be carefully pressed into impeller bore using a little Pressoline No. 2 compound (one part Pressoline to three parts water) as a lubricant. Press the seal in until the shoulder touches the end of the impeller, taking care not to cut or damage the seal. Coat the contact face of the seal with anti-scuffing paste to prevent the seal sticking to the pump body.

To prevent leakage and rapid seal wear it is essential that seal contact face in pump body is very smooth and free from score marks.

Examine the spindle and bearing assembly and, if this is to be renewed, remove pulley with a suitable extractor or press.

Reassembly of Water Pump

When refitting spindle and bearing assembly ensure that the hole in bearing shell is aligned with locating screw in pump body. The fan pulley and impeller should be pressed on to spindle so that the ends of spindle are flush with the ends of appropriate bores in pulley and impeller.

Before replacing water pump, check the condition of by-pass seal; if this is at all suspect it is advisable to renew it, as renewal is more difficult when both pump and cylinder head are in place.

A new gasket should always be used when refitting the pump and the retaining plate fitted on the fan blade setscrews, to avoid any possibility of blade fracture at the bolt holes.

Thermostat

To test the thermostat, remove it and place it in cold water together with an accurate thermometer. Heat the water and as the temperature rises note at what stage the thermostat begins to open. This should be at between 174°F and 183°F (79°C – 84°C). At 200°F (94°C) it should be fully open.

On the base of the thermostat the figure 180 signifies the temperature at which it should start to open.

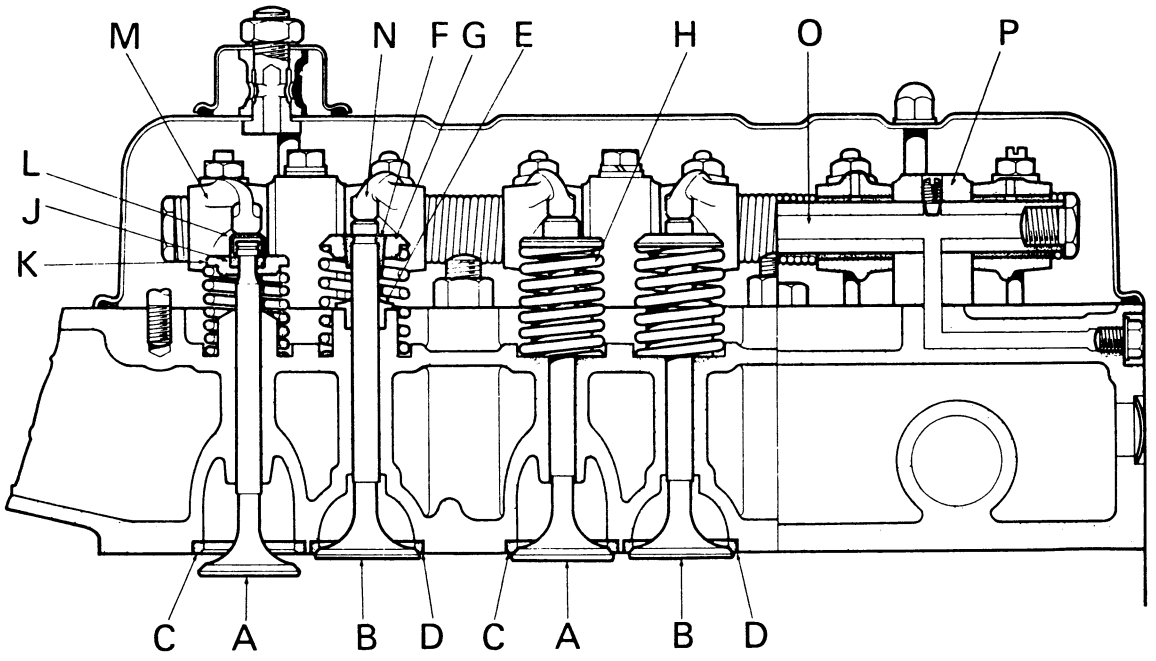

Figure 27. CYLINDER HEAD AND VALVES

A. Exhaust valves
B. Inlet valves
C. Exhaust seat inserts
D. Inlet seat inserts
E. Inlet valve stem seals
F. Inlet valve cotters
G. Inlet valve cup
H. Springs
J. Exhaust valve cotters
K. Exhaust valve cup
L. Stem end cap
M. Exhaust valve rocker
N. Inlet valve rocker
O. Rocker shaft
P. Rear bracket (with oil feed to centre of rocker shaft)

Engine Tune

If the engine is down in power, difficult to start, or uses excessive amounts of fuel, tune the engine as follows:

1. **Compression:** Remove the plugs and, using a reliable pressure gauge, hold the throttle full open and spin the engine with the starter motor. Note the compression reading and check each cylinder in turn. The actual pressure obtained depends on engine temperature, cranking speed and compression ratio, but if the three readings are approximately the same proceed with the engine tune. If there is more than 25 lb/sq. in. difference in the compression readings then it is advisable to remove the cylinder head as the loss of compression is probably due to leakage past the valves. (See Page 23.)
2. **Valve Clearance:** Whilst the plugs are removed from the engine, remove the valve rocker cover and check tightness of the cylinder head bolts then set the valve clearances. (See Page 3.)
3. **Distributor:** Remove and clean, or renew, the distributor contact points. Set the points to the correct gap and then check the ignition timing. (See Page 15.) Clean the distributor cap and examine for any hair-line cracks before replacing it.
4. **Spark Plugs:** Clean, re-gap and test the spark plugs. (See Page 13.)
5. **Air Cleaner:** Clean out oil bath and replenish with clean oil. Wash out gauze filter, clean inlet tube and pre-cleaner. If a paper element pre-cleaner is fitted, clean or renew the element. (See Page 2.)
6. **Sediment Bowl:** Remove the sediment bowl and filter screen. Wash in gasoline and replace. (See Page 3.)
7. **Carburetter:** Remove air inlet elbow from the top of carburetter. Apply a few drops of oil to the strangler flap spindle and check that when the choke control is pulled out the strangler flap fully closes the air inlet. As the strangler flap is closed by the action of the coil spring inside the carburetter lever, so that when the engine starts the air flow can open the strangler and prevent over-choking, any tightness of the spindle can cause the flap to remain open when the choke control is pulled fully outwards and thus prevent the engine from starting. Also check that when the choke

control is fully "In", the strangler flap is vertical. If not, release cable clamp screw on carburetter lever, hold the lever in the fully "Off" position whilst pulling the choke control out about $\frac{1}{8}$ in., then retighten the screw.

8. **Governor:** Start engine, allow to reach operating temperature then adjust the governor. (See Page 30.)

Decarbonising the Engine

When compression is low or engine is down in power due to an accumulation of carbon inside combustion chamber, the cylinder head should be removed, cleaned of carbon and the valves re-seated.

Cylinder Head Removal: Drain cooling water from radiator and cylinder block. Remove air inlet pipe from carburetter and remove both manifolds. Remove top water hose and valve rocker cover. Disconnect oil feed pipe to cylinder head, remove rocker shaft and push rods. (Fig. 27.)

Remove the cylinder head nuts and bolts in the reverse order to tightening sequence (Fig. 30) then lift off the cylinder head and place on bench. Remove gasket, clean block face and oil the bores before covering with a cloth for protection.

Cylinder Head: Remove spark plugs, thermostat and manifolds. Mark valves lightly for identification. Using a suitable spring compressor, remove the valve cotters, springs and valves from cylinder head and place in kerosene or degreaser. Remove inlet valve seals, clean carbon from cylinder head and inspect the valve guides and seats.

Valve Bores: The valve stems operate directly in the cylinder head (no separate guides) and if, after cleaning, the bores are found to be larger than 0·381 in. (or 0·006 in. clearance with a new valve) the bores should be reamed oversize with reamer Part No. 960989 (0·010 in. oversize) or 961824 (0·020 in. oversize) and the appropriate valves fitted. Use the reamer in a vertical pillar drill, running at its slowest speed; apply a liberal quantity of cutting fluid and take special care not to damage the sharp edge at the top of the exhaust valve bore.

Valve Seat Inserts: Check for pitting, cracking, looseness and excessive seat width. If the seats are in good condition, grinding in the valves will be all that is required, but if the seats are pitted they may be recut to 45° after using a glaze breaker. Seat width should not be more than 0·065 in. and may be reduced slightly using 15° and 75° cutters, otherwise a new insert will be required.

Cracked or loose inserts should be renewed. Do not attempt to secure a loose insert by centre-punching the head surface.

Removing a Seat Insert: Very carefully drill the insert, without damaging the cylinder head, then split the insert so that it can be removed without enlarging the head counterbore.

Fitting a Seat Insert: New inserts may be fitted if the diameter of the head recess does not exceed 1·626 in., otherwise a special insert will have to be made to maintain the required press fit. (See Page 38.)

The cylinder head must be very clean and heated in water to near boiling temperature: a steam jenny is ideal for this purpose. Cool the insert in dry ice (solid carbon dioxide) then place it on a suitable mandrel, or guide, and quickly tap it into the head recess: chamfer on insert towards the cylinder head

After fitting the insert, lightly cut at 45° until the seat is 0·030 to 0·040 in. wide and within 0·0015 in. of being concentric with the valve stem bore.

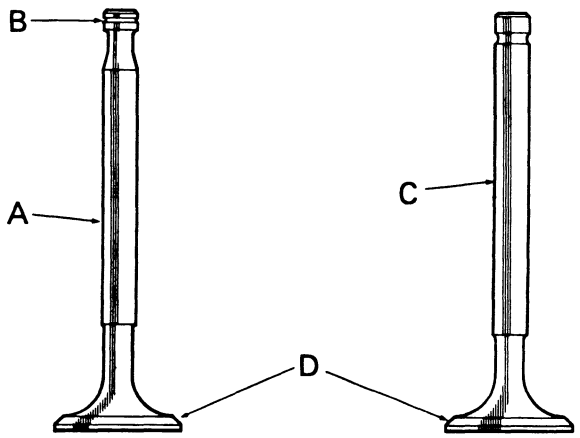

Figure 28. INLET AND EXHAUST VALVES

A. Exhaust valve **B.** Indentification groove
C. Inlet valve **D.** Seat angle 45°

Cylinder Head Face: This should be free from distortion or damage, otherwise the cylinder head gasket will be unable to provide an effective seal. Check the face with a straight-edge and feeler gauge, and reface if distorted or pitted. A maximum of 0·030 in. may be removed and a smooth surface finish must be obtained: score marks may cause gasket failure.

Inlet Valves: Clean and examine the valve heads and stems. Discard any valves with badly worn stems. The valve seats may be refaced at 45° provided sufficient metal remains to avoid a sharp edge being formed at the edge of the valve head.

Exhaust Valves: Remove all carbon and examine the valve heads and the stem cotter location. As the seat is stellite faced and excessive refacing will break through the stellite, only light refacing is permissible. Renew any valves that are worn round the cotter location.

Note: Exhaust valves for gasoline engines have an identification groove between the stem tip and the cotter location. *Diesel engine valves,* which may be dimensionally similar but of different material, *must not be used on gasoline engines.* (Fig. 28.)

Valve Springs: If suitable equipment is available, check spring lengths when under load. If such equipment is not available check the springs by comparing their tension with the tension of new springs.

Valve spring details:

Identification	Inlet yellow spot	Exhaust blue spot
Free length	2·127 in.	2·132 in.
36–40 lb load	1·646 in.	—
73–81 lb load	1·148 in.	—
43–47 lb load	—	1·608 in.
78–86 lb load	—	1·180 in.

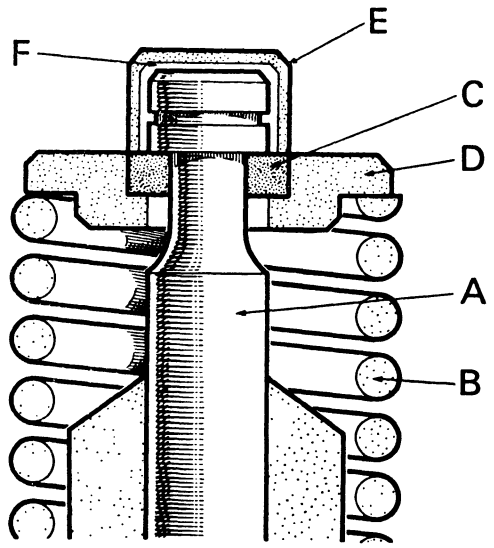

Figure 29. EXHAUST VALVE COTTERS AND CUP

A.	Exhaust valve stem	B.	Valve spring
C.	Valve cotters	D.	Valve cup
E.	End cap – valve stem	F.	Clearance – stem end to cap

Replace any weak, broken or corroded springs. If the engine has run for a large number of hours it is advisable to replace the complete set of springs.

Rocker Shaft and Rockers: Completely dismantle the rocker shaft, keeping the parts in the order of removal so that they can be reassembled in the same positions. Worn rocker bushes can be replaced but if the rocker tip is worn a complete new rocker should be fitted.

Clean out the rocker shaft, ensuring that all the oilways are clear. Check that the base of the rocker pedestals are completely flat where they seat on the cylinder head. Renew any pedestals that are worn or distorted.

Valve Grinding: If the rectification of the valves and seats has been carefully carried out only a light regrinding will be necessary. When all valves have been ground-in wash the head and valves in kerosene *until all traces of grinding compound have been removed,* then dry with an air-line.

Important: Distorted valves, eccentric seats, irregular seats, excessive seat width, excessive refacing of valves and excessive valve-stem clearance will all cause compression loss, burnt exhaust valves and shortened seat life.

Inlet Valve Seals: Having thoroughly cleaned the head and valves, fit new inlet valve-stem seals. Ensure that there are no burrs in the head chamfer and use Service Tool 961236, or a hollow drift. *Do not use a tool that touches the sharp edge of the seal.* Place seal on tool, smear with grease and place tool in recess. Two or three sharp taps with a copper hammer are sufficient to drive seal home. Do not fit seals until cylinder head is ready for assembling and do not withdraw a valve once it has been fitted through a seal. Pulling a valve stem through a seal causes the cotter groove to trap and damage the sharp edge of the seal and it is necessary to fit a new seal once a valve has been removed.

Assembling Cylinder Head: Smear the valve stems with clean oil and fit into their correct positions in the cylinder head. Replace the springs, collars and cotters, using a suitable tool to compress the valve springs.

Exhaust Valve Caps: When the exhaust valves have been refitted, check the stem-cap clearance with a plaster gauge. The clearance should be 0·002 to 0·006 in. and can be reduced by grinding the cap, provided that the cap edge remains square and the sharp corner is removed. (Fig. 29.)

Manifolds: Clean both manifolds. Ensure that the core plugs at the ends of the inlet manifold are correctly sealed and apply a light coating of jointing compound to the inlet manifold cover-plate gasket. Check that the inlet manifold drain pipe is clear and the valve is operating correctly. (See Page 11.) Fit the manifolds on to cylinder head, using new gaskets, and noting that the inlet manifold water passage is sealed with an 'O' ring.

Refitting Cylinder Head: Refit the head in reverse order of removal paying attention to the following points:

1. Check the thermostat and renew if necessary. (See Page 21.) Fit a new sealing ring on the top of the water pump.
2. Clean and lightly oil the cylinder bores.
3. Use Wellseal, or a good brand of thin non-hardening jointing compound, on both sides of the head gasket. The use of an incorrect jointing compound may allow water seepage.
4. Ensure that head and block faces are clean and the gasket is fitted so that the word "Top" is towards the cylinder head.
5. Tighten the head bolts and nuts in the order shown in Fig. 30 and in three stages of 30, 60 and 90 lb ft, then finally tighten again to 90 lb ft.
6. Renew any bent push rods and do not forget to fit the caps on the exhaust valves. Firmly tighten the rocker shaft pedestal bolts.
7. Carry out a full engine tune: valve clearances, plugs, distributor, air cleaner and governor, etc., as described on Page 22.
8. After the engine has run for approximately 1½ hours tighten the rocker shaft bolts, tighten the head bolts to 90 lb ft then check the valve clearances.

Caution: Never run the engine without cooling water as this may cause cylinder glazing and subsequent high oil consumption.

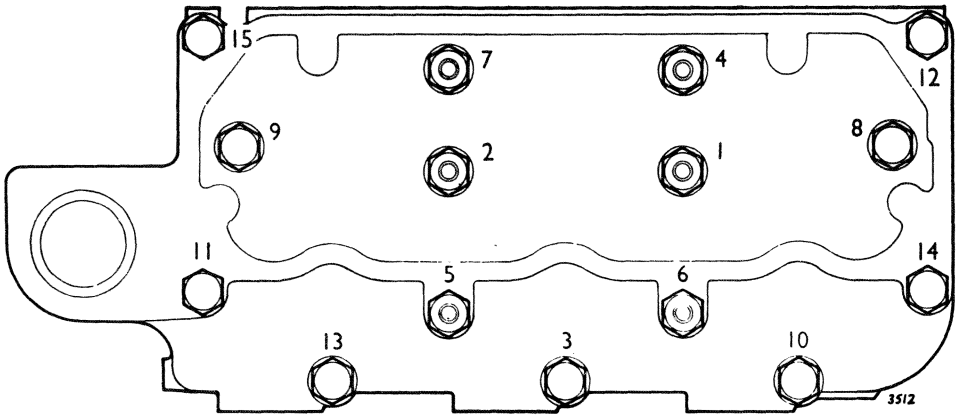

Figure 30. CYLINDER HEAD TIGHTENING SEQUENCE

Tighten the bolts and nuts in the order shown and in three stages of 30, 60 and finally 90 lb ft.

Removing the Pistons: The pistons cannot be removed through the sump when crankshaft is in position but can be withdrawn through the bores. Mark the pistons before removal and remove the connecting rod bolts, to prevent the bolt heads scoring the bore.

Gudgeon Pins: The fully floating gudgeon pins are retained by two circlips, one at each end of the pin, and to remove the gudgeon pin remove both circlips, then immerse piston in hot oil. This will cause piston to expand and allow the pin to be pushed out. Refit pin in same manner using hot oil, then replace circlips, ensuring that they are fully seated in their grooves. Mark the piston and connecting rod before removing the gudgeon pin: the gudgeon-pin hole is offset and the word "Front" stamped on the piston crown must be towards the front of the engine. (Fig. 31.)

Connecting Rods: The small end of connecting rod is bushed and this can be replaced if worn. Press out worn bush, using a suitable sized mandrel, and press in new bush, ensuring that oil hole in the bush is opposite hole in the end of connecting rod. Hone, or ream, new bush after fitting until gudgeon pin is a light push fit.

Connecting rods should always be checked for alignment whenever they are removed and especially if the piston skirt marking is not even. The easiest way of checking connecting rods is by means of a proprietary aligning tool such as is shown in Service Tool Leaflet B5, but if such a tool is not available, mandrels and 'V' blocks can be used.

Maximum out of parallel:	0·0005 in./in.
Maximum twist:	0·0005 in./in.

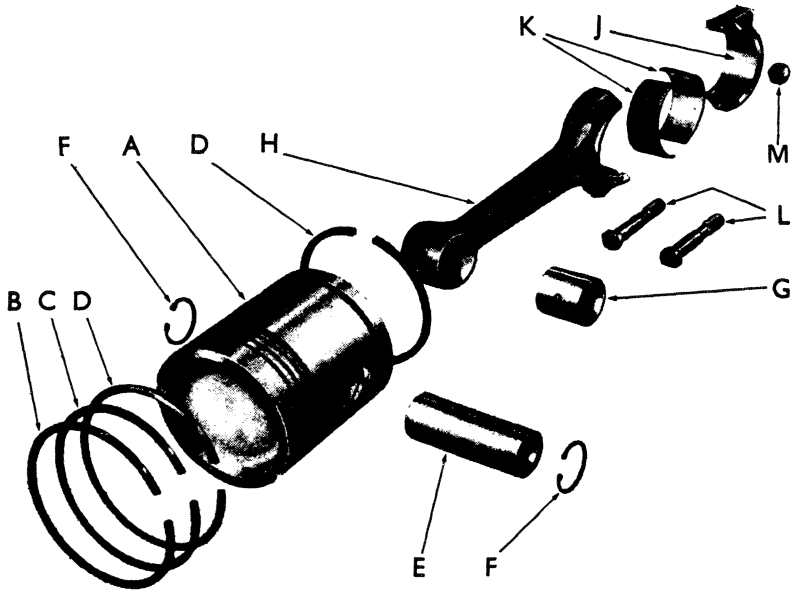

Figure 31. PISTON AND CONNECTING ROD

A. Piston
B. Chromed compression ring
C. Plain compression ring
D. Scraper rings
E. Gudgeon pin
F. Circlips
G. Bush – gudgeon pin
H. Connecting rod
J. Connecting rod cap
K. Big-end bearing shells
L. Connecting rod bolts
M. Self-locking nuts

If a connecting rod is outside the limits it must be renewed. Rods in these series of engines must not be straightened.

When replacing pistons check that the ring gaps are spaced round piston so that no two are in line, i.e., one above the other. Check that piston is the right way round: valve recesses to camshaft side of cylinder block. Replace piston through top of the bore, using a ring clamp to compress piston rings.

Smear oil on bearing surfaces and replace cap and bolts. Fit new nuts if self-locking ring in nuts can be screwed on to bolts with the fingers, and tighten to 50 lb ft.

Piston Rings: There are two compression rings and two oil scraper rings on each piston. The top compression ring is chromed and the second plain, but as both rings are taper faced they must be fitted with the word "Top" towards the piston crown.

After removing carbon from the top, unworn part of the bore place the rings in position and check

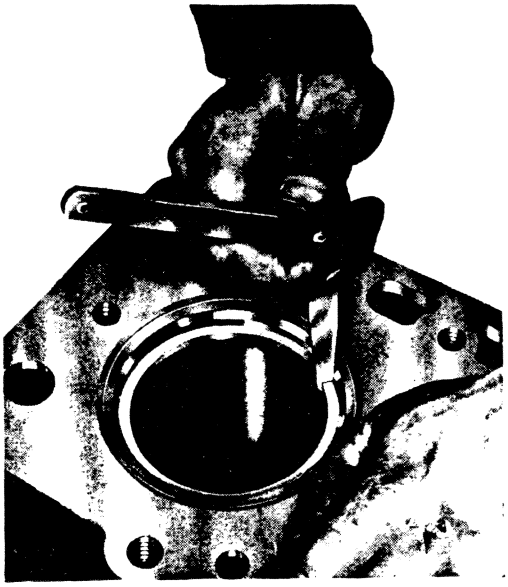

Figure 32. CHECKING PISTON RING GAP

piston ring gaps. New rings will be required if the gaps exceed 0·060 in. For further guidance on bore wear see Guidance of Wear Limits on Page 34. Excessive top ring wear may be attributed to the ingress of dusty air, due to lack of air cleaner maintenance, and excessive lower ring wear may be attributed to dirty engine oil, due to infrequent oil and filter changes. (Fig. 32.)

If the cylinder bores are worn, but not sufficiently for reboring, an oil control ring set can be fitted. These sets, which are available for both standard and oversize bores, include special top rings, which have a shoulder at the top so that the rings do not foul the ridge at the top of the bores, and spring-loaded steel scraper rings.

Pistons: As the pistons are barrel shaped and oval it is difficult to measure the skirt and land diameters accurately.

Pistons on 4600 and 3800 Tractors are the same diameter but different in height and are not therefore interchangeable. When fitting new pistons ensure that these are $6\frac{3}{4}:1$ compression ratio and do not mix $6\frac{3}{4}:1$ and $7\frac{1}{2}:1$ compression ratio pistons in the same engine. (See Page 35.) When replacing pistons check that the ring gaps are spaced round piston so that no two are in line, i.e., one above the other. Also ensure that the piston is fitted the correct way: *the gudgeon-pin hole is offset and the word "Front" stamped on the piston crown must be towards the front of the engine.*

Cylinder Bores: If the bores are scored, or worn greater than 0·010 in., they should be rebored to 0·020 or 0·040 in. oversize. To maintain balance always rebore all three cylinders to the same oversize.

To rebore the cylinder block it is necessary to remove the sealing rings from the top of the bores and after boring fit new rings with the appropriate oversize bore.

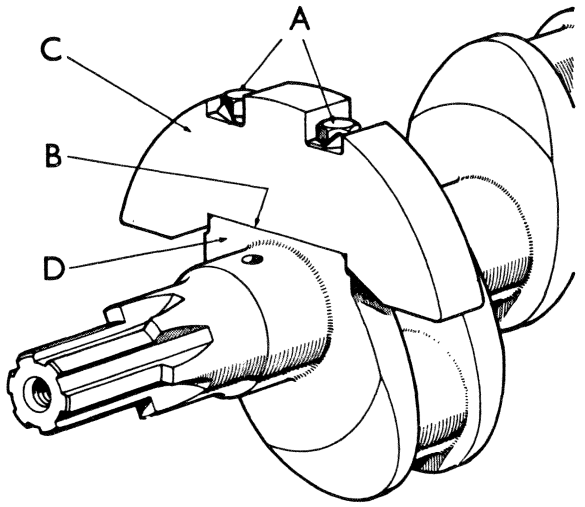

Figure 33.
CHECKING BALANCE WEIGHTS AFTER REFITTING

When balance weight bolts A are fully tightened, the gap B between the weight C and crankshaft web D must be so close that it will not accept a 0·002 in. feeler gauge

Clean out the block recess and smear the ring with Wellseal, or similar non-hardening compound, then fit the ring and wipe off the surplus compound.

Crankshaft

Crankshaft Bearings: The shell type crankshaft bearings are steel backed and faced with a thin coating of soft, anti-friction material.

Bearing shells are not interchangeable once they have been fitted and if not renewed must be replaced in their original position.

The bearing caps and shells are very accurately machined and no attempt should be made to file a bearing cap or scrape a bearing. Connecting-rod caps must only be used with their original connecting rods and main bearing caps must only be fitted to their original cylinder blocks.

Crankshaft Regrinding: If crankshaft journals

are worn, or scored, the shaft should be reground and suitable undersize bearings fitted.

The crankshaft balance weights will have to be removed before grinding and, before removal, mark the weights to facilitate reassembly in the same position. When refitting the weights, remove any sharp edges from the face of crankshaft webs to ensure that the weights can seat solidly against the shaft. Always fit new securing bolts and tabwashers, and after tightening the bolts to 40 lb ft check that a 0·002 in. feeler gauge cannot be fitted between the weight and the crankshaft. (Fig. 33.)

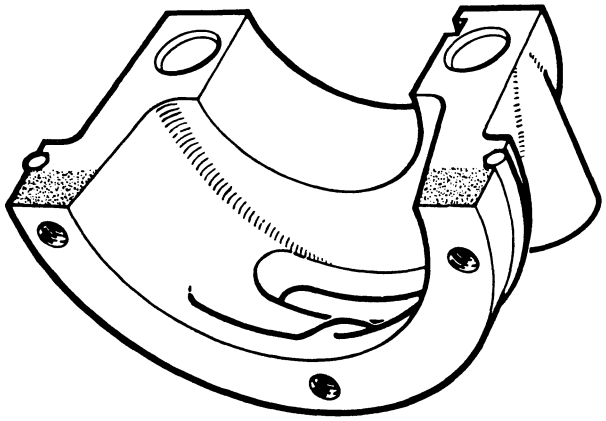

Figure 34. SEALING FRONT MAIN BEARING CAP
Apply a coating of jointing compound to the shaded area on the cap face and allow to dry for not less than five minutes before fitting the cap

Front Main Bearing Cap: When the crankshaft is being fitted to the cylinder block it is necessary to seal the joint between the front main bearing cap and the block. The leading edges of the bearing cap should be coated with Wellseal (see Fig. 34) and allowed to stand for five minutes before fitting.

Crankshaft Rear Oil Seal: Oil leaks from the rear of the engine are prevented by an oil flinger on the crankshaft and a removable oil retainer fitted with asbestos packings. This retainer, which is in two halves — one half bolted to the block and the other half to the main bearing cap — is fitted with a paper gasket. Later gaskets are in one piece but early gaskets are in separate halves and require trimming before being fitted. The two cap-head screws clamping the two halves of the retainer together must be tightened before the four setscrews which hold the retainer to the cylinder block. (Fig. 35.)

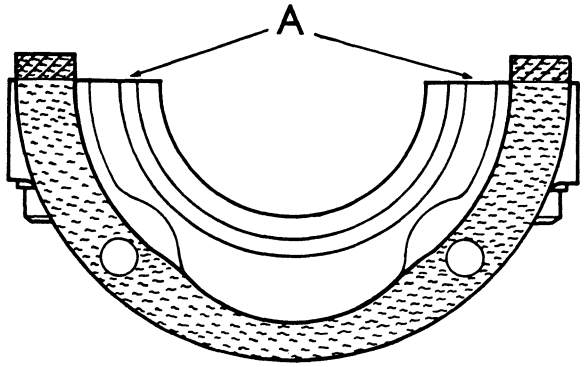

Figure 35. OIL RETAINER GASKET (EARLY TYPE)
Temporarily fit the gasket to the retainer then trim each half gasket flush with the retainer face A, so that when installed the two halves of the gasket will touch but not overlap

When fitting new packings in oil retainer, treat outside periphery of one packing with adhesive, to prevent any possibility of movement, and ensure that ends of packings are flush with retainer faces before clamping retainer on crankshaft to press packings firmly into position.

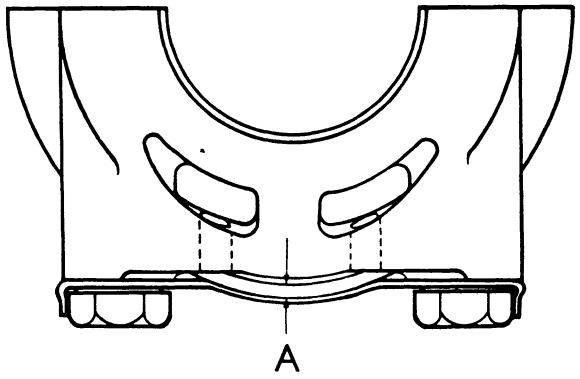

Figure 36.
REAR MAIN BEARING CAP TABWASHER
To provide adequate oil drainage the gap A between the centre of the tabwasher and bearing cap must not be less than $\frac{1}{8}$ in. when the cap bolts are fully tightened

The rear main bearing cap tabwasher covers the drain holes through the cap and it is essential that the tabwasher does not obstruct the holes. Ensure that the tabwasher is shaped so that when the bolts are fully tightened the centre of the washer is at least $\frac{1}{8}$ in. clear of the drain-hole. (Fig. 36.)

Timing Gears

The camshaft is gear driven at the front of the engine and the gears are exposed when the timing cover is removed. The distributor is driven from the camshaft and the drive gear is removed when the housing is withdrawn.

Timing Cover Removal: Drain the cooling system and remove the battery, air cleaner and radiator. Release the three dynamo mounting bolts, push dynamo inwards and remove fan belt. Unscrew pulley retaining bolt and remove crankshaft pulley: this is on splines and should not be very tight. Remove timing cover bolts, "break" the joint and remove the cover. A small quantity of oil will be released when the cover is removed.

Timing Cover Oil Seal: Renew the oil seal cover if there are any signs of oil leakage. Refit the case without oil seal and fit Service Tool 962560 over the crankshaft until it enters the seal location and holds it centrally over the crankshaft. Bolt timing cover in position, withdraw tool out of case and use spigot end of tool to push seal into cover, ensuring that seal lip is towards inside of timing case.

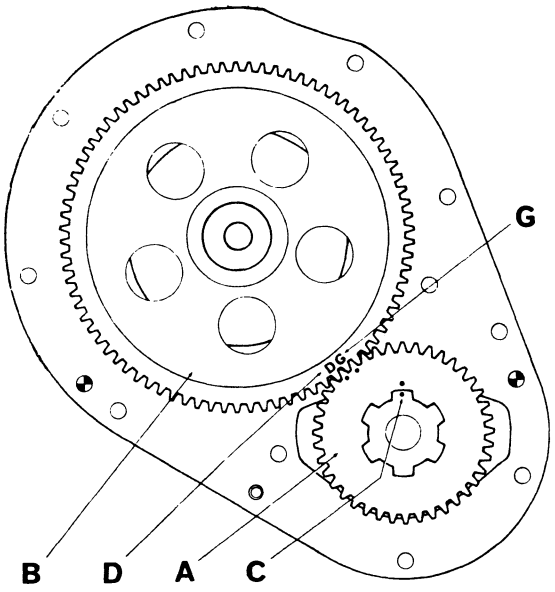

Figure 37. TIMING GEAR MARKINGS

A. Crankshaft gear
B. Camshaft gear
C. Crankshaft spline mark
D. Camshaft gear mark – diesel
G. Camshaft gear mark – gasoline

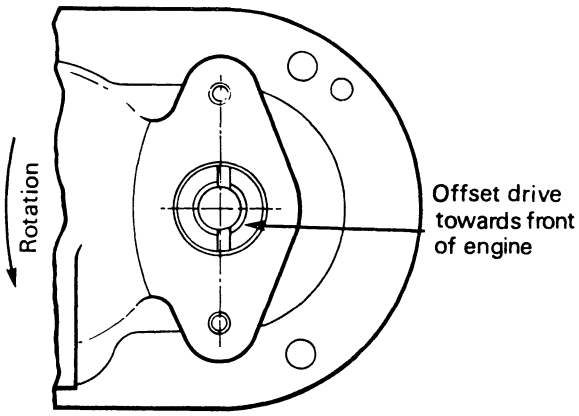

Figure 38. DISTRIBUTOR DRIVE GEAR TIMING

When the engine is set with No. 1 piston at TDC on firing stroke the distributor driving slot should be in line with the distributor mounting bolt holes and offset towards the front of engine

Timing Gear Removal: Before disturbing the timing gears turn the engine until the tooth marked 'G' on the camshaft gear is between the two centre-punch marks on the crankshaft gear (Fig 37): this will enable the gears to be refitted without having to turn the engine or camshaft. Remove camshaft gear bolt and withdraw the gear. The crankshaft gear is retained on the shaft splines by the crankshaft pulley and if tight can be removed with an extractor if care is taken not to damage the teeth.

Distributor Drive Gear Removal: Disconnect the ball joint from the carburetter and remove the short rod connecting the governor cam plate to the relay lever. Scribe a mark across the distributor clamp and governor cover then remove the distributor by removing the two bolts into the cover. Do not release the bolt on the side of the clamp.

Disconnect balance spring by removing the anchor plate from the cylinder block and remove the four nuts on housing cover. The cover can then be removed, but take care of the governor push rod as this will drop out when the cover is lifted off.

Disconnect hand throttle rod from relay lever and lift governor housing, complete with drive housing, out of cylinder block. Place the assembly on bench, remove the two remaining bolts then separate the two housings.

To remove the drive gear from its housing, first remove the governor drive gear (this has two $\frac{5}{16}$ UNC extraction holes), then remove the circlip and press gear out of the housing and bearing.

Refitting the Distributor Drive Gear: Having checked the bearing and bush, and renewing if worn, reassemble in the reverse order of dismantling. Pack the ball bearing with grease and press governor drive gear firmly into position. Assemble the two housings together then refit to engine. As the gear must be remeshed in its original position, set the gear so that the distributor drive slot is offset towards the front of engine and in line with the four o'clock position. When the gear is pushed into its mesh it will then turn into the correct six o'clock position. If the engine has been turned whilst the gear is removed, or if the engine was not set in the correct position before removing the distributor, it will be necessary to retime the distributor drive.

Timing the Distributor Drive: Remove the valve rocker cover and turn the engine until the inlet valve on No. 1 cylinder closes, then insert the timing peg into the TDC hole in the flywheel housing (Fig. 17) and continue turning the engine until the timing peg drops into the indentation in the flywheel. With the engine in this position the driving slot in the gear should be at six o'clock and offset towards the front of the engine when assembly is fitted and drive gear fully meshed. As the drive gear will turn as it is pushed into mesh with the camshaft, set the gear so that the slot is offset towards the front and pointing to four o'clock, then look down into the cylinder block and check the position of the driving slot in the oil pump spindle: this should be at eight o'clock position to ensure engagement and can be turned with a screwdriver.

With the engine and distributor gear positioned as described, fit the assembly into the cylinder block and push down into position. If the housing cannot be pushed fully "home" do not use force but lift it out again and reposition the oil pump spindle as the slot is probably not in line with the driving pin.

When the gear housing has been refitted, check that the drive slot is at six o'clock (Fig. 38) then pack the thrust race with grease and hold the push rod in cover until the cover has been replaced. Replace the distributor, aligning the scribe marks on the clamp

and cover so that the original timing is obtained, then connect the governor linkage.

Camshaft: The camshaft drives the distributor through a skew gear. This gear is a press fit on to the camshaft shoulder and is located by a Woodruff key.

The shaft is supported at the front by a housing bolted to the cylinder block. This housing can only be fitted in the correct position as the bolt holes are not equally spaced. This ensures that the lubrication ports in the housing are in the correct position to lubricate the skew gears, timing gears, etc.

The camshaft also drives the engine speed indicator by a skew gear, which is an integral part of the shaft, situated between the cam lobes for No. 3 cylinder. The engine speed indicator driven gear is mounted in a housing which fits into the cylinder block. The housing is sealed by an 'O' ring and located by a setscrew. (Fig. 39.)

Camshaft Removal:

1. Drain the water and remove radiator.
2. Remove distributor and drive housing.
3. Remove fan belt, withdraw crankshaft pulley and remove timing cover.
4. Cut locking wire and remove camshaft gear retaining bolt (see Page 28).
5. Withdraw camshaft gear and remove locating housing — three fastening bolts.
6. Remove rocker cover, rocker shaft assembly and push rods.
7. Remove tappet covers, lift up each tappet and fit $\frac{1}{2}$ in. internal diameter 'O' ring on each. This stops the tappets falling and preventing the camshaft from being removed.

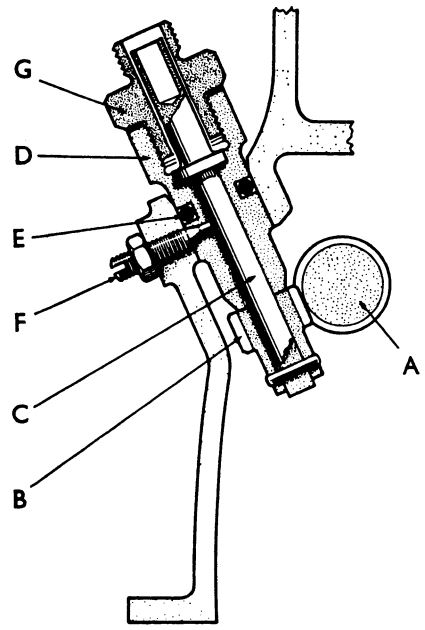

Figure 39. ENGINE SPEED INDICATOR DRIVE

A. Camshaft **B.** Driven gear **C.** Drive spindle
D. Housing **E.** "O" ring **F.** Locating screw
G. Adaptor

8. Remove engine speed indicator drive gear and housing complete.
9. Withdraw camshaft forwards out of block.

Replace camshaft in the reverse order to removal — not forgetting to remove 'O' rings from tappets — retime camshaft gear and reset tappet clearances.

Governor and Throttle Controls

Operation: The throttle linkage is not directly connected to the carburetter-throttle butterfly but is connected to the engine governor. The governor controls the position of the carburetter butterfly according to the position of hand lever and engine load, and therefore maintains the engine speed set by position of the hand lever. (Fig. 40.)

When a foot-throttle control is fitted to tractors equipped with an engine stop-control the foot pedal is directly connected to the carburetter butterfly, but on later tractors not fitted with a stop-control the hand lever and foot pedal are connected to the governor through the same linkage. (Fig. 41.)

Adjustment: Before making any adjustments first apply a few drops of oil to all linkage joints and pivots, then check that the linkage is free to operate.

The governor cannot operate correctly if the linkage is fouling on any obstruction or the joints tight. If the governor surges or operates jerkily, first check the points listed on Page 31 then adjust the governor.

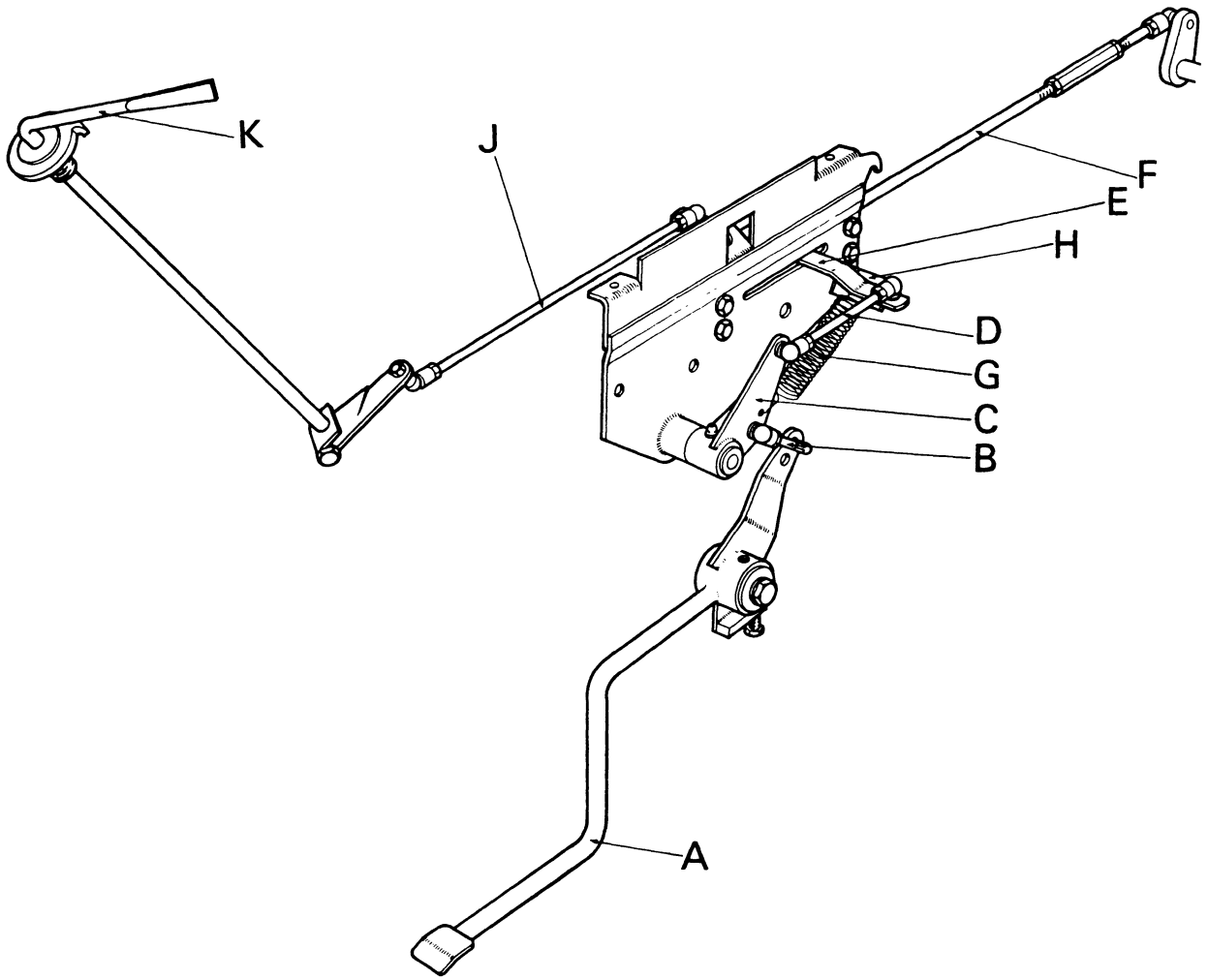

Figure 40. THROTTLE CONTROLS (from Tractor Nos. 4600/900422 and 3800/650358)

A. Accelerator pedal. **B.** Connecting link: This must be set so that pedal is resting on footplate when governor cam plate is in maximum speed position. **C.** Bell-crank lever. **D.** Operating rod (foot): Set this rod so that ball joint centres are $4\frac{3}{4}$ in apart on 4600 Tractors and $3\frac{7}{8}$ in apart on 3800 Tractors. **E.** Operating link. **F.** Connecting rod. **G.** Return spring. **H.** Spring anchor: Position this anchor so that return spring has sufficient tension to hold linkage in closed position. **J.** Operating rod (hand): Adjust the length of this rod so that when both hand and foot throttles are closed the operating link is at right-angles to fuel tank support. **K.** Hand lever.

Governor Surge: If engine surges, check that this ball joint is completely free to pivot. If necessary reduce ball with 240 grade emery, but ensure that ball remains smooth and round.

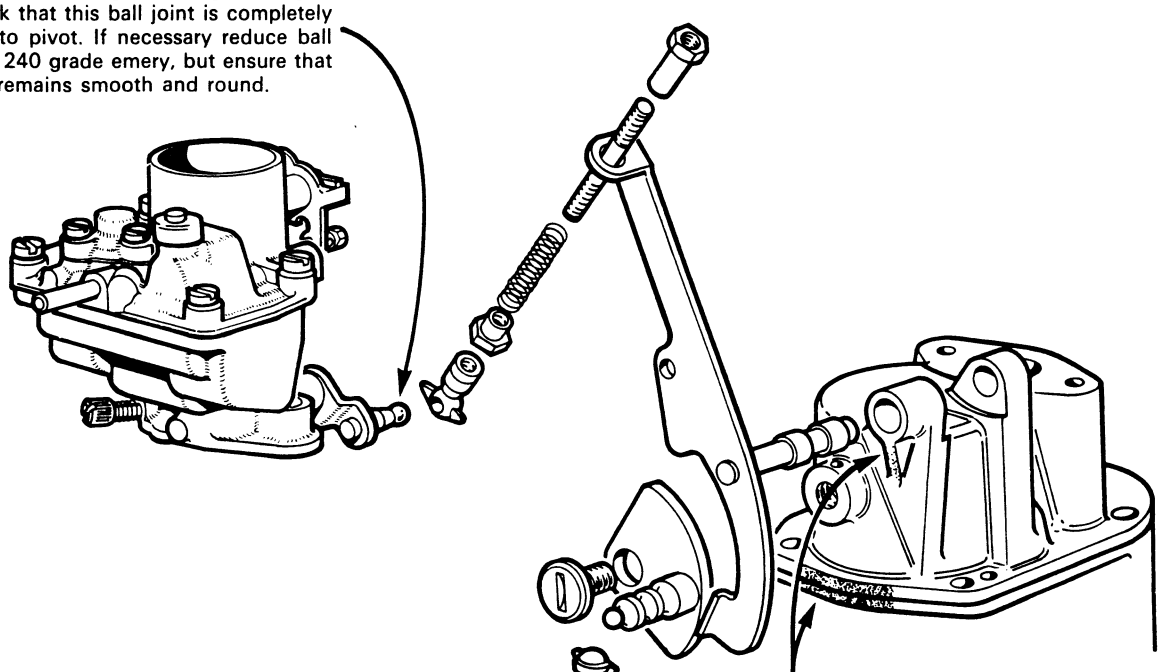

Jerky Throttle Operation: Check that governor cam is not touching shaded areas of cover. If necessary, grind casting to give adequate clearance.

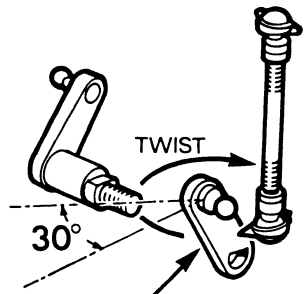

If throttle operates jerkily from idling to half-throttle, smoothly round off the top corner of this cam with a wet stone.

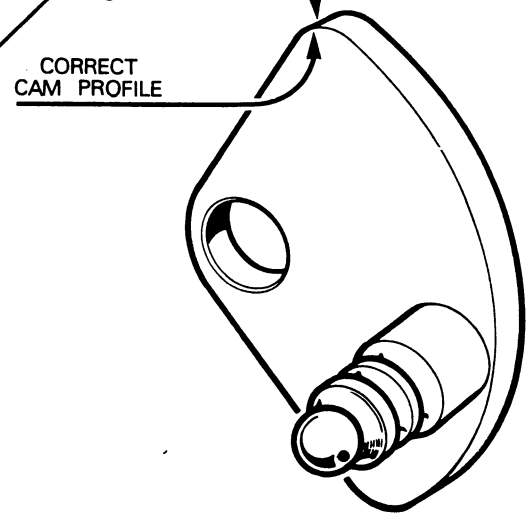

Governor Cam Locks: This will only occur on engines before 3800/1244 and 4600/1278, which were not fitted with a cam stop, and can be cured by modifying this lever. Remove lever, heat with gas torch and twist 30° clockwise. Refit lever with ball towards cylinder block and reduce length of connecting rod to maintain hand throttle setting.

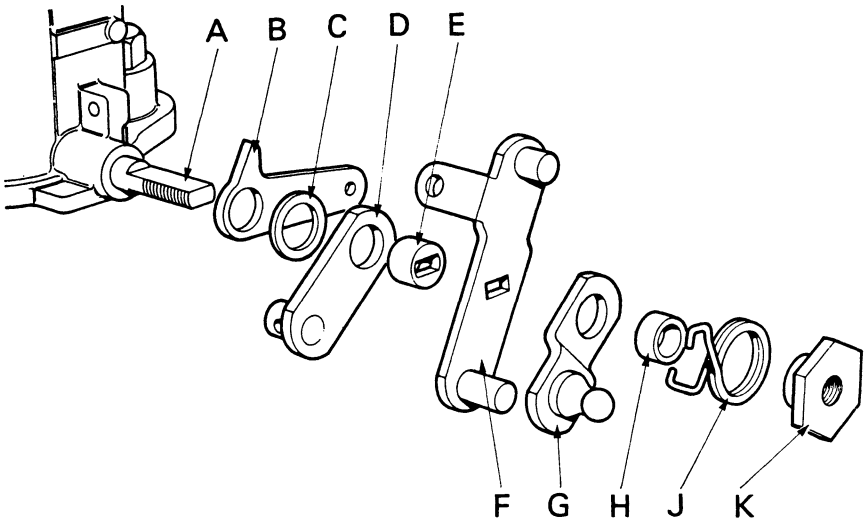

Figure 41.

CARBURETTER LINKAGE WITH FOOT THROTTLE AND STOP CONTROL

- **A.** Carburetter spindle
- **B.** Fast idling lever
- **C.** Special washer
- **D.** Lever – foot throttle
- **E.** Sleeve
- **F.** Lever – carburetter spindle
- **G.** Lever – hand throttle
- **H.** Sleeve
- **J.** Spring
- **K.** Special nut

1. Release the stop screws on steering-column throttle-lever quadrant and move the stops outwards to the end of their slots.
2. Disconnect the long control rod at its forward end where it is connected to the relay lever on governor housing.
3. Remove the short rod connecting relay lever to cam plate. Measure length of the rod and set it to the length shown in Fig. 42. Smear ball cups with grease then refit rod.
4. Turn governor cam plate fully upwards so that it locks governor lever in the minimum speed position, and whilst holding the cam in position reconnect the forward end of long control rod. With the rod connected and the cam held in this position the hand lever should be just clear of the quadrant idling stop. If the lever is touching the stop, lengthen rod a little until lever clears the stop then tighten quadrant stop screw.
5. Start engine and allow it to reach working temperature. Move hand-throttle lever into the idling position and disconnect throttle rod from carburetter lever, taking care not to over-speed the engine. Increase the engine speed to 1,400 rev/min by resetting the stop screw on carburetter lever. On tractors fitted with a stop control there will not be a screw fitted and it

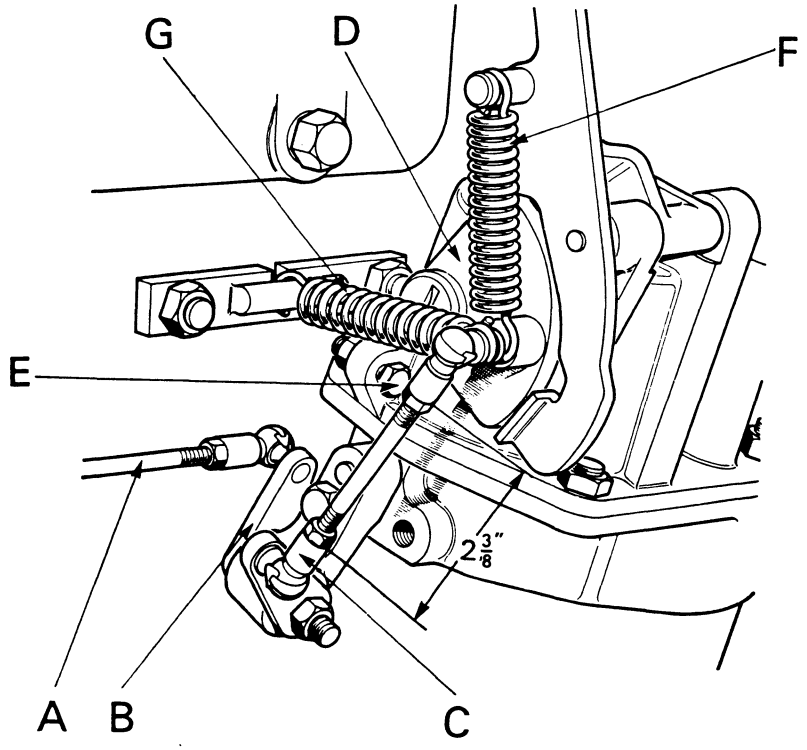

Figure 42.

GOVERNOR CAM PLATE

- **A.** Control rod
- **B.** Relay lever
- **C.** Connecting rod
- **D.** Cam plate
- **E.** Stop screw – maximum speed
- **F.** Governor spring
- **G.** Balance spring

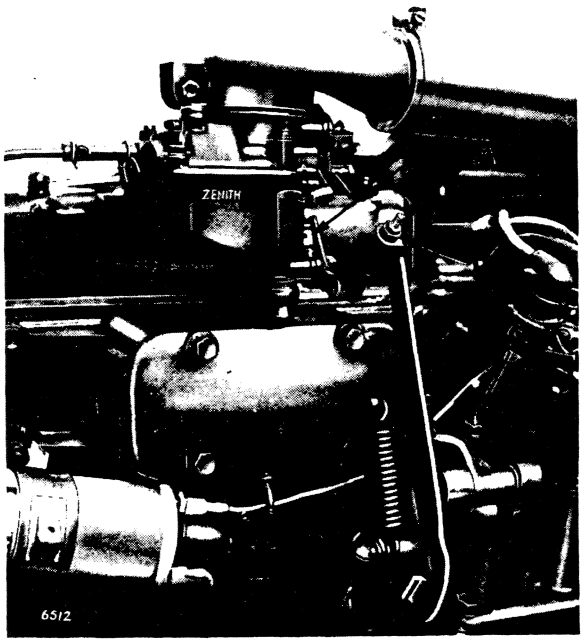

Figure 43. GOVERNOR ADJUSTMENT

A. Connecting rod
B. Carburetter idling stop screw
C. Governor thrust button
D. Idling mixture screw
E Governor idling adjusting nut

will be necessary to temporarily fit a 2 BA screw (Part No. 16569) in the throttle lever.

6. After releasing locknut, unscrew governor thrust button then slowly screw the button inwards until it just makes contact with governor push rod, then *screw in a further one-and-a-quarter turns* and tighten locknut. (Fig. 43.)

7. Unscrew carburetter idle screw to reduce idling speed to 500 rev/min. Screw the mixture control screw fully in and then slowly unscrew until maximum idling speed is obtained. Reset idling screw to restore 500 rev/min idling speed and screw mixture screw in until speed just begins to fall then screw out half-a-turn.

8. Reconnect short connecting rod to carburetter and unscrew carburetter idling screw one full turn; on tractors fitted with a stop control the screw will have to be removed, otherwise the stop control will not operate. With hand-throttle lever in the idling speed position set the adjusting nut on connecting rod to give an idling speed of 500 rev/min then tighten locknut.

9. Open hand throttle until engine speed reaches 2,350 rev/min then set stop screw on governor housing so that the cam plate cannot be moved past this position. Set the maximum speed stop on quadrant so that it prevents movement of the hand lever past the point where cam plate reaches its stop.

On tractors not fitted with a cam plate stop, the simple modification shown on Page 31 will give positive control of maximum engine speed.

Removing the Governor Assembly: After removing the distributor and governor housing cover (see Page 15) remove the two bolts attaching the spindle housing to gear housing then lift out the weights, spindle and gear, taking care of the thrust washer under the gear. (Fig. 44.)

Governor Weights: If the weight pivots become excessively worn renew the weights, carrier and spindle, which is supplied as an assembly. The gear is pressed on to the spindle and must be tight as there is no key. Bushes are fitted in the spindle and gear housings and the gear housing bush should be fitted so that the hole is in line with the oil-feed hole. Ream bushes to size after fitting: upper bush to 0·625 in and lower bush to 0·500. Push rod must be quite free in cover bore. Upper track of thrust race must be a press fit on push rod but lower track must be completely free. Renew push rod if bearing is damaged or upper track loose.

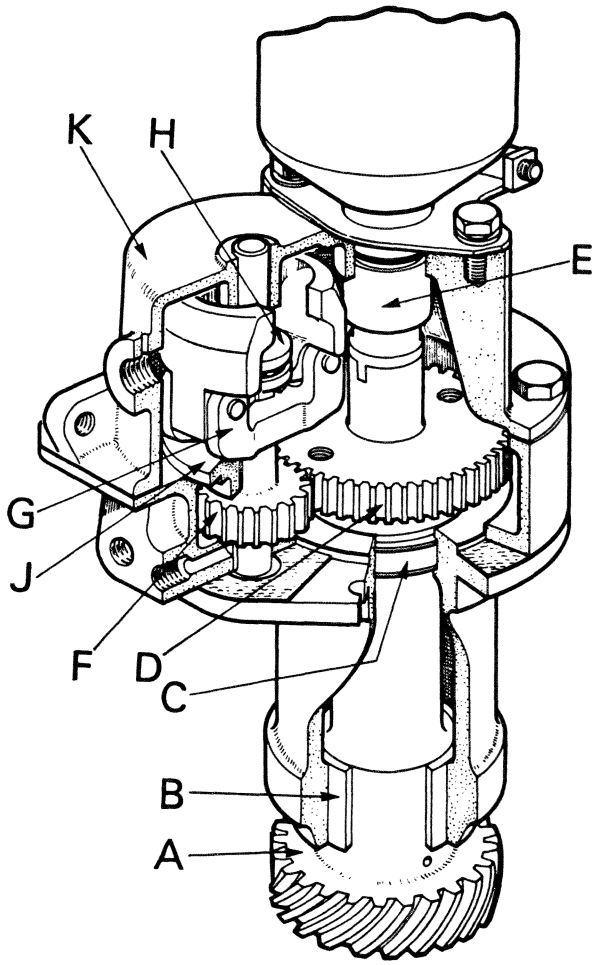

Figure 44. GOVERNOR ASSEMBLY

A. Distributor drive gear
B. Lower bush
C. Upper bearing
D. Governor driving gear
E. Distributor
F. Governor driven gear
G. Weights and spindle
H. Thrust bearing
J. Spindle housing
K. Cover assembly

Assembling the Governor: Smear the thrust washer with grease so that it will hold itself in position under the gear, then replace the weight assembly in the gear housing. Fit the two bolts through the spindle housing, fitting copper washers under the bolt heads to prevent oil leakage. Pack the thrust bearing with grease then fit it into the housing cover and hold it in place so that it cannot fall out as the cover is refitted. When the cover has been replaced, refit the distributor and connect the throttle linkage, then adjust the governor. (See Page 30.)

Engine Removal and Replacement

On 3800 Tractors the engine can be lifted out of the main frame after first removing fuel tank and gearbox cover.

On 4600 Tractors the clutch cannot be removed with the gearbox in position and the easiest way of removing the engine is to "split" the tractor frame. The clutch and flywheel can then be removed and the engine lifted out of the frame.

3800 Engine Removal

1. Remove bonnet, drain radiator and cylinder block. If the fuel tank is full drain some off to reduce the weight.
2. Drain engine sump and disconnect battery.
3. Disconnect hoses and remove radiator.
4. Disconnect fuel pipe from upper side of fuel tank.
5. Disconnect engine speed indicator cable and instrument panel wiring.
6. Disconnect engine throttle and stop controls.
7. Remove fuel tank complete with instrument panel.
8. Remove steering box and column, disconnecting steering drop-arm from cross shaft.
9. Remove the two figure-of-eight springs from clutch release fork. These are accessible through cover in bottom of clutch housing.
10. Remove starter and take the bolts from gearbox cover: 17 bolts to frame, 5 bolts through rear axle. **Note that one of the gearbox cover bolts is inside the steering-box cavity.** (Fig. 45.)
11. Lift gearbox cover off main frame, taking care that no dirt is allowed to fall into main frame.
12. Release circlip on clutch driveshaft so that the muff coupling can be slid forward until it is clear of gearbox shaft and remove the three bolts attaching the support snout to main frame.

As it is necessary to withdraw the power take-off cardan shaft out of the clutch, the transmission oil should be drained into a clean container, the p.t.o. removed and the cardan shaft withdrawn so that it is clear of the clutch driveshaft.

Remove engine sump and remove the five engine holding-down bolts from underside of frame: two of these are at the front, two at the rear and one under the oil pump.

Remove the remaining bolts from the lower flange of cylinder block then lift engine vertically out of frame. Ensure that the clutch driveshaft and support snout are lifted clear of frame and take care not to damage oil pump when lowering engine on to the stand or bench.

Replace engine in the reverse order to removal, using new gaskets and seals. Clean main frame and cylinder block faces, ensuring that all traces of the old gasket are removed. Smear main frame face with jointing compound, also both sides of the gaskets before placing them in position. A rubberised jointing compound may be used in preference to Wellseal. Fit new bearing-cap seals, pushing ends of seals into holes in block so that seals fit closely in bearing cap grooves.

Two $\frac{3}{8}$ UNC studs temporarily screwed into main frame at opposite points will assist in locating the engine and allow it to be lowered into position without disturbing the gaskets. Note that the clutch shaft is inserted in the clutch, and the support snout and muff coupling are in position on the shaft, before lowering the engine into position.

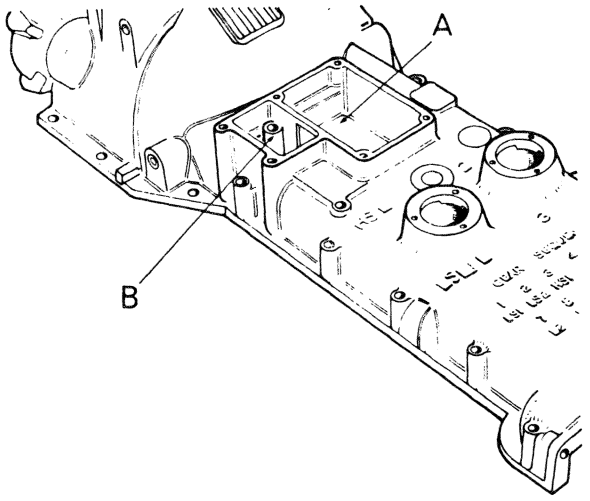

Figure 45. GEARBOX COVER – 3800 TRACTORS
A. Steering box oil bath **B.** Main frame bolt hole

4600 Engine Removal

1. Disconnect engine speed indicator cable, engine stop controls, and wiring to the instrument panel.
2. Drain and remove fuel tank, complete with instrument panel.
3. Drain radiator and cylinder block, disconnect hoses and remove radiator.
4. Drain engine sump then remove sump cover; remove the two cylinder block bolts from inside the frame and the third bolt from below the distributor drive.
5. As it is necessary to "split" the tractor main

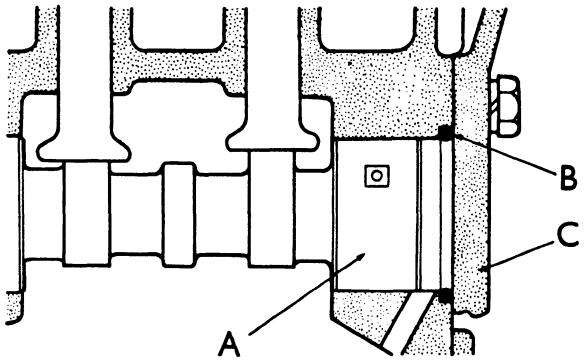

Figure 46.
CAMSHAFT REAR BEARING SEAL – 4600 TRACTORS

A. Camshaft rear journal **B.** "O" ring
C. Flywheel housing

frame, place adequate supports under rear main frame to hold the frame in line with the flywheel housing. Drive suitable wooden wedges between each side of the axle beam and tractor frame, so that the front half of the tractor will remain vertical when it is drawn forward away from the rear half of tractor.

6. Remove vent cover from the underside of flywheel housing and push a trolley jack under the front of tractor until the lifting pad is under flywheel housing. With a small wooden block between the jack and flywheel housing, support weight of engine and remove bolts attaching the flywheel housing to rear main frame and clutch cover, then carefully pull the trolley jack forward to "split" the tractor. Adjust the height of trolley jack and also rear main frame jack, so that the two halves of tractor remain in line and pull the front half forward until there is sufficient room to remove the clutch. Remove trolley jack, allowing front frame to rest on suitable supports; remove clutch, flywheel and flywheel housing. After removing the bolts from lower flange of cylinder block, lift engine unit from frame.

Replace engine in the reverse order to removal, using new gaskets and seals. Clean cylinder block and main frame faces, ensuring that all traces of the original gasket are removed. Smear main frame face with jointing compound, also both sides of the gaskets before placing them in position. A rubberised jointing compound may be used in preference to Wellseal. Fit new main bearing cap seals, placing the ends of seals into the holes in the cylinder block so that the seals fit closely in the bearing cap grooves.

Before refitting the flywheel housing ensure that the "O" ring is fitted in the camshaft rear bearing bore, otherwise oil leakage will take place between the cylinder block and housing faces. (Fig. 46.)

Two $\frac{3}{8}$ UNC studs temporarily screwed into main frame will assist in locating engine and prevent any possibility of disturbing the gaskets. The studs should be screwed into frame at opposite sides and removed after the engine is lowered into position. Screw all engine mounting bolts in but do not tighten until flywheel housing has been bolted in position. After firmly tightening the flywheel housing bolts, replace flywheel and clutch, ensuring that the two drive plates are centralised, so that the driveshafts can enter the clutch when the two halves of main frame are brought together. Figure 47 gives the dimensions of a pilot shaft for aligning the clutch plates during assembly.

Before reassembling the two halves of tractor, check that the p.t.o. cardan shaft has not been pulled outward. With the p.t.o. in high ratio, turn and push the cardan shaft, to ensure that the coupling on the rear end of the shaft is engaged on the p.t.o. input shaft splines.

Refit the two halves of tractor, lifting front with the trolley jack, so that the driveshafts enter clutch. Two long studs temporarily screwed into main frame flange will assist in holding the two frames in line until the dowels are entered. It will probably be necessary to turn engine as the driveshafts enter clutch to engage the clutch plate splines on the driveshafts. Refit main frame bolts and tighten progressively by diagonal selection, so that the frame flanges are not distorted.

Remove the jacks, refit sump cover and radiator. Refill with oil and water, replace fuel tank and instrument panel.

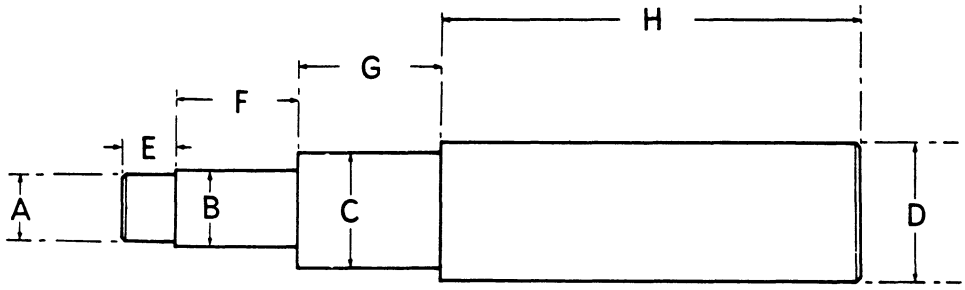

Figure 47. CLUTCH PLATE PILOT

A. 0·874 in. **B.** 0·915 in. **C.** 1·420 in. **D.** 1·771 in. **E.** $\frac{5}{8}$ in. **F.** $1\frac{1}{2}$ in. **G.** $1\frac{3}{4}$ in. **H.** 5 in.

DIMENSIONAL DATA

Engine Details	4600 Tractor	3800 Tractor
Engine designation	355101	349101
Bore	$3\frac{15}{16}$ in	$3\frac{15}{16}$ in
Stroke	$4\frac{1}{2}$ in	4 in
Number of cylinders	3	3
Cubic capacity	164·4 cu in	146·1 cu in
Compression ratio	6·75 : 1	6·75 : 1
Fuel grade	U.S. regular gasoline, 92–93 octane	
Speed range	500 to 2,350 rev/min	
Maximum power at 2,200 engine rev/min	50 BHP	42 BHP
Maximum torque at 1,400 engine rev/min	140 lb ft	125 lb ft
Maximum PTO power at 2,200 engine rev/min	46 BHP	38 BHP
Maximum drawbar pull (ballasted)	6,000 lb	4,750 lb
Maximum drawbar horsepower	40	33

Tightening Torques

Big-end bearing nuts	50 lb ft
Camshaft gear bolt	40 lb ft
Crankshaft balance weight bolts	40 lb ft
Crankshaft pulley bolt	90 lb ft
Cylinder head nuts and bolts	90 lb ft
Cylinder head studs into block	25 lb ft
Flywheel housing to engine bolts	30 lb ft
Flywheel nuts	50 lb ft
Front extension to main frame bolts	120 lb ft
Fan blade bolts	25 lb ft
Main bearing cap bolts	120 lb ft
Main frame to engine bolts	30 lb ft
Main frame to flywheel housing bolts	50 lb ft
Oil filter bowl bolt	10 lb ft
Sump to main frame bolts	20 lb ft
Valve rocker adjusting nuts	14 lb ft

The following figures apply to bolts of standard material with either coarse (UNC) or fine (UNF) threads and may be used for all bolts and nuts not listed in the previous table.

Thread Diameter	Torque
$\frac{1}{4}$ in	7 lb ft
$\frac{15}{16}$ in	15 lb ft
$\frac{3}{8}$ in	25 lb ft
$\frac{7}{16}$ in	45 lb ft
$\frac{1}{2}$ in	65 lb ft
$\frac{5}{8}$ in	110 lb ft
$\frac{3}{4}$ in	140 lb ft

Capacities

	Imperial	U.S. Measure
Cooling system (4600)	18 pt	22 pt
Cooling system (3800)	15 pt	18 pt
Engine lubricating oil	11 pt	$6\frac{1}{2}$ pt
Steering-box oil	2 pt	$2\frac{1}{2}$ pt
Air cleaner oil bath	$1\frac{1}{4}$ pt	$1\frac{1}{2}$ pt
Transmission oil	5 gal	6 gal
Fuel tank (4600)	$11\frac{1}{2}$ gal	$13\frac{3}{4}$ gal
Fuel tank (3800)	8 gal	$9\frac{1}{2}$ gal

Wear Limits

The following figures are only intended to serve as a guide to determine when a component should be renewed:

Crankshaft big-end journals should be reground if ovality exceeds 0·005 in.

Crankshaft main-bearing journals should be reground if wear exceeds 0·005 in.

Piston rings should be replaced if the ring gap exceeds 0·060 in. when checked in the unworn part of the cylinder.

When there is evidence of ring and slight bore wear causing oil consumption, fit oil control rings. These should control oil consumption if the bore wear is not greater than 0·010 in. and are available to suit either standard or oversize bores. If oil consumption exists and oil control rings have already been fitted it will be necessary to rebore the cylinders and fit oversize pistons.

Piston groove clearance should not exceed 0·010 in. when checked with a new ring.
Oversize valves should be fitted if the bore in the cylinder head is worn in excess of 0·006 in.
For details of oversize reamers and seat cutter pilots see Service Tool Leaflet A28.

Pistons

Nominal diameter	$3\frac{15}{16}$ in
Skirt diameter	3·9371 — 3·9367 in
Height (4600) $6\frac{3}{4}$: 1 ratio	3·379 in
Height (3800) $6\frac{3}{4}$: 1 ratio	3·750 in
Height (4600) 7·5 : 1 ratio	3·756 in
Height (3800) 7·5 : 1 ratio	4·006 in
Gudgeon pin bore — red spot	1·2501 — 1·2502 in
green spot	1·2500 — 1·2501 in

Piston Rings

Ring Gaps	
Top ring	0·012 — 0·019 in
No. 2 compression	0·011 — 0·016 in
Nos. 3 and 4 scraper rings	0·011 — 0·016 in
All oil control rings	0·011 — 0·016 in
Compression ring, clearance in groove	0·0015 — 0·0035 in
Scraper ring, clearance in groove	0·0015 — 0·0025 in
Gudgeon pin diameter	1·250 — 1·2498 in
(Push-fit in connecting rod bush, light-drive fit in piston)	

Bore Sizes (new):

Standard	3·9396 — 3·9388 in
Oversize 0·020 in	3·9596 — 3·9588 in
Oversize 0·040 in	3·9796 — 3·9788 in

Sealing Ring (internal diameter) bore:

Standard	3·944 — 3·942 in
Oversize 0·020 in	3·964 — 3·962 in
Oversize 0·040 in	3·984 — 3·982 in

Valve Clearance (set cold):

Inlet	0·010 in
Exhaust	0·007 in

Valve Springs:

Inlet (yellow spot)	
Free length	2·127 in
Length at 36–40 lb load	1·646 in
Length at 73–81 lb load	1·148 in
Exhaust (blue spot)	
Free length	2·132 in
Length at 43–47 lb load	1·608 in
Length at 78–86 lb load	1·180 lb

Valve Stem Diameters (inlet and exhaust):

Standard	0·3732 — 0·3722 in
Oversize 0·010 in	0·3832 — 0·3822 in
Oversize 0·020 in	0·3932 — 0·3922 in
Valve seat angle	45°
Valve guide bore	0·375 — 0·374 in
Valve tappet diameter	0·624 — 0·623 in

Valve Seat Inserts

Insert diameter	Inlet	1·631 — 1·630 in
Cylinder head counterbore diameter	Inlet	1·625 — 1·626 in
Insert diameter	Exhaust	1·630 — 1·629 in
Cylinder head counterbore diameter	Exhaust	1·625 — 1·626 in

Valve Timing:

Inlet opens	1° after top dead centre
Inlet closes	47° after bottom dead centre
Exhaust opens	27° before bottom dead centre
Exhaust closes	19° after top dead centre

(Note that due to the use of rapid lift cams these figures cannot be used for timing the engine.)

Fuel System:

Carburetter	Zenith type 34 IVN
Choke tube	26 mm
Main jet	87*
Compensating jet	127*
Slow-running jet	45
Full throttle air bleed	1·15 mm dia
Part throttle air bleed	4·0 mm dia
Needle valve height	1·5 mm (with 2 mm washer)
Fuel feed pump	AC-Delco E/FP64887A
Static delivery pressure	2–3½ lb sq in

*On both 4600 and 3800 Tractors the jet sizes have been changed from 95/95 to 87 main and 127 compensating. It is recommended that the latest size jets are fitted to earlier tractors but if 95/95 jets are replaced by 87/127 jets on 3800 Tractors it is essential to also fit a larger paper element pre-cleaner (Unit U1159).

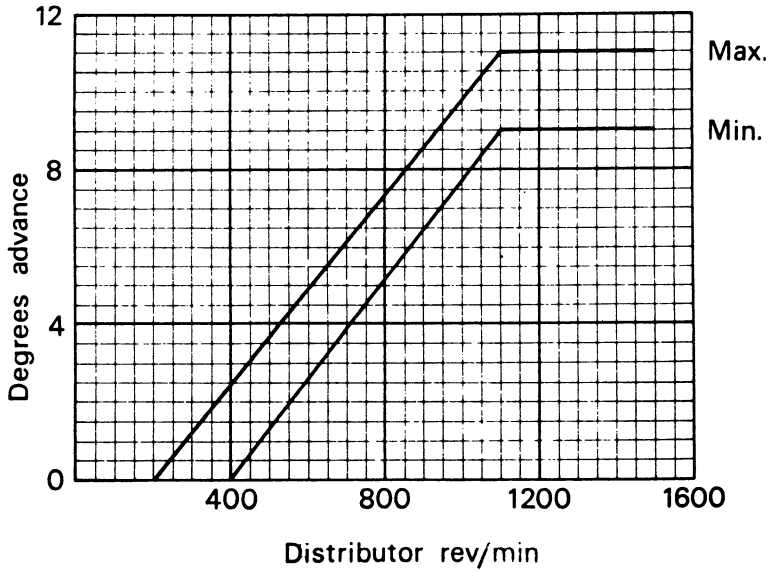

Figure 48. DISTRIBUTOR ADVANCE GRAPH

Ignition System:

Spark plugs	AC-Delco type 44XLS
Spark plug gap	0·025 in
Distributor	AC-Delco 7953595
Contact breaker point gap	0·020 in
Dwell angle	36°
Automatic advance	see graph
Ignition timing (static)	16° BTDC
(This position corresponds to the SP mark on the flywheel housing.)	
Distributor shaft end-float	0·002 — 0·005 in
Ignition coil	12 volt, AC-Delco 7953609

Oil Pump:

Spindle diameter	0·4895 — 0·4900 in
Spindle bush bore	0·4905 — 0·4925 in
Rotor width	1·1865 — 1·1855 in
Housing depth	1·1890 — 1·1875 in
End float	0·001 — 0·0035 in
Pump rotor backlash	0·020 — 0·026 in

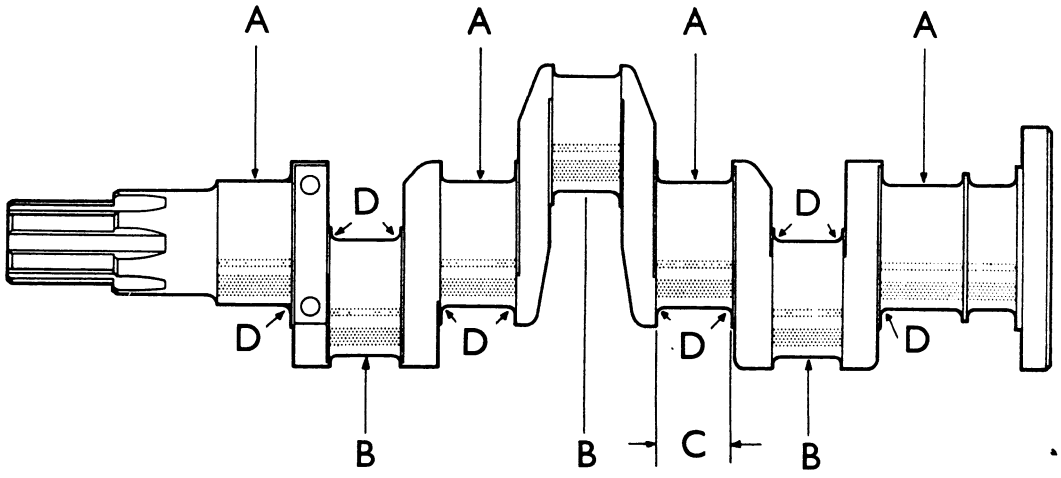

Figure 49. CRANKSHAFT DIMENSIONS

A. Main journal diameters **B.** Big end journal diameters **C.** No. 3 journal width **D.** Fillet radius

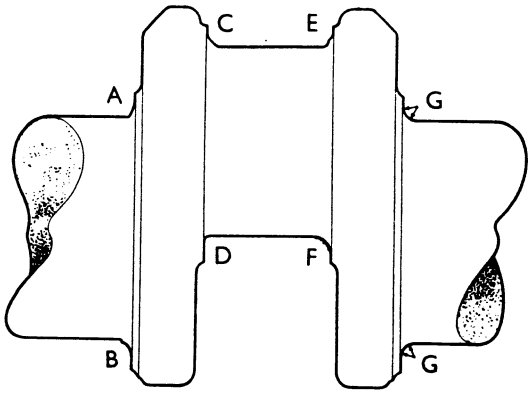

Figure 50.
EXAMPLES OF REGROUND FILLET RADII

Incorrect
- **A.** No radius
- **B.** Radius not smoothly blended
- **C.** Radius too large
- **D.** Radius too small
- **E.** Radius too small
- **F.** Radius roughly finished

Correct
- **G.** Correct radius, smoothly finished and correctly blended

Crankshaft:

Main journal diameter	
Standard size	2·4995 — 2·4990 in
Undersize 0·010 in	2·4895 — 2·4890 in
Undersize 0·020 in	2·4795 — 2·4790 in
Undersize 0·030 in	2·4695 — 2·4690 in

When regrinding crankshaft it is important that the original bearing fillet radius is maintained. It is also important that the surface of the radius is as smooth as the surface of the journal and that the radius is smoothly blended into both surfaces. A fillet that is incorrectly radiused, roughly finished or not smoothly blended, weakens a shaft and may cause fatigue failure during service.

Big end journal diameter	
Standard size	2·3735 — 2·3730 in
Undersize 0·010 in	2·3635 — 2·363 in
Undersize 0·020 in	2·3535 — 2·3530 in
Undersize 0·030 in	2·3435 — 2·3430 in
No. 3 main journal width	
Standard size	1·626 — 1·624 in
Oversize 0·010 in	1·636 — 1·634 in
Oversize 0·040 in	1·666 — 1·664 in
Bearing fillet radius	0·16 — 0·15 in
Big end bearing clearance	0·002 — 0·004 in
Main bearing clearance	0·002 — 0·004 in
Crank pin length	1·5015 — 1·4995 in
End float of crankshaft	0·002 — 0·010 in
Thrust washer thickness:	
Standard	0·091 — 0·093 in
Oversize 0·005 in	0·096 — 0·098 in
Oversize 0·020 in	0·111 — 0·113 in

Connecting Rod Alignment:

Maximum out of parallel	0·0005 in/in
Maximum twist	0·0005 in/in
Maximum weight variation in set of three rods	0·25 oz

Rocker Shaft:

Diameter	0·748 — 0·749 in
Bush bore reamed in position	0·7500 — 0·7505 in

Camshaft Journal Diameters:

Front	2·3735 — 2·3725 in
No. 2	1·8720 — 1·8707 in
No. 3	1·8422 — 1·8409 in
No. 4	1·7954 — 1·7940 in
No. 5	1·7488 — 1·7475 in
Camshaft end float	0·002 — 0·006 in
Camshaft housing thickness	0·313 — 0·311 in

SUMMARY OF DESIGN CHANGES

Details of change	When introduced
Adjustable stop fitted on governor housing cover (923996) to give positive maximum speed position of cam plate	355101/1278 349101/1244 (October 1968)
Cylinder block core plugs (17192) changed to cup type plugs (623797). Part number of cylinder block (961965) unchanged but as the plug aperture machining has been changed the plugs are not interchangeable	355101/1322 349101/1288 (April 1969)
Compression ratio reduced from $7\frac{1}{2}$: 1 to $6\frac{3}{4}$: 1 by reducing height of pistons, and fitting of engine stop discontinued. Height of 4600 pistons reduced from 3·756 in. to 3·379 in. and height of 3800 pistons reduced from 4·006 in. to 3·750 in. Pistons are interchangeable but must only be fitted in complete sets	4600/900316 3800/650279 (May 1969)
Heat shield, Part No. 926826 (4600) and 926821 (3800), fitted at rear of cylinder block to protect fuel tank from heat of engine	4600/900316 3800/650279 (May 1969)
Fitting of timing case dowels (621830) discontinued. Holes in cover, carrier plate and cylinder block deleted.	355101/1322 349101/1288 (June 1969)
Throttle linkage changed so that both hand and foot throttle operate through governor.	4600/900316 3800/650302 (July 1969)
Right-hand fuel tank support bracket (923580) changed to 928500, which has integral support for bell-crank lever (926186)	3800/650357 (December 1969)
Carburetter jet sizes changed from 95 main and 95 compensating to 87 main and 127 compensating	355101/1426 349101/1397 (January 1970)
Hand throttle lever transferred to right-hand side of steering column so that throttle linkage can be simplified : cross shaft and ancillary parts deleted.	4600/900422 3800/650358 (February 1970)
Main bearings and thrust washers changed from white metal to aluminium tin. The new bearing (928540) fits in both block and cap and is interchangeable with 907324-5 bearings if fitted in pairs. New thrust washers (928542-3) are fully interchangeable with white metal thrust washers (902023-4)	355101/1431 349101/1397 (February 1970)
Bush (621422) fitted in push-rod hole of governor cover. Part No. of cover changed from 923996 to 929424.	355101/1434 349101/1366 (March 1970)

APPROVED LUBRICANTS — OVERSEAS

Application	A.P.I. Classn.	Air Temp.	GRADE Recomm.	GRADE Alternative	AMOCO	B.P.	CASTROL	ESSO	MOBIL	SHELL
Engine and Air Cleaner	DG, MS, DM	Below —7°C (20°F)	Multi-purpose 10W/30	10W Diesel (SAE 10W)	Vitamatic Tractor Oil 10W/30	Tractor Oil Universal	Agricastrol Multi-use 10W/30	Esso Tractorlube Universal 10W/30	Mobiloil Special 10W/30	Rotella M Multigrade 10W/30
	DG, MS, DM	—7°C to 32°C (20°F to 90°F)	Multi-purpose 20W/30 or 20W/40	20/20W Diesel (SAE 20W)	Vitamatic Tractor Oil 20W/30 or 20W/40	Tractor Oil Universal	Agricastrol Multi-use 20W/30 or 20W/40	Esso Tractorlube Universal 20W/30 or 20W/40	Mobiloil Special 20W/40	Rotella M Multigrade 20W/40
	DG, MS, DM	Above 32°C (90°F)	Multi-purpose 20W/30 or 20W/40	30 Diesel (SAE 30)						
Transmission and Hydraulic System, Belt Pulley and Steering Box		Below —7°C (20°F)	Multi-purpose 20W/30 or 20W/40	80G	Vitamatic Tractor Oil 20W/30 or 20W/40	Tractor Oil Universal	Agricastrol Multi-use 20W/30 or 20W/40	Esso Tractorlube Universal 20W/30 or 20W/40	Mobiloil Special 20W/40	Rotella M Multigrade 20W/40
		—7°C to 32°C (20°F to 90°F)								
		Above 32°C (90°F)	Multi-purpose 20W/30 or 20W/40	90G						
Power-Assisted Steering		All temps.	H 10	—	DL10 Hydraulic Oil	Energol HL65	Hyspin 70	Esso Automatic Transmission Fluid	Mobilfluid ATF 200	Tellus 27
Final Drive Reductions, King Pin and Front Trunnion (Pivot)		Below —7°C (20°F)	90G	—	Gearol 90	Gear Oil SAE 90	Castrol ST or Agricastrol Heavy	Esso Gear Oil ST90	Mobilube C90	Dentax 90
		—7°C to 32°C (20°F to 90°F)	140G	—	Gearol 140	Gear Oil SAE 140	Castrol D or Agricastrol Gear Oil Medium	Esso Gear Oil ST 140	Mobilube C140	Dentax 140
		Above 32°C (90°F)								
Details of Alternative Grade Oils			10W Diesel (SAE 10W)		New Ace 10W	Energol Diesel D SAE 10W	Castrol CR10 or Agricastrol HD10	Essolube HD 10W	Mobiloil 10W or Delvac Oil 1110	Rotella S 10W
			20/20W Diesel (SAE 20W)		New Ace 20/20W	Energol Diesel D SAE 20W	Castrol CR20 or Agricastrol HD20	Essolube HD20	Mobiloil Arctic or Delvac Oil 1120	Rotella S 20/20W
			30 Diesel (SAE 30)		New Ace 30	Energol Diesel D SAE 30	Castrol CR30 or Agricastrol HD30	Essolube HD30	Mobiloil A or Delvac Oil 1130	Rotella S 30
			80G		Gearol 80 or New Ace 30	Gear Oil SAE 80	Castrol ST 80 or CR30 or Agricastrol Medium	Essolube 20	Mobilube C80 or Mobiloil A or Delvac Oil 1130	Dentax 80
			90G		Gearol 90	Gear Oil SAE 90	Castrol ST or Agricastrol Heavy	Esso Gear Oil ST 90	Mobilube C90	Dentax 90

ENGINE OIL—Under normal operating conditions the engine oils should be marked with viscosity grade and API classification as shown in the above table. Oils marked with service classification DM are recommended when one or more of the following conditions is present:— abnormally high operating temps., intermittent operation at low temps. or fuel contains more than 1% sulphur.

AIR CLEANER—Where possible a straight mineral oil should be used as an alternative to engine oil to avoid frothing.

Diesel Engine
4 Cylinder

FOUR CYLINDER DIESEL ENGINE

1200 AND 990 SELECTAMATIC TRACTORS

Includes update 9-38195 dated May, 1979.

CASE CORPORATION

Pub 9-37121

Printed in U.S.A.
February, 1980

Introduction

All engines are stamped on the right-hand side of the cylinder block with a type designation and serial number, e.g. 455001/4001 or 449002/1001, etc. The engine designation number is built up according to the following formula, commencing at the left:

First digit — number of cylinders.

Second and third digits — together these give the nominal capacity, in cubic inches, of one cylinder. (The approximate capacity, in cubic inches, of an engine can be obtained by multiplying the first digit by the second and third digits, e.g.: 4×55 = 220 cu. in. and 4×49 = 196 cu.in.)

Fourth digit — type of fuel: 0 for diesel (1 would be gasoline).

Fifth digit — design series: 0 is the first series and 1 is the second, etc. This number is used to identify engines which are in different forms to suit different tractor frames.

Sixth digit — type of clutch: 1 Livedrive, 2 single plate, 5 twin-plate.

The designation is then followed by the engine serial number; these are consecutive and allow individual engines in each type to be identified.

Examples:

4 5 5 0 0 1 / 4 0 0 1 — is a 4-cylinder, 200 cu. in. capacity, diesel, first series, Livedrive model, serial number 4001

- 4 — 4-cylinder
- 55 — 55 cu in.
- 0 — diesel
- 0 — first series
- 1 — Livedrive

4 4 9 0 0 2 / 1 0 0 1 — is a 4-cylinder, 196 cu. in. capacity, diesel, first series, Non-Livedrive model, serial number 1001.

- 4 — 4-cylinder
- 49 — 49 cu in.
- 0 — diesel
- 0 — first series
- 2 — Non-Livedrive

Engine Designations and Tractor Models

Engine Type	*Tractor Model*	*Tractor Number*
455001	**1200 Selectamatic Livedrive**	**700001 onward**
455002	**1200 Selectamatic Non-Livedrive**	
449001	**990 Selectamatic Livedrive**	**800001 onward**
449002	**990 Selectamatic Non-Livedrive**	
449005	**990 Non-Livedrive (Twin-plate clutch)**	

CONTENTS

Section	Description	Page
	MAINTENANCE	1
	REPAIR OPERATIONS (in same order as Schedule of Repair Times TP670)	3
A1	Engine Tune	3
A2	Engine Removal and Replacement	3
B1	Adjusting Valve Clearance	8
B2	Removing and Replacing Cylinder Head	8
B3	Decarbonising Cylinder Head	9
C2	Pistons and Connecting Rods	14
C4	Camshaft	15
D1	Injectors	17
D2	Fuel Feed Pump	20
D3	Fuel Filter	20
D4	Venting Fuel System	21
D8	Fuel Injection Pump	23
D9	Fuel Tank	26
E1	Lubricating Oil Filter	28
E3	Lubricating Oil Pump	28
F3	Air Cleaner	31
G1	Timing Cover	31
G3	Timing Gears	32
H6	Water Pump	35
	DIMENSIONAL DATA	36
	SUMMARY OF DESIGN CHANGES	40

MAINTENANCE

Daily

Engine Oil: Check oil level in engine sump and top up if necessary.

Air Cleaner: Remove filter bowl and examine condition of oil. In dusty conditions the oil should be changed frequently, the detachable wire element removed, washed in diesel fuel, and allowed to stand until all fuel has drained off. (Fig. 1.)

Paper Element Pre-Cleaner: This is an alternative fitting to the centrifugal type pre-cleaner and incorporates a replaceable paper element. Frequency of attention depends on working conditions and in dusty climates the cover should be removed every few hours of use and the element examined. The element can be cleaned by tapping its side to shake off the loose dust. If the element becomes very dirty, or contaminated with oil or water, it should be renewed. *Do not attempt to wash an element.* (Fig. 2.)

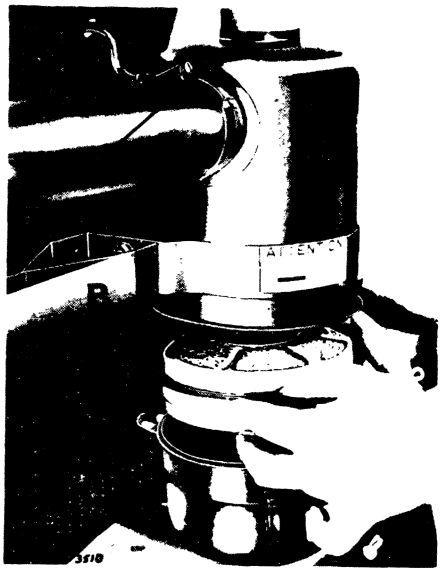

Figure 1. AIR CLEANER

A. Oil bowl B. Wire mesh C. Rubber sealing ring
D. Cleaner inlet pipe E Cleaner body

Every 60 Hours

Engine Oil: Check oil level in engine sump and top up to within "safe" range if required.

Cooling System: Check radiator water level and top up to within 1 in. (2·5 cm) from top of filler neck if required. *If engine is hot, remove radiator cap slowly as system is pressurised and may scald hand if opened quickly.*

Sediment Bowl: Visually examine feed pump sediment bowl. Remove and clean if there is any accumulation of dirt or water. (Fig. 3.)

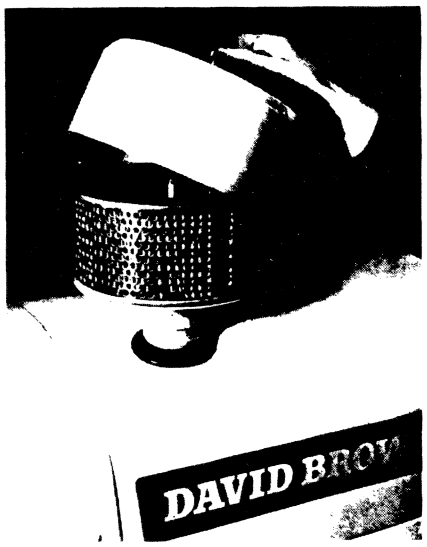

Figure 2. PAPER ELEMENT PRE-CLEANER

Air Cleaner: Remove bowl and detachable wire mesh element. Clean out bowl and refill with new, clean oil.

The depth of dust deposit in cleaner bowl must not be allowed to exceed $\frac{1}{4}$ in. (6·3 mm) when checked after standing overnight, otherwise oil pull-over into induction manifold will take place due to raised oil level. Oil in the induction manifold, which indicates oil pullover, can be checked through ether plug in manifold. Oil pullover will cause rapid engine wear and must be prevented by adequate cleaner maintenance.

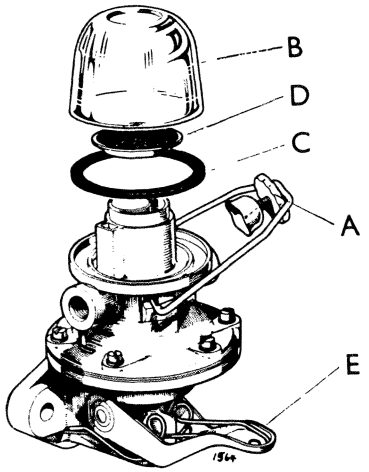

Figure 3. FEED PUMP SEDIMENT BOWL

A. Bowl securing nut B. Sediment bowl
C. Sealing ring D. Filter screen
E. Priming lever

Every 125 Hours

Engine Oil: Drain oil, when engine is warm, through plug on underside of sump. Refill with approved oil to upper mark on dipstick.

Injection Pump (1200 Tractors only): Drain lubricating oil from injection pump, by means of drain plug in pump base, and refill with new engine oil until it commences to run out of level plug. (Fig. 37.)

Every 250 Hours

Oil Filter: Fit new element in engine lubricating oil filter. Do not attempt to wash a filter element. (See page 28.)

Every 500 Hours

Fuel Filter: Fit a new element in the first fuel filter but do not disturb second fuel filter. (See Page 20.)

Do not attempt to clean fuel filter elements and do not change elements from one filter to another.

Sediment Bowl: Remove and flush out feed pump sediment bowl, remove filter screen and clean with air blast. As the feed pump is lower than the fuel tank it is necessary to slacken outlet union on fuel tank, so that fuel will not siphon out when bowl is removed. Replace screen and bowl, ensuring that it seats on sealing ring in pump body then retighten fuel pipe union.

Injectors: Remove injectors for cleaning. Failure to clean injectors will result in the nozzle carbon deposit becoming so hard that it cannot be removed and a new nozzle will be required. (See Page 17.)

Valve Clearances: This should be done whilst injectors are removed and engine is cold. (See Page 8)

Dynamo: Remove small rubber plug from centre of dynamo rear end-plate and inject a few drops of engine oil through hole and replace plug.

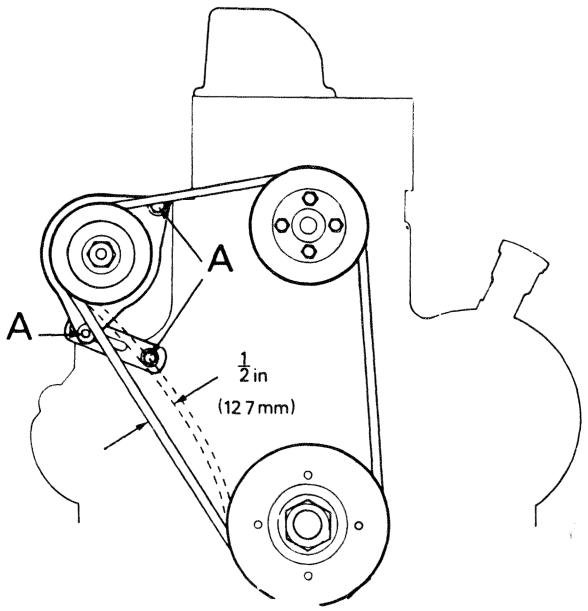

Figure 4. FAN BELT ADJUSTMENT

A. Dynamo mounting bolts

Fan Belt: Check fan belt tension by deflecting belt midway between fan and crankshaft pulleys. Belt should deflect approximately 1 in. (25 mm) and if necessary may be adjusted by releasing the three dynamo mounting bolts and swinging dynamo on two upper mounting bolts. Tighten lower bolt first as this will hold dynamo in position whilst upper bolts are tightened. Do not overtighten the belt. A taut belt will place excessive load on dynamo and water pump bearings and cause rapid belt wear. Renew belt if it has insufficient tension when dynamo lower mounting bolt is at end of adjusting slot. (Fig. 4.)

Every 1000 Hours

Fuel Filter: Using the same procedure as in 500 hours' service, fit new elements in both first and second fuel filters. Do not attempt to clean or interchange filter elements.

REPAIR OPERATIONS

● *OPERATION A1*

Engine Tune

If engine becomes difficult to start, or does not develop full power, carry out the following engine tune:

1. **Compression Test:** Use a test gauge as shown in the Service Tool List. Remove all injectors and, using a correct length of extension, fit gauge into No. 1 injector bore. Tighten down with injector nuts to give an airtight seal, and with the stop control in the "stop" position spin engine with starter motor. It is advisable to use a fully-charged battery as the higher the cranking speed the better. Note the gauge reading then repeat the procedure on the remaining cylinders. If the four readings are approximately the same, proceed with the engine tune. If there is a difference of more than 50 lb/sq. in. (3·5 kg/sq. cm) it will be necessary to remove the cylinder head as the loss of performance is due to weak compression and an engine tune will not be fully effective.
2. **Valve Clearance:** Whilst the injectors are out, remove valve rocker cover and check valve clearance (see Page 8). Adjust if necessary, noting that exhaust valves with a cap on the stem end (Fig. 20) should have 0·007 in. (0·18 mm) clearance, but exhaust valves not fitted with caps (Fig. 20) and all inlet valves should have 0·010 in. (0·25 mm) clearance.
3. **Injectors:** Service the injectors (see Page 17) before replacing. Take care to fit copper sealing washers on injector nozzles and tighten nuts down evenly to avoid distortion.
4. **Air Cleaner:** Clean out oil bath and refill to correct level with new oil. Wash wire mesh element, clean out inside of inlet pipe and pre-cleaner. If a paper element pre-cleaner is fitted clean or renew the element (see Page 31).
5. **Fuel Filters:** Clean out fuel sediment bowl and replace fuel filter elements as necessary (see Page 20). Vent fuel system (see Page 21).
6. Start engine, allow to reach working temperature then check idling and maximum speeds. Re-set if necessary (see Page 22).

● *OPERATION A2*

Engine Removal and Replacement

1200 Tractors and 990 6-speed Tractors

Place tractor on firm and reasonably level ground and within reach of suitable lifting equipment.

Remove silencer and bonnet. Drain cooling system and disconnect battery earth lead.

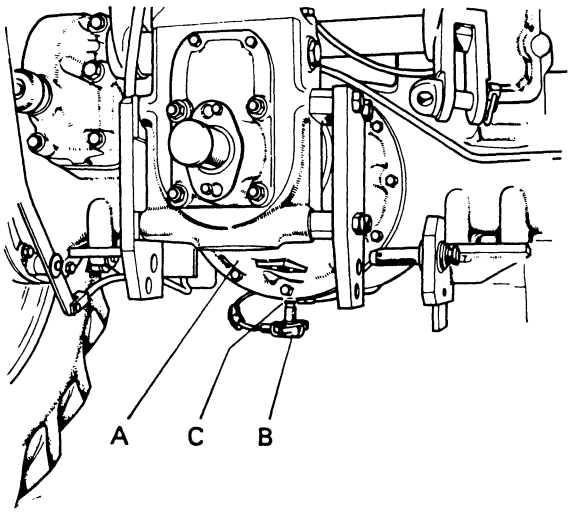

Figure 5. HYDRAULIC FILTER SWITCH — 990 Tractors

A. PTO case B. Adaptor C. 'O' ring—adaptor

Disconnect hoses and remove fan. Remove radiator on 990 Tractors; on 1200 Tractors the radiator and bonnet front need not be removed but the hydraulic pump driveshaft must be disconnected by releasing coupling from crankshaft pulley and removing rubber distance piece.

Disconnect fuel and leak-off pipes from tank; if tank is full it is advisable to drain the fuel to lighten tank. Remove hand throttle lever, disconnect instrument panel wiring and engine speed indicator drive cable. Remove fuel tank mounting bolts and remove tank complete with instrument panel.

Clean gearbox cover, top of rear axle case and adjacent areas to prevent dirt entering main frame when gearbox cover is removed.

Remove steering-box, complete with column and wheel: on 1200 Tractors the box should first be drained of oil. If tractor is fitted with hydrostatic steering, disconnect and drain oil reservoir, then disconnect pipes from servo valve and pump. Remove pump reservoir and servo valve complete with column and mounting bracket. Remove all pipes and *seal all pipe ends and unions* to prevent dirt entering system.

Remove starter and cable from battery to starter. Remove clutch housing — four bolts are positioned inside steering-box cavity — taking care of wedge and shims.

Release seat adjustment and slide seat fully rearwards. Remove gearbox cover bolts and lift off cover.

On Livedrive tractors it is necessary to drain the transmission oil into *clean containers*, remove PTO unit and withdraw cardan shaft clear of clutch. On 990 Tractors the hydraulic filter switch adaptor passes through underside of PTO case and *this adaptor must be removed* before PTO unit is withdrawn. (Fig. 5.)

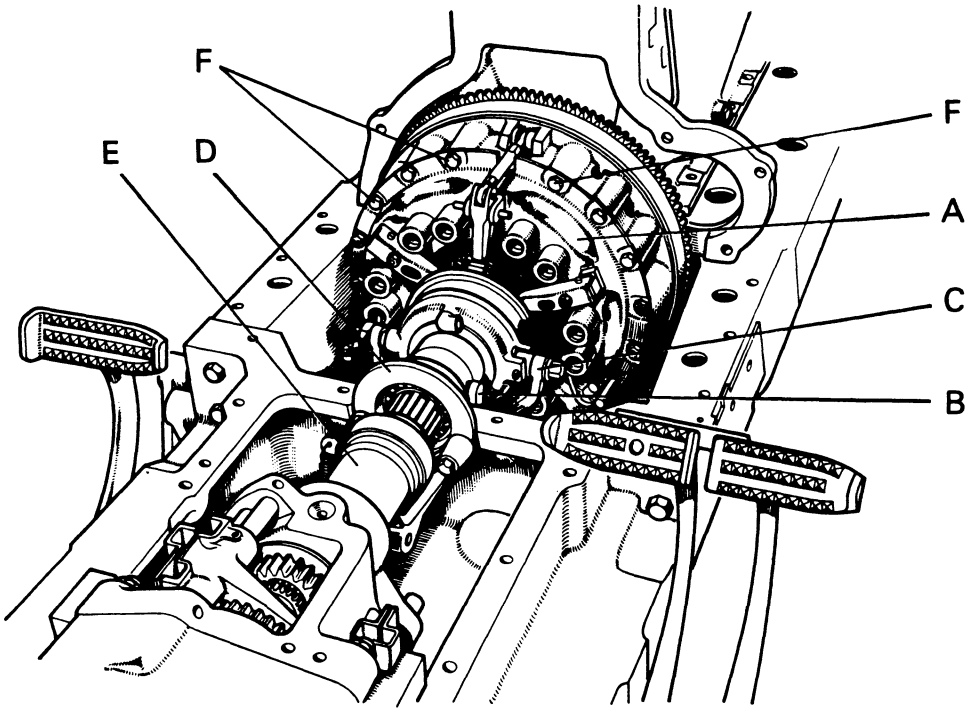

Figure 6. 1200 TRACTOR WITH CLUTCH HOUSING AND GEARBOX COVER REMOVED

A. Clutch assembly
B. Transmission release fork
C. PTO release fork
D. Support snout
E. Muff coupling
F. Bolts—clutch to flywheel

Disconnect clutch stop brake band, by removing pins from each end of band. Remove bolts attaching stop assembly to main frame and allow assembly to rest in bottom of frame

Early 1200 Tractors have a plunger in each end of muff coupling and these should be removed by sliding spring clip to one side and then extracting plungers.

Release clutch driveshaft circlip from groove and slide muff coupling forward clear of gearbox shaft. On 990 Tractors the clutch-stop drum must be slid fully forward on shaft, to allow sufficient movement of muff coupling. On 1200 6-speed tractors slide muff coupling rearwards clear of clutch shaft.

On 1200 Tractors disconnect PTO release bearing housing from its fork by removing pivot bolt from left-hand side and split pin from right-hand side (Fig. 6). Disconnect bearing lubrication pipe if fitted.

On 990 Tractors remove the two figure-of-eight spring clips attaching clutch release bearing to its fork.

Remove bolts attaching cylinder block to main frame and fit lifting bracket (Fig. 7) on cylinder-head lifting nuts then lift engine unit, complete with clutch driveshaft and support snout, vertically out of frame. Guide muff coupling clear of gearbox as engine is raised and take care not to damage oil pump when lowering engine on to stand on bench. (Fig. 8.)

Refit engine in reverse order of removal, using new gaskets and seals, etc. Clean main frame and cylinder block faces, removing all traces of old gasket. Smear main frame and both sides of gasket with jointing compound before placing them in position. Fit new bearing-cap seals, pushing ends of seals into holes in block so that seals fit closely in bearing-cap grooves.

Two $\frac{3}{8}$ UNC studs temporarily screwed into main frame at opposite points will assist in locating engine and allow it to be lowered into position without disturbing the gaskets.

Fit clutch driveshaft, complete with release bearing, support snout, circlips, clutch-stop drum and muff coupling, into clutch assembly.

On 1200 Tractors the transmission release fork engages with slots in bearing sleeve and *care must be taken to position sleeve so that slots fit over fork when engine is lowered into position*. (Fig. 9.)

After lowering engine into position check that cylinder block is correctly seated on main frame, with both locating dowels engaged, and support snout is in line with frame holes. Connect the clutch release bearings to their forks and check that they operate quite freely.

Ensure that gearbox and clutch shafts are in line by checking that muff coupling can be freely engaged on shaft splines in all positions through full 360°.

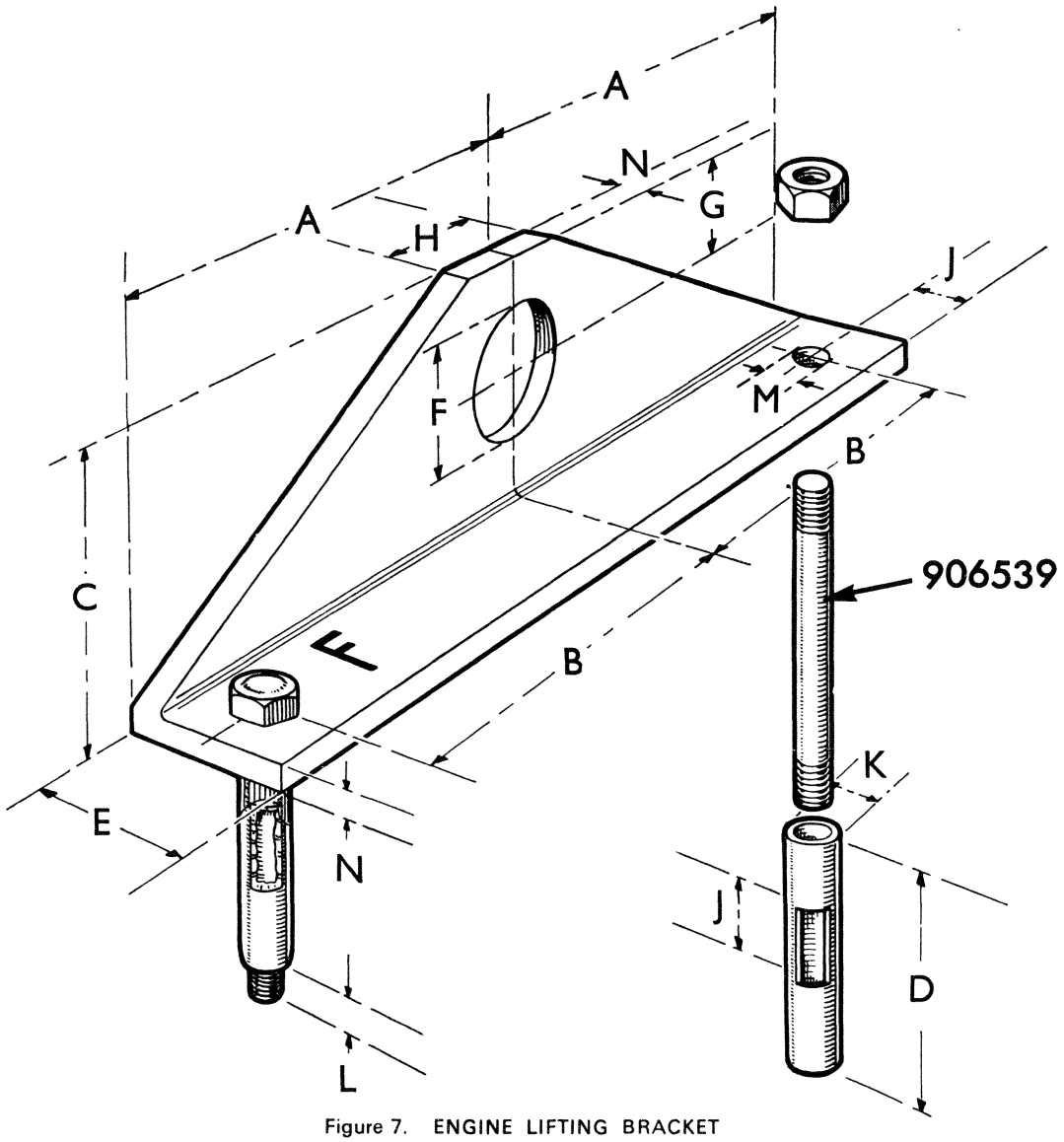

Figure 7. ENGINE LIFTING BRACKET

Nut and distance piece to be welded to stud allowing $\frac{1}{16}$ (1·6 mm) clearance between nut and angle bracket.

A. 6 in. (15·24 cm)	B. $5\frac{1}{16}$ in. (12·86 cm)	C. 4 in. (10·16 cm)	D. $3\frac{11}{16}$ (9·366 cm)
E. $2\frac{1}{2}$ in. (6·350 cm)	F. 2 in. 5·080 cm)	G. $1\frac{3}{4}$ in. (4·445 cm)	H. $1\frac{1}{2}$ in. (3·810 cm)
J. 1 in. (2·54 cm)	K. $\frac{7}{8}$ in. (2·222 cm)	L. $\frac{5}{8}$ in. (1·587 cm)	M. $\frac{9}{16}$ in. (1·428 cm)
	N. $\frac{3}{8}$ in. (0·952 cm)		

Slide muff coupling on to gearbox shaft and, after locating with circlip, check that coupling has not less than 0·008 in. (0·20 mm) end-float. To increase end-float slide coupling forward and remove shims from gearbox shaft.

The spring plungers fitted on early 1200 Tractors must be fitted so that plunger chamfer is on non-driving side and is against the shaft spline which has a chamfered corner. On these tractors, therefore, the coupling must not be fitted in any position but must be positioned so that chamfered spline on shafts are in line with plunger holes in coupling and plungers fitted opposite way round: front plunger with chamfer on leading side and rear plunger with chamfer on trailing side.

Before refitting gearbox cover, assemble and set clutch-stop as described in Clutch Section of Repair Manual. Replace gearbox cover, check that gear levers are correctly engaged in their selectors, then lightly tighten main bolts. Replace and fully tighten bolts through rear axle case then finally fully tighten cover-to-main-frame bolts.

Push PTO cardan shaft into clutch until it passes through clutch plate and enters flywheel spigot bearing. If cardan shaft cannot be pushed "fully home" release PTO clutch and turn shaft whilst pushing it into place.

Refit PTO unit. Fit new element in hydraulic filter, or clean screen if early type, replace transmission oil

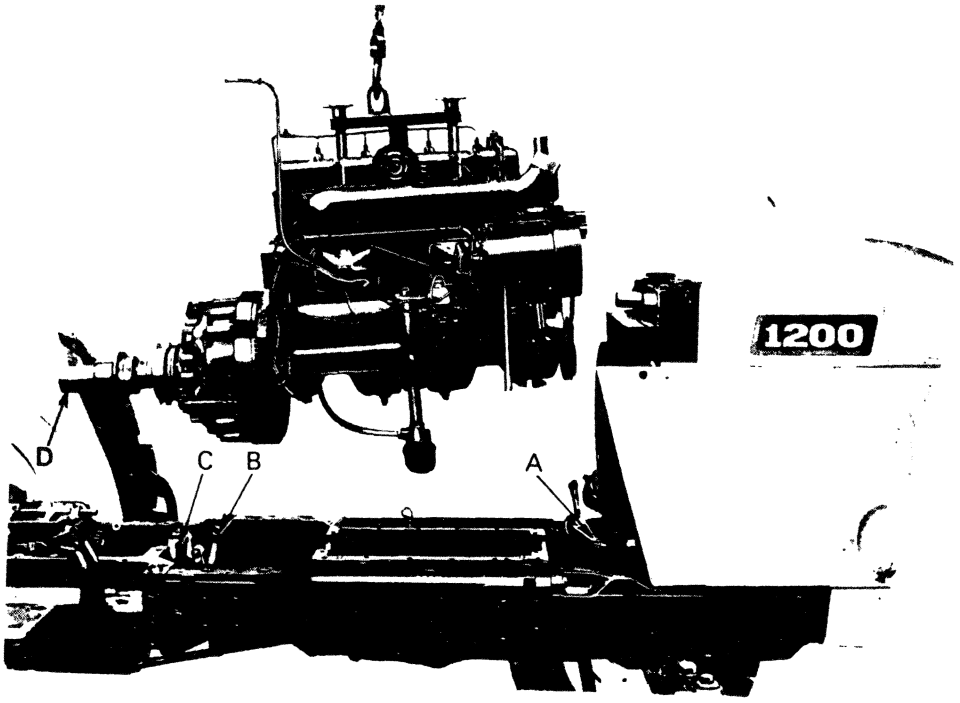

Figure 8. REMOVING ENGINE UNIT

A. Hydraulic pump driveshaft
B. PTO clutch fork
C. Transmission clutch fork
D. Muff coupling

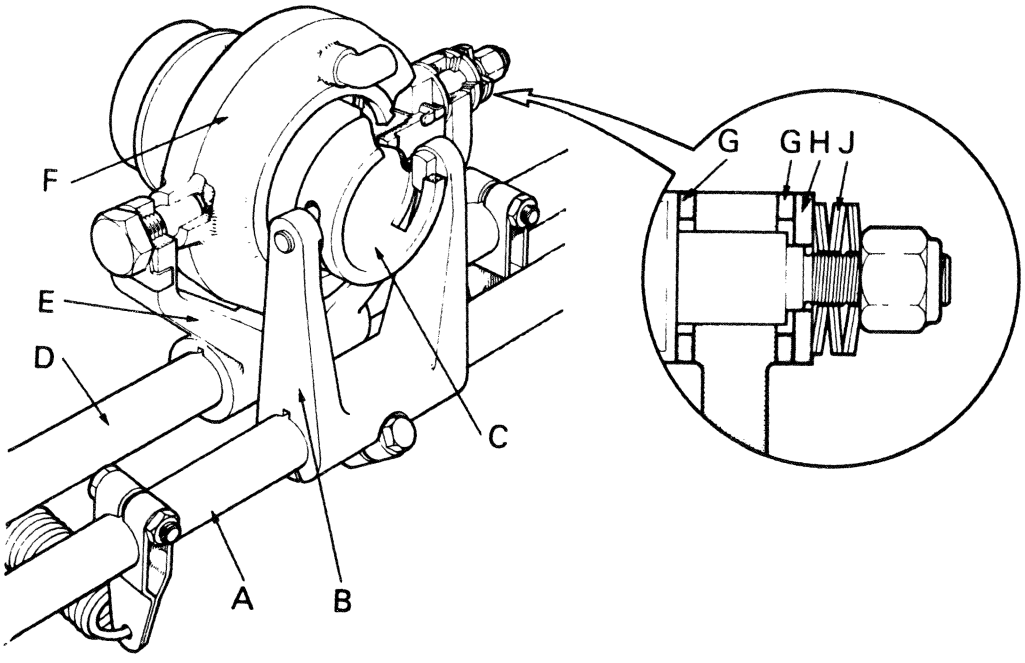

Figure 9. CLUTCH RELEASE MECHANISM — 1200 TRACTORS

Transmission clutch:
A. Cross shaft
B. Fork
C. Sleeve

PTO clutch:
D. Cross shaft
E. Fork
F. Bearing carrier

G. Friction washer
H. Special washer
J. Belleville washers

except for last gallon, which will have accumulated most of the sediment, and top up with new oil.

When re-assembly is complete, carry out a full engine tune. (See Page 3.)

990 12-Speed Tractors

As these tractors do not have a muff coupling — the clutch driveshaft fits directly into the gearbox — the engine cannot be lifted from main frame with the clutch in position. To remove the engine it is therefore necessary to first "split" the tractor, to disengage clutch from driveshaft, then lift engine from front half of frame.

With the tractor standing on firm, level ground and positioned within reach of lifting equipment, remove bonnet and disconnect battery.

Remove hand throttle lever, disconnect engine controls. Disconnect engine speed indicator cable and instrument panel wiring. Disconnect leak-off and fuel pipes from tank, then remove fuel tank, complete with instrument panel. Place a jack under front end of main frame to support rear half of tractor when front half is withdrawn. Place a wooden block between jack and main frame and extend jack so that it takes weight but does not lift tractor. Drive two suitable wooden wedges between each side of front extension and axle beam, to ensure that front half of tractor will remain upright when separated. Drive wedges firmly into position to prevent any possibility of them becoming dislodged.

Place a trolley-jack under flywheel housing so that front half of frame can be eventually drawn forward.

Remove drop-arm from steering-box shaft and remove starter motor.

If tractor is fitted with hydrostatic steering disconnect and remove pipes from servo valve. Seal all pipe ends and unions to prevent dirt entering system.

Adjust height of trolley-jack so that it takes weight but does not lift tractor, then remove bolts attaching clutch housing and rear main frame to front half of tractor. Adjust so that they support tractor level, with main frame faces parallel, then draw front half of tractor forward until it is clear. Drain cooling system, remove radiator hoses and fan. Attach lifting bracket (Fig. 10) to lifting nuts on cylinder head, remove bolts holding engine to main frame then lift engine unit, complete with flywheel and clutch. Take care not to damage oil pump when lowering engine on to stand or bench.

Replace engine in reverse order of removal, using new gaskets, etc. Clean main frame and cylinder block faces, removing all traces of old gasket. Smear main frame and both sides of gaskets with jointing compound then place gaskets in position on frame. Fit new bearing cap seals, pushing ends of seals into holes in block so that seals fit into bearing cap grooves.

Lower engine carefully on to main frame; two $\frac{3}{8}$ UNC studs screwed into main frame at opposite points will assist in locating engine and allow it to be lowered into position without disturbing the seals.

Before pushing halves of tractor together check clutch release bearing and PTO cardan shaft. Push and turn shaft to ensure that it is engaged on PTO

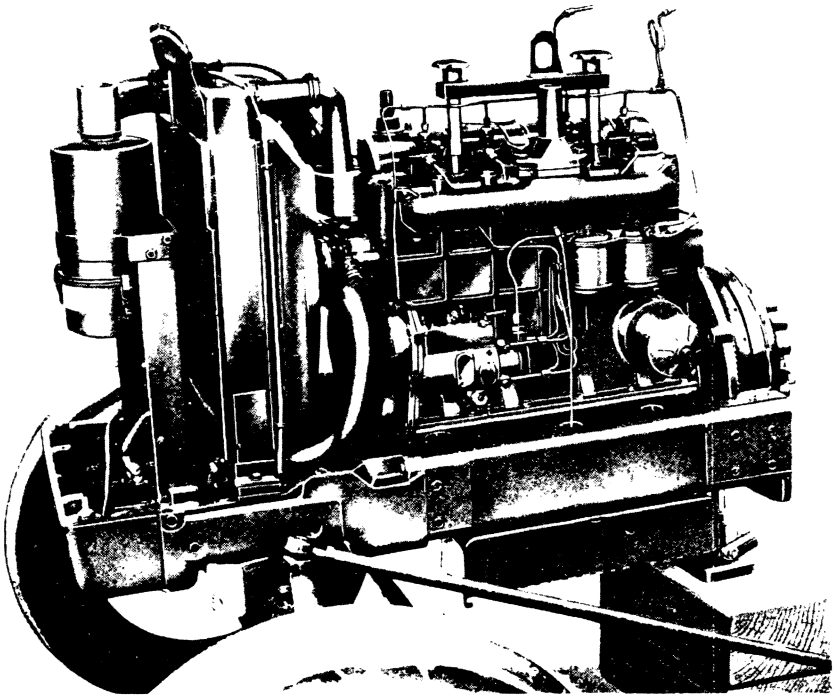

Figure 10 990 TRACTOR 'SPLIT' FOR ENGINE REMOVAL

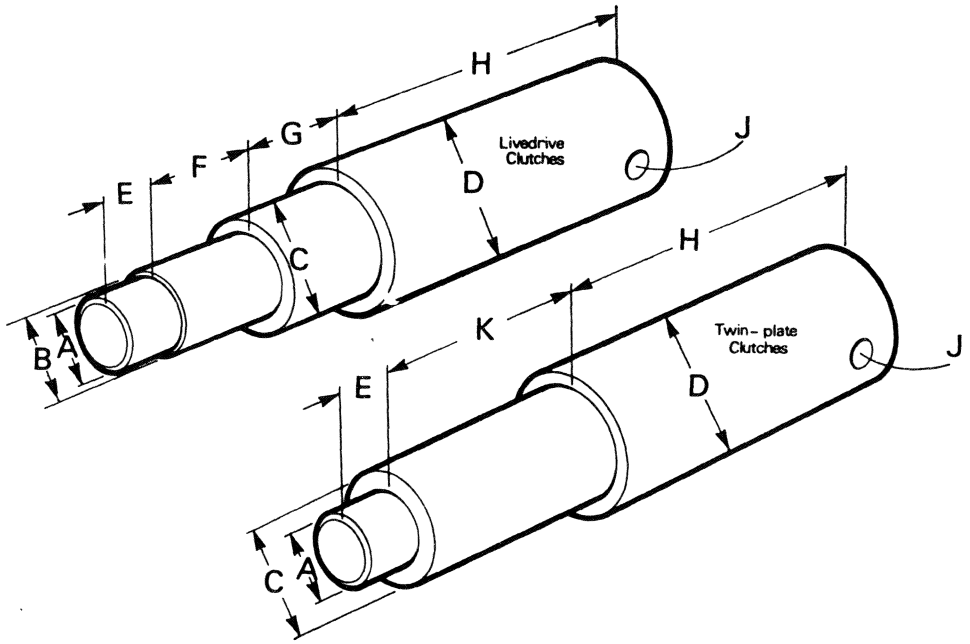

Figure 11. CLUTCH PLATE PILOT — 990 TRACTORS

A. 0·874 in. (22·20 mm) B. 0·915 in. (23·24 mm) C. 1·420 in. (36·07 mm) D. 1·771 in. (44·98 mm)
E. $\frac{5}{8}$ in. (15·88 mm) F. $1\frac{1}{2}$ in. (38·10 mm) G. $1\frac{3}{4}$ in. (44·45 mm) H. 5 in. (127 mm)
J. $\frac{3}{8}$ in. (9·5 mm) dia. K. $3\frac{1}{4}$ in. (82·55 mm)

shaft splines. If clutch has been disturbed — and it is advisable to service clutch unit whilst it is accessible — ensure that clutch plates have been centralised by using a clutch pilot (Fig. 11) when clutch assembly is fitted to flywheel.

Bring two halves of tractor together, adjusting height of jacks to bring gap between frames parallel — two $\frac{7}{16}$ UNC studs screwed into frame at opposite points will assist in centralising the two halves. When driveshafts enter clutch, engage low gear and turn engine until transmission plate splines engage on driveshaft. At the same time, engage PTO high ratio and turn PTO shaft until cardan shaft splines enter clutch plate. When frames are together and dowels entered, fit bolts and tighten evenly to avoid distorting frame flanges.

When re-assembly is completed, and cooling system refilled with water, tune engine as described on Page 3.

● *OPERATION B1*

Valve Clearance Adjustment: As the valve clearance must only be checked when the valve is at the back of cam — this position is reached when the opposite valve is full open — remove valve rocker cover and adjust valves in the following order:

Adjust No. 1 valve when No. 8 valve is full open.
Adjust No. 6 valve when No. 3 valve is full open.
Adjust No. 4 valve when No. 5 valve is full open.
Adjust No. 2 valve when No. 7 valve is full open.
Adjust No. 8 valve when No. 1 valve is full open.
Adjust No. 3 valve when No. 6 valve is full open.
Adjust No. 5 valve when No. 4 valve is full open.
Adjust No. 7 valve when No. 2 valve is full open.

Check clearance between tip of rocker arm and end of valve stem and if incorrect adjust by means of adjusting screw on rocker arm. Firmly tighten locknut after resetting screw then recheck clearance. (Fig. 12.)

All inlet valves, and also exhaust valves not fitted with a stem end cap (Fig. 20) should have 0·010 in. (0·25 mm) clearance, but exhaust valves with a cap on the stem end (Fig. 20) should have 0·007 in. (0·18 mm) clearance.

Check tightness of all adjusting-screw locknuts before replacing rocker cover.

● *OPERATION B2*

Cylinder Head Removal: Drain cooling water from radiator and cylinder block. Remove air inlet pipe and both manifolds. Remove top water hose and valve rocker cover. Disconnect oil feed pipe to cylinder head, remove rocker shaft and push rods.

Remove cylinder head nuts and bolts in the reverse order of tightening (Fig. 13). Remove gasket, clean block face and oil cylinder bores before covering with a cloth for protection.

Refitting Cylinder Head: Refit the head in the reverse order of removal, paying attention to the following:

1. Check thermostat and renew if necessary (see Page 34) Fit a new sealing ring on water pump by-pass connection.

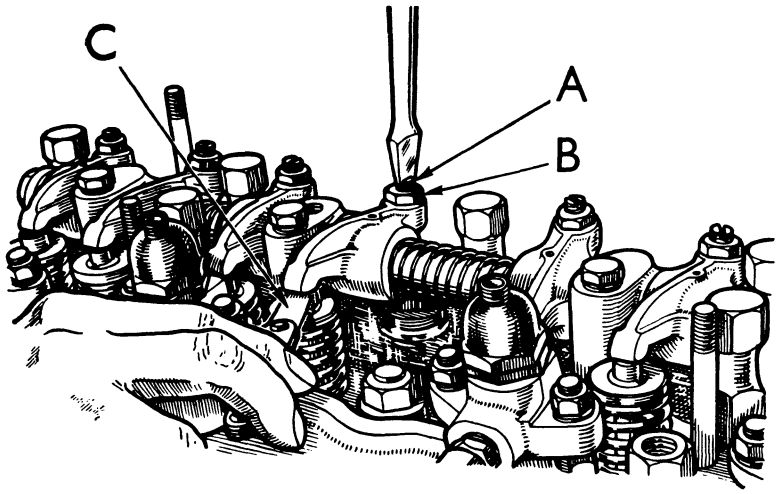

Figure 12.

SETTING THE VALVE CLEARANCES

A. Adjuster screw
B. Locknut
C. Feeler gauge

2. Clean and lightly oil the cylinder bores.
3. Coat both sides of head gasket with Wellseal, or a good brand of thin non-hardening jointing compound. The use of an unsatisfactory jointing compound may allow water seepage.
4. Ensure that head and block faces are clean and the gasket is fitted with the word "Top" towards the cylinder head.
5. Tighten head bolts and nuts in the order shown in Fig 13 and in three stages of 30, 60 and 90 lb ft (4, 8 and 12·5 kg metres).
6. Renew any bent push rods and if exhaust valves have stem end caps do not forget to replace these. Firmly tighten the rocker shaft pedestal bolts.
7. Carry out a full engine tune (valve clearances, air cleaner, etc.) as described on Page 3.
8. After the engine has run for approximately 1½ hours check rocker shaft bolts, tighten head bolts to 90 lb ft (12·5 kg metres) then check valve clearances.

CAUTION: Never run an engine without cooling water as this may cause cylinder glazing and subsequent high oil consumption.

● *OPERATION B3*

Decarbonising the Engine: When compression is low, or engine is down in power due to an accumulation of carbon inside combustion chamber, the cylinder head should be removed, cleaned of carbon and the valves re-seated

Remove injectors for servicing. Mark valves lightly for identification and, using a suitable compressor, remove valve cotters, cups and springs. Remove inlet valve seals, clean carbon from cylinder head and inspect head face, valve seats and guides.

● *OPERATION B3a*

Valves: Remove all carbon and examine the valve heads and stems. Discard valves if cotter location or valve stem is worn. If seat is pitted valves may be refaced at 45° provided that sufficient metal remains to avoid a sharp edge on valve head.

Valve Changes: The current valve, Part No. 928622, is now fitted to both inlet and exhaust on 4/55 and 4/49 engines. This valve may be used to

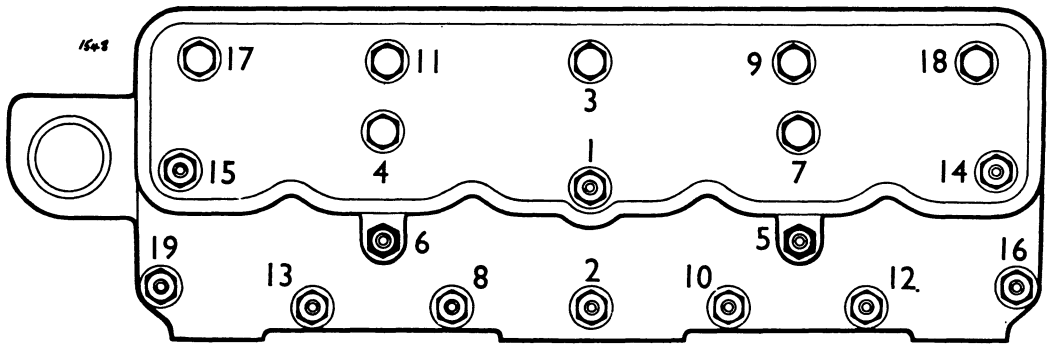

Figure 13. CYLINDER HEAD TIGHTENING SEQUENCE

Tighten bolts and nuts in order shown and in three stages of 30, 60 and finally 90 lb. ft. (4, 8 and 12·5 kg metres)

Figure 14.

INLET VALVES AND SEAT INSERTS

A. $3\frac{13}{32}$ in. (88·52 mm)
B. $3\frac{3}{4}$ in. (95·25 mm)
C. $3\frac{13}{16}$ in. (96·84 mm)
D. 4·890 in. (124·21 mm)
E. 4·860 in. (123·44 mm)
F. 4·840 in. (122·94 mm)
G. 1·505 in. (38·23 mm)
H. 1·475 in. (37·46 mm)
J. 1·380 in. (35·05 mm)
K. $1\frac{3}{8}$ in. (34·92 mm)
L. $1\frac{9}{32}$ in. (32·54 mm)
M. 1·631 in. (41·43 mm)
N. 1·568 in. (39·83 mm)

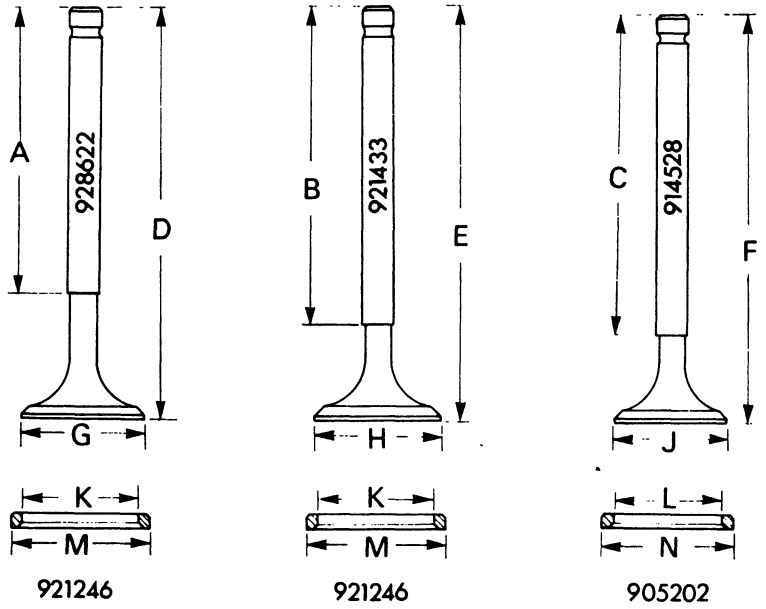

replace inlet valve 921433, previously used on all 4/49 engines from commencement of production, and 4/55 engines fitted with high-lift camshaft and larger diameter valves, but cannot be used to replace 914528 inlet valves, which were used on 4/55 engines up to No. 4912. (Fig. 14.)

The 928622 valve may be used to replace exhaust valves 921434, which were fitted on all 4/49 engines from commencement of production, and 4/55 engines fitted with high-lift camshaft and larger diameter valves, provided that the original stem end caps, cotters and cup are discarded and the latest type cotters and cups are fitted. The 928622 valve should not be used to replace 900417 exhaust valves, which were fitted to 4/55 engines up to No. 4912. (Fig. 15).

When fitting 928622 valves ensure that the width of seat in the head insert is not less than 0·045 in. (1·14 mm) wide, to ensure that the valve does not seat at the edge of the valve head.

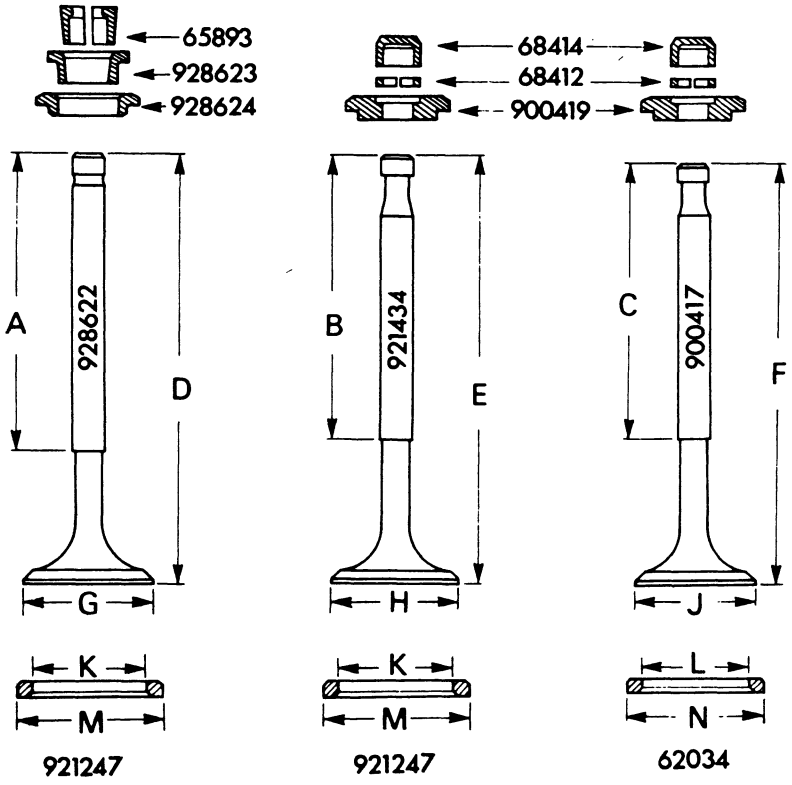

Figure 15.

EXHAUST VALVES AND SEAT INSERTS

A. $3\frac{13}{32}$ in. (88·52 mm)
B. $3\frac{1}{4}$ in. (82 55 mm)
C. $3\frac{5}{32}$ in. (80·17 mm)
D. 4·890 in. (124 21mm)
E. 4·835 in. (122·81 mm)
F. 4·798 in. (121 87 mm)
G. 1·505 in. (38·23 mm)
H. 1·456 in. (36·98 mm)
J. 1·362 in. (34·59 mm)
K. $1\frac{5}{16}$ in. (33·34 mm)
L. $1\frac{7}{32}$ in. (30·96 mm)
M. 1·631 in. (41·43 mm)
N. 1·568 in (39·83 mm)

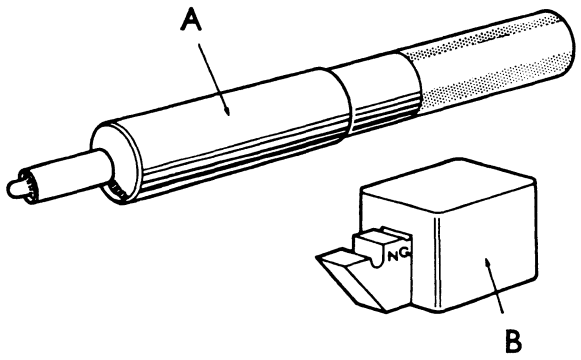

Figure 16. CYLINDER HEAD FACE GAUGES

A. Depth gauge (960938) B. Slip gauge (960940)

● *OPERATION B3b*

Valve Seat Inserts: Examine the seats for pitting, cracking, looseness and excessive seat width. If the seats are in good condition, grinding in the valves will be all that is required, but if the seats are pitted they may be recut to 45° after using a glaze breaker. Seat width should not be more than 0·065 in. (1·7 mm) and may be reduced slightly using 15° and 75° cutters.

Cracked or loose inserts should be renewed. Do not attempt to secure a loose insert by centre-punching the cylinder head face.

Removing a Seat Insert: Very carefully drill the insert at two opposite points, without damaging the cylinder head, then split the insert so that it can be removed without enlarging the head counterbore.

Fitting a Seat Insert: New standard inserts may be fitted if the diameter of the head recess is not greater than the initial machining dimensions shown on Page 37, otherwise a special insert will have to be made to maintain the original interference fit.

The cylinder head must be very clean and heated in water to near boiling point: a steam jenny is ideal for this purpose. Cool the insert in dry ice (solid carbon dioxide) then place it on a suitable mandrel, or guide, and quickly tap it into the head recess: chamfer on outside of insert towards cylinder head.

After fitting the insert, lightly cut at 45° until the seat is 0·045–0·055 in. (1·14–1·40 mm) wide and within 0·0015 in. (0·04 mm) of being concentric with valve stem bore.

● *OPERATION B3c*

Valve Guide Bores: The valve stems operate directly in the cylinder head (no separate guides) and if, after cleaning, the bores are found to be larger than 0·381 in. (9·68 mm) — or 0·006 in. (1·52 mm) clearance with a new valve — the bores should be reamed oversize and appropriate oversize valves fitted. Use the reamer, Part No. 960989 (0·010 in. oversize), or 961824 (0·020 in. oversize), in a vertical pillar drill, running at its slowest speed; apply a liberal quantity of cutting fluid and take special care not to damage the sharp edge at top of exhaust bores.

Cylinder Head Face: This should be free from distortion or damage, otherwise the gasket will be unable to provide an effective seal. Check the face with a straight-edge and feeler gauge and reface if distorted more than 0·003 in. in any 6 in. (0·075 mm in any 150 mm).

As the maximum amount of metal that should be removed from the head face is 0·030 in. (0·76 mm) use Service Tools 960938 and 960940 (Fig. 16) to check how much metal can be removed. Insert depth gauge into injector bore, ensuring that both bore and gauge are clean, then check protrusion of depth gauge above head face with slip gauge. If face G of slip gauge beak fouls end of depth gauge the cylinder head face has been previously ground to the limit and no further grinding is permissible. If beak face G passes over the end of depth gauge the head face can be ground and the thickness of the feeler gauge which can be fitted between tip of depth gauge and face G is the maximum amount of metal that should be removed. (Fig. 17.)

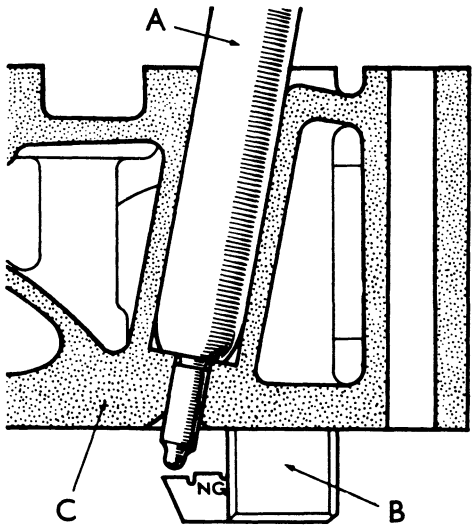

Figure 17. CHECKING CYLINDER HEAD BEFORE REFACING

A. Depth gauge B. Slip gauge C. Cylinder head

If the head face is reground, care must be taken to obtain a smooth finish: use a fine stone with a slow feed.

Valve Grinding: If rectification of valves and seats has been carefully carried out only light regrinding will be necessary to obtain a good air-tight seat.

Distorted valves, eccentric seats, irregular seats, excessive seat width, excessive refacing of valves and excessive valve stem clearance will all cause compression loss and result in shortened valve life.

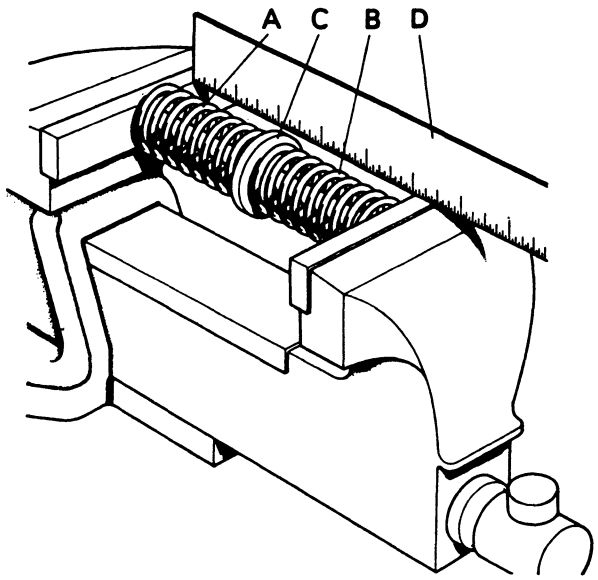

Figure 18. CHECKING VALVE SPRINGS

A. New spring
B. Old spring
C. Spacer
D. Rule

When all valves have been ground-in, wash the head and valves in kerosene until all traces of grinding compound has been removed, then dry with an air-line.

Valve Springs: If suitable equipment is available, check spring lengths when under load. If equipment is not available check springs by comparing their tension with the tension of new springs. (Fig. 18.)

1. Select an average length spring from a set of *new* springs to use as a guide.
2. First compare free-length of new spring against old springs and discard any springs whose free-length is over $\frac{1}{16}$ in. (1·5 mm) shorter than the new spring.
3. Finally compare loaded length of springs by compressing the new spring and each old spring in turn, in series between vice jaws. For safety fit a short piece of bar, slightly smaller than inner diameter of springs, inside the springs and fit a short spacer between the spring ends. Compress springs between vice jaws until new spring is reduced to its loaded length (see data page) then measure length of old spring. If old spring is within $\frac{1}{16}$ in. (1·5 mm) of length of new spring it is satisfactory and can be refitted but any spring whose compressed length is more than $\frac{1}{16}$ in. (1·5 mm) shorter than new spring is weak and must be discarded.

Replace any weak, broken or corroded springs. If the engine has been run for a large number of hours it is advisable to replace the complete set of springs.

Valve Rockers: Remove rocker shaft assembly and place on bench. Unscrew brass plugs from ends of shaft and remove springs, rockers and shaft brackets, placing them in order on bench.

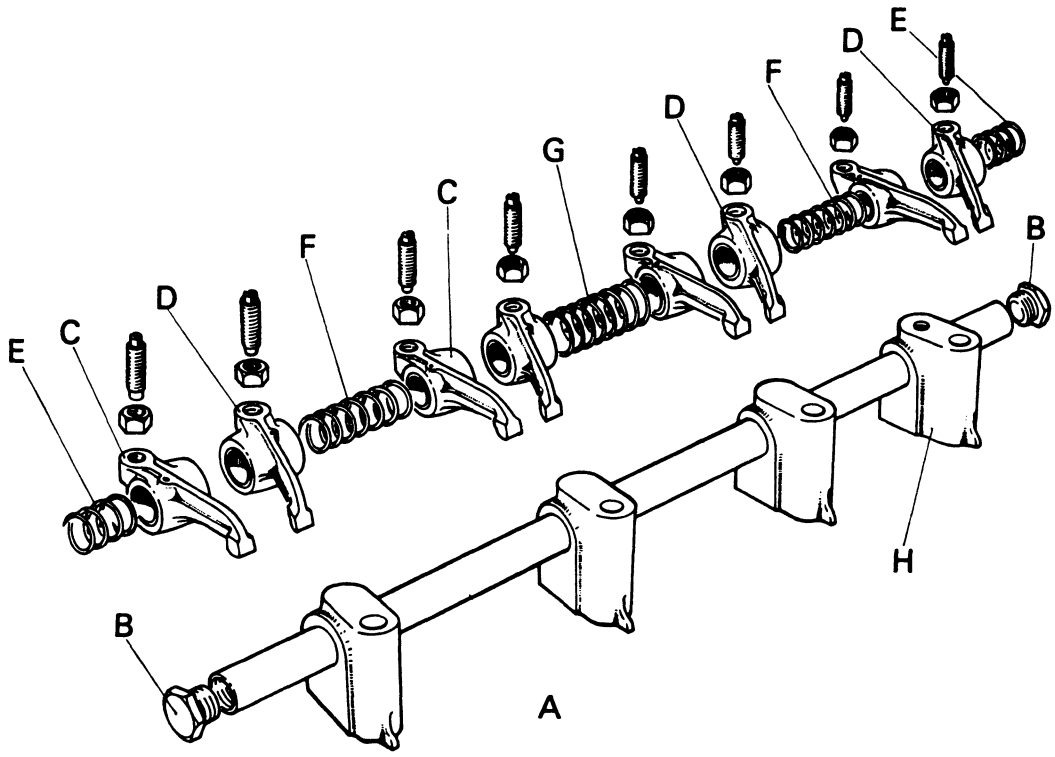

Figure 19. ROCKER SHAFT ASSEMBLY

A. Rocker shaft
B. End plug
C. Rocker, left-hand
D. Rocker, right-hand
E. End spring
F. Intermediate spring
G. Centre spring
H. Rear bracket

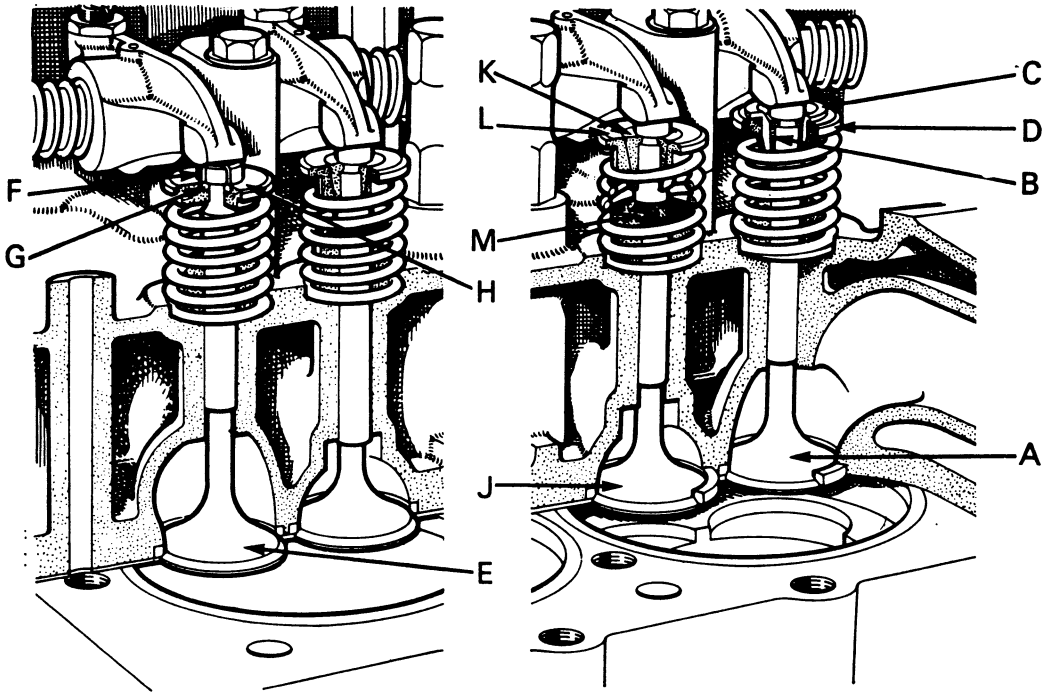

Figure 20. CYLINDER HEAD AND VALVES

A. Exhaust valve	Late type valve	E. Exhaust valve	Early type valve	J. Inlet valve	
B. Cotters		F. Cap—stem		K. Cotters	
C. Collar		G. Cotters		L. Cup	
D. Cup		H. Cup		M. Seal	

● *OPERATION B3d*

Renew any rockers that are excessively worn on the tip. If rocker bushes are worn, these can be renewed. Press out worn bush and press new bush into position, ensuring that oil-holes are aligned. Hone or ream bush after fitting until rocker is free to slide on shaft.

Clean out the rocker shaft, ensuring that all the oilways are clear. Check that rocker bracket faces are completely flat where they seat on the cylinder head. Renew any brackets that are distorted or worn.

Assemble rockers, springs and brackets on shaft in same order as removed. Fit locating screw into rear bracket — oil-holes in shaft are towards bottom of brackets — then lock screw by peening bracket over screw-hole. (Fig. 19.)

Inlet Valve Seals: Having thoroughly cleaned the head and valves, fit new inlet valve stem seals. Ensure there are no burrs in the head chamfer and use Service Tool 961236, or a hollow drift. *Do not use a drift that touches the sharp edge of the seal.* Place seal on tool, smear seal with grease and place in recess, then drive seal home with two or three sharp taps with a copper hammer. Do not use undue force.

Do not fit seals until cylinder head is ready for assembling and do not withdraw a valve once it has been fitted through a seal. Pulling a valve stem through a seal causes the cotter groove to trap and damage the sharp edge of the seal and it is therefore necessary to fit a new seal once a valve is removed.

Assembling Cylinder Head: Smear valve stems with clean oil and fit into their correct positions in cylinder head. Replace springs, collars and cotters, using a suitable tool to compress the valve springs.

Exhaust Valve Caps: If the exhaust valves are fitted with caps, check the stem-end clearance with a Plastigauge. The clearance should be 0·002 to 0·006 in. (0·05 to 0·15 mm) and can be reduced by grinding the cap, provided the cap edge remains square and the sharp corner is removed. (Fig. 20.)

Manifolds: Clean both manifolds, ensuring that the drain-hole and pipe in the exhaust manifold are clear.

Cylinder Block: If the bores are scored, or worn more than 0·010 in. (0·25 mm), they should be rebored to 0·020 in. or 0·040 in. oversize. To maintain balance, always rebore all four cylinders to the same oversize diameter.

Sealing Rings: The sealing rings at the top of the bores have 0·003 in. (0·08 mm) protrusion above the block and it is necessary to remove the rings to rebore the cylinders. New rings, with the appropriate oversize bore, should be fitted after reboring. Ensure the block recesses are clean, smear the rings with

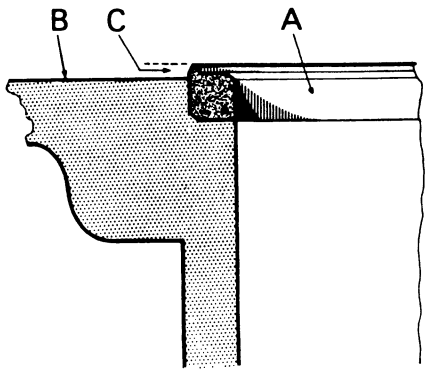

Figure 21. CYLINDER BLOCK SEALING RINGS

A. Sealing ring B. Cylinder block face C. Protrusion

Wellseal, or similar non-hardening jointing compound, then push into place, taking care not to damage the ridge on the ring top edge. Wipe off all surplus jointing compound. (Fig. 21.)

● *OPERATION C2*

Pistons and Connecting Rods

Piston Removal: The pistons cannot be removed through the sump when crankshaft is in position but can be withdrawn upwards after removing cylinder head. Mark pistons before removal and remove all connecting rod bolts, otherwise bolt heads may score the bore. Connecting rod bolts are $\frac{7}{16}$ BSF thread and the nuts are $\frac{23}{32}$ in. across flats.

Pistons: The pistons fitted in 4/55 and 4/49 engines are the same diameter and use the same rings, but are not interchangeable due to their different heights: 4/55 pistons may be identified by the two scallops at the bottom of the skirt.

Pistons on engines with a high-lift camshaft have slightly deeper valve recesses and pistons with shallower recesses must not be fitted to engines having a high-lift camshaft as the valve heads may foul the piston. High-lift camshafts are fitted to all 4/49 engines, and 4/55 engines from No. 4913, and when fitting new pistons to these engines ensure that only pistons with the larger, 1·58 in. (40·1 mm) diameter, valve recesses are used. (Fig. 22.)

When refitting pistons in cylinder block, space the ring gaps so that they are as far apart as possible and ensure that the piston is fitted with the *valve recesses towards the camshaft side of cylinder block.*

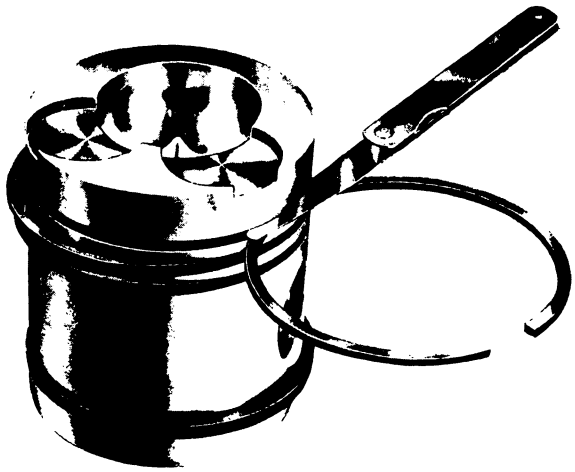

Figure 23. CHECKING PISTON RING GAP

● *OPERATION C2b*

Piston Rings: There are three compression rings and a scraper ring on each piston. The top compression ring is chromed and the second and third rings have an internal step and must be fitted with the word "Bottom" stamped on the ring towards the piston skirt.

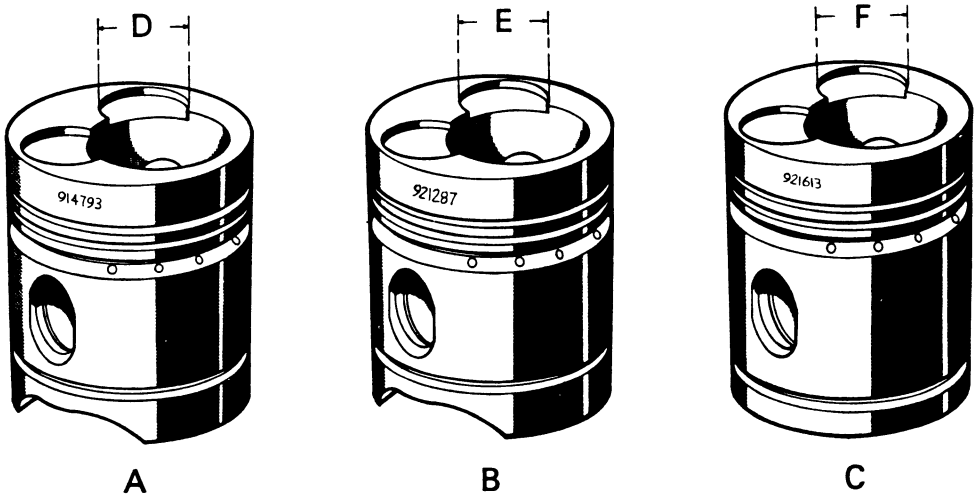

Figure 22. IDENTIFICATION OF PISTONS

A. Early 1200 piston
B. Later 1200 piston
C. 990 Piston
D. 1·50 in. (38·1 mm) dia.
E. 1·58 in. (40·1 mm) dia
F. 1·58 in. (40·1 mm) dia.

After removing carbon from the top, unworn part of the cylinder bore, place the rings in position and check the ring gaps (Fig. 23). New rings will be required if the gaps exceed 0·060 in. (1·52 mm). Excessive top ring wear may be attributed to the ingress of dusty air, due to lack of air cleaner maintenance, and excessive lower ring wear may be caused by dirty oil, due to infrequent oil and filter changes.

If the cylinder bores are worn, but not sufficiently for reboring, a set of oil control rings may be fitted. These sets, which are available for both standard and oversize bores, include spring-loaded steel scraper rings and special top rings, which have a shoulder at the top, so that they do not foul the ridge at the top of the bores. For further guidance on bore wear see Page 37.

● *OPERATION C2c*

Gudgeon Pins: The fully floating gudgeon pins are retained by a circlip at each end of pin. To remove pin from piston: mark connecting rod and piston, remove both circlips, then immerse piston in hot oil. This will expand piston and allow pin to be pushed out. Refit pin in same manner, using hot oil, and ensure circlips are fully seated in piston grooves.

● *OPERATION C2d*

Connecting Rods: The small end of connecting rod is bushed and this can be replaced if worn. Press out worn bush, using a suitable sized mandrel, and press in new bush, ensuring that oil-hole is opposite hole in end of rod. Hone, or ream, bush after fitting until gudgeon pin is a light push fit.

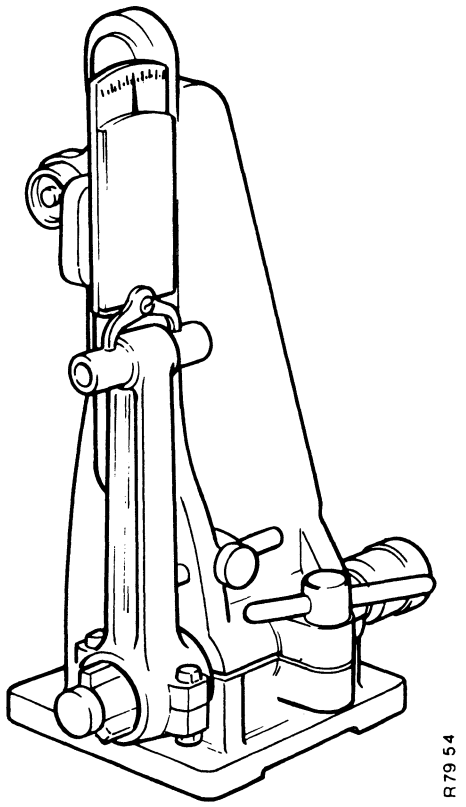

Figure 24. CONNECTING ROD ALIGNMENT GAUGE

Connecting rods should always be checked for alignment whenever they are removed and especially if the piston skirt marking is uneven. The easiest way of checking alignment is by means of a proprietary aligning tool such as shown in Fig. 24, but if such a tool is not available mandrels and V-blocks may be used. Renew any rod that is out of alignment (see Page 38). Do not attempt to straighten a distorted connecting rod.

● *OPERATION C4*

Camshaft is fitted from front of cylinder block and retained in position by locating-plate behind camshaft gear. To remove camshaft it is necessary to remove valve rockers, push rods, lubricating oil and fuel feed pumps. Bolts attaching locating-plate to cylinder block are behind camshaft gear and are accessible through holes in gear. As the tappets will fall and jam against shaft journals when shaft is moved forward it is necessary to invert cylinder block, or if engine is *in situ* to hold tappets up with spring clips or by placing a $\frac{1}{2}$ in. (12·7 mm) diameter 'O' ring on each tappet.

Camshaft bearings are pressure fed from the oil gallery and the shaft journals run directly in cylinder block. Rear journal is drilled to supply a reduced flow of oil to valve rocker shaft.

High-lift camshaft, Part No. 921769, is fitted to all 4/49 engines and 4/55 engines from Serial No. 4913, and when fitting a new camshaft on 4/55 engines prior to this number ensure that an early type shaft — this may be identified by the part number (914673) cast between the two rear cam lobes — is fitted, otherwise the valve heads may foul the pistons.

Crankshaft and Bearings

The steel-backed crankshaft bearings are faced with a thin coating of soft anti-friction material. Early bearings were faced with different material (upper shells with white metal and lower shells with aluminium tin), but later upper shells are faced with aluminium tin and the same shell is used in both upper and lower positions. The later shells are interchangeable but must always be fitted in pairs. Do not fit early white metal upper shells in the lower position.

Once they have run against a journal, bearing shells are not interchangeable and if not renewed must be refitted against the original journal. Bearing caps and shells are very accurately machined and no attempt should be made to file a bearing cap or scrape a bearing. Connecting-rod caps must only be used with their original connecting rod, and main bearing caps must only be fitted to their original cylinder block.

Crankshaft Regrinding: If the crankshaft journals are scored, or worn, the shaft should be reground to 0·010, 0·020 or 0·030 in. undersize and appropriate undersize bearings fitted. Regrind centre

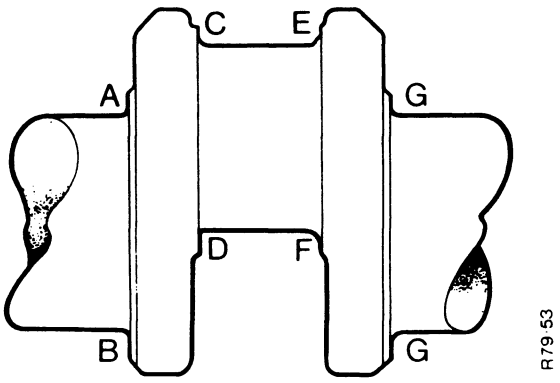

Figure 25. EXAMPLES OF REGROUND FILLET RADII

Incorrect
- A. No radius
- B. Radius not smoothly blended
- C. Radius too large
- D. Radius too small
- E. Radius too small
- F Radius roughly finished

Correct
- G. Correct radius smoothly finished and correctly blended.

journal thrust faces to 0.010 or 0.040 in. oversize (see Wear Limits Page 37).

VERY IMPORTANT

When regrinding crankshaft it is important that the original bearing fillet radius is maintained. It is also important that the surface of the radius is as smooth as the surface of the journal, and the radius is smoothly blended into both surfaces. *A fillet that is incorrectly radiused, roughly finished or not smoothly blended, weakens a shaft and may cause fatigue failure during service.* (Fig. 25).

Crankshaft Rear Oil Seal:

Diagnosis of Oil Leaks:

It is very important that the exact location of an oil leak is found before removing the oil seal retainer from the engine.

An accurate diagnosis can be made using air pressure inside the engine crankcase after the flywheel has been removed.

Test Procedure:

1. Remove the flywheel.
2. Put a plug made of cloth into the breather pipe to prevent air leaking from the crankcase. Turbo-charged engines: Remove the breather body, cover, and diaphragm and put the plug in the base of the breather.
3. Remove the dipstick.
4. Adjust the pressure in an air hose to 69 kPa (10 lb/in²) 0.7 Kg/cm² (0.69 bar).
   Hold the air hose on the dipstick sleeve so that air will flow into the engine crankcase.
5. While there is air pressure inside the crankcase move a piece of slow burning material (or a burning cigarette) around the oil seal retainer. Check for leaks as shown in Figure 1.
   If there are any faults, the air from the crankcase will come in contact with the burning material. When this occurs there will be an increase in the rate of burning which will show the exact position of any leakage.

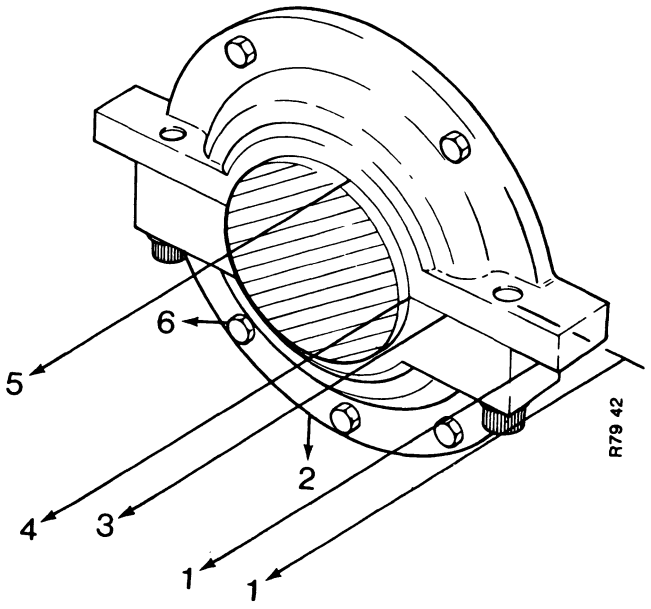

Figure 1. LEAK PATTERN: OIL RETAINER

Action:

1. *Leakage at Point 1 Figure 1:* Remove the engine and install new 'O' rings on the main bearing cap and new gaskets between the engine and the frame.

NOTE: This is not an oil retainer leak and installing a new oil retainer will not prevent leakage from this point.

2. *Leakage from Points 2 to 6. Figure 1.* Remove the oil retainer from the engine. Then carefully do the following procedure.

NOTE: If a new oil retainer is to be installed, also use the following procedure for checking the oil retainer and installing the packings.

Leakage from Point 2 Figure 1:

This is caused by the retainer not seating correctly on the cylinder block.

1. Check the retainer for the faults A, B, C and D shown in Figure 2.
2. If necessary use a smooth file with chalk on the cutting edge to make the surface of the retainer flat.
3. Check that the seat of the socket head screw is parallel to the joint face of the retainer. See fault D, Figure 2. If the seats are not parallel, the retainer will bend when the screws are tightened. If necessary use a file as in Operation 2 to make the faces parallel.

NOTE: The latest type of oil retainers do not have a locating lip. These can be made flat using a sheet of smooth emery cloth and a similar size piece of plate glass.

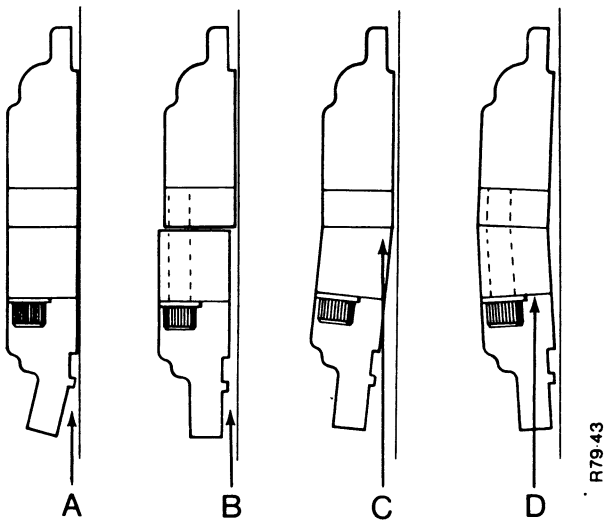

Figure 2. OIL RETAINER FAULTS

Leakage from Points 3 and 4, Figure 1:

This is caused by the following faults:

The two parts of the retainer are not parallel. See Figure 3.

Loose ends of the packings are between the faces. See Figure 4.

1. Remove the retainer from the cylinder block.
2. Remove the socket screws, separate the two parts and remove the packings.
3. Put the two parts of the retainer together. Install and tighten the socket screws.
4. Hold the retainer up to a good light and look at the joint faces.
5. If this check shows a gap between the joint faces, use a file as before to make the faces flat.
6. Put the two parts together. Install and tighten the socket screws.
7. IMPORTANT: Check the face of the retainer that is fastened to the cylinder block.
8. If necessary, use a smooth file to make this face flat.

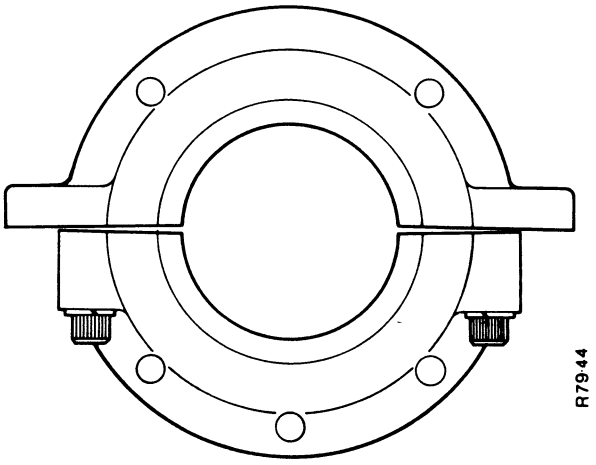

Figure 3. JOINT FACE FAULT

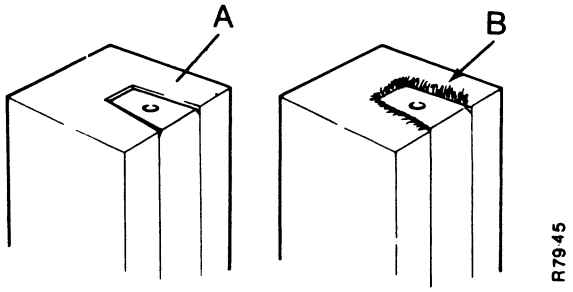

Figure 4. PACKING FAULT

A *Correct* B *Wrong*

Leakage from point 4. Figure 1:
This is caused by the ends of the packings not in correct contact and oil flowing through the gap.

1. Install new packings. See the Assembly Procedure.

Leakage from Point 5. Figure 1:
This is caused by the packings not sealing correctly on the crankshaft. Check the following:

1. Wear or damage to packings.
2. A restriction in the engine breather.

NOTE: On turbocharged engines there must be a hole in the breather body as shown in Figure 5.

3. Wear in piston rings which causes too much pressure in the crankcase.
4. Too much end movement on the crankshaft.
5. Wear on the main bearings.

Leakage from Point 6. Figure 1:
This is caused by oil flowing through the bolt threads.

1. Replace the spring washers with rolled copper washers, Part No. K15489.

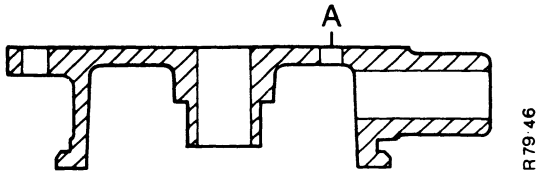

Figure 5. BREATHER HOLE POSITION

A *Breather Hole*

Assembly Procedure

1. Clean the two parts of the oil retainer, remove the packings and clean the packing grooves. Make sure that all the old jointing material is removed.
2. Hold the top part of the oil retainer, packing groove up, in a vice that has soft jaws.
3. Put a small amount of Evostik impact adhesive in the bottom of the packing groove. This will keep the packing in its correct position when the engine is started.
4. Put a packing on the retainer and then push it into the groove with the smooth handle of a screwdriver. Push the handle down on the centre of the packing and slide the handle from the centre to each end of the packing. DO NOT roll the handle when pushing the packing into the groove. See Figure 6.
5. Use a screwdriver blade that is not sharp to push the ends of the packing below the joint face of the retainer. See Figure 7.

IMPORTANT: DO NOT cut the ends of the packings. These are made to the correct length and the seal will fail if the length is decreased.

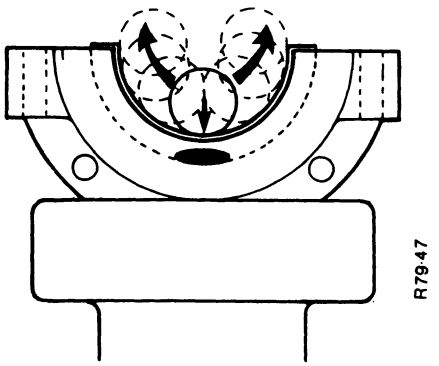

Figure 6. INSTALLING PACKING

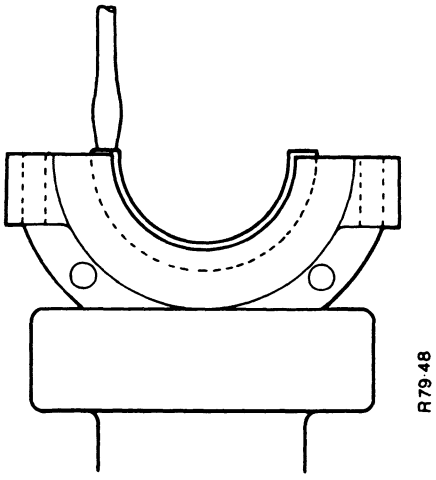

Figure 7. INSTALLING PACKING

6. Remove any loose fibres with a very sharp knife. See Figure 8.
7. Use the same method to install the packing in the bottom part of the retainer, BUT DO NOT use adhesive in the groove.
8. Put the two parts of the oil retainer around a smooth piece of shaft that has been machined to the following dimensions:
   Turbo-charged engines 66.50 mm (2.620 in)
   Other models 63.50 mm (2.500 in)
9. Install and tighten the socket screws.
   This will push the packings into the correct contact with the packing grooves and the correct diameter for installing in the crankshaft. See Figure 9.
10. Remove the socket screws.
    Carefully remove the two parts of the retainer from the shaft.
11. Check that the packings are seated correctly. If for any reason the seating is not correct, the retainer must be discarded and a new oil retainer assembly installed.

Before Installing the Oil Retainer:

1. Use worn 320 grade emery tape to remove any marks from the part of the crankshaft which is in contact with the packings.
2. Clean the face of the cylinder block. Use cleaning fluid if necessary and make sure that any old jointing material is removed.

Installing the Oil Retainer:

Method A: Using gaskets:

1. Put a small amount of Evostik impact adhesive on the retainer faces which fit against the cylinder block.
   Put the gaskets in position on the retainer.
   Use a sharp knife to cut the ends of the gaskets level with the ends of the retainer faces.
2. Put an even layer of Wellseal joint compound on the face of the cylinder block.

IMPORTANT: Do not use a thick type of joint material as this will cause the retainer to bend when the bolts are tightened.

3. Put a thin strip of Loctite Superfast Flange Sealant 573, Part No. K965910 on each side of one part of the retainer.
   See Figure 10.
4. Replace the spring washers on the haxagon head bolts with copper washers. Part No. K15489.
5. Put a small amount of engine oil on the packings.
   Put the two parts of the retainer in position on the crankshaft and install the socket screws finger tight.
   Install the hexagon head bolts.

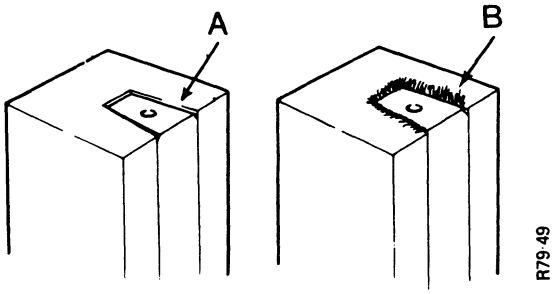

Figure 8. CUTTING PACKING
A *Correct* B *Wrong*

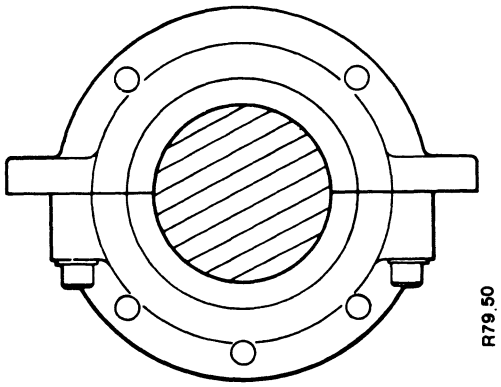

Figure 9. RETAINER ON SHAFT

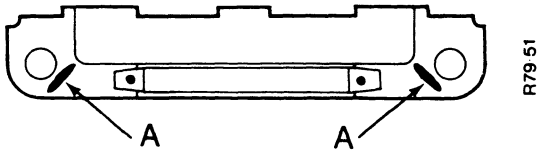

Figure 10. POSITION OF SEALANT
A *Loctite Superfast Flange Sealant 573*

6. Tighten the bolts and socket screws in the following sequence.
   i. Tighten the socket screws evenly, then loosen both socket screws one half turn.
   ii. Tighten the hexagon head bolts.
   iii. Tighten the socket screws.
   iv. Loosen the hexagon head bolts one half turn. Wait for 30 seconds, then tighten the hexagon head bolts.

Do this procedure to make sure that there are no gaps between the two parts of the retainer and between the face of the retainer and cylinder block.

Method B: Not using gaskets:

NOTE: When Loctite Superfast Gasket Eliminator 504, Part No. K965909 is used instead of gaskets, all oil must be removed from the joint surfaces. Make sure there is no oil in bolt or drain holes which can get on to the joint surfaces before the seal material has become hard.

The strength and gap filling characteristics of this seal material will be increased if the joint surfaces are sprayed with Loctite Superclean Safety Solvent before the seal material is applied.

1. Put a thin strip of Loctite Superfast Flange Sealant 573 on each side of one part of the retainer. See Figure 10.
2. Put a thin strip of Loctite Superfast Gasket Eliminator 504 on the face of the retainer. See Figure 11.

Then follow the same procedure as in Method A, Operations 4, 5 and 6.

NOTE: On later engines, the oil retainer is made without a lip. An extra hole is drilled at the bottom of the retainer as shown in Figure 5.

Oil retainer assembly, Part No. K964994 is available for earlier engines. This oil retainer has no lip but only four holes. When installing, use copper washers instead of spring washers on the bolts.

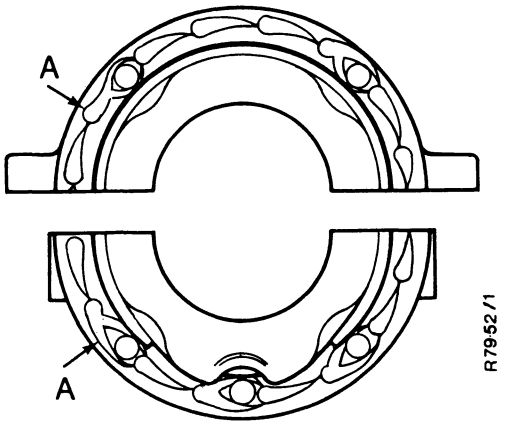

Figure 11. POSITION OF GASKET ELIMINATOR

A *Loctite Superfast Gasket Eliminator 504*

FUEL SYSTEM

The performance of a diesel engine depends very largely on the fuel system and the most important factor in trouble-free operations is *cleanliness of the fuel.* Dirt and dust — particularly the very fine dust readily carried in the air and in suspension in the fuel tank — can cause rapid and extensive damage to the injection pump and injectors, resulting in bad starting, loss of power and expensive repairs.

The importance of clean fuel storage and the precautions to be taken to prevent fuel contamination when refuelling must be impressed on the operator.

Care should also be exercised in the workshop. The bench used for servicing fuel injection equipment should be situated in a well-lit and separate part of the workshop. If possible an insulated and dust-proof room should be provided in which the servicing equipment can be permanently installed.

Special equipment is required and the minimum essentials consist of the following: Two safety containers — one filled with petrol for soaking dirty nozzles and the other filled with test oil, or clean diesel fuel, for assembly of cleaned components. A nozzle bench plate, which should be screwed to the bench with the jig end overhanging, so that an injector can be slackened or tightened. A nozzle setting outfit should also be securely bolted to the bench with a suitable canister to collect the spray and protect the operator against accidental contact with the spray. The flushing device used in conjunction with the setting outfit is essential. The nozzle cleaning kit (Fig. 27) includes a probing tool but not needles: correct diameter needles can be obtained separately as required.

Although the above items are an essential minimum for injector servicing, more complex apparatus or additional equipment are available where the volume of work makes their purchase worthwhile.

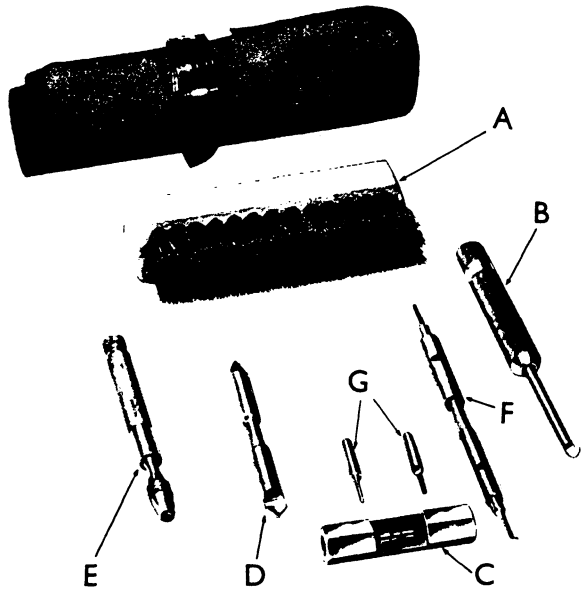

Figure 27. C.A.V. NOZZLE CLEANING KIT

A. Brass wire brush
B. Nozzle body groove scraper
C. Nozzle plunger cleaner
D. Nozzle body seat scraper
E. Holder—probing needle
F. *Pintle hole cleaner
G. *Probes—pintle hole cleaner

*Not required for D.B. Nozzles.

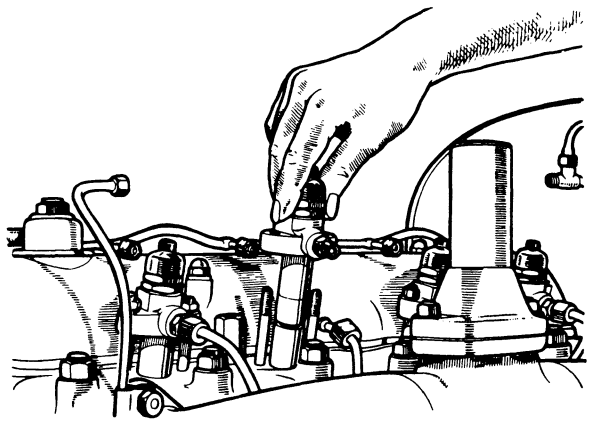

Figure 28. INJECTOR REMOVAL

● *OPERATION D1*

Injector removal:

1. Wipe injectors and adjacent areas.
2. Disconnect and remove leak-off pipe (Fig. 28.)
3. Disconnect high-pressure pipe unions from injectors.
4. Remove nuts holding down injectors evenly, to prevent distortion.
5. Withdraw injectors carefully. Seal inlet with cap and fit a protection sleeve on nozzle end.
6. Clean injector bores in head and remove copper sealing washers. Plug bores with clean rag to prevent dirt entering cylinders.

It is essential that the copper washer be used under injector when refitting to engine. Check that the seat in head is clean and that the old washer has not been left in the recess. The use of two washers will raise nozzle tip so that the spray impinges on cylinder head. This causes a loss of efficiency and excessive exhaust smoke.

Injector Servicing

Nozzle Testing: The hand tester shown in Fig. 29 is adequate for testing and pressure setting injectors.

Attach injector to tester and place a canister round the nozzle to ensure that spray does not

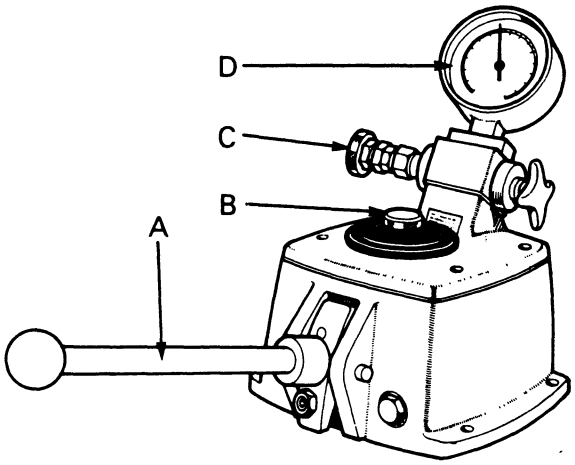

Figure 29. INJECTOR NOZZLE TESTER

A. Pump handle
B. Reservoir
C. Injector connection
D. Pressure gauge

contact the body. The force of the spray is such that it will easily penetrate the skin, even through clothing. The resultant oil under the skin is very difficult to treat and can be a very uncomfortable wound. The canister will also help to condense the very fine spray which forms an objectionable atmosphere. If regular nozzle testing is contemplated a totally enclosed test chamber with exhauster is advocated.

● *OPERATION D1a*

Pressure Test: With injector mounted in the test outfit, depress hand lever several times to fill injector and expel any air. Depress lever very slowly and observe highest pressure reading that is obtained before needle on pressure gauge flicks. This is the pressure at which injection takes place. The correct pressure for new injectors is 185 atmospheres (188 kg/cm²), and for used injectors 175 (180 kg/cm²) atmospheres.

If pressure is incorrect but nozzle is clean and otherwise satisfactory, it should be set to correct figure as follows: Remove dome cap and slacken locknut, and using a large screwdriver in pressure adjusting screw adjust the screw. Only a very small movement will be required unless the nozzle has only just been assembled and the pressure not previously set. When screw has been adjusted, tighten locknut and recheck pressure. (Fig. 30)

Back Leakage Test: Operate hand pump until pressure is about 170 atmospheres. Release the handle quickly and measure, with a stop-watch, the time taken between pressure gauge pointer passing the marks for 150 and 100 atmospheres (154 and 104 kg/cm²) as it gradually falls. For a satisfactory nozzle the time taken should be between 6 and 25 seconds.

Dry Seat Test: Carefully wipe nozzle dry. Build up pressure to 10 atmospheres below the injection pressure.Examine nozzle whlist under this pressure. It should be dry and free from leakage. If the nozzle is inadvertently caused to inject, the tip should be re-wiped dry and tested again.

Examine injector for signs of leakage at nozzle cap nut, spring adjusting nut, and copper sealing washers.

Atomisation Test: Isolate pressure gauge by closing valve. Apply eight quick jerks and examine the spray quality. The sprays should be free from coarse or solid streaks and the tip should remain dry. There should be four sprays equally spaced at an inclusive angle of 140°. They are offset 10° to allow for the tilt of the injector in the cylinder head.

● *OPERATION D1b*

Nozzle Cleaning: If injector fails to pass any of the above tests it must be dismantled, cleaned and retested. Note that spring pressure must be released before removing nozzle. Unscrew nozzle cap, using a close-fitting spanner on the flats provided, and

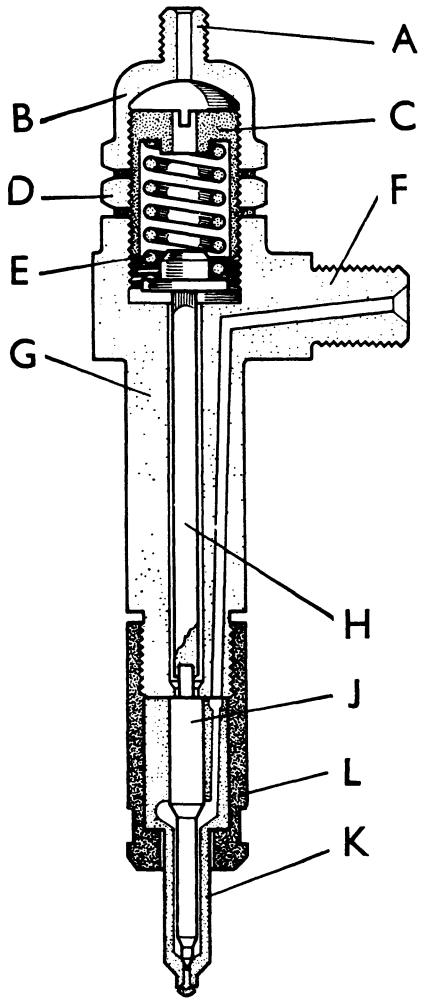

Figure 30. SECTIONED INJECTOR

A. Leak-off connection
B. Cap
C. Adjusting screw
D. Locknut
E. Spring
F. Fuel inlet connection
G. Holder
H. Plunger
J. Needle
K. Nozzle
L. Nozzle nut

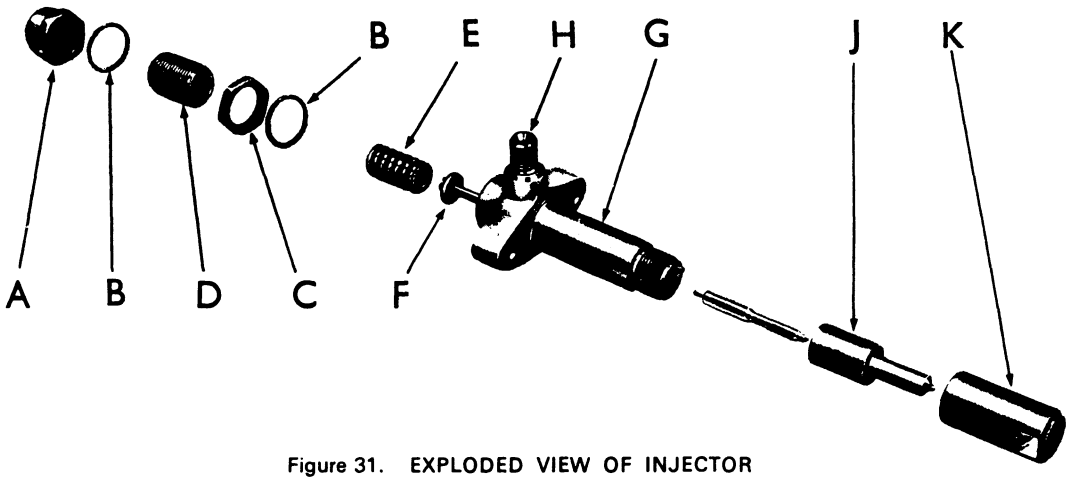

Figure 31. EXPLODED VIEW OF INJECTOR

A. Cap
B. Sealing washer
C. Locknut
D. Adjusting screw
E. Spring
F. Plunger
G. Holder
H. Fuel inlet connection
J. Nozzle
K. Nozzle nut

remove nozzle, noting that it will only fit in one position because of the locating dowels. Remove needle valve and place in petrol to soften carbon. Examine nozzle and needle for damage, overheating or scratch marks on the lapped working surfaces. If excessive overheating has occurred, denoted by a dark blue colour of the needle, or if seat or working surfaces are damaged, reconditioning will be required and a new nozzle should be fitted.

If the nozzle is not damaged it should be cleaned using the special tools provided in the nozzle cleaning kit shown in Fig. 27. Firstly clean fuel oil channels and bores in nozzle. Scrape carbon from valve seat with the brass scraper.

Using the special groove scraper, clear carbon deposits from oil gallery. Clean spray holes with probing tool fitted with a probing wire of the correct diameter.

Great care should be exercised when using the probing wires. If a wire is broken off in the hole it is often impossible to remove it, and the nozzle is then useless. After clearing the holes scrape carbon from valve seat with the V-tipped brass tool. Next use the tool with the thin blade radiused at its tip to clean carbon out of the sac. After cleaning with the tools, the nozzle should be thoroughly cleaned with fuel. This should be done by placing nozzle, without needle, in the reverse flushing attachment and connecting to pressure tester in place of an injector. Operation of the tester will then thoroughly flush all particles of loose carbon from the nozzle.

With the brass wire brush, gently clean needle valve, paying particular attention to valve seat and needle tip. Brush carbon from nozzle stem and tip.

Reassembly: The needle valve should be fitted to nozzle whilst both are under the surface of clean fuel oil or test oil. Only in this way can dust be excluded from assembly. The needle should slide smoothly in the nozzle and this should be tried several times whilst under the surface of fluid. Needle and nozzle are assembled as a pair and under no account should they be interchanged.

The nozzle should then be assembled on to injector body. In order to avoid distorting needle or plunger the spring should be released. Remove dome cap, slacken locknut and slacken pressure adjusting screw right back until there is no pressure on spring. Make sure that mating surfaces between nozzle and injector body are perfectly clean. Place nozzle on body with the dowels in correct engagement so that the two faces are in perfect contact, i.e., not held apart by spring pressure. Place cap over nozzle and tighten adequately but not overtight. Retighten pressure adjusting screw and reset the pressure on spray tester. Test the spray, leak back, etc. If the injector is not required for immediate use

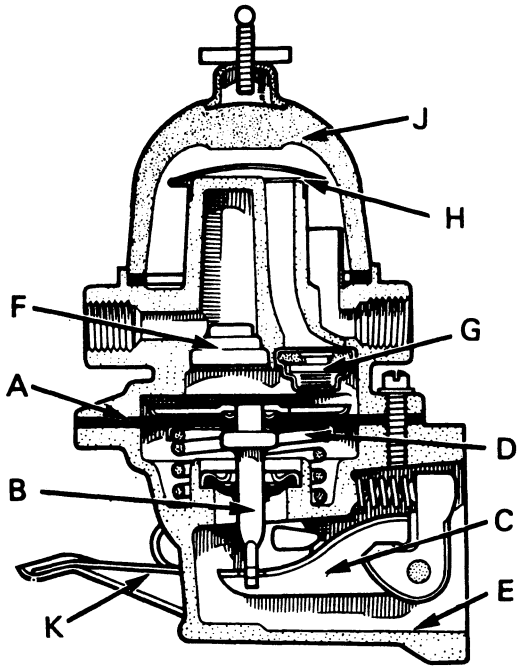

Figure 32. FUEL FEED PUMP

A. Diaphragm
B. Diaphragm pull-rod
C. Connecting link
D. Spring
E. Body
F. Outlet valve
G. Inlet valve
H. Filter screen
J. Sediment bowl
K. Hand primer

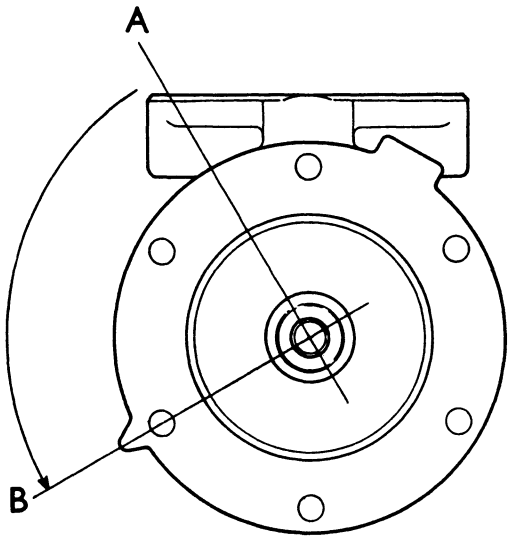

Figure 33. FITTING FEED PUMP DIAPHRAGM

With the diaphragm tab at position A, fit diaphragm on to pump body until pull rod enters link slot, then turn diaphragm 90°, so that tab moves to position 'B' to lock pull-rod in link slot.

it should be stored in a sealed plastic bag or similar container. (Fig. 31.)

Fuel Feed Pump: The fuel feed pump is mounted on right-hand side of engine crankcase and actuated by a short push-rod from an eccentric on the camshaft.

● *OPERATION D2*

To remove feed pump, first disconnect fuel pipe union at fuel tank end of pipe, so that fuel will not siphon out of tank when pump end of pipe is disconnected. Disconnect both pipes from pump and remove the two bolts attaching pump to cylinder block. When the pump has been removed, the push-rod may be withdrawn from cylinder block.

● *OPERATION D2a*

Renewing Diaphragm: Clean exterior of pump and mark top and bottom halves so that they can be replaced in the same position. Remove the six screws attaching upper half of pump to base then remove the upper half. (Fig. 32.)

Remove diaphragm complete with pull-rod by turning diaphragm through 90°, which should release pull-rod from connecting link.

Clean both halves of the pump. Position new diaphragm with tab at position shown in Fig. 33. Press centre of diaphragm down against spring until the "T" end of pull-rod enters slot in connecting link, then turn diaphragm through 90° so that pull-rod and connecting link are locked together. Refit upper half, ensuring that assembly marks are aligned, and replace screws. Hold the priming lever depressed whilst tightening the six retaining screws so that the diaphragm is not taut.

Fuel Filter: The double fuel filter has two paper elements connected in series so that all fuel must pass through both filters. The element in the first filter should be renewed every 500 hours and the second filter element renewed every 1000 hours. Do not change elements from one filter to another and do not attempt to clean an element: always discard the dirty element and fit a new one. (Fig. 34.)

● *OPERATION D3*

To Fit a New Filter Element: Clean outside of filter then remove bolt securing base of first filter

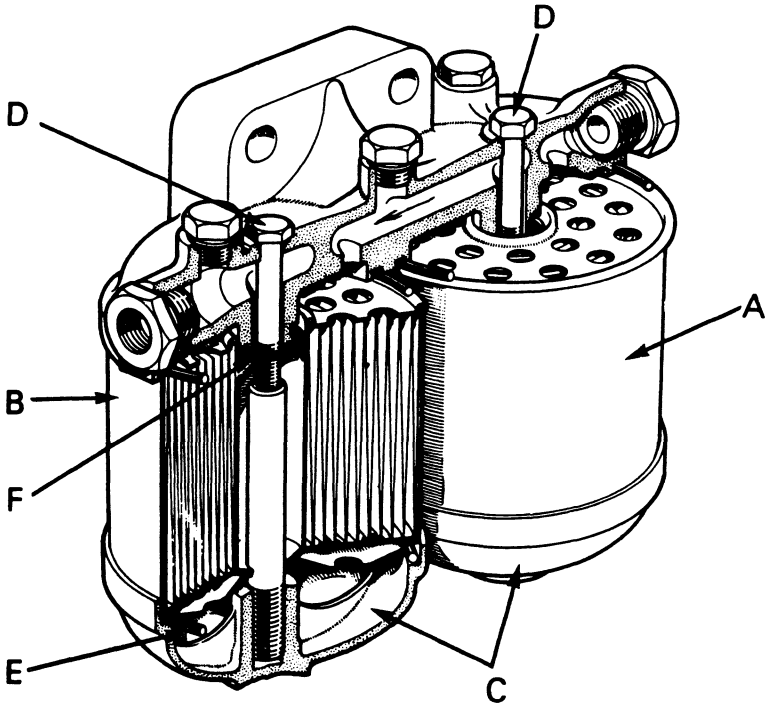

Figure 34. FUEL FILTER

A. Element—first filter
B. Element—second filter
C. Bowl
D. Retaining bolt
E. Sealing ring—outer
F. Sealing ring—inner

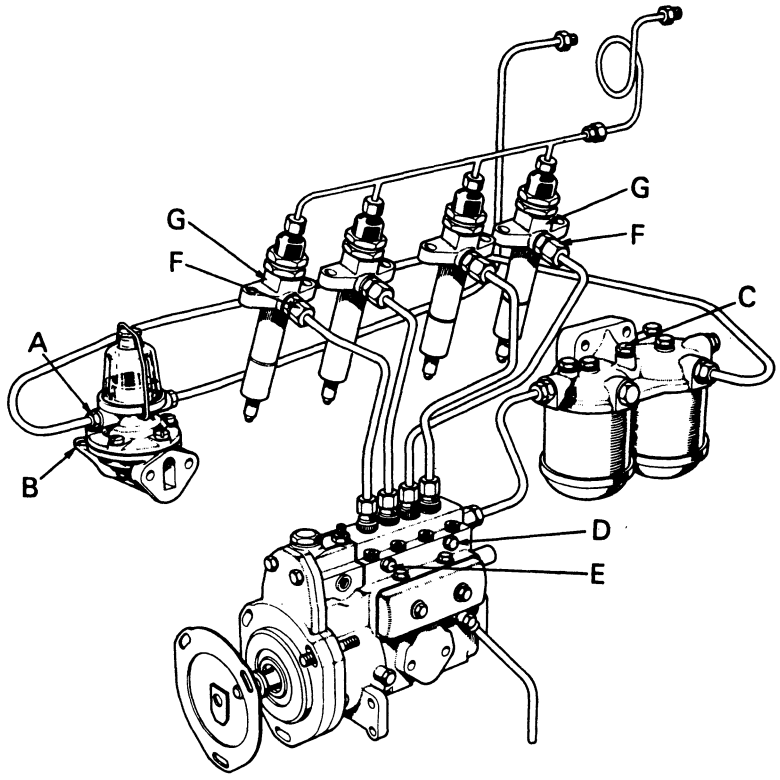

Figure 35.

FUEL SYSTEM — 1200 TRACTORS

A. Outlet union—feed pump
B. Hand primer
C. Vent plug—filters
D. Vent plug—injection pump
E. Vent plug—injection pump
F. Unions—injectors
G. Injectors

to filter head whilst holding base and element with other hand. Remove base, discard element and sealing rings (new rings are supplied with element). Flush out base and fit new element, ensuring that it seats correctly on sealing rings in base and head. Fit new washer on retaining bolt. Replace bolt and tighten firmly but not excessively.

● *OPERATION D4*

Venting the Fuel System: It is essential that no air is trapped in the fuel system and if engine fails to start, or if the system has been disturbed, vent system as follows:

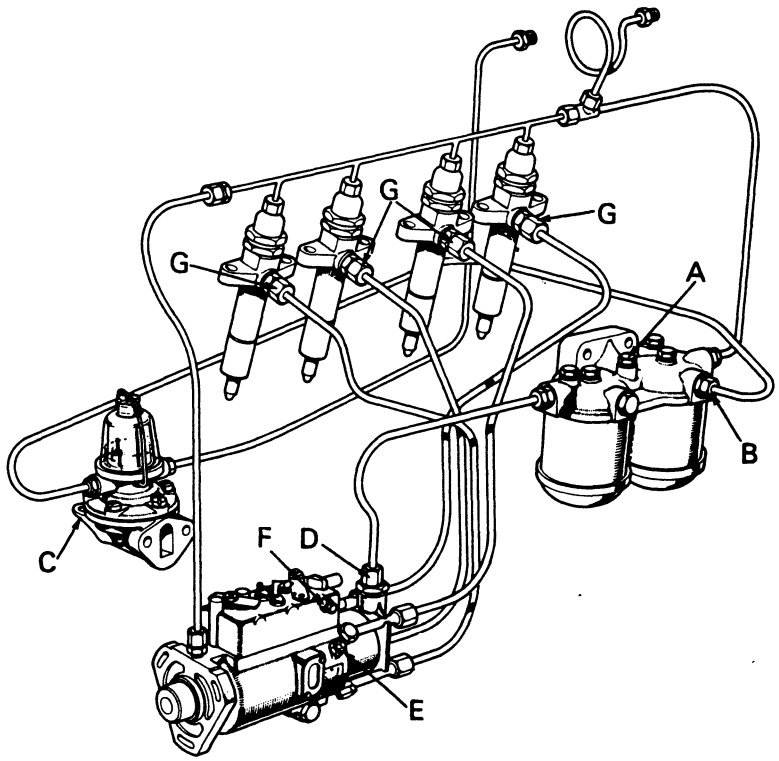

Figure 36.

FUEL SYSTEM — 990 TRACTORS

A. Vent plug—filter
B. Union—filter inlet
C. Hand primer
D. Union—injection pump inlet
E. Vent plug—injection pump
F. Vent plug—injection pump
G. Union—injector

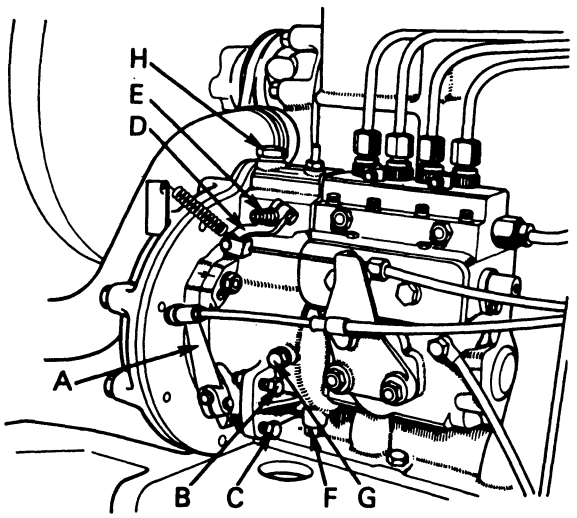

Figure 37. FUEL INJECTION PUMP — 1200 TRACTORS

A. Throttle lever	B. Maximum speed stop
C. Idling speed stop	D. Stop control
E. Excess fuel device	F. Drain plug
G. Level plug	H. Filler plug

1200 Tractors — Figure 35

1. Ensure there is a minimum of 2 gallons (9 litres) of fuel in tank.
2. Check that sediment bowl is clear of water and sediment. Remove and clean bowl if necessary. (Page 1.)
3. Clean outside of filters and venting points.
4. Release fuel-feed-pump outlet union A. Operate hand priming lever B until glass bowl is full of fuel and no air bubbles are passing through, then tighten union.
5. Unscrew vent plug C on top of fuel filter. Operate hand primer until air-free fuel issues then tighten plug.
6. Release both injection-pump vent screws D and E. Operate hand primer until air-free fuel is expelled then tighten both plugs.
7. Unscrew high-pressure unions F on injectors. Open throttle, place engine stop control in "run" position and turn engine with starter motor until air-free fuel is ejected.
8. Tighten injector unions. Start engine and check that there are no fuel leaks.

990 Tractors — Figure 36

1. Ensure that there is not less than 2 gallons (9 litres) of fuel in tank.
2. Check that sediment bowl is free of water and sediment. Remove and clean bowl if necessary.
3. Clean outside of filters and venting points.
4. Remove vent plug A from filter and release pipe union B. Operate hand priming lever C until air-free fuel appears at union then tighten. Continue pumping until air-free fuel issues from filter then replace and tighten plug.
5. Unscrew injection-pump inlet union D and operate hand primer until air-free fuel appears then tighten union.
6. Release vent plug E on injection pump. Operate priming lever until air-free fuel is discharged then tighten plug. Release plug F and continue pumping until fuel appears at the plug then retighten plug.
7. Unscrew high-pressure unions G on injectors. Open throttle, place engine stop control in "run" position and turn engine with starter motor until air-free fuel is ejected.

   If difficulty is experienced in obtaining air-free fuel from injector unions this is probably due to pressurising valves inside banjo bolts at pump end of pipes. Remove one banjo bolt, replace this with a standard banjo bolt and continue venting system. Refit original banjo bolt after engine has been running.
8. Tighten injector unions. Start engine and check that there are no fuel leaks.

Injection Pump

The injection pump is attached by three studs on the engine carrier plate, and the pump mounting holes are slotted to permit pump body to be turned for injection timing adjustment. To assist in obtaining the correct timing position the pump flange is marked with a groove and when the timing is set during assembly a mark is made on the carrier flange in line with the mark on pump. Any pump can thus be fitted and the original timing obtained by placing the two marks in alignment.

The pump is driven from the camshaft by means of an intermediate gear and correct timing of the injection pump can only be obtained if all the timing gears are meshed correctly. (Fig. 53.)

Injection Pump Controls: The pump is fitted with a throttle control, which determines the maximum and minimum engine speed, and a stop control, which stops the engine by cutting off the fuel supply to the injectors.

On 1200 Tractors (Fig. 37) the throttle control lever is on the left-hand side of pump. To set the engine speeds, disconnect linkage from lever and, whilst holding lever forward against lower stop, adjust screw so that engine idles at 600–650 rev/min then lock screw with locknut. Hold lever against rear stop and set this so that maximum no-load engine speed is 2450-2475 rev/min, then tighten locknut. Connect throttle linkage; check that when hand throttle lever is fully closed, pump lever is touching lower stop, and when hand lever is fully open pump lever is against upper stop. The engine stop control is connected to the pump lever by a flexible cable. The cable should be adjusted so that when the pump lever is fully forward, and the control knob is in the "stop" position, there is $\frac{1}{8}$ in. (3 mm) slack in the cable.

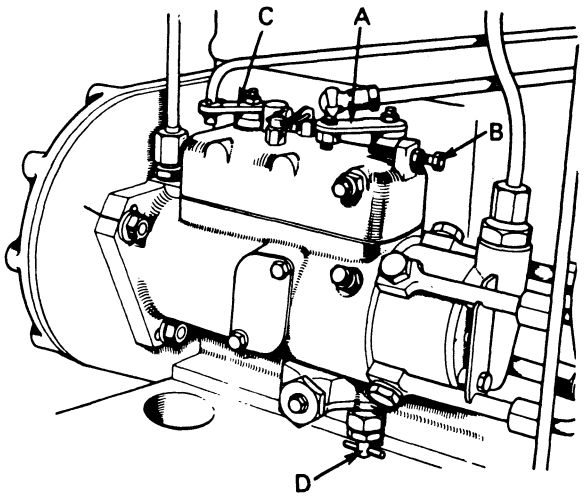

Figure 38. FUEL INJECTION PUMP — 990 TRACTORS

A. Throttle lever B. Maximum speed stop
C Stop control D. Manual retard device

On 990 Tractors (Fig. 38) the rear lever is the engine throttle. To set the engine speeds, disconnect lever from control rod and adjust so that engine idles at 600-650 rev/min, then hold lever against rear stop and set this so that maximum speed is 2325–2350 rev/min. The lever towards the front of the pump is the stop lever and the connecting rod should be set so that when the stop control handle is in the "stop" position the pump lever is fully forward and touching projection on pump case.

Cold Weather Starting: The pump incorporates a cold-starting device. On 1200 Tractors there is an excess-fuel button (Fig. 37) in the centre of the fuel cut-off shaft. When this is depressed the pump delivers additional fuel until the engine starts and it is then automatically reset.

On 990 Tractors the cold-starting device is a wing-nut on the underside of the pump (Fig. 38). When the wing-nut is screwed "in", the automatic advance mechanism is inoperative and the pump is held retarded to assist starting. As soon as the engine is running the wing-nut must be screwed "out", otherwise erratic running with black exhaust smoke will occur. Do not screw wing-nut in immediately after an unsuccessful attempt to start the engine but wait 10 to 15 seconds, otherwise pressure inside pump may not have fallen and screwing wing-nut "in" will then hold pump in advanced position and make starting more difficult.

Ether Plug: When starting in sub-zero temperatures, unscrew ether plug from inlet manifold, dip felt pad in ether, or a proprietary starting fluid, replace plug and start engine immediately.

WARNING: Serious damage can be caused to an engine by using an excessive amount of ether. The plug should be removed, the pad soaked in ether and then replaced. *Ether in excess of the quantity absorbed by the felt must not be added.*

Thermostart: This is available on tractors which operate in very cold climates and consists of an igniter unit screwed into the inlet manifold and fed by fuel from the engine leak-off pipe.

To Start an Engine Fitted with a Thermostart:

1. Place engine stop control in "run" position and hand-throttle lever "fully open".
2. Depress excess fuel button (1200) or screw manual retard device "inwards".
3. Turn starter switch key 60° clockwise and hold in this position for 10–15 seconds (this will supply current to heat the unit sufficiently to vaporise fuel).
4. Depress clutch pedal and turn switch key a further 30° clockwise (this will continue supplying current to the unit and also operate starter motor; air drawn through manifold will then mix with vaporised fuel and be ignited, to fill engine cylinders with warm air).
5. If engine does not start after fifteen seconds, return key to "heat" position for five seconds then re-engage starter.
6. As soon as engine starts, release key and allow it to return to "run" position (30° clockwise from "off" position).
7. When starting a warm engine, turn key 90° clockwise to operate starter in normal way.

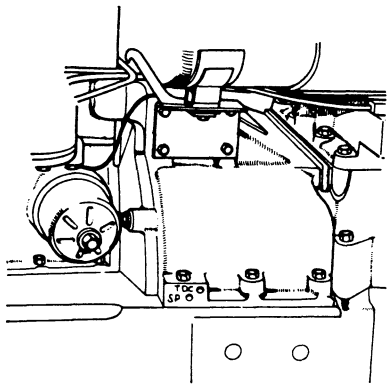

Figure 39. ENGINE TIMING APERTURE

● *OPERATION D8*

Injection Pump Removal: The pump is attached to engine carrier plate and in order to remove pump it is necessary to first release drive gear from pump shaft. If engine timing cover does not incorporate an access plate it is necessary to remove the complete timing cover (see Page 31).

1. Remove valve rocker cover, turn engine until No. 1 inlet valve closes and insert timing pointer into SP hole (Fig. 39) and continue turning engine until pointer drops into flywheel indentation. Place tractor in gear, to prevent engine being turned whilst pump is removed

2. Drain cooling system and remove bottom radiator hose. Disconnect controls and fuel pipes from pump.
3. Remove access plate from timing cover, unless timing cover has already been removed because it does not have a plate. Clean and mark idler gear and pump gear with a felt-tipped pen, or pencil.
4 **1200 Tractors:** Unlock tabwasher and remove nut from injection pump shaft. Using a short extractor—this must not be longer than $3\frac{1}{2}$ in. (89 mm)—engaged in the holes in gear, release gear from shaft taper, then remove extractor. A three-legged extractor is required for 12 DP gears and a two-legged extractor for 8 DP gears.
5. **990 Tractors:** Unlock tabwasher and remove the three bolts attaching gear to pump. The gear is not a tight fit on pump shaft and will remain in case when pump is removed.
6. Check that marks on pump flange and carrier plate are aligned, or scribe a line across flange and plate. Remove nuts attaching pump to carrier plate then withdraw pump and allow gear to remain in timing case.

Pump Replacement: First check that pump gear has not been moved, by noting that the mark across intermediate and pump gear teeth has not been disturbed, then note position of gear hub and set pump shaft in the same relative position. On 1200 Tractors the key in pump shaft should be at approximately 2 o'clock position and on 990 Tractor pumps the slot in pump shaft should be at approximately 4 o'clock position. Fit the pump in position, ensuring that the key or dowel is correctly engaged. Fit a new tabwasher and replace shaft nut or bolts. Align pump and carrier plate marks before bolting pump in position, then tighten nut (1200) to 45 lb ft (6·22 kg metres) and bolts (990) to 20 lb ft (2·76 kg metres) before locking with tabwasher. Replace access plate, or timing cover (see Page 31), connect pump controls and fuel pipes. If pump has been reconditioned, or a new pump is being fitted, replace elements in both fuel filters before venting fuel system.

On 1200 Tractors the pump cambox must be filled with clean engine oil to the level plug shown in Fig. 37.

Replace valve rocker cover and bottom hose, refit cooling system.

Pump Timing: If the timing-mark on pump flange becomes obliterated, or if new components are fitted in pump, the pump flange should be re-marked as follows:

1200 Pump: With the pump mounted on the test machine and pump fuel inlet connected to test tank, remove No. 1 (front) valve holder Remove delivery valve, volume reducer and spring, then replace holder and fit a swan-necked spill pipe — this can be made from a scrap injector pipe. Turn the fuel "on", so that it flows by gravity into pump and slowly turn pump shaft until fuel commences to drip out of pipe. Allow fuel to drip out of pipe until

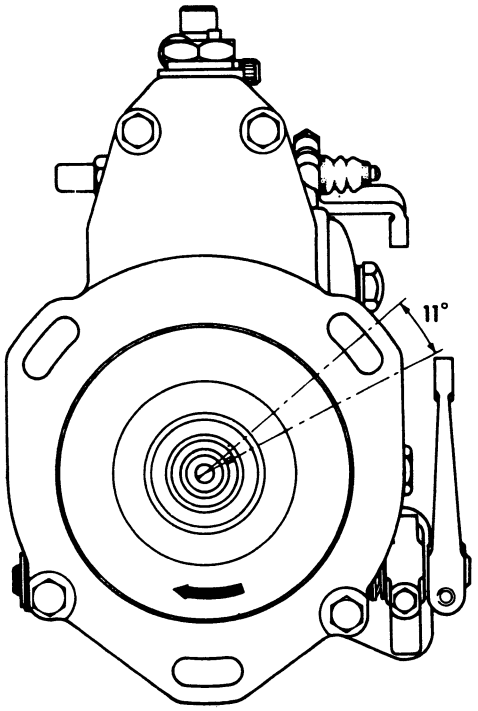

Figure 40. INJECTION PUMP TIMING — 1200

Timing mark on periphery of pump flange to be 11° anti-clockwise from centre line of shaft keyway when inlet port is closing on No. 1 element.

there are no air bubbles, then very slowly turn pump in direction of rotation (clockwise when looking at drive end) until fuel ceases to drip from pipe; this is the point at which the plunger has risen to commence injection and is therefore SP point on No. 1 cylinder. With the pump camshaft in this position, measure 11° from centre-line of shaft keyway then mark pump flange (Fig. 40). Ensure that pump mark is quite clear and cannot be confused with any previous mark then remove pipe and holder, replace delivery valve, spring and volume reducer. Tighten valve holder to 30 lb ft (4·15 kg metres) and fit locking clamp.

990 Pump: Attach stirrup pipe, CAV tool 7144/262 to Nos. 1 and 4 injector pipe connections and connect other end of pipe to an injector tester. Set pump so that the shaft slot is towards the top of pump then operate tester handle to build up a pressure of 30 atmospheres. Fit CAV service tool 7144/112U on to the pump shaft and slowly turn pump shaft in the direction of rotation (clockwise when looking at drive end) until pump becomes rigid. This is the point at which injection commences and is therefore SP point on No. 1 cylinder. With the pump in this position, use the tool disc to measure 66° past the centre line of the shaft slot and mark the pump flange (Fig. 41). Ensure that the flange mark is quite clear and cannot be confused with any previous mark, then remove stirrup pipe and marking disc.

Checking Engine Spill Timing: If it is necessary to check the timing of the injection pump to the engine this can be carried out as follows:

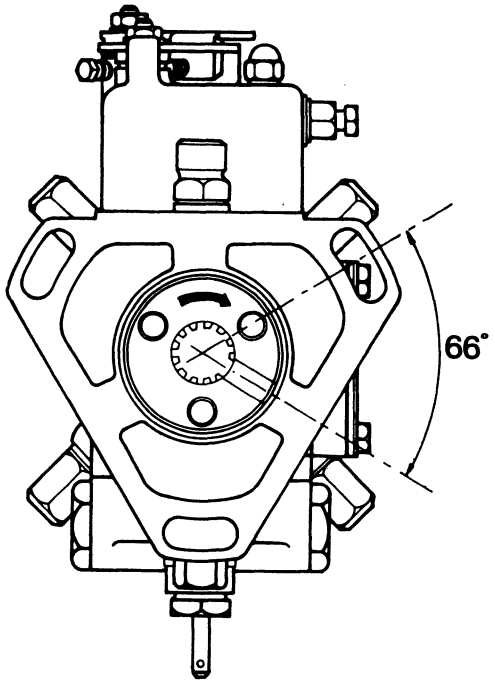

Figure 41. INJECTION PUMP TIMING — 990

Timing mark on pump flange to be 66° anti-clockwise from rotor slot when pump is at point of injection on No. 1 cylinder.

1200 Tractors: Remove No. 1 (front) valve holder. Extract delivery valve, volume reducer and spring, then replace holder and fit a swan-necked spill pipe — this can be made from a scrap injector pipe. (Fig. 42.)

Place engine stop control in "run" position and whilst operating feed pump priming lever turn engine in direction of rotation: if injector nuts are released and injectors are raised slightly, to release compression, engine can be turned with the fan. Grind a blunt point on the end of a short piece of $\frac{5}{16}$ in. (8 mm) rod and insert this into the hole marked "SP" on left-hand side of clutch housing. (Fig. 39.) Whilst an assistant is slowly turning the engine and operating the priming lever, rest a finger against the rod and observe the fuel dripping out of the pipe. The point at which injection commences will be reached when fuel ceases to drip out of pipe and this should coincide with the rod dropping into flywheel indentation. If the fuel flow ceases before, or after, the rod is felt to fall into the flywheel indentation, release pump mounting nuts and turn the pump body slightly — direction of engine rotation to retard and opposite to engine rotation to advance. Fully tighten mounting nuts then recheck timing.

When timing is correct, remove spill pipe, replace delivery valve, volume reducer and spring, then replace valve holder and injection pipe.

990 Tractors: Make a capillary tube as shown in Fig. 43 and attach this to the injection pump in place of No. 1 injector pipe. With engine stop control in "run" position, turn engine slowly until fuel rises

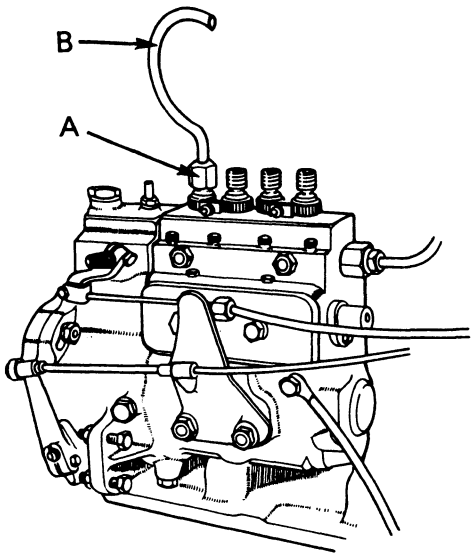

Figure 42. TIMING 1200 INJECTION PUMP

A. No. 1 injector pipe connection B. Swan-necked pipe

midway up the capillary tube. Place the engine stop control in the "stop" position and continue turning engine. As the ports in the rotor head line up ready for injection the pressure of air trapped in the blanked off portion of the tube will force fuel out of the capillary tube to charge the plungers. Turn engine slowly from this point and watch fuel level in capillary tube; level will fall as plungers are charged

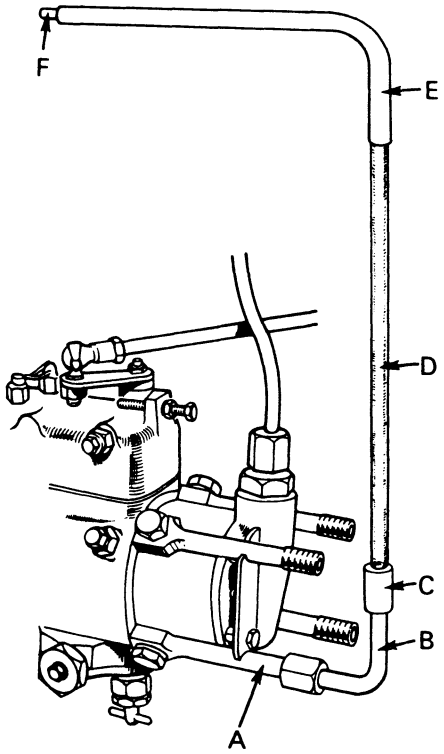

Figure 43. TIMING 990 INJECTION PUMP

A. No. 1 injector pipe connection B. Sawn-off injector pipe
C. Plastic sleeve D. Glass capillary tube
E. Plastic tube F. Plug

but as soon as plungers move inwards, to commence injection, the fuel level will start to rise. The fuel level should therefore start to rise when the engine reaches spill point.

Grind a blunt point on a short piece of $\frac{5}{16}$ in. (8 mm) diameter rod and insert this into the hole marked "SP" on left-hand side clutch housing. (Fig. 39.) Whilst an assistant is slowly turning engine, rest a finger against end of rod and watch fuel level in capillary tube. Initially set the pump so that fuel level in tube commences to fall at the same time as pointer is felt to fall into flywheel indentation, then measure $\frac{1}{8}$ in. (3 mm) anti-clockwise from pump flange timing-line and scribe a line on engine carrier plate. Check that scribed line is quite clear, in the correct direction and the correct distance from pump mark, then release the mounting bolts and turn pump body to align pump and carrier plate marks. Re-tighten mounting bolts and refit injector pipes.

If the pump is not advanced as described but is set to "SP" mark on flywheel the spill timing will be set to 11° B.T.D.C., which would be correct for a 4/47 engine but is 6° retarded for 4/49 engines. As 4/49 engines have the same flywheel as 4/47 engines it is necessary to advance the pump 6° — which is equivalent to $\frac{1}{8}$ in. (3 mm) on pump flange — in order to obtain the correct spill timing of 17° B.T.D.C.

Injection Pump Fuel Setting: Once the fuel delivery has been set on a pump it is most unlikely that it will require subsequent readjustment. If incorrect setting is suspected, do not attempt to reset the pump on the engine but remove pump and check fuel delivery on a Hartridge Test Bench. For details of delivery settings see Page 39.

● *OPERATION D9*

Fuel Tank Removal: The easiest way of removing the fuel tank is to remove the tank complete with instrument panel and then separate tank from panel.

First drain tank by unscrewing union at pump end of pipe and then allowing fuel to siphon into a *clean* container. Do not release union at tank end of pipe as this will allow air into pipe and prevent fuel siphoning out of tank. Disconnect engine-speed-indicator drive cable and wiring to panel. Some of the wires are fitted with snap connectors, but others, such as oil warning switch wire, will have to be disconnected at their terminals.

Remove tank mounting bolts and disconnect engine stop control. Disconnect fuel outlet and fuel leak-off pipes from tank then remove tank and panel.

Replace tank in reverse order of removal, ensuring that seating pads are in position and wires are replaced in their correct connections.

LUBRICATION SYSTEM

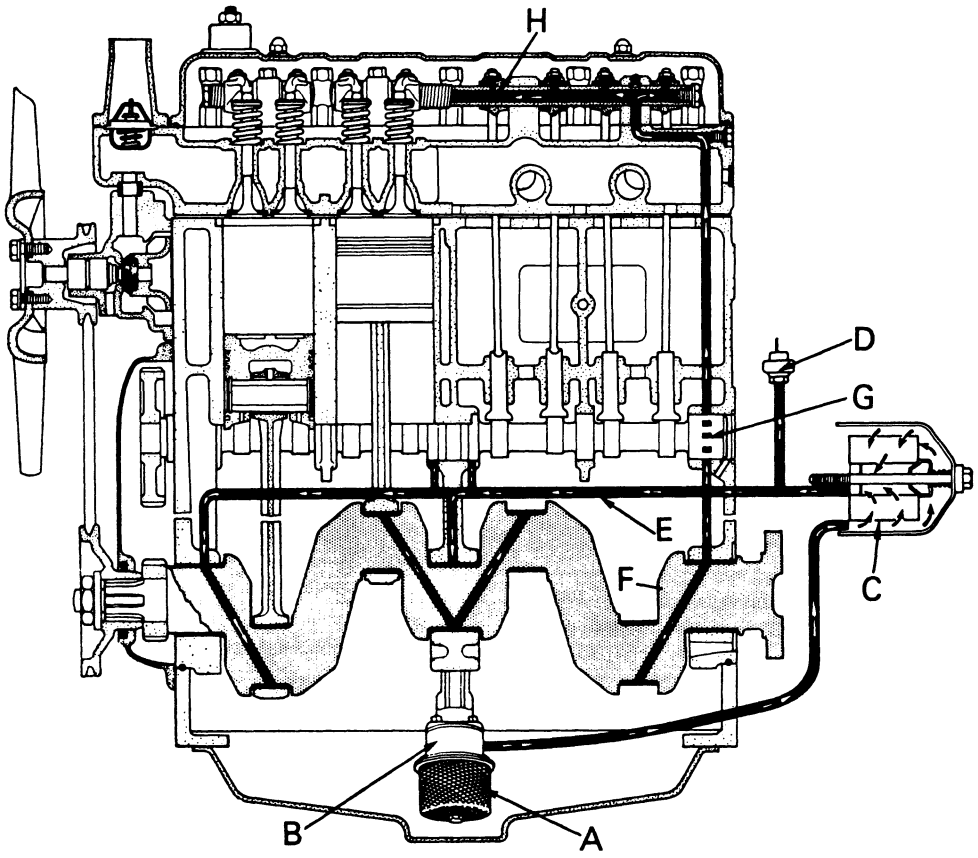

Figure 44. LUBRICATION SYSTEM

A. Inlet gauze
B. Oil pump
C. Filter
D. Warning light switch
E. Oil gallery
F. Crankshaft oil passage
G. Camshaft rear bearing
H. Valve rocker shaft

Engine Lubrication

Oil is drawn from the sump by the gear-driven rotary oil pump and delivered under pressure to the oil filter. After filtration the oil passes to the main oil gallery in the cylinder block and so, via oilways in the block webs, to the crankshaft main journals and then on, through further oilways in the cylinder block, to pressure lubricate the camshaft bearings. The big-end bearings are lubricated by drillings in the crankshaft webs.

The rocker shaft and valve rockers are intermittently fed with oil from the camshaft rear bearing through oilways in block and head and an external connecting pipe. The camshaft is drilled off-centre so that the oilways are connected only once in each revolution. (Fig. 44.) The oil lubricates the tappets and push rods as it returns to the sump.

The intermediate gear is pressure fed via its hollow shaft and an oil-way in the cylinder block. Surplus oil in the timing cover forms an oil bath which splash lubricates the timing gears.

A full-flow oil filter is mounted on the left-hand side of the cylinder block. The filter incorporates a by-pass valve so that if the pressure difference between the filter inlet and outlet exceeds 10 lb/sq in. the valve opens and allows oil to by-pass the element and flow straight into the oil gallery. The engine is not, therefore, starved of oil if the element is allowed to become choked, but it is supplied with unfiltered oil. The replaceable paper element should be renewed at the intervals specified on Page 2. A new element should also be fitted when an engine is overhauled and also if a cylinder head gasket fails. If engine oil and filter element are not changed when a failed cylinder head gasket is replaced, any water which has leaked into sump will cause the paper filter element to swell and fail to pass oil. (Fig. 45.)

Do not attempt to clean a filter element.

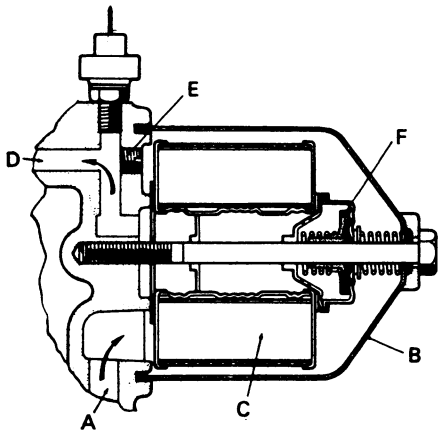

Figure 45. SECTION THROUGH OIL FILTER

A. Oil feed from pump B. Bowl C. Element
D. Outlet to oil gallery E. Plug F. By-pass valve

● *OPERATION E1*

Engine Oil Filter: Drain oil, whilst engine is warm, and remove filter bowl. Discard oil filter element and clean bowl with diesel fuel, using a brush to ensure that by-pass valve is very clean. Remove sealing ring from groove on cylinder block and fit new ring supplied with element. Carefully fit new ring into block groove, ensuring that it is not twisted or distorted and fits neatly all way round groove. Fit new element into bowl and replace bowl. Do not overtighten bowl securing bolt: a tightening torque of 10 lb ft (1·4 kg metres) is sufficient.

Refill sump with new oil, start engine to fill filter and check that it is oil-tight, then recheck oil level.

Oil Pump

The gear type oil pump is located in the engine sump and contains a relief valve which is set to open at 45 lb/sq. in. (31·6 kg/sq. cm).

● *OPERATION E2a*

Oil Pump Screen: Drain engine oil whilst warm and remove sump. Remove setscrew attaching filter screen to pump and withdraw filter. Wash screen in clean diesel fuel and clean with air blast. Do not wipe with cloth. Refit screen, replace sump, using new gasket, and refill with new oil. (Fig. 46.)

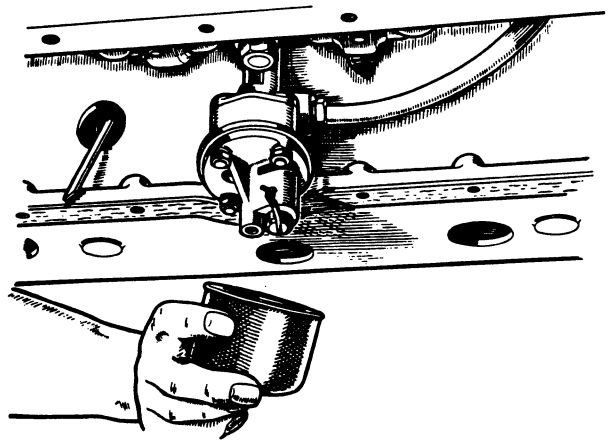

Figure 46. REMOVING OIL PUMP SCREEN

● *OPERATION E3*

Pump Removal

1. Drain engine oil and remove sump.
2. Disconnect outlet pipe from pump to cylinder block. (Fig. 47.)

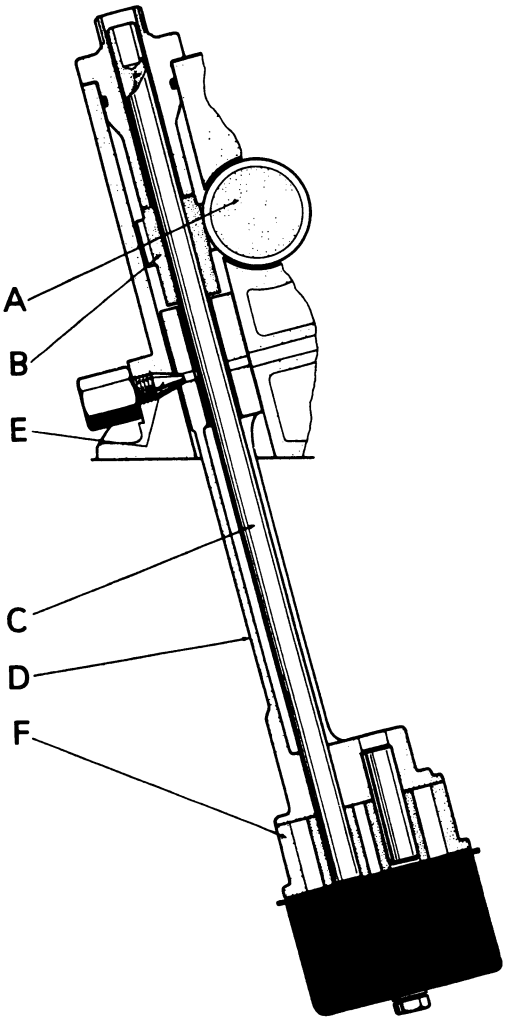

Figure 47. OIL PUMP DRIVE

A. Camshaft B. Spiral pinion C. Driveshaft
D. Pump bracket E. Locating screw F. Pump body

3. Disconnect the tractormeter cable.
4. Release locknut and remove pump locating screw, which is situated on the right-hand side of block, and withdraw pump downwards.

The oil pump must be dismantled to check rotor wear and the condition of the upper bearing.

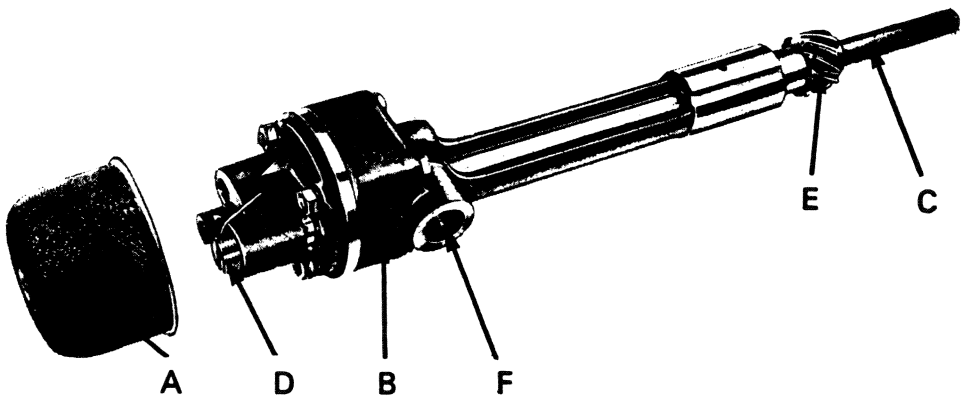

Figure 48. LUBRICATING OIL PUMP

A. Oil inlet gauze
B. Pump body
C. Driveshaft
D. Relief valve screw
E. Spiral pinion
F. Oil outlet connection

To Replace the Pump

Reverse the removal procedure. Coat the locating screw with Wellseal, or a similar jointing compound, screw tightly into the cylinder block then tighten locknut.

● *OPERATION E3a*

To Dismantle Pump

1. Remove the two setscrews and two bolts securing pump cover, noting that the two bolts are special locating bolts and must be fitted in their correct places when reassembling. (Fig. 48.)
2. Remove cover, complete with relief valve, and filter.
3. Check backlash between rotors — this should be 0·020 to 0·026 in. (0·51 to 0·66 mm).
4. Remove driven rotor and shaft.
5. Use a drift to force driving shaft from driving rotor.
6. Check rotor and housing dimensions.
   Rotor width: 1·1865 – 1·1855 in. (30·13 – 30·11 mm)
   Housing depth: 1·1890 – 1·1875 in. (30·19 – 30·16 mm)
   Rotor side clearance: 0·001 – 0·0035 in. (0·025 – 0·089 mm)
   If end-float is excessive but backlash is within limits and the rotors are not worn, it is permissible to grind the face of the housing to reduce end-float. If the rotors are damaged, both gears should be replaced. Never replace one rotor only.
7. Check the upper bearing for wear.
   Bush internal diameter: 0·4905 – 0·4925 in. (12·46 – 12·51 mm)
   Shaft diameter: 0·4895 – 0·490 in. (12·43 – 12·45 mm)
   Clearance: 0·0005 – 0·003 in. (0·02 – 0·08 mm)

If wear is excessive, remove the bush and replace using Service Tool 901701 as detailed below:

1. Slip special pilot bush B through slot in pump bracket to locate in driveshaft bush.
2. Stand pump bracket on a suitable hollow anvil or press base.
3. Place drift A in position.
4. Drive or press out pump bracket bush.

To replace the new bush:

1. Place new bush on the replacer drift C.
2. Push centraliser D over new bush and drift C until oil-hole in bush just shows at bottom edge of centraliser, ensuring that the oil-holes in bush and bracket are in line.
3. Start new bush in pump bracket and slide off centraliser, ensuring that the oil-holes in bush and bracket are in line.

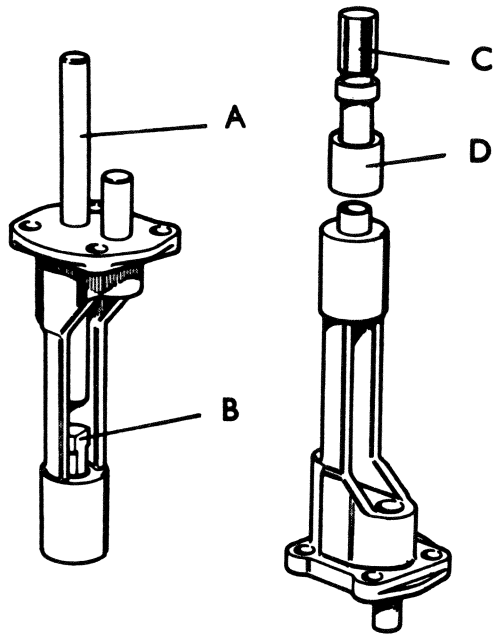

Figure 49. REPLACING OIL PUMP BRACKET BUSH (Using Service Tool 901701)

A. Long drift
B. Pilot
C. Replacer drift
D. Centraliser guide

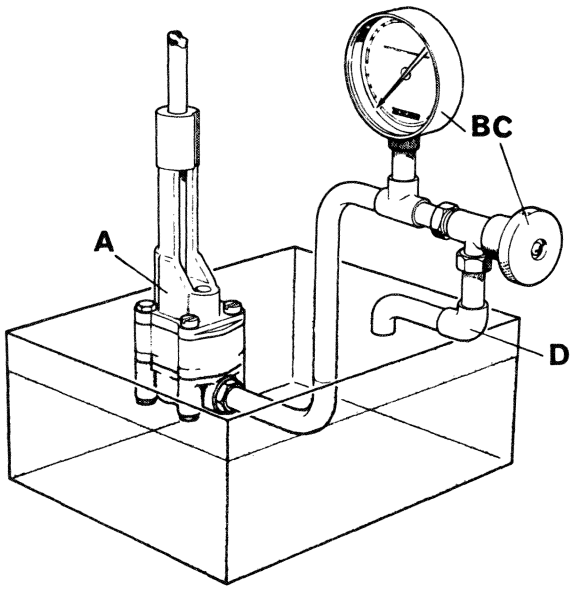

Figure 50. OIL PUMP TEST RIG

A. Oil pump B. Pressure gauge C. Shut-off valve
D. Swivelling outlet

4. Stand the pump bracket on a flat anvil or press base; drive or press C until it butts firmly against D. The bush is now in its correct position in pump bracket. The driven rotor shaft may be removed using drift A.

Relief Valve

If the valve is to be removed for cleaning purposes take note how many threads are showing above the locknut before removal. This is necessary so that the valve may be set in its original setting if a test rig is not available

Approximate figures to use as a guide when setting the valve are: four threads showing above locknut give approximately 45 lb/in.^{2}; one full turn produces a 6 lb/in.^{2} variation in pressure.

To check the pressure, the oil pressure warning switch should be removed and a gauge fitted into the $\frac{1}{8}$ BSP hole in the cylinder block.

If a test rig is available the following procedure should be adopted (Fig. 50):

1. Use Shell Fortisal 5W at room temperature of 20°C (68°F) or 20/20W at 46°C (115°F), which is equivalent to hot engine oil.
2. Pump to be driven at 750 rev/min or 330 rev/min.
3 Relief valve set to open at 45 lb/sq. in. (3·1 kg/sq. cm)
4. Pump flow at 20 lb/sq. in. should be 19·2 pints/min (10·9 litres/min) at 750 rev/min and 8·4 pints/min (4·7 litres/min) at 330 rev/min. Delivery in pints/min = $\frac{480}{\text{time in seconds for one gallon to flow.}}$

Maximum time for one gallon should be:
25 seconds at 750 rev/min.
57 seconds at 330 rev/min.

Oil Warning Light

The green oil warning light on the instrument panel is earthed by a switch in the cylinder block and when the switch opens the light is extinguished. The switch is connected into the main oil gallery and should open at 9 to 13 lb/sq. in. (0·6 to 0·9 kg/sq. cm) but if not, it must be replaced as the switch is not adjustable. If incorrect oil pressure is suspected the oil switch can be removed and a pressure gauge connected into the cylinder block, which is threaded $\frac{1}{8}$ BSP, so that the actual oil pressure will be shown when the engine is started.

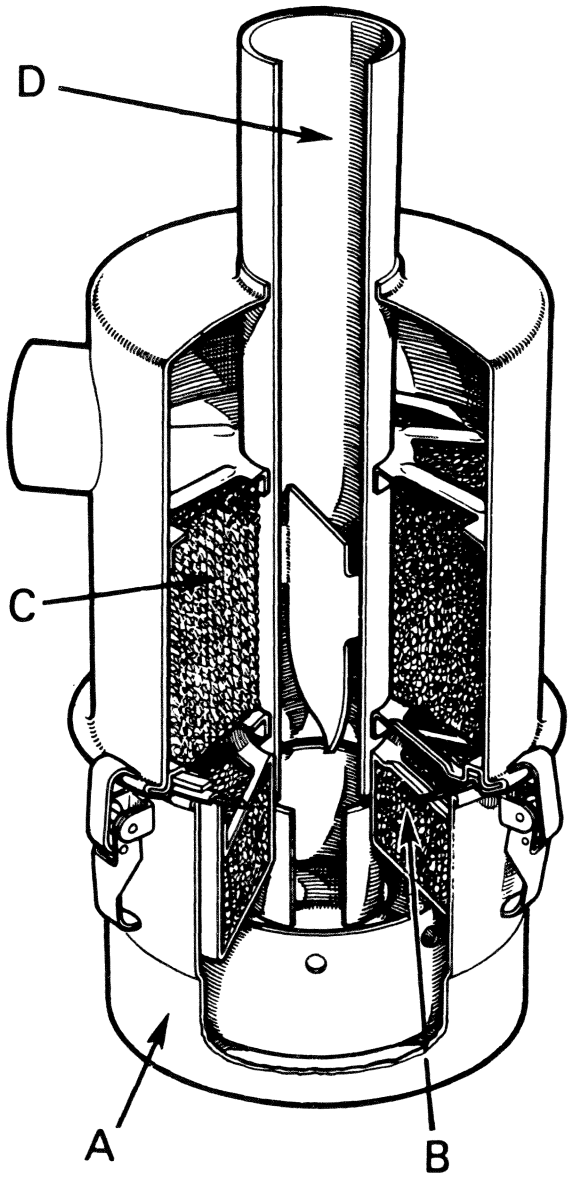

Figure 51. OIL BATH AIR CLEANER

A. Bowl B. Removable element
C Fixed element D. Inlet pipe

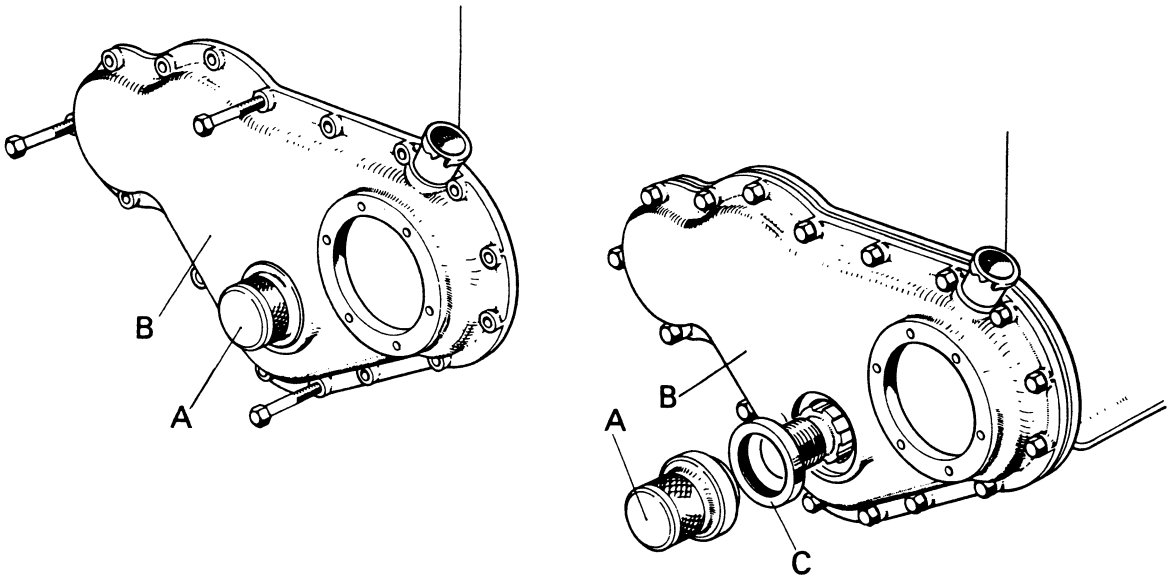

Figure 52. FITTING TIMING COVER AND OIL SEAL

A. Service Tool 962560 B. Timing cover C. Oil seal

● *OPERATION F3*

Air Cleaner: Remove cleaner bowl, empty oil bath and wash all sediment from bottom of bowl. (Fig. 51.)

Remove detachable wire mesh element from cleaner body, wash in clean diesel fuel and allow to stand until all fuel has drained off.

Replenish oil bath with *new* oil, taking care not to overfill bowl. Only fill to the level mark — not above or below it. An SAE 30 grade of straight mineral oil can be used in the air cleaner. This oil is less susceptible to frothing — and usually cheaper — than the detergent oils used in the engine. In climates where the ambient temperature often exceeds 32°C (90° F) an SAE 50 grade of oil may be used.

Before assembling air cleaner, thoroughly clean inside of pre-cleaner and inside of pipe through centre of air cleaner. Ensure that the rubber ring between cleaner body and bowl makes a good seal: leakage at this point will allow unfiltered air to enter engine.

● *OPERATION G1*

Timing Cover: This is bolted to front end cylinder block and may be removed after removing fan belt and crankshaft pulley.

Refitting Timing Cover: Replace cover without seal and fit Service Tool 962560 over crankshaft so that it enters seal location and positions it centrally round crankshaft. Bolt cover in position then withdraw tool and use spigot end of tool to push seal into position in cover, ensuring that seal is positioned with lip facing inside of cover. (Fig. 52.)

When refitting early covers located by dowels, remove the dowels and use tool to centralise cover.

● *OPERATION G1a*

Timing Cover Oil Seal: A seal is fitted to prevent oil leakage from timing case, and if oil leaks from behind crankshaft pulley the seal should be renewed.

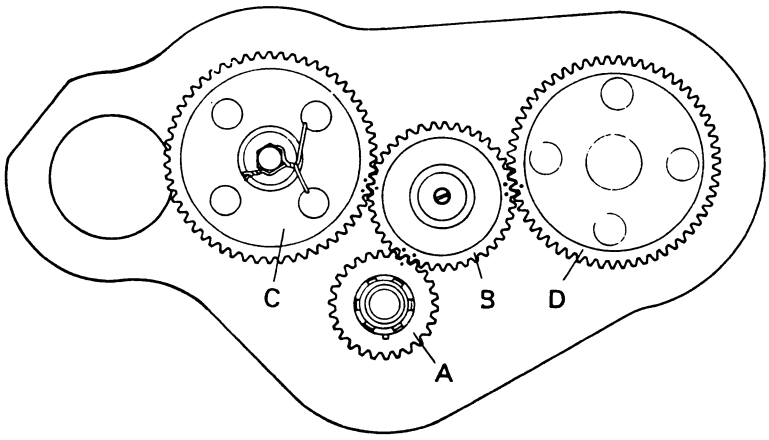

Figure 53. TIMING GEAR MARKING

A. Crankshaft gear
B. Intermediate gear
C. Camshaft gear
D. Injection pump gear.

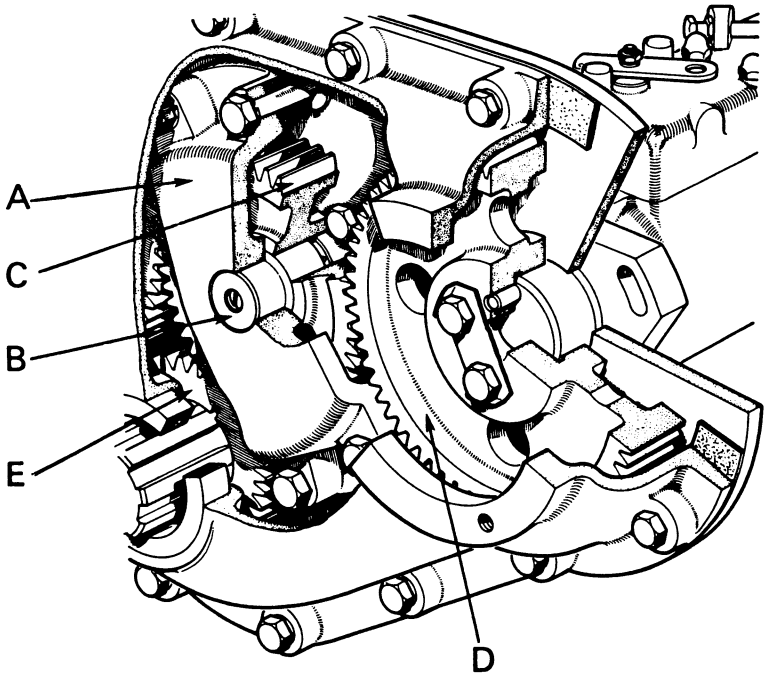

Figure 54.

INTERMEDIATE GEAR

A. Bracket
B. Shaft
C. Intermediate gear
D. Injection pump gear.
E. Crankshaft gear

Lever out old oil seal, taking care not to distort cover pressing, but do not press new seal into cover until cover has been refitted on engine.

● *OPERATION G3*

Timing Gears: These are accessible when the cover is removed, and before disturbing the gears turn engine until gear marks are aligned as shown in Fig. 53.

Do not turn crankshaft or camshaft when a gear is removed, or if gears are incorrectly meshed, otherwise damage may be caused by valve heads fouling pistons.

Camshaft gear is keyed on a parallel shaft and may be withdrawn after removing central bolt: do not remove the three setscrews visible through holes in gear — these attach locating plate and if removed will allow camshaft to move forward and jam against tappets. If gear is tight use an extractor such as Service Tool 960901. Do not attempt to remove gear by striking end of camshaft with a hammer.

Intermediate gear may be removed after removing support bracket. Take care of shims fitted between housing and carrier plate as these must be replaced.

● *OPERATION G3b*

Intermediate gear shaft is a push-fit in cylinder block and if tight can be removed by cutting the head of a $\frac{5}{16}$ UNC bolt and threading the bolt shank $\frac{5}{16}$ BSF. The UNC thread can then be screwed into shaft plughole and the BSF thread screwed into slide hammer, Service Tool 4235A. (Fig. 54.)

Injection Pump Drive Gear: On 1200 engines the gear is keyed on a taper shaft and retained by a single nut. On 990 engines the gear is dowelled on a parallel shaft and retained by three bolts. Remove gear from pump shaft by using an extractor in the cored holes in gear. Do not attempt to remove gear by hammering end of pump shaft.

Crankshaft Gear: This is keyed on to shaft and should not be removed unless it is to be renewed. Using Service Tool 960604 unscrew the extractor bolt so that when the tool is placed over end of crankshaft, body of tool touches face of gear. Place the two halves of split ring over gear and, whilst holding split ring against body, tighten extractor screw so that split ring is gripped by chamfer on body shoulder and gear is drawn off shaft. (Fig. 55.)

Assembling Timing Gears: If intermediate gear spindle has been removed from cylinder block, ensure that oilway is clear of sludge and a plug is fitted in

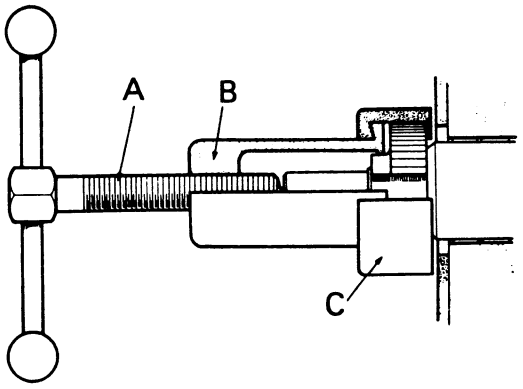

Figure 55.
CRANKSHAFT GEAR REMOVER — 960604

A. Extractor screw B. Body
C. Split ring

each end of spindle. Smear plugs with Loctite then screw tightly into spindle.

Clean spindle then push into cylinder block. Smear intermediate gear bore with anti-scuffing paste before placing gear on spindle: teeth marking on gear aligned with marks on crankshaft gear. Refit shaft bracket, replacing the shims between bracket and carrier plate. Tighten bracket bolts then check that gear has 0·002 to 0·004 in. (0·05 to 0·10 mm) end-float and if necessary remove bracket and add, or remove, shims to obtain correct end-float. Ensure that an equal thickness of shims is fitted under each end of bracket — otherwise bracket will be distorted — and bolts are fully tightened.

Ensure that camshaft key is in position then replace gear, aligning teeth marking with marks on intermediate gear. Replace the retaining bolt *fitted with the thick washer.* Tighten bolt to 40 lb ft (5·5 kg metres) then lock with wire. Loop wire through holes in gear then cross ends before passing through bolt-hole, so that bolt cannot work loose.

Replace injection pump gear, ensuring that key is in pump shaft (1200) or dowel is in gear (990) before fitting gear. Tighten retaining nut on 1200 pump and the three bolts on 990. After firmly tightening bolts on 990, bend corners of tabwasher against bolt heads.

Before refitting timing cover check that all gear markings are correctly aligned as shown in Fig. 53.

COOLING SYSTEM

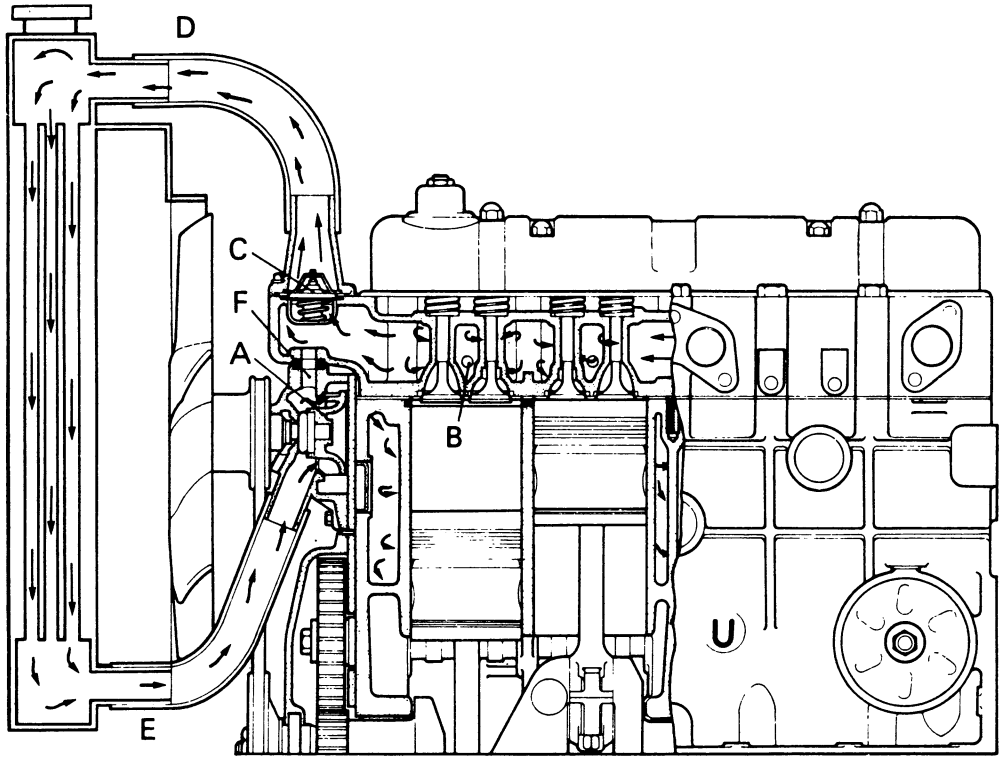

Figure 56. COOLING SYSTEM

A. Pump impeller B. Jets to valve ports C. Thermostat D. Radiator inlet
E. Radiator outlet F. By-pass connection

Operation

Cool water is drawn into water pump from bottom of radiator and is then pumped through a passage in cylinder block into cylinder head, where it is directed in jets on to the injector bosses and valve ports. Water in cylinder head is able to pass, by thermsiphon, through passages in cylinder block to cool the cylinders. Hot water returns from cylinder head to top of radiator through a thermostat which opens and closes according to water temperature. (Fig. 56.)

When water passing out of cylinder head is cold the thermostat is closed and water cannot pass into radiator but returns to inlet side of water pump, via the by-pass connection, and is then re-circulated through cylinder head. As water temperature rises the thermostat commences to open and allows hot water to pass into top of radiator.

The thermostat therefore ensures that the engine warms up rapidly and runs at a satisfactory working temperature by automatically controlling the flow of water through radiator.

Anti-Freeze: In climates where the temperature falls below freezing point it is essential that the tractor cooling system is protected against frost damage. A proprietary anti-freeze mixture, of sufficient strength to withstand the lowest temperature likely to be encountered, should be used. *Ensure that the anti-freeze is specially formulated for use in diesel engines and follow the manufacturer's instructions very carefully.*

All tractors despatched from the factory fully assembled are filled with anti-freeze mixture. This anti-freeze is of similar specification and at least equal in properties to the "permanent" anti-freeze used in the U.S.A. and Canada, although we do not recommend that any anti-freeze should be regarded as having more than a two-year life. The mixture used complies with BS 3152: 1959, Type B, and will mix with ethylene glycol anti-freeze with a benzoate/nitrite type inhibitor for "topping up" purposes. *Anti-freeze mixtures with borate or mercaptol type inhibitors should NOT be used for "topping up" tractors filled with anti-freeze mixture at the factory.*

Thermostat: The thermostat is positioned in the cylinder head water outlet. If engine does not reach working temperature, or if it boils, drain cooling system and remove thermostat. Place thermostat in cold water together with an accurate thermometer. Heat the water and as the temperature rises note

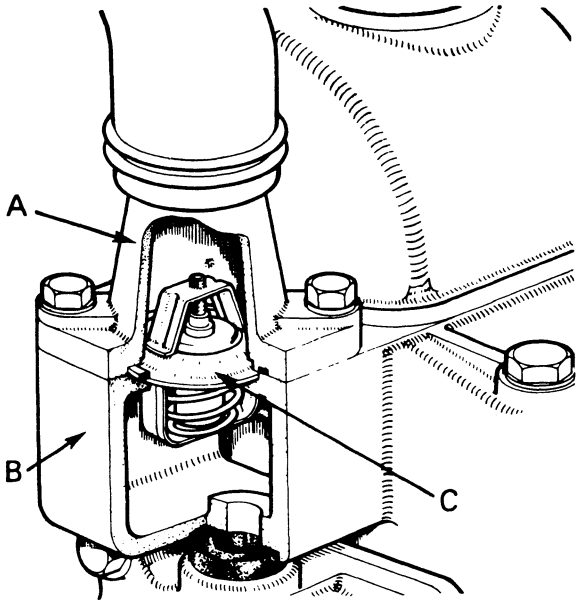

Figure 57. THERMOSTAT

A. Water outlet pipe B. Cylinder head
C Thermostat

when the thermostat starts opening; this should be 174°–183° F (79°–84° C) and at 200° F (94° C) it should be fully open. If a thermometer is not available, place the thermostat in boiling water, when it should be fully open in 60 to 90 seconds. (Fig. 57.)

Renew the thermostat if it does not operate correctly. Do not attempt to adjust it and do not operate an engine without a thermostat. An engine without a thermostat in the cooling system will wear excessively due to being overcooled.

● *OPERATION H6*

Water Pump Removal:

1. Remove bonnet and drain cooling system.
2. Disconnect radiator pipes and remove radiator. On 1200 Tractors fitted with two-blade fan it is not necessary to remove radiator in order to remove water pump, but on tractors with a seven-blade fan the radiator must be removed.
3. Remove fan. Release dynamo mounting bolts and remove fan belt.
4. Remove bolts attaching pump body to cylinder block. Pivot pump body downwards until by-pass connection is clear of head then remove pump.

Refitting Water Pump: Refit pump in reverse order of removal, noting the following:

1. Examine core plug in front of cylinder block and fit new plug if there are any signs of leakage.
2. Fit new gaskets and seals, etc. Ensure that 'O' ring is fitted in recess at back of support plate.
3. If a two-blade fan is fitted ensure that flat washers are fitted under the bolt heads.

Water Pump Gland: The pump shaft is sealed by a gland seal in the impeller. This seal is spring-loaded, so that it is held in contact with pump body and faced with carbon to minimise wear; no attention is therefore required, and if the seal leaks the pump must be removed and seal renewed. The pump body has a drain hole under the bearing boss and if water drips out it is an indication that the gland is leaking.

Water Pump Bearing: The pump spindle runs on a double-row ball bearing. This is pre-packed with lubricant and does not require further attention. Renew bearing if it feels rough or dry.

● *OPERATION H6a*

Fitting a New Seal or Bearing: Remove pulley from spindle, using a suitable extractor, or press, so that the bearing locating screw can be removed. Place pump, impeller upwards, on the bed of a press and support body with suitable packings. Press spindle out of pump, taking care not to damage impeller or pump body, then lift impeller out of body and prise seal from recess in impeller. Renew impeller if corroded or damaged and renew bearing if any signs of roughness are apparent. Examine pump body: the seal contact face must be very smooth and free from any score-marks. (Fig. 58.)

Carefully press seal into impeller, using a little soapy water as lubricant, until seal touches end of impeller. Take care not to cut or damage seal and when in position smear seal contact faces with anti-scuffing paste to prevent it sticking to pump body.

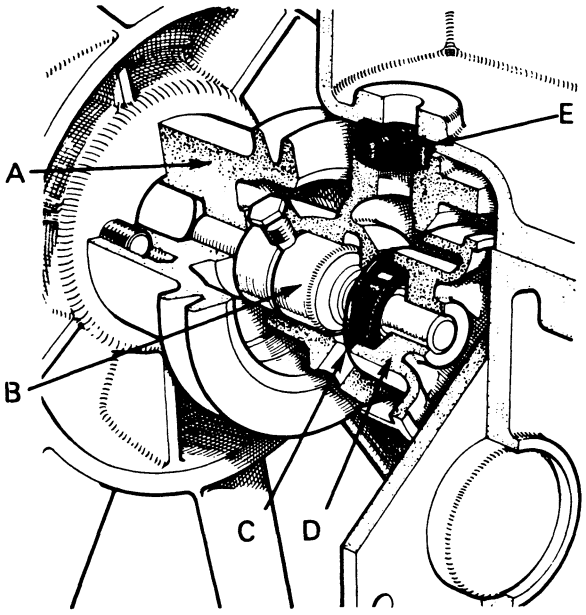

Figure 58. WATER PUMP

A. Pulley B. Bearing and spindle
C. Gland seal D. Impeller
E. By-pass seal

Position locating hole in bearing in line with screw-hole in pump body, then push bearing into position and fit locating screw. Lock locating screw with tabwasher when tight.

Support impeller end of spindle on a wooden block and press pulley on to spindle until end of pulley bore is level with end of spindle. Do not hammer the pulley on to the spindle and ensure pump is supported under impeller end of spindle and not under pump body.

Turn pump over and place a piece of $\frac{7}{8}$ in. (22 mm) diameter bar inside pulley recess — so that thrust is taken on end of spindle and does not push pulley further on to spindle — then carefully press impeller into place. Ensure gland seal is not damaged when fitting impeller, and press impeller on to spindle until clearance between tips of impeller blades and pump body is reduced to 0·005 in. (0·13 mm). Check that only the slight drag of seal can be felt when pulley is rotated.

DIMENSIONAL DATA

Torque Figures

Big-end bearing nuts	50 lb ft	6·92 kg metres
Breather filter cover nut	10 lb ft	1·38 kg metres
Camshaft gear bolt	40 lb ft	5·53 kg metres
Camshaft locating plate bolts	25 lb ft	3·46 kg metres
Carrier plate to cylinder block bolts	25 lb ft	3·46 kg metres
Clutch housing to main frame bolts	75 lb ft	10·5 kg metres
Crankshaft pulley nut	140 lb ft	19·3 kg metres
Cylinder block to main frame bolts	30 lb ft	4·15 kg metres
Cylinder head nuts and bolts	90 lb ft	12·4 kg metres
Cylinder head studs into block	25 lb ft	3·46 kg metres
Fan blade bolts	25 lb ft	3·46 kg metres
Flywheel nuts	50 lb ft	6·92 kg metres
Front extension to main frame bolts	65 lb ft	8·98 kg metres
Injection pump gear bolts (990)	20 lb ft	2·77 kg metres
Injection pump gear nut (1200)	45 lb ft	6·22 kg metres
Intermediate gear bracket bolts	45 lb ft	6·22 kg metres
Main bearing cap bolts	160 lb ft	22·12 kg metres
Main frame to engine bolts	30 lb ft	4·14 kg metres
Main frame to flywheel housing bolts	75 lb ft	10·5 kg metres
Oil filter bowl bolt	10 lb ft	1·38 kg metres
Sump to main frame bolts	20 lb ft	2·76 kg metres
Valve rocker adjusting nuts	14 lb ft	1·94 kg metres

The following figures apply to bolts of standard material with either coarse (UNC) or fine (UNF) threads and may be used for all bolts and nuts not listed in the previous table.

Thread Diameter	Torque	
$\frac{1}{4}$ in	7 lb ft	0·97 kg metres
$\frac{5}{16}$ in	15 lb ft	2·07 kg metres
$\frac{3}{8}$ in	25 lb ft	3·46 kg metres
$\frac{7}{16}$ in	45 lb ft	6·22 kg metres
$\frac{1}{2}$ in	65 lb ft	8·98 kg metres
$\frac{5}{8}$ in	110 lb ft	15·2 kg metres
$\frac{3}{4}$ in	140 lb ft	19·3 kg metres

Capacities

Cooling system	3 gal	13·6 litres
Engine lubricating oil	13 pints	7·4 litres
Steering-box oil (990)	2 pints	1·1 litres
Steering-box oil (1200)	5 pints	2·8 litres
Air-cleaner oil bath (990)	1¼ pints	0·7 litres

Air-cleaner oil bath (1200)	1½ pints	0·85 litres
Fuel tank (990)	13½ gal	61·4 litres
Fuel tank (1200)	18 gal	81·7 litres
Transmission oil (990)	5 gal	22·7 litres
Transmission oil (1200)	9 gal	41·0 litres

Wear Limits

The following figures are only intended to serve as a guide to determine when a component should be renewed:

Crankshaft big-end journals should be reground if ovality exceeds 0·005 in (0·127 mm).

Crankshaft main-bearing journals should be reground if wear exceeds 0·005 in (0·127 mm).

Crankshaft end-float should not exceed 0·015 in. (0·38 mm).

Piston rings should be replaced if ring gap exceeds 0·060 in (1·524 mm) when checked in unworn part of cylinder.

When there is evidence of ring and slight bore wear causing oil consumption, fit oil control rings. These should control oil consumption if bore wear is not greater than 0·010 in. (0·25 mm) and are available to suit either standard or oversize bores. If oil consumption exists and oil control rings have already been fitted it will be necessary to rebore the cylinder block and fit oversize pistons.

Piston groove clearance should not exceed 0·005 in. (0·13 mm) when checked with a new ring.

Oversize valves should be fitted if bore in cylinder head is worn in excess of 0·006 in. (0·15 mm).

Valve Clearance (set cold)

All inlet valves	0·010 in	0·25 mm
Exhaust valves with stem end caps	0·007 in	0·18 mm
Exhaust valves without stem end caps	0·010 in	0·25 mm

Valve Springs

Inlet (yellow spot)		
Free length	2·127 in	54·02 mm
Length at 77 lb load	1·148 in	
Length at 35 kg load		29·16 mm
Exhaust (blue spot)		
Free length	2·132 in	54·15 mm
Length at 82 lb load	1·180 in	
Length at 37 kg load		29·97 mm

Valve Stem Diameters (inlet and exhaust)

Standard	0·3732 — 0·3722 in	9·479 — 9·454 mm
Oversize 0·010 in. (0·007 mm)	0·3832 — 0·3822 in	9·733 — 9·708 mm
Oversize 0·020 in. (0·014 mm)	0·3932 — 0·3922 in	9·987 — 9·962 mm
Valve seat angle	45°	45°
Valve guide bore	0·375 — 0·374 in	9·525 — 9·499 mm
Valve tappet diameter	0·624 — 0·623 in	15·850 — 15·824 mm

Valve Seat Insert Counterbore Diameter (inlet and exhaust)

990	1·625 — 1·626 in	41·27 — 41·30 mm
1200 AD4/55A/4913 onward	1·625 — 1·626 in	41·27 — 41·30 mm
1200 AD4/55A/1001 to 4912	1·5615 — 1·5635 in	39·66 — 39·71 mm

Seat Insert Interference Fit in Cylinder Head Counterbore

Inlet and exhaust	0·004 — 0·006 in	0·10 — 0·15 mm

Valve Timing

Inlet opens	8° before top dead centre
Inlet closes	38° after bottom dead centre
Exhaust opens	36° before bottom dead centre
Exhaust closes	10° after top dead centre

Rocker Shaft

Diameter	0·748 — 0·749 in	18·99 — 19·02 mm
Bush bore reamed in position	0·7500 — 0·7505 in	19·05 — 19·06 mm

Crankshaft

Main journal diameter		
Standard size	2·4995 — 2·4990 in	63·487 — 63·474 mm
Undersize 0·010 in (0·254 mm)	2·4895 — 2·4890 in	63·233 — 63·220 mm
Undersize 0·020 in (0·508 mm)	2·4795 — 2·4790 in	62·979 — 62·966 mm
Undersize 0·030 in (0·762 mm)	2·4695 — 2·4690 in	62·725 — 62·712 mm

When regrinding crankshaft it is important that the original journal fillet radius is maintained. It is also important that the surface of the radius is as smooth as the surface of the journal and that the radius is smoothly blended into both surfaces. A fillet that is incorrectly radiused, roughly finished or not smoothly blended, weakens a shaft and may cause fatigue failure during service.

Big-end journal diameter		
Standard size	2·3735 — 2·3730 in	60·29 — 60·28 mm
Undersize 0·010 in	2·3635 — 2·3630 in	60·04 — 60·03 mm
Undersize 0·020 in	2·3535 — 2·3530 in	59·78 — 59·77 mm
Undersize 0·030 in	2·3435 — 2·3430 in	59·52 — 59·51 mm
Centre journal width		
Standard size	2·126 — 2·124 in	54·00 — 53·95 mm
Oversize 0·010 in	2·136 — 2·134 in	54·254 — 54·204 mm
Oversize 0·040 in	2·166 — 2·164 in	55·270 — 55·220 mm
Bearing fillet radius	0·16 — 0·15 in	4·06 — 3·81 mm
Big-end bearing clearance	0·0015 — 0·0025 in	0·038 — 0·063 mm
Main bearing clearance	0·002 — 0·004 in	0·051 — 0·102 mm
End-float of crankshaft	0·002 — 0·010 in	0·051 — 0·258 mm
Thrust washer thickness		
Standard	0·091 — 0·093 in	2·3114 — 2·3622 mm
Oversize 0·005 in (0·127 mm)	0·096 — 0·098 in	2·4384 — 2·4892 mm
Oversize 0·020 in (0·508 mm)	0·111 — 0·113 in	2·8194 — 2·8702 mm

Connecting Rod Alignment

Maximum out of parallel	0·0005 in/in	0·0127 mm/cm
Maximum twist	0·0005 in/in	0·0127 mm/cm
Maximum weight variation in set of four rods	0·25 oz	7·1 gm

Piston Dimensions (new)

Height (990)	4·406 in	111·9 mm
Height (1200)	4·156 in	105·6 mm
Nominal diameter	3 $\frac{15}{16}$ in	100 mm
Piston skirt diameter (at right-angles to gudgeon pin bore)	3·9323 — 3·9315 in	99·9 — 99·8 mm
Piston ring side clearance	0·002 — 0·0035 in	0·050 — 0·088 mm
Piston ring gap	0·011 — 0·016 in	0·28 — 0·41 mm
Gudgeon pin diameter	1·2503 — 1·250 in	31·757 — 31·750 mm

(Push-fit in connecting rod bush, light-drive fit in piston)

Bore Dimensions (new)

Standard	3·9396 — 3·9388 in	100·07 — 99·76 mm
Oversize, 0·020 in	3·9596 — 3·9588 in	100·58 — 100·33 mm
Oversize, 0·040 in	3·9796 — 3·9788 in	101·09 — 100·86 mm

Sealing Ring (internal diameter) bore

Standard	3·942 — 3·944 in	100·13 — 100·18 mm
Oversize, 0·020 in	3·962 — 3·964 in	100·63 — 100·68 mm
Oversize, 0·040 in	3·982 — 3·984 in	101·14 — 101·19 mm

Fuel System

Injector setting pressure .. .. .. 175 atmospheres (180 kg/cm²)

Spill timing (static) 1200 (4/55) .. .. .. 25° before top dead centre
990 (4/49) .. .. .. 17° „ „ „ „

Spill timing mark: Pump flange and engine mounting flange are marked, and correct pump timing is obtained when these marks are in alignment.

Spill timing adjustment: Elongated holes in the injection pump mounting flange permit the pump body to be rotated when the three securing nuts are released.

Injection Pump Flange Marking

1200 (4/55)	11° from keyway when at point of injection
990 (4/49)	66° from keyway when at point of injection

Injection Pump Fuel Setting

990		10·4 — 10·6 cc per 200 shots at 850 rev/min
1200	AD4/55A/4913 onward	13·0 — 13·2 cc per 200 shots at 800 rev/min
	AD4/55A/1001 to 4912	11·8 — 12·0 cc per 200 shots at 800 rev/min

Injector Nozzle Hole Diameter

990 and 1200 .. .. 0·28 — 0·30 mm

Injection Pump and Injectors

Pumps	Holder	Nozzle
990 — CAV DPA 32488207 1200 — Simms SPGE LM805250/1150	BKBL 97S5152	BDLL 140S6417

Oil Pump

Spindle diameter	0·4895 — 0·490 in	12·43 — 12·45 mm
Spindle bush bore	0·4905 — 0·4925 in	12·458 — 12·509 mm
Rotor width	1·1865 — 1·1855 in	30·137 — 30·112 mm
Housing depth	1·1890 — 1·1875 in	30·191 — 30·162 mm
End float	0·001 — 0·0035 in	0·025 — 0·088 mm
Pump rotor backlash	0·020 — 0·026 in	0·511 — 0·66 mm

Camshaft Journal Diameters

Front	1·872 — 1·870 in	47·55 — 47·50 mm
No. 2	1·827 — 1·825 in	46·41 — 46·35 mm
Nos. 3 and 4	1·811 — 1·810 in	46·00 — 45·97 mm
No. 5	1·765 — 1·763 in	44·83 — 44·78 mm
No. 6	1·749 — 1·747 in	44·42 — 44·37 mm
Camshaft thrust washer thickness	0·245 — 0·240 in	6·223 — 6·096 mm
Camshaft end-float	0·010 — 0·020 in	0·254 — 0·508 mm

SUMMARY OF DESIGN CHANGES

Details of change	When introduced
Rear main bearing oil retainer changed from scroll type to positive contact seal. The new retainer (962319) incorporates asbestos packings (921611) and is interchangeable with the scroll type retainer (908398).	AD4/55/4570 (November 1967)
High-lift camshaft and larger diameter valves introduced, with corresponding changes to cylinder head, valve gear, pistons and fuel injection pump delivery, etc.	AD4/55/4913 (January 1968)
Cored holes in injection pump drive gear repositioned to facilitate use of gear extractor. Part number of gear, 912486, unchanged.	AD4/55/5332 (January 1968)
Material of carrier plate gasket changed from manila to Oakenstrong. Part number, 902301, unchanged although internal shape of gasket has been altered.	AD4/55/2021 (March 1968)
Pressed steel timing cover (915071) changed to aluminium cover (920957), incorporating engine oil filler. Previous oil filler in main frame deleted.	AD4/55/5917 (January 1968)
Bleed pipe (907037) fitted, connecting fuel filter to leak-off pipe. Part number of leak-off pipe changed from 917223 to 923667.	1200/705005 (February 1968)
Radiator core changed from honeycomb to gilled tube construction and metal two-blade fan changed to nylon seven-blade fan.	1200/705365 (March 1968)
Engine oil dipstick fitted with cup type shield, to prevent any ingress of water into sump. Part number of dipstick changed from 923944 to 924375.	1200/706078 (July 1968)
Plate (924397) fitted in timing cover so that injection pump can be removed without removing timing cover. Part number of cover changed from 920957 to 924396.	AD4/55A/7457 AD4/55B/1011 449001/5114 449002/1796 449005/1183 (August 1968)
Cylinder block core plugs (17192) changed to cup type plugs (623797). Part number of cylinder block unchanged, but as plug aperture machining has been changed the plugs are not interchangeable.	AD4/55A/9861 AD4/55B/1011 449001/11079 449002/2450 449005/1418 (April 1969)
Crankshaft pulley washer (626403) chamfered on inside to ensure washer tightens firmly against pulley.	AD4/55A/10259 AD4/55B/1011 449001/12127 449002/2697 449005/1466 (June 1969)
New valve (928622) fitted in place of inlet valve (921433) and exhaust valve (921434). The new valve, which is not fitted with a stem end cap, should be used as a replacement in engines fitted with high-lift camshaft and larger diameter valves.	AD4/55A/11930 AD4/55B/1013 449001/15241 449002/3038 449005/1621 (October 1969)

Main bearing and thrust washer facing material changed from white metal to aluminium tin. The new bearing, 928541, is used in both cap and cylinder block and is interchangeable with previous bearings if fitted in pairs. New thrust washers (928542/3) are fully interchangeable.	AD4/55A/13041 AD4/55B/1013 449001/18000 449002/3433 449005/1723 (January 1970)
Timing gear carrier plate modified to prevent oil leakage. Hole in plate enlarged so that plug bolt (609447) can be fitted at front end of oil gallery, and material of plate bolts changed so that they can be tightened to 25 lb ft (3·46 kg metres).	AD4/55A/13041 AD4/55B/1013 449001/16614 449002/3311 449005/1663 (February 1970)

FOUR-CYLINDER DIESEL ENGINE

SERIES AD4/47

CASE CORPORATION

Pub 9-38114

PRINTED IN U S A

Introduction

The engine fitted to 990 Agricultural Tractors is designated AD4/47 and is a four-cylinder unit of $3\frac{5}{8}$ in. bore and $4\frac{1}{2}$ in. stroke, fitted with wet cylinder sleeves. As the engine must have a flywheel suitable for the clutch (Livedrive or Non-Livedrive) the suffix A or B is included in the designation to indicate the type of flywheel fitted and therefore the tractor model on which the engine is used.

The engine fitted to 990 Industrial Tractors is designated ID4/47 and is basically identical to the AD4/47 engine, the only difference being that the ID4/47 engine is fitted with a flywheel suitable for the twin-plate clutch and has a splined coupling flange attached to the longer flywheel bolts.

Engine Designation and Tractor Models

Engine Series	*Tractor Model*	*Tractor Number*
AD4/47A	**990 Implematic Livedrive**	**440001 to 481999**
	990 Selectamatic Livedrive	**482001 onwards**
AD4/47B	**990 Implematic Non-Livedrive**	**440001 to 481999**
	990 Selectamatic Non-Livedrive	**482001 onwards**
ID4/47	**990 Industrial Models**	**440001 onwards**

CONTENTS

SECTION	Page
Maintenance	1
Fuel System	5
Lubrication System	12
Cooling System	16
Repair Operations	
Engine Tune	18
Decarbonising	19
Pistons and Connecting Rods	21
Crankshaft and Bearings	23
Cylinder Sleeves	24
Timing Gears	25
Valve Mechanism	27
Engine Removal	27
Dimensional Data	32
Summary of Design Changes	37
Approved Lubricants and Test Oils	39

MAINTENANCE

Daily

Check engine oil level. Top up if necessary.

Check air cleaner. Remove filter bowl and examine the oil. In dusty conditions the air cleaner oil should be changed frequently, the detachable wire mesh element removed, washed in diesel fuel, and allowed to stand until all fuel has drained off. (See note regarding air cleaner maintenance.)

If a paper element pre-cleaner is fitted, remove the cover and examine the element. If it is dirty, remove the element and tap it on the side to shake off dust. **Do not attempt to wash a paper element.** Examine for any water, fuel or lubricating oil leaks.

Every 60 hours

Check engine oil level. Top up to the "full" mark on dipstick if required.

Check radiator water level and top up to within 1 in. (2·5 cm) from top if required. If the engine is hot, remove radiator cap slowly as the system is pressurised and may scald the hand if opened quickly.

Visually check the feed pump sediment bowl. Remove and clean if there is any accumulation of dirt or water.

Air Cleaner

Air Cleaner Oil: Air cleaner oil should be changed and the detachable wire mesh element removed and in dusty conditions washed frequently. The maximum dust deposit in the cleaner bowl should never be allowed to exceed $\frac{1}{4}$ in., checked after standing overnight, otherwise oil pullover into the induction manifold will take place, due to the raised oil level.

Oil in the induction manifold, which indicates oil pullover, can be easily checked through the ether plug aperture in the inlet manifold. This pullover will cause rapid engine wear and must be prevented by adequate cleaner maintenance. An SAE 30 grade of straight mineral oil is less susceptible to frothing, and usually cheaper, than the detergent oils used in the engine. In climates where the ambient temperature often exceeds 32° C (90° F) an SAE 50 grade oil may be used. Care should be taken not to overfill the bowl. Only fill to the level mark — not above or below it.

Before assembling the air cleaner thoroughly clean the inside of the pre-cleaner and the inside of the pipe through the centre of the air cleaner. Ensure that the 'O' rings between the cleaner body, lower element and oil bowl are correctly fitted to ensure an air-tight seal. The fit of these 'O' rings is particularly important, as the upper ring may be easily displaced when the oil bowl and lower element are being fitted. The 'O' ring should not be twisted and should fit securely on the small notched register on the lower edge of the air cleaner body. If the 'O' rings are damaged during assembly new rings must be fitted.

Paper Element Pre-cleaner

This is an alternative fitting to the centrifugal type pre-cleaner and incorporates a replaceable paper element. Frequency of attention depends on working conditions and in dusty climates the cover should be removed every few hours of use and the element examined. The element can be cleaned by tapping its side to shake off the loose dust. If the element becomes very dirty, or contaminated with oil or water, it should be renewed. **Do not attempt to wash an element.**

Every 125 Hours

Engine Oil: Drain the oil, while it is still warm, through the sump plug on the underside of the sump plate. Refill with approved oil to within the safe marks on the dipstick. For list of approved lubricants see Page 39. In dusty conditions clean or replace engine breather (see Engine Breather, Page 2).

Every 250 Hours

Engine Oil and Filter: Drain the oil when warm and remove filter bowl. Discard the old element and clean bowl out with clean diesel fuel, using a brush to make sure that the by-pass valve is perfectly clean. Fit a new element and check the sealing ring in the cylinder block groove; fit a new ring if it is damaged or distorted. Do not overtighten the bowl securing bolt — 10 lb ft (1·4 kg metres) is sufficient.

Refill the sump with new oil, start engine to fill the filter then recheck the oil level.

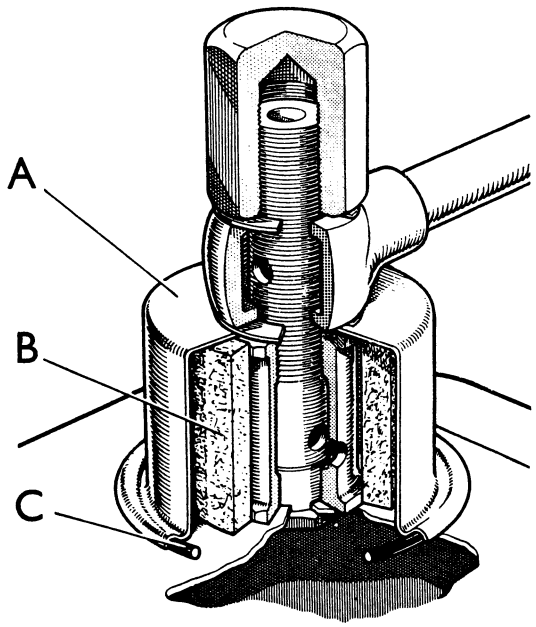

Figure 1. ENGINE BREATHER

A. Cover B. Element
C. Sealing ring

Engine Breather: Remove the domed nut from top and remove the pipe. Lift the cover off and remove breather element. Clean the top of rocker cover and fit a new element. Replace breather cover, ensuring that the 'O' ring is correctly located in the cover lip and replace pipe and nut. Failure to change the breather element could cause excessive pressure to build up in the crankcase with resulting oil leakage from the crankshaft seals. (Fig. 1.)

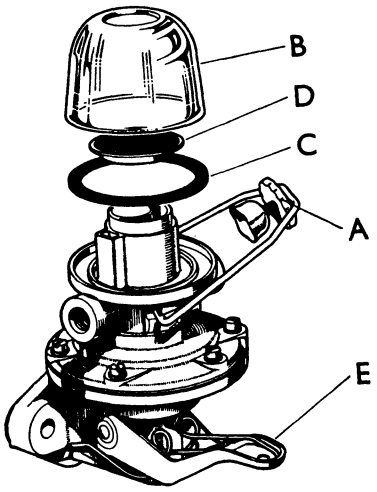

Figure 2. FUEL FEED PUMP SEDIMENT BOWL

A. Bowl securing nut B. Sediment bowl
C. Sealing ring D. Filter gauze
E. Priming lever

Every 500 Hours

Remove sediment bowl and filter, as shown in Fig. 2, and wash in diesel fuel.

Injectors: Remove injectors for cleaning (see Page 7).

Procedure for removal of injectors:

1. Thoroughly clean off all external dirt.
2. Disconnect and remove leak-off pipe.
3. Disconnect high-pressure pipes at injector unions.
4. Slacken nuts holding down the injectors in stages, to prevent distortion.
5. Withdraw injectors carefully. Blank off inlet unions with caps. A protection sleeve should be fitted to nozzle tip.
6. Clean injector bores and remove copper washers. Plug the bores with clean rag to prevent dirt entering engine.

When replacing injectors refit copper washers — new ones if old ones were damaged — and tighten the injector down evenly. Reconnect leak-off pipe and high-pressure pipes leaving the injector unions slack. Turn engine, with stop control in the "run" position and throttle lever full open, until all air is expelled from high-pressure pipes, then tighten the unions. Start engine and check for any leaks.

Valve Clearance

Remove valve rocker cover and check valve clearances when engine is cold. The valve clearance should be set cold to the dimensions on Page 33, Dimensional Data. The clearance between the tip of rocker arm and the end of valve stem should be checked with a feeler gauge as shown on Fig. 3 and adjusted, if necessary, to the correct clearance. Adjustment is made by slackening the locknut and turning the adjusting screw until correct clearance is obtained. When tightening the locknut hold adjusting screw firmly with a screwdriver, then recheck the clearance.

Relative position of valves is as follows:

No. 1 Cylinder (Front)		No. 2 Cylinder		No. 3 Cylinder		No. 4 Cylinder (Rear)	
Exhaust	Inlet	Inlet	Exhaust	Exhaust	Inlet	Inlet	Exhaust
No. 1	No. 2	No.3	No. 4	No. 5	No.6	No.7	No. 8

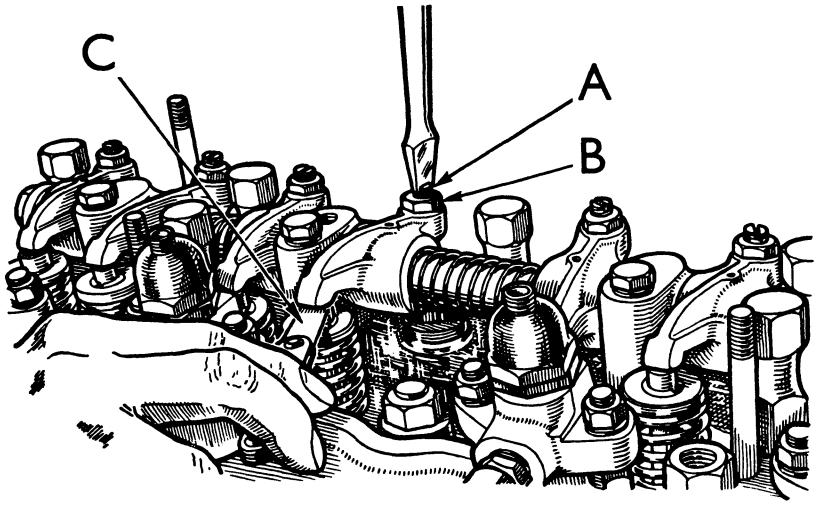

Figure 3. SETTING THE VALVE CLEARANCE

A. Adjusting screw B. Locknut C. Feeler gauge

Valve adjustment is easier if carried out when the injectors have been removed for servicing as the engine can then be turned by means of the fan. If the injectors are not removed, or the holding-down nuts released, it will be necessary to use a box-spanner (Service Tool 960995) on the crankshaft nut to turn the engine.

To ensure the valve tappets are at the base of the cam, adjust the valves in the following order:

Adjust No. 1 valve when No. 8 valve is fully open
Adjust No. 6 valve when No. 3 valve is fully open
Adjust No. 4 valve when No. 5 valve is fully open
Adjust No. 2 valve when No. 7 valve is fully open
Adjust No. 8 valve when No. 1 valve is fully open
Adjust No. 3 valve when No. 6 valve is fully open
Adjust No. 5 valve when No. 4 valve is fully open
Adjust No. 7 valve when No. 2 valve is fully open

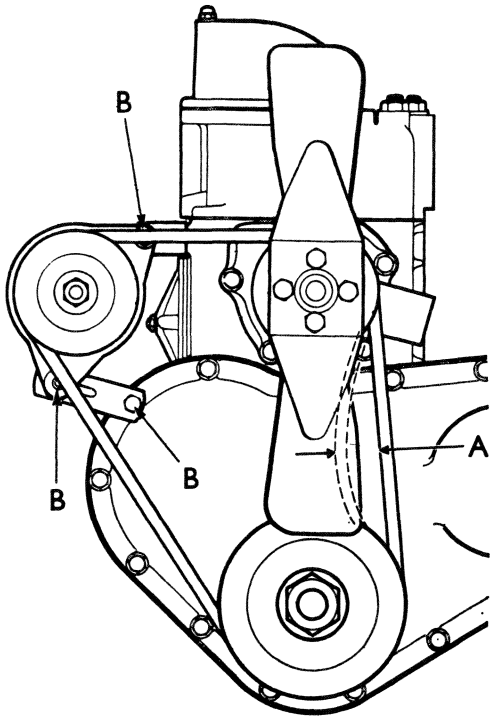

Figure 4. FAN BELT ADJUSTMENT
A. Deflection B. Mounting bolts

Fan Belt

Check tension by deflecting belt midway between the fan and crankshaft pulleys. It should deflect approximately 1 in. (25 mm) and if necessary may be adjusted by releasing the three dynamo mounting bolts and swinging dynamo on the two upper bolts. Tighten lower bolt first, as this will hold dynamo in position whilst the upper bolts are tightened. Do not overtighten the belt. A taut belt will place excessive load on the dynamo and water pump bearings and cause rapid belt wear. If the belt has insufficient tension when dynamo has been adjusted so that the lower mounting bolt is at end of arm slot, the belt should be renewed. (Fig. 4.)

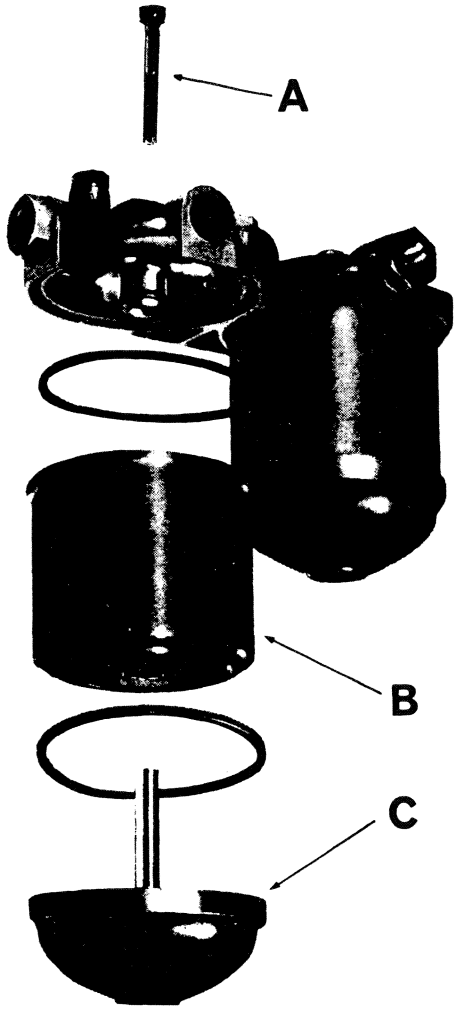

Figure 5. FUEL FILTER
A. Element securing bolt B. Element
C. Filter base

Fuel Filter

Fit a new element in the first fuel filter but do not disturb the second filter. Clean the outside of filter then remove the bolt securing base of first filter to filter head, whilst holding base and element with the other hand. Remove base and discard element. Flush out base and fit a new element, ensuring that it seats correctly on the sealing rings in base and head. Fit a new sealing washer on to the retaining bolt. Replace the bolt and tighten firmly, but not excessively.

Do not attempt to clean fuel filter elements and do not change elements from one filter to another.

Remove and flush out fuel feed pump sediment bowl. As the fuel pump is lower than the tank it will be necessary to turn fuel tap off or, if a fuel tap is not fitted, slacken outlet union on fuel tank, so that fuel will not siphon out. Clean filter gauze with an air blast, or wash in clean fuel. Replace gauze and bowl, ensuring that it seats correctly on the sealing ring. After refitting sediment bowl and tightening the tank outlet union, or turning on fuel tap, vent system to remove air. (See Page 5.) (Fig. 5.)

Water Pump

Apply high-melting-point grease sparingly to the pump grease nipple. A few strokes of the grease-gun are all that is required. Over-greasing will damage the seals and cause eventual bearing failure.

Dynamo

Remove small rubber plug from the centre of dynamo rear end-plate, inject a few drops of engine oil through the hole and replace the plug.

Every 1000 Hours

Engine Oil Pump: Drain the oil and remove sump cover. Remove setscrew attaching gauze to pump. Remove and clean the wire gauze with diesel oil. Do not use a cloth. Refit gauze, sump cover and plug; fill with correct oil (see Page 39).

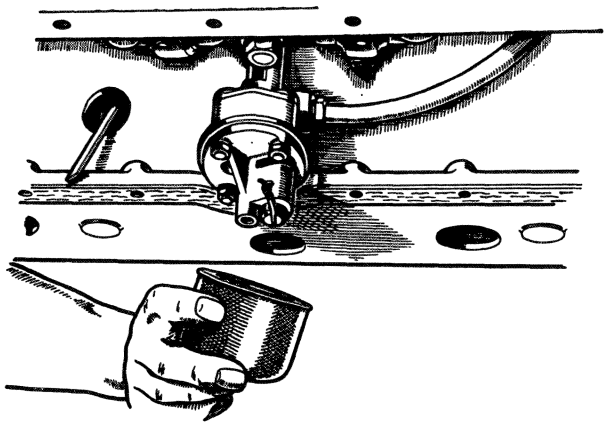

Figure 6. REMOVING THE OIL PUMP GAUZE FILTER

Fuel Filter: Using the same procedure as in 500 hours service, fit new elements in both first and second filters. Do not attempt to clean or interchange the filter elements.

FUEL SYSTEM

Introduction

A thoroughly clean fuel system is essential. Too much emphasis cannot be made on this point and the necessity for correct storage of fuel, proper attention to filter renewal, cleaning the exterior of the tractor before slackening any connections on the fuel system, and care when filling the fuel tank not to allow dirt to enter, must be impressed upon the user. Cotton waste or cloths must not in any circumstances be used in conjunction with fuel injection equipment.

Every care should also be exercised in the workshop. The bench used for servicing of fuel equipment should be situated in a well-lit and separate part of the workshop. If it is possible, an insulated dustproof room should be provided in which the equipment can be permanently installed.

Some of the tools and test gear necessary for servicing injectors are shown in Category 'C' Tool Leaflets. The minimum essentials consist of the following: Two Safety Containers — one filled with petrol for soaking dirty nozzles and the other filled with test oil (see Page 40), or clean diesel fuel, for assembly of the cleaned components. A nozzle bench plate should be screwed to the bench with the jig end overhanging so that an injector can be located on it while the dome nut and lockwasher are slackened or tightened. A Nozzle Setting Outfit should also be securely bolted to the bench with a suitable canister to collect the spray and protect the operator against accidental contact with the spray.

The Flushing device used in conjunction with the Nozzle Setting Outfit is essential. The Nozzle Cleaning Kit (Fig. 13) includes a probing tool but not needles; correct diameter needles can be obtained separately as required. Although the above items are an essential minimum for injector servicing, more complex apparatus or additional items are available where the volume of work makes their purchase worthwhile.

Venting the System

Venting the system is necessary to remove air, as the system cannot operate correctly if air is present. If the system is allowed to run dry, or if any components are disturbed, venting should be carried out as follows:

1. Fill tank to a minimum of 2 gallons — 9 litres of fuel.
2. Clean sediment bowl and filter on lift pump before venting the system to prevent carry over of sludge or water, noting that if a fuel tap is not fitted it will be necessary to release the fuel tank outlet union to prevent fuel siphoning out. Ensure that no air is trapped in the bowl when refitting by filling it to the top with clean fuel.
3. Clean the outside of the fuel filters. Remove the plug G and slacken the connection H. Operate the feed pump priming lever and tighten in the order G then H as fuel appears at each point.

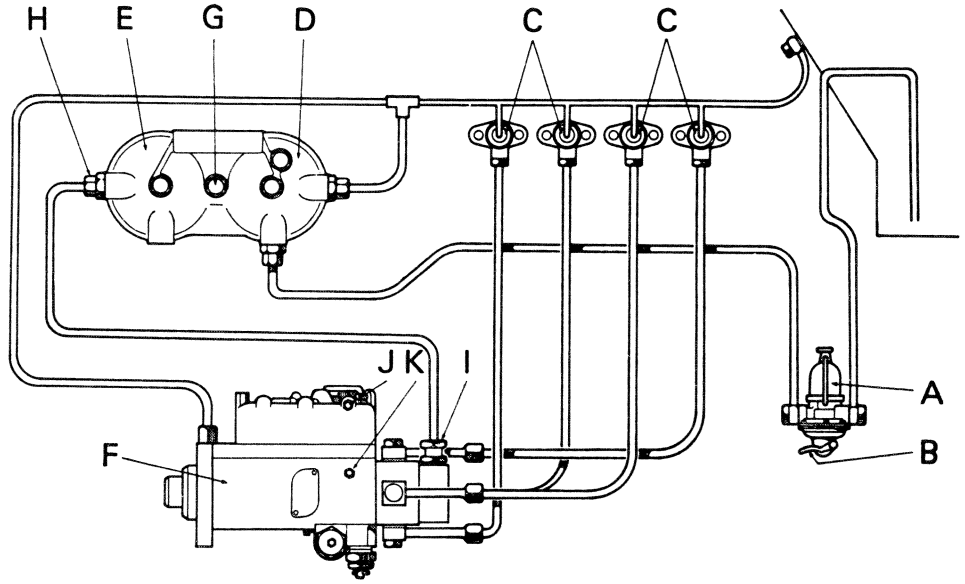

Figure 7. DIAGRAM OF FUEL SYSTEM

A. Fuel sediment bowl
B. Feed pump priming lever
C. Injectors
D. First fuel filter
E. Second fuel filter
F. Injection pump
G. Filter vent plug
H. Filter leak-off union
I. Pump inlet union
J. Pump vent plug
K. Pump vent plug

4. Slacken the injection pump plug J and prime until all air is expelled then tighten the plug and repeat the operation with plug K.

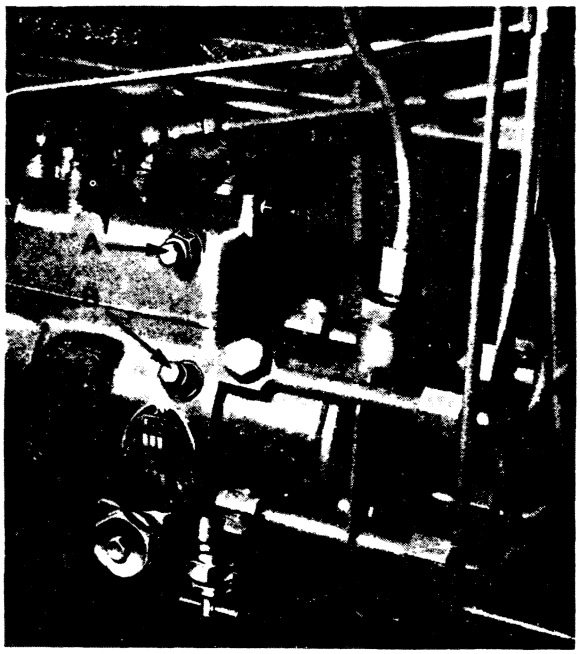

Figure 8. FUEL INJECTION PUMP VENT PLUGS
A. Governor housing vent plug
B. Pump barrel vent plug

5. Slacken the union I and prime until free from air then tighten.
6. Slacken the high-pressure pipes at the nozzle end then, with the engine stop control in the "run" position and the throttle fully open, turn the engine with the starter until fuel is ejected. Tighten the pipe unions and operate the starter: the engine should then start.
7. Having started the engine, check tightness of all the connections, check for any fuel leaks and wipe clean all spilt fuel.

Fuel Feed Pump

The fuel feed pump is mounted on the right-hand side of the engine crankcase and is actuated by a push rod from an eccentric formed on the camshaft.

To remove the fuel feed pump, disconnect fuel pipes at the pump and release the two bolts securing the pump to the engine crankcase. When the pump is removed the push rod may be withdrawn from crankcase.

Renewal of Diaphragm: Clean exterior of the pump and mark top and bottom halves so that they can be replaced in the same position. Remove six cheese-headed screws securing the upper half of the pump to the base and lift off the pump top.

Remove diaphragm complete with pull-rod by turning these through an angle of 90° which should release the pull-rod from the connecting link. Fit new diaphragm and pull-rod over the spring with the tab in the position shown in Fig. 10. Press the centre down until the "T" of pull-rod enters slot in connecting link and turn diaphragm through 90° as shown in Fig. 10 so that they lock together. The upper housing may then be replaced. Press priming lever and keep it pressed whilst the cheese-headed screws securing the housing are tightened. This ensures the diaphragm is not taut.

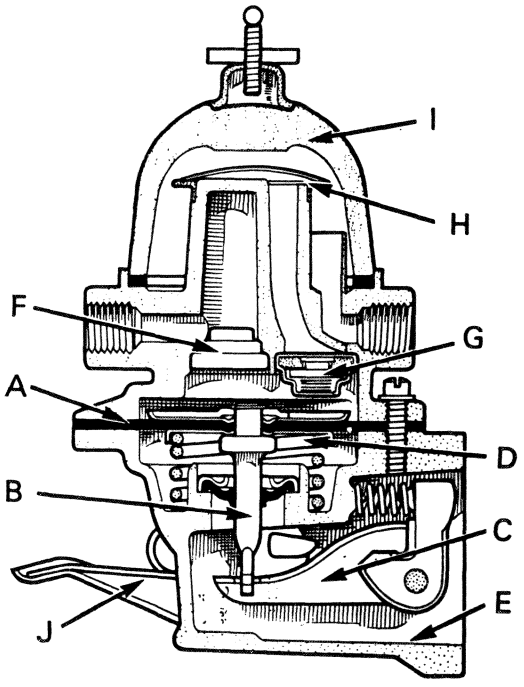

Figure 9. FUEL FEED PUMP
A. Diaphragm
B. Diaphragm pull-rod
C. Connecting link
D. Diaphragm spring
E. Body
F. Outlet valve
G. Inlet valve
H. Filter gauze
I. Sediment bowl
J. Hand primer

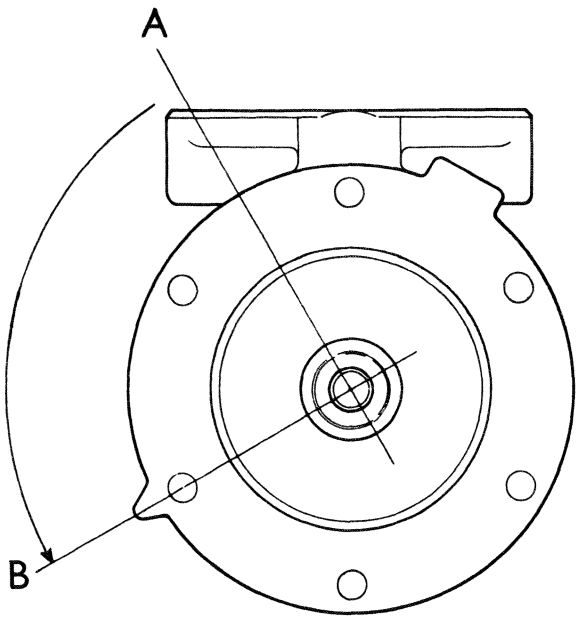

Figure 10. REFITTING FEED PUMP DIAPHRAGM

With the diaphragm tab at position A, fit the diaphragm on to the pump body until the pull-rod enters the link slot, then turn the diaphragm 90°, so that the tab is at position B, to lock the pull-rod in the link slot.

Injector Servicing

Nozzle Testing: The hand tester shown in Fig. 11 is adequate for testing and pressure setting injectors.

Attach the injector to the spray tester and place a canister round the nozzle to ensure that spray does not contact the body. The force of the spray is such that it will easily penetrate the skin, even through clothing. The resultant oil under the skin is very difficult to treat and can be a very uncomfortable wound. The canister will also help to condense the very fine spray which forms an objectionable atmosphere. If regular nozzle testing is contemplated a totally enclosed test chamber with exhauster is advocated.

Pressure Test: With injector mounted in the test outfit, depress hand lever several times to fill the injector and expel any air. Depress lever very slowly and observe highest pressure reading that is obtained before needle on pressure gauge flicks. This is the pressure at which injection takes place. The correct pressure for new injectors is 185 atmospheres, and for used injectors 175 atmospheres.

If the pressure is incorrect but the nozzle is clean and otherwise satisfactory, it should be set to the correct figure as follows: Remove dome cap and slacken locknut, and using a large screwdriver in the pressure adjusting screw D (Fig. 12) adjust the pressure. Only a very small movement will be required unless the nozzle has only just been assembled and the pressure not previously set. When the screw has been adjusted, tighten locknut and recheck pressure.

Back Leakage Test: Operate hand pump until pressure is about 170 atmospheres. Release the handle quickly and measure, with a stop-watch, the time taken between pressure gauge pointer passing the marks for 150 and 100 atmospheres as it gradually falls. For a satisfactory nozzle the time taken should be between 6 and 25 seconds.

Dry Seat Test: Carefully wipe nozzle dry. Build up pressure to 10 atmospheres below the injection pressure. Examine nozzle whilst under this pressure. It should be dry and free from leakage. If the nozzle is inadvertently caused to inject, the tip should be re-wiped dry and tested again.

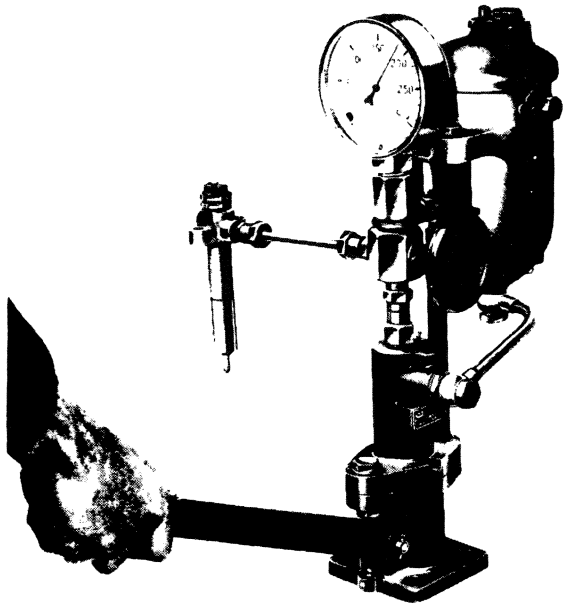

Figure 11. INJECTOR TESTING
Using Service Tool 7044/122FF

Atomisation Test: Isolate pressure gauge by closing valve. Apply eight quick jerks and examine the spray quality. The sprays should be free from coarse or solid streaks and the tip should remain dry. There should be four sprays equally spaced at an inclusive angle of 140°. They are offset 10° to allow for the tilt of the injector in the cylinder head.

Examine injector for signs of leakage at nozzle cap nut, spring adjusting nut, and copper sealing washers.

Nozzle Cleaning: If the injector fails to pass any of the above tests it must be dismantled, cleaned and retested. Note the spring pressure must be released before removing a nozzle. Unscrew the nozzle cap (Fig. 12), using a close-fitting spanner on the flats provided, and remove nozzle, noting that it will only fit in one position because of the locating dowels. Remove needle valve and place in petrol to soften the carbon. Examine nozzle and needle for damage, overheating or scratch marks on the lapped working surfaces. If excessive overheating has occurred, denoted by a dark blue colour of the needle, or if the seat or working surfaces are damaged, reconditioning will be required and a new nozzle should be fitted.

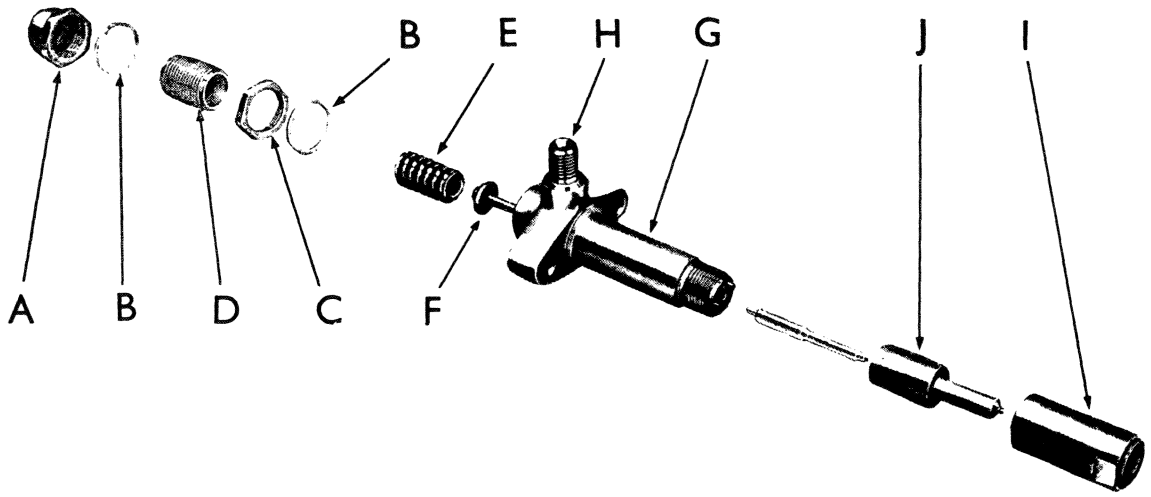

Figure 12. EXPLODED VIEW OF INJECTOR

A. Cap
B. Sealing washer
C. Locknut
D. Adjusting screw
E. Spring
F. Plunger
G. Holder
H. Fuel inlet connection
I. Nozzle nut
J. Nozzle

If the nozzle is not damaged it should be cleaned using the special tools provided in the nozzle cleaning kit shown in Fig. 13 and Tool Leaflet C2. Firstly clean fuel oil channels and bores in the nozzle. Scrape carbon from valve seat with the brass scraper.

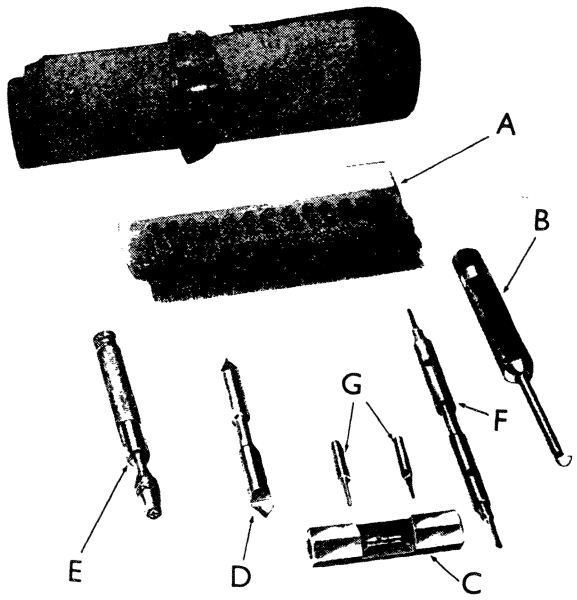

Figure 13. C.A.V. NOZZLE CLEANING KIT

A. Brass wire brush
B. Nozzle body groove scraper
C. Nozzle plunger cleaner
D. Nozzle body seat scraper
E. Holder—probing needle
F. *Pintle hole cleaner
G. *Probes—pintle hole cleaner

* Not required for D.B. nozzles.

Using the special groove scraper clear carbon deposits from oil gallery. Clean spray holes with probing tool fitted with a probing wire of the correct diameter.

If a wire is broken off in the hole it is often impossible to remove it, and the nozzle is then useless. Great care should be exercised when using the probing wires. After clearing the holes scrape carbon from valve seat with the V-tipped brass tool. Next use the tool with the thin blade radiused at its tip to clean carbon out of the sac. After cleaning with the tools, the nozzle should be thoroughly cleaned with fuel. This should be done by placing the nozzle, without needle, in the reverse flushing attachment and connecting to the nozzle pressure tester in place of an injector. Operation of the tester will then thoroughly flush all particles of loose carbon from the nozzle.

With the brass wire brush, gently clean needle valve, paying particular attention to valve seat and needle tip. Brush carbon from nozzle stem and tip.

Reassembly: The needle valve should be fitted to nozzle whilst both are under the surface of clean fuel oil or test oil. Only in this way can dust be excluded from assembly. The needle should slide smoothly in the nozzle and this should be tried several times whilst under the surface of fluid. Needle and nozzle are assembled as a pair and under no account should they be interchanged.

The nozzle should then be assembled on to injector body. In order to avoid distorting needle or plunger the pressure on pressure spring should be released. Remove dome cap, slacken locknut and slacken pressure adjusting screw right back until there is no pressure on spring. Make sure that mating surfaces between nozzle and injector body are perfectly clean. Place nozzle on body with the dowels in correct engagement so that the two faces are in perfect contact, i.e., not held apart by spring pressure. Place the cap over nozzle and tighten adequately but not overtight. Retighten pressure adjusting screw and reset the pressure on spray tester. Test the spray, leak back, etc. If the injector is not required for immediate use it should be stored in a sealed plastic bag or similar container. (Fig. 14.)

It is essential that the copper washer be used under

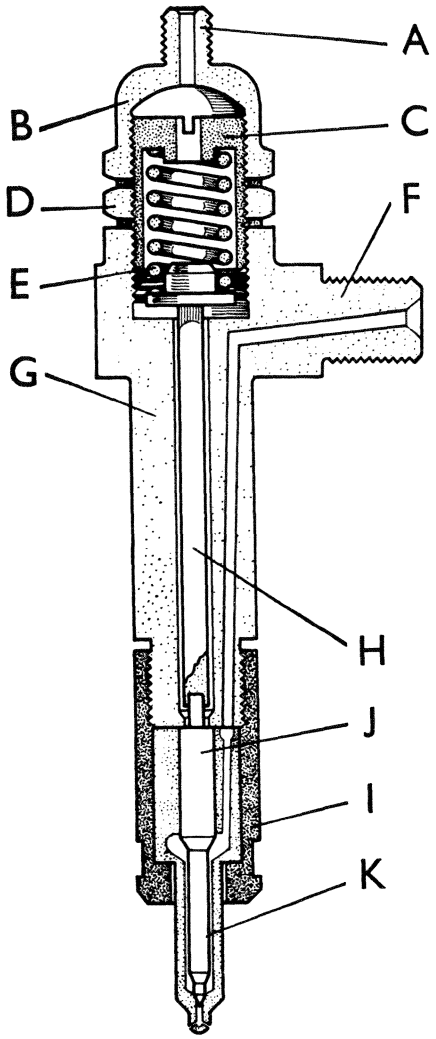

Figure 14. SECTIONED INJECTOR

A. Leak-off connection B. Cap C. Adjusting screw
D. Locknut E. Spring F. Fuel inlet connection
G. Holder H. Plunger I. Nozzle nut
J. Needle K. Nozzle

injector when refitting to engine. Check that the seat in head is clean and that the old washer has not been left in the recess. The use of two washers will raise nozzle tip so that the spray impinges on cylinder head. This causes a loss of efficiency and excessive exhaust smoke.

Injection Pump

The injection pump is attached by three studs on the engine carrier plate, and the pump mounting holes are slotted to permit pump body to be turned for injection timing adjustment. To assist in obtaining the correct timing position the pump flange is marked with a groove and when the timing is set during assembly a mark is made on the carrier flange in line with the mark on pump. Any pump can thus be fitted and the original timing obtained by placing the two marks in alignment. (See Fig. 15.)

The pump is driven from the camshaft by means of an intermediate gear and correct timing of the injection pump can only be obtained if all the timing gears are meshed correctly (see Fig. 44).

Removing the Pump

1. Disconnect all fuel pipes from pump.
2. Disconnect throttle and stop control cables from pump.
3. Check that timing-mark on pump drive housing is visible. If not, scribe a new line in line with the mark on pump.
4. Unscrew holding-down nuts on pump flange.
5. Lift pump away from housing. The quill shaft will probably remain in the pump and should be withdrawn and retained until required.

Refitting the Pump

1. Before refitting the pump check the position of the master spline in the driving gear then fit the quill shaft into the pump (chamfered end of shaft towards pump) and turn the pump so that the master spline on the quill shaft is in line with the gear spline.
2. Fit pump to housing.
3. Rotate pump body until timing marks line up (see Fig. 15) and tighten the three holding nuts.
4. Reconnect all fuel pipes and control cables. Vent fuel system (see Page 5).

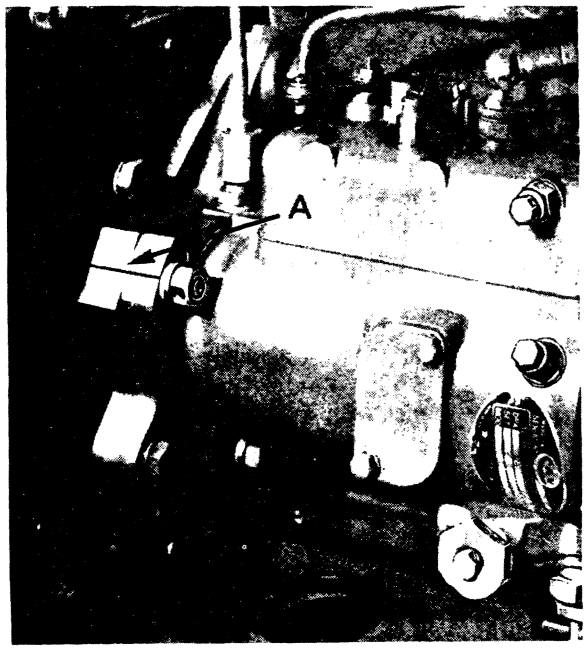

Figure 15. INJECTION PUMP TIMING-MARKS

A. Pump body mark aligned with engine flange

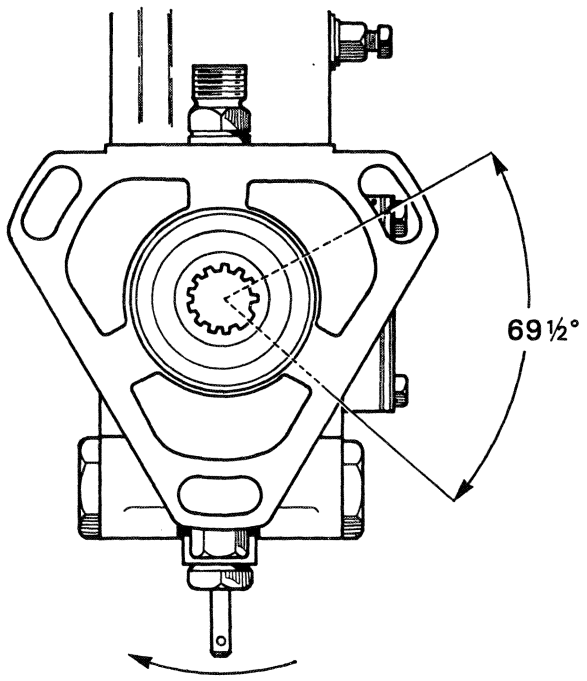

Figure 16. SETTING THE INJECTION PUMP

Retiming the Injection Pump

If the timing-line on pump becomes obliterated the pump can be retimed to the engine as follows:

1. Attach stirrup pipe, Service Tool CAV 7144/262, to Nos. 1 and 4 injector pipe connections and connect the pipe to an injector tester. Set the pump so that the master spline is towards the top of the pump then operate the tester handle to build up a pressure of 30 atmospheres.
2. Fit Service Tool CAV 7144/112U on to the pump quill shaft and turn the pump until it becomes rigid. This will be the point at which injection commences on No. 1 cylinder.
3. Measure 69½° from the blank spline by means of the scale on the tool and mark the pump flange (Fig. 16).
4. Remove the tool, disconnect the tester and refit the pump on the engine, aligning the timing-marks before tightening the mounting nuts.

Fuel Setting

Once the fuel setting has been set for an engine it is most unlikely that it requires adjustment. If adjustment is required then the pump should be removed from the engine and tested for delivery on a Hartridge Test Bench. For details of injection pump fuel setting see Page 34.

Injection Pump Controls

The front lever on injection pump operates the fuel cut-off to stop the engine. The rear lever operates the governor to give required engine speed and is fitted with two adjustable stops. The front stop is for setting idling speed and this should be set so that the engine runs at 650–700 rev/min with throttle lever in shut-off position. The rear stop is for setting maximum speed and should be set at: 2350 rev/min no load to give 2200 rev/min full load.

Fuel Filters

The double fuel filter mounted on the left-hand side of the engine contains two replaceable paper elements. These are connected in series, so that all fuel must pass through both elements before it is fed to the injection pump. Always wipe the outside of filter clean before removing the elements and fit new elements at the time specified. New elements should also be fitted whenever a new, or reconditioned, fuel injection pump is fitted. Do not attempt to clean elements and do not change elements from one filter to another.

Fuel Tank Removal

The easiest way of removing the fuel tank is to remove the tank complete with instrument panel, then remove instrument panel from tank.

First drain tank by unscrewing union nut on fuel tap outlet and allowing fuel to flow by gravity into a suitable, **clean** container. If tractor is not fitted with a fuel tap, remove union from fuel feed pump inlet and allow the fuel to siphon through pipe into a suitable, clean container. Do not release the union at the tank end of pipe as this will allow air into pipe and prevent the siphon action from taking place. Disconnect tractormeter drive cable and wiring. Some of the wires are fitted with snap connectors, but others, such as oil warning switch wire, will have to be disconnected at their terminals.

Remove fuel tank mounting bolts and fuel cut-off control-rod spring bracket, unscrew fuel outlet and leak-off pipes from tank and lift tank assembly from its support.

Replace the tank in reverse order of removal ensuring that seating pads are in position and wires are replaced in their correct connectors.

STARTING AIDS

For use in cold weather

Manual retard device on injection pump: The wing-nut on the under-side of pump should be screwed in **before** trying to start engine. As soon as engine is running the wing-nut must be screwed out, otherwise erratic running with black exhaust smoke and loss of power will occur. Do not screw manual retard nut in immediately after an unsuccessful attempt to start engine. If you attempt to start engine prior to screwing in manual retard, wait 15 to 20 seconds to allow pressure inside

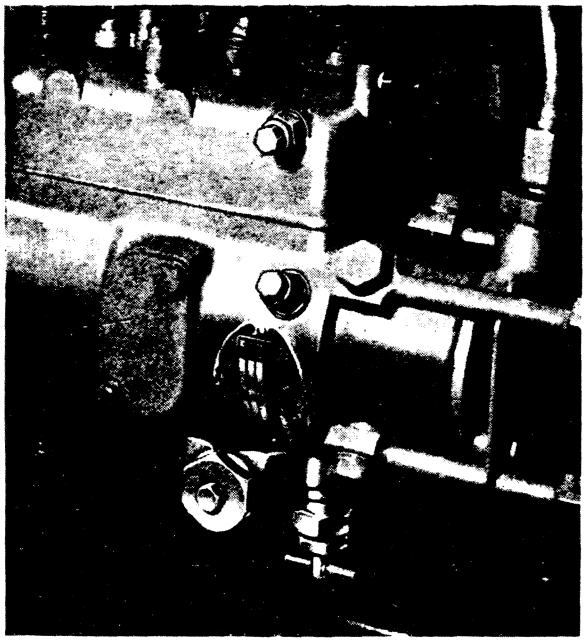

Figure 17. INJECTION PUMP RETARD CONTROL
A. Wing nut

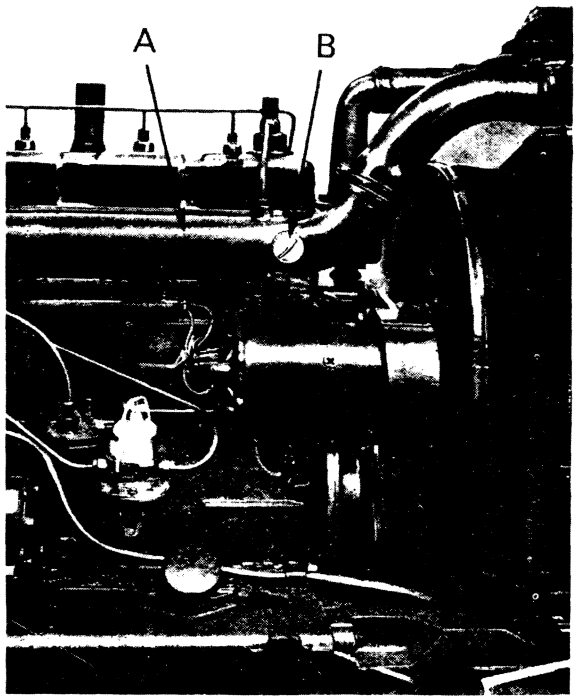

Figure 18. ETHER STARTING PLUG
A. Inlet manifold B. Plug

pump to fall; otherwise pump will be locked in the advanced position and engine will not start. It is advisable to screw the wing-nut in **before** attempting to start engine. (Fig. 17.)

For use in sub-zero temperatures

Ether plug : In the inlet manifold there is a plastic plug with a felt pad on the end. Unscrew plug and dip felt pad into ether or a proprietary starting fluid, replace plug in manifold and start engine immediately. (Fig. 18.)

Warning

Serious damage can be caused to an engine by the use of an excessive amount of ether. The plug should be removed, the felt soaked in ether and then replaced. **Ether in excess of the quantity absorbed by the felt must not be added.**

It must be noted that other aids do exist, namely that correct oil should be used (see Page 39) and the battery should be kept charged by running the engine for adequate periods of time.

LUBRICATION SYSTEM

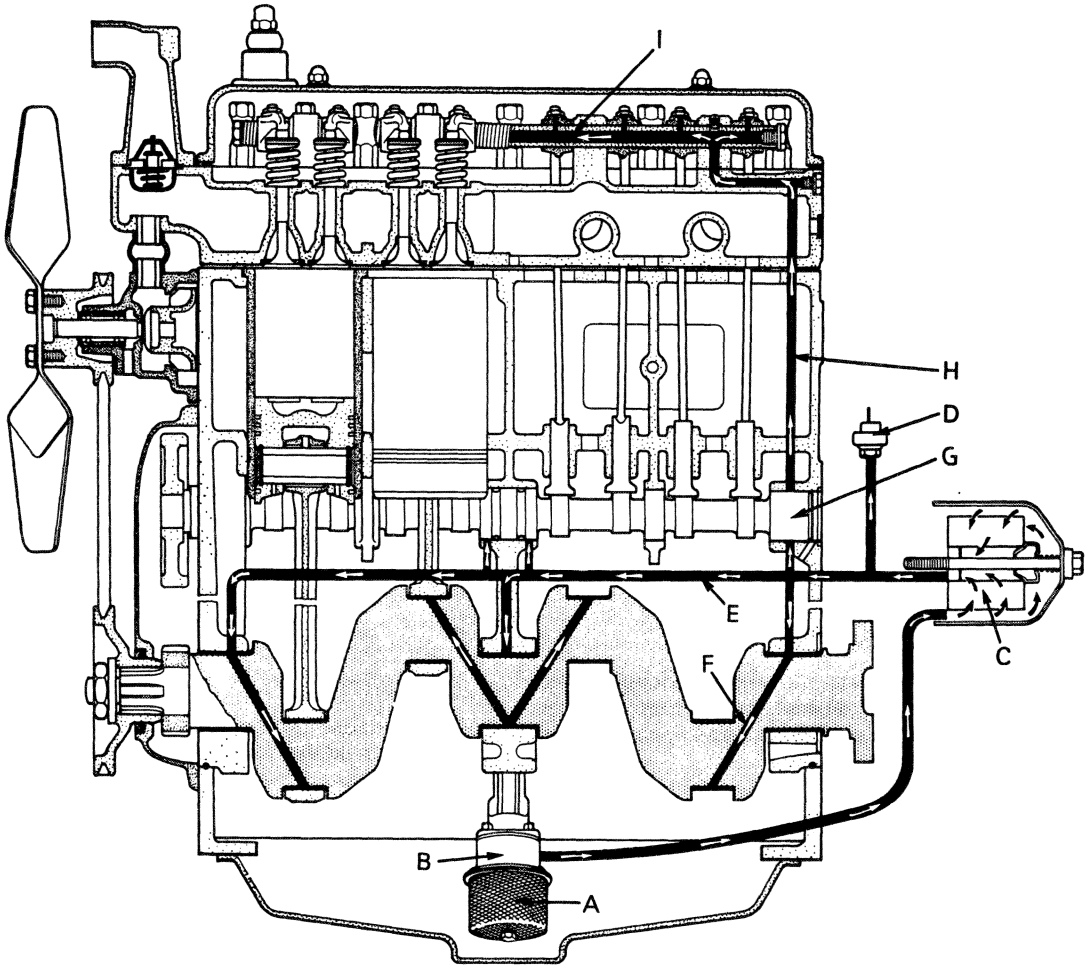

Figure 19. LUBRICATION SYSTEM

A. Inlet gauze
B. Oil pump
C. Filter
D. Warning light switch
E. Oil gallery
F. Crankshaft oil passage
G. Camshaft rear bearing
H. Valve gear feed
I. Rocker shaft

Engine Lubrication

Oil is drawn from the sump by the gear-driven rotary oil pump and delivered under pressure to the oil filter. After filtration the oil passes to the main oil gallery in the cylinder block and so, via oilways in the block webs, to the crankshaft main journals and then on, through further oilways in the cylinder block, to pressure lubricate the camshaft bearings. The big-end bearings are lubricated by drillings in the crankshaft webs.

The rocker shaft and valve rockers are intermittently fed with oil from the camshaft rear bearing through oilways in block and head and an external connecting pipe. The camshaft is drilled off-centre so that the oilways are connected only once in each revolution. (See Fig. 20.) The oil lubricates the tappets and push rods as it returns to the sump.

The intermediate gear is pressure fed via its hollow shaft and an oil-way in the cylinder block. A connection at the front end of the main oil gallery supplies a reduced flow of oil to the injection pump drive gear. Surplus oil in the timing cover forms an oil bath which splash lubricates the timing gears.

A full-flow oil filter is mounted on the left-hand side of the cylinder block. The filter incorporates a by-pass valve so that if the pressure difference between the filter inlet and outlet exceeds 10 lb/sq in. the valve opens and allows oil to by-pass the element and flow straight into the oil gallery. The engine is not, therefore, starved of oil if the element is allowed to become choked, but it is supplied with unfiltered oil. The replaceable paper element should be renewed at the intervals specified on Page 1. A new element should also be fitted when an engine is overhauled and also if a cylinder head gasket fails.

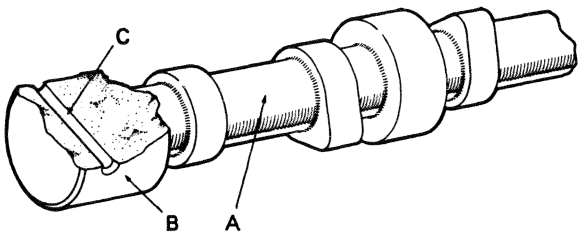

Figure 20. VALVE GEAR OIL FEED

A. Camshaft B. Rear journal C. Oil passage

If engine oil and filter element are not changed when a failed cylinder head gasket is replaced, any water which has leaked into sump will cause the paper filter element to swell and fail to pass oil. (Fig. 21.)

Do not attempt to clean a filter element.

Oil Warning Light

The oil warning light on the instrument panel is earthed by a switch in the cylinder block and when the switch opens the light is extinguished. The switch is connected into the main oil gallery and should open at 9 to 13 lb/sq. in. (0·6 to 0·9 kg/sq. cm) but if not, it must be replaced because no adjustment is possible. If incorrect oil pressure is suspected the oil switch can be removed and a pressure gauge connected into the cylinder block, which is threaded $\frac{1}{8}$ BSP, so that the actual oil pressure will be shown when the engine is started.

Oil Pump

The gear type oil pump is located in the engine sump and contains a relief valve which is set to open at 40 lb/sq. in. (2·8 kg/sq cm).

To Remove the Pump

1. Drain engine oil and remove sump.
2. Disconnect outlet pipe from pump to cylinder block.
3. Disconnect the tractormeter cable.
4. Release locknut and remove pump locating screw, which is situated on the right-hand side of block, and withdraw pump downwards.

The oil pump must be dismantled to check gear wear, gear end-float, and the condition of the upper bearing.

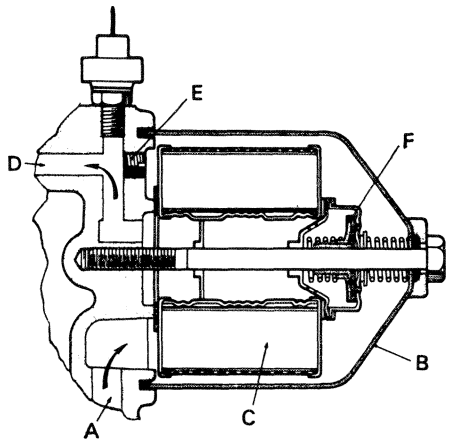

Figure 21. SECTION THROUGH OIL FILTER

A. Oil feed from pump B. Bowl C. Element
D. Outlet to oil gallery E. Plug F. By-pass valve

To Dismantle Pump

1. Remove the two setscrews and two bolts securing pump cover, noting that the two bolts are special locating bolts and must be fitted in their correct places when re-assembling.
2. Remove cover, complete with relief valve, and filter.
3. Check backlash between gears — this should be 0·020 to 0·026 in. (0·51 to 0·66 mm).

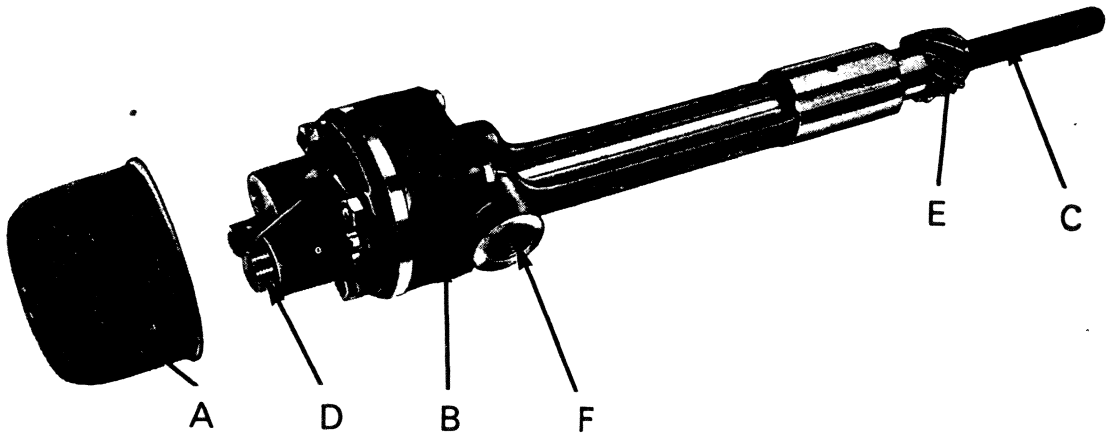

Figure 22. LUBRICATING OIL PUMP

A. Oil inlet gauze B. Pump body C. Driveshaft
D. Relief valve screw E. Spiral pinion F. Oil outlet connection

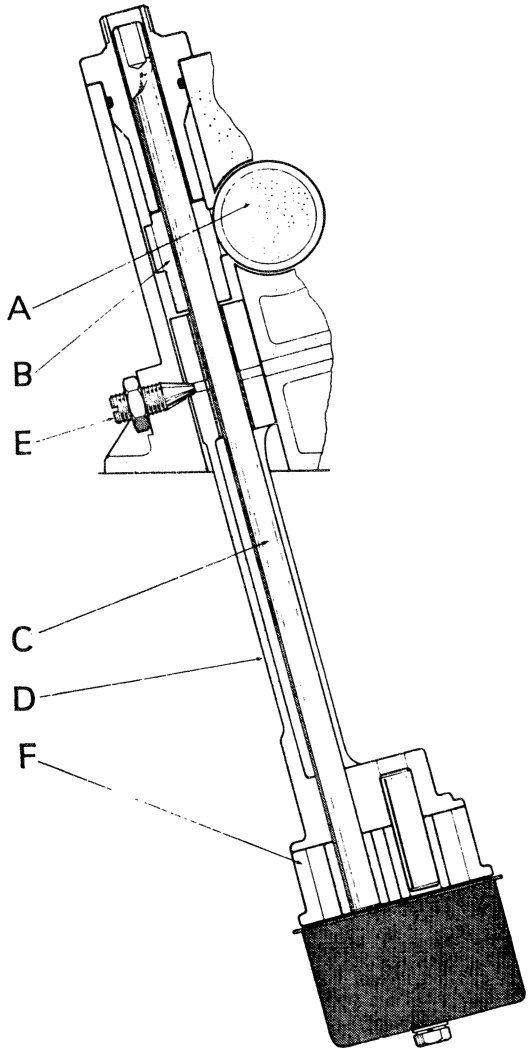

Figure 23. OIL PUMP DRIVE

A. Camshaft B. Spiral pinion C. Driveshaft
D. Pump bracket E. Locating screw F. Pump body

4. Remove driven gear and shaft.
5. Use a drift to force driving shaft from driving gear.
6. Check rotor and housing dimensions.
   Rotor width: 1·1865 – 1·1855 in. (30·13 – 30·11 mm)
   Housing depth: 1·1890 – 1·1875 in. (30·19 – 30·16 mm)
   Rotor side clearance: 0·001 – 0·0035 in. (0·025 – 0·089 mm)
   If end-float is excessive but backlash is within limits and the gears are not worn, it is permissible to grind the face of the housing to reduce end float. If the gears are damaged, both gears should be replaced. Never replace one gear only.
7. Check the upper bearing for wear.
   Bush internal diameter: 0·4905 – 0·4925 in. (12·46 – 12·51 mm)
   Shaft diameter: 0·4895 – 0·490 in. (12·43 – 12·45 mm)

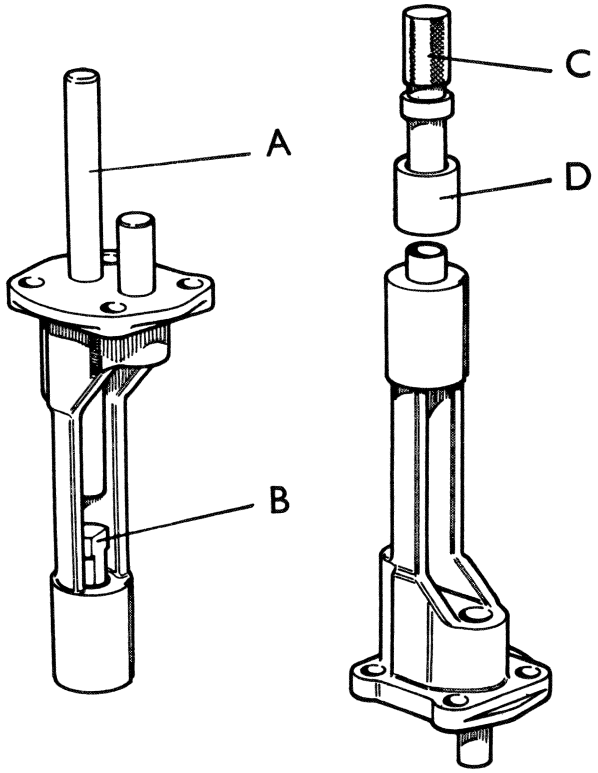

Figure 24. REPLACING OIL PUMP BRACKET BUSH (Using Service Tool 901701)

A. Long drift B. Pilot C. Replacer drift
D. Centraliser guide

   Clearance: 0·0005 – 0·003 in. (0·02 – 0·08 mm)

If wear is excessive, remove the bush and replace using Service Tool 901701 as detailed below:

1. Slip special pilot bush B through slot in pump bracket to locate in driveshaft bush.
2. Stand pump bracket on a suitable hollow anvil or press base.
3. Place drift A in position.
4. Drive or press out pump bracket bush.

To replace the new bush:

1. Place new bush on the replacer drift C.
2. Push centraliser D over new bush and drift C until oil-hole in bush just shows at bottom edge of centraliser, ensuring that the oil-holes in bush and bracket are in line.
3. Start new bush in pump bracket and slide of centraliser, ensuring that the oil-holes in bush and bracket are in line.
4. Stand the pump bracket on a flat anvil or press base; drive or press C until it butts firmly against D. The bush is now in its correct position in pump bracket. The driven rotor shaft may be removed using drift A.

Relief Valve

If the valve is to be removed for cleaning purposes take note how many threads are showing above the

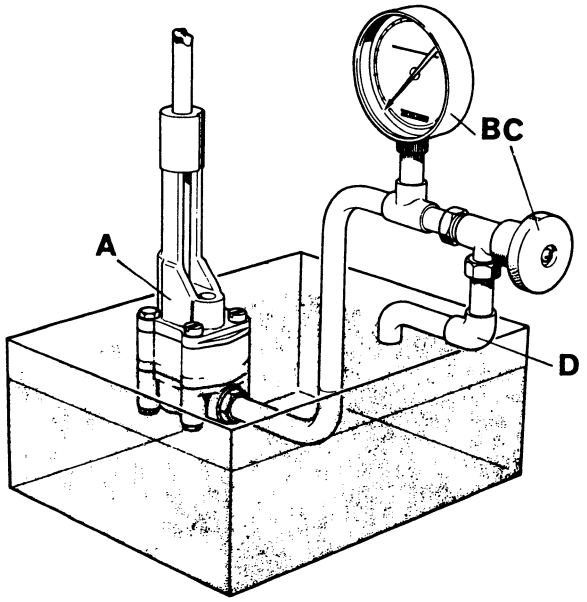

Figure 25. OIL PUMP TEST RIG

A. Oil pump B. Pressure gauge C. Shut-off valve D. Swivelling outlet

locknut before removal. This is necessary so that the valve may be set in its original setting if a test rig is not available.

Approximate figures to use as a guide when setting the valve are: four threads showing above locknut give approximately 40 lb/in.^{2}; one full turn produces a 6 lb/in.^{2} variation in pressure.

To check the pressure, the oil pressure warning switch should be removed and a gauge fitted into the $\frac{1}{8}$ BSP hole in the cylinder block.

If a test rig is available the following procedure should be adopted:

1. Use Shell Fortisal 5W at room temperature of 20°C (68°F) or 20/20W at 46°C (115°F), which is equivalent to hot engine oil.
2. Pump to be driven at 750 rev/min or 330 rev/min.
3. Relief valve set to open at 40 lb/sq. in. (2·8 kg/sq. cm).
4. Pump flow at 20 lb/sq. in. should be 19·2 pints/min (10·9 litres/min) at 750 rev/min and 8·4 pints/min (4·7 litres/min) at 330 rev/min.
   Delivery in pints/min = $\frac{480}{\text{time in seconds for one gallon to flow.}}$

   Maximum time for one gallon should be:

   25 seconds at 750 rev/min.

   57 seconds at 330 rev/min.

To Replace the Pump

Reverse the removal procedure. Coat the locating screw with Wellseal, or a similar jointing compound, screw tightly into the cylinder block then tighten locknut.

COOLING SYSTEM

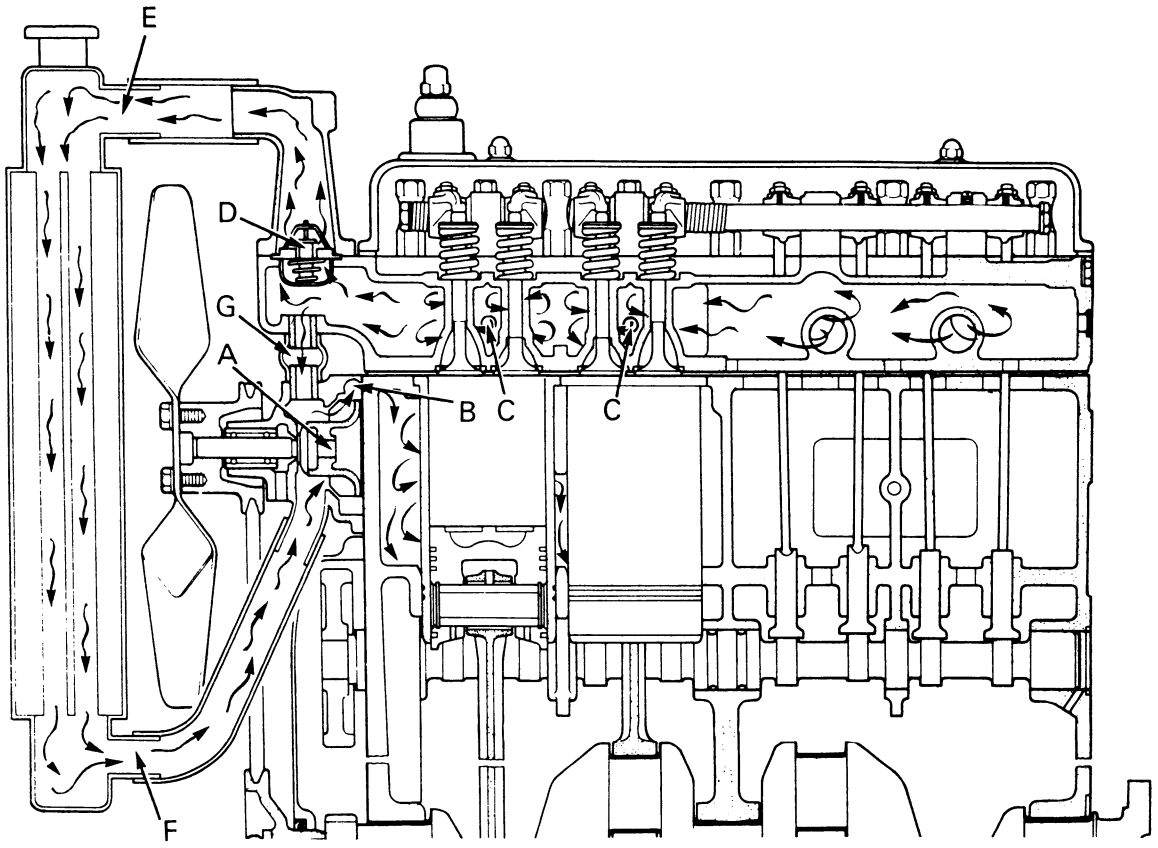

Figure 26. COOLING SYSTEM

A. Pump impeller
B. Passage into cylinder head
C. Jets on to valve ports
D. Thermostat
E. Radiator inlet
F. Radiator outlet
G. By-pass connection

Path of Water

Cold water is drawn into the water pump from the bottom of the radiator and is then pumped through a passage in the cylinder block to the cylinder head, where it is directed, in the form of jets, on to the injector bosses and integral valve guides. The water is able to pass, by thermo-siphon, into the block through the mating passages in the cylinder head and block to cool the cylinders. The hot water returns from the head to the top of the radiator through a thermostat which is only fully open when the engine reaches its working temperature.

When the thermostat is closed the water passing out of the cylinder head cannot pass into the radiator and therefore circulates through the by-pass into the inlet side of the water pump, thus ensuring that working temperature is reached as quickly as possible.

The system is pressurised by a spring plunger in the radiator cap, which allows steam to escape through the overflow pipe if the pressure exceeds 4 lb/sq. in. (0 28 kg/sq. cm).

The fan is mounted on the same spindle as the water impeller and is driven by a 'V' belt from the crankshaft at 1½ times engine speed. (Fig. 26.)

Removal of Water Pump

This operation can be accomplished, without removing the radiator, in the following manner:

1. Drain the water from radiator and cylinder block.
2. Remove waste pipe from radiator to pump.
3. Remove fan belt.
4. Remove fan blades (ensuring that they are marked in such a way that they can be refitted in the same position, thus safeguarding against the possibility of them getting out of balance).
5. Slacken clip securing by-pass hose. Unscrew the five bolts fixing pump to cylinder block and remove pump.

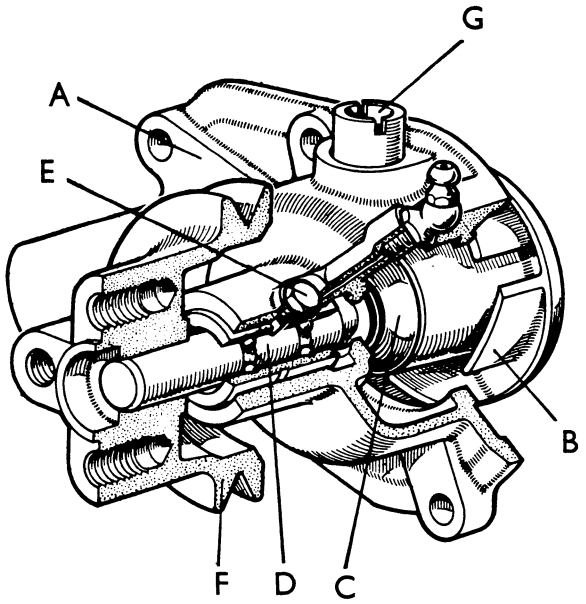

Figure 27. ARRANGEMENT OF WATER PUMP

A. Body B. Impeller C. Gland seal
D. Bearing and shaft E. Bearing locating screw
F. Pulley G. By-pass connection

Fitting a New Seal or Bearing

Remove bearing location screw E (Fig. 27) from pump body. Place pump, impeller upwards, on the bed of a press and suitably support it with packing. Press spindle and bearing assembly out, taking care not to damage impeller or pump body.

After spindle and bearing assembly has been removed the impeller may be lifted out and the seal prised out of end of impeller. The seal is supplied as a self-contained assembly and no attempt should be made to dismantle it. A new seal should be carefully pressed into impeller bore using a little Pressoline No. 2 compound (one part Pressoline to three parts water) as a lubricant. Press the seal in until the shoulder touches the end of the impeller, taking care not to cut or damage the seal. Coat the contact face of the seal with anti-scuffing paste to prevent the seal sticking to the pump body.

Examine the spindle and bearing assembly and, if this is to be renewed, remove pulley with a suitable extractor or press.

As gland seals are affected by light they should be stored in a light-tight drawer or box. The wax wrapping paper is not sufficient and seals will deteriorate if exposed to light during storage.

Reassembly of Water Pump

Position bearing-locating hole so that it is in line with the screw-hole in pump body then push bearing into the body and fit the locating screw. After tightening locating screw, lock the screw with the tabwasher.

Press pulley on to spindle until the end of spindle is level with the end of pulley bore. Do not fit pulley by hammering it on to spindle but press the spindle into pulley by pressing against the impeller end of spindle.

Press impeller on to spindle until the sides of impeller blades are 0·005 in. (0·13 mm) clear of the pump body. Ensure that the seal is not damaged when fitting the impeller and do not support the pump on the pulley when pressing impeller into position. Support pulley end of spindle on a short piece of $\frac{7}{8}$ in. (22 mm) diameter bar, so that the thrust is taken on the end of spindle and does not tend to push the pulley further on to spindle.

Before replacing water pump, check the condition of by-pass hose; if this is at all suspect it is advisable to renew it, as renewal is more difficult when both pump and cylinder head are in place.

A new gasket should always be used when refitting the pump and plain washers fitted on the fan blade setscrews, to avoid any possibility of blade failure due to fatigue.

Thermostat

To test the thermostat, remove it and place it in cold water together with an accurate thermometer. Heat the water and as the temperature rises note at what stage the thermostat begins to open. This should be at between 174°F and 183°F (79°C – 84°C). At 200°F (94°C) it should be fully open. If placed in boiling water the thermostat should be fully open within 60 to 90 seconds.

On the base of the thermostat the figure 180 signifies the temperature at which it should start to open.

REPAIR OPERATIONS

Engine Tune

1. **Compression:** To check the compression use a Test Gauge such as is shown in the Service Tools List. Remove all injectors and, using the correct length of extension, fit the gauge into No. 1 injector bore. Tighten down with injector nuts to give an airtight seal and with the stop control in the "stop" position turn engine with starter. It is advisable to use a fully charged battery. Note the compression reading and repeat the procedure for the remaining cylinders. If the four readings are approximately the same then proceed with the engine tune. If there is an appreciable difference in readings then it will be necessary to decarbonise cylinder head, as the loss of compression is probably due to faulty valves or valve seats.

Compression Figures

Compression ratio 17:1. Air temperature 68°F (20°C)

Crankshaft Speed	Pressure lb/in²	Pressure kg/cm²
150 rev/min	380 – 400	26·6 – 28·0
250 rev/min	415 – 435	29·0 – 30·5

2. **Injectors:** Service and set before replacing. (See Page 7.) Take care to fit copper sealing washers and tighten nuts down evenly to avoid distortion.
3. **Fuel:** Clean fuel sediment bowl and replace fuel filter elements as necessary. (See Page 3.) Vent the system, finishing with tightening the injector unions (as in Fuel System, Page 5).
4. **Breather:** Fit a new breather element as instructed under Maintenance, Page 2.
5. **Valves:** Check valve clearances, taking care to follow instructions on Page 2.
6. **Timing:** Check timing marks on pump and pump drive housing. If necessary loosen the mounting nuts and rotate the pump to align the marks.

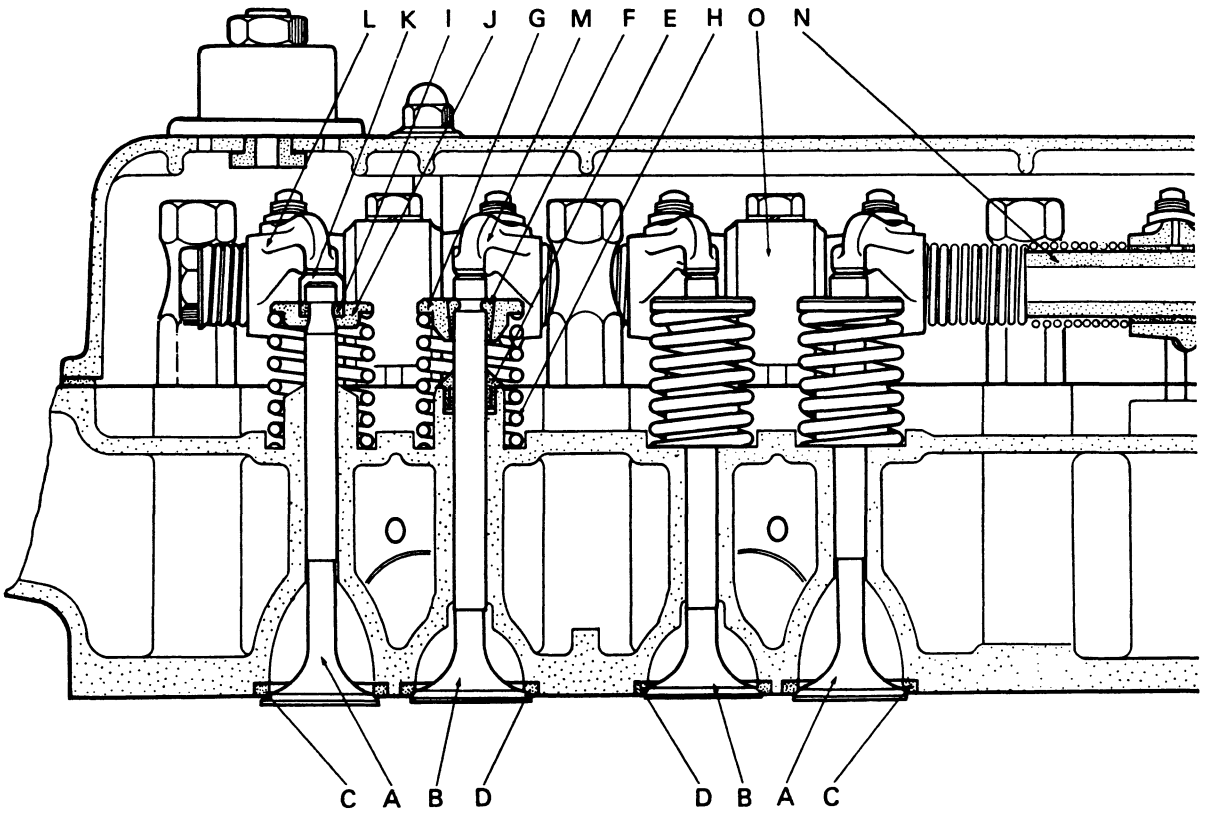

Figure 28. ARRANGEMENT OF VALVES

A. Exhaust valves
B. Inlet valves
C. Exhaust seat inserts
D. Inlet valve seats
E. Inlet valve stem seal
F. Inlet valve cotters
G. Inlet valve cup
H. Springs
I. Exhaust valve cotters
J. Exhaust valve cup
K. Stem end-cap
L. Exhaust valve rocker
M. Inlet valve rocker
N. Rocker shaft
O. Bracket

7. **Air Cleaner**: Clean out oil bath and replenish with the correct oil. Wash out gauze filter and clean tube and pre-cleaner. If a paper pre-cleaner is fitted, clean or renew the element. (See Page 1.)

Decarbonising the Engine

When compression is low or engine is down in power due to an accumulation of carbon inside combustion chamber, the cylinder head should be removed, cleaned of carbon deposits and the valves re-seated.

To Remove Cylinder Head

1. Remove the bonnet, disconnect the battery and drain the cylinder block.
2. Remove injector leak-off pipe and four high-pressure injector pipes.
3. Remove injectors and copper sealing washers. Before refitting, injectors will require servicing and testing. (See Page 7.)
4. Remove breather pipe from air cleaner and unscrew the four domed nuts and remove rocker cover and gasket.
5. Slacken clips on by-pass hose.
6. Remove rocker shaft oil-feed pipe.
7. Remove rocker shaft assembly and push-rods.
8. Remove the ten nuts, seven bolts and two lifting nuts, holding the head to cylinder block, in reverse order to tightening procedure, to prevent distortion of head.
9. Lift off cylinder head and place on the bench.
10. Remove gasket, clean cylinder-block face and oil the bores before covering over with a cloth or sheet of paper for protection.

Dismantling the Cylinder Head and Cleaning

1. Remove inlet and exhaust manifolds, scraping out ports in exhaust manifold and washing to clean away carbon.
2. Mark all valves on head with a number to ensure re-assembly in same order.
3. Remove valve springs, cotters, collars and inlet valve seals and wash in paraffin.
4. Clean the head, scraping all carbon from valve ports, then wash and clean with an air jet.

Valves and Seats

The valve stems operate direct in micro-finished bores in the cylinder head (no separate guides). The inlet valves are fitted with taper cotters which grip the valve stem and prevent it from rotating, but the exhaust valve cotters are parallel and the valve has a loose cap on the end of the stem. The valve rocker does not, therefore, operate directly on the valve stem but operates against the cap so that the valve is free of pressure at the beginning and end of each opening period. This allows the valve to rotate, keeping it free of carbon and prolonging seat life.

Clean the valves and reface if necessary, using a suitable valve grinder. The valve faces should be ground at 45° and care must be taken not to remove too much metal as the exhaust valves will overheat if heads are ground to a knife-edge finish.

Examine the ends of the inlet valve stems and if worn, lightly skim on a valve refacing machine, using the V-support guide to ensure that the end is ground square with the valve stem.

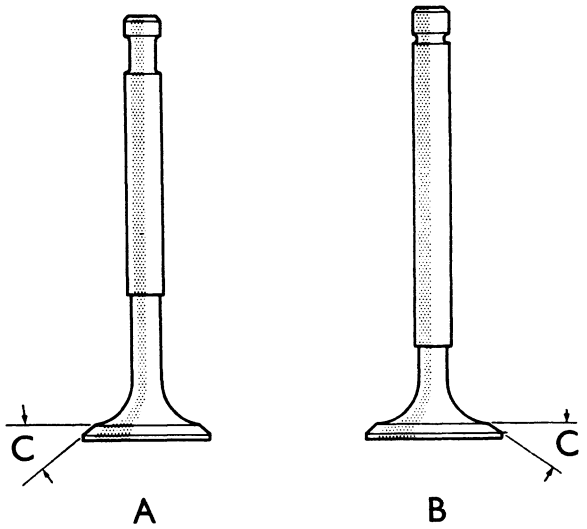

Figure 29. INLET AND EXHAUST VALVES
A. Exhaust valve B. Inlet valve
C. Seat angle 45°

Examine valve seats. If seats are in good condition but only discoloured, lapping-in the valves will be sufficient to obtain a good seat, but if seats are pitted it may be necessary to recut them before lapping-in the valves. Use a valve seat cutter, or grinder, with a pilot of the correct diameter, to ensure an accurate seat (see Tool Leaflet B9). Do not remove more metal than is necessary. If valve seat becomes wider than 0·065 in. (1·65 mm), the seat insert should be removed and a new insert fitted. To remove the insert, weaken by drilling almost through then crack it with a sharp chisel, taking care not to damage cylinder head, and covering insert with a piece of cloth, to prevent injury from flying particles. Clean the head counterbore and after cooling new insert with dry ice (solid carbon dioxide) quickly tap it into position using Service Tool 960602. The seat must be fitted with its chamfered edge into the head counterbore and then ground flush with the head face before the seat is cut.

Oversize Valves

The valve guides are cast integral with cylinder head and if excessive wear takes place the guide can be reamed true and new valves with oversize stems fitted. Valves with 0·010 in. and 0·020 in. oversize stems are available and the appropriate size reamer

should be used (see Service Tool Leaflet A28) to obtain an accurate bore. It is also important that the bore has a good surface finish and special care should be taken when reaming; use a liberal quantity of cutting fluid and a very slow-running pillar drill. When bore has been reamed to the correct size, fit new valve and check valve seat with marking blue. If valve head touches seat all the way round, lapping-in will be sufficient, but if valve head only touches seat at one side the seat is not concentric with guide bore and will require cutting before lapping-in.

Valve Springs

If suitable equipment is available, check spring lengths when under load, but if such equipment is not available check the free length. (See Page 33.)

If any spring is weak, broken or corroded, and engine has run for a large number of hours it is advisable to fit a complete set of new springs.

Cylinder Head Face

The face of cylinder head should be smooth and free from distortion and damage, otherwise the cylinder head gasket may be unable to provide an effective seal.

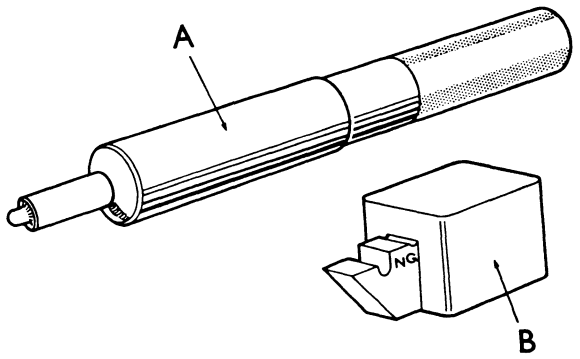

Figure 30. CYLINDER HEAD FACE GAUGES
A. Depth gauge (960938) B. Slip gauge (960940)

If the cylinder head face is reground care must be taken to obtain a smooth finish: a fine stone should be used with a slow feed. Before surface grinding check how much metal can be removed by using Service Tools 960938 and 960940. Insert depth gauge into injector recess, ensuring that both recess and tool are clean, then check protrusion of depth gauge above head face with slip gauge. If face G of slip gauge beak fouls end of depth gauge the cylinder head face has been previously ground to the limit and no further grinding is permissible. If beak face G passes over end of depth gauge the head face can be ground and the thickness of feeler gauge which can be fitted between tip of depth gauge and face G will indicate the maximum amount of metal that should be removed.

Valve Lapping

Using a suitable tool to hold the valves and rough grinding paste, lap-in all the valves to obtain full-circle contact between valve and seat, then lap-in again with smooth grinding paste, and wipe clean.

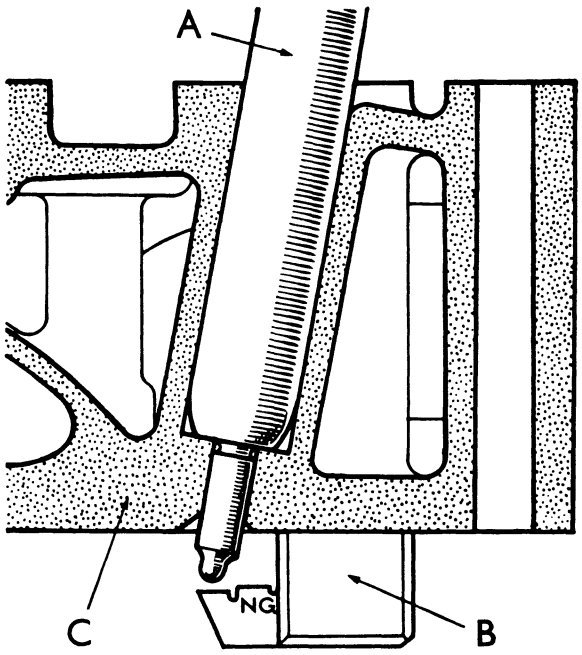

Figure 31. CHECKING THE CYLINDER HEAD BEFORE REFACING
A. Depth gauge B. Slip gauge C. Cylinder head

To Reassemble and Replace the Cylinder Head

1. Renew inlet valve seals (see Fig. 28) using Service Tool 961236, making sure there are no burrs on the chamfer in cylinder head recess. Put seal on to the tool, smear with grease and place tool in the recess. Two or three sharp taps with a copper hammer are sufficient to drive seal home. Do not fit seals until cylinder head is ready for assembling and do not withdraw a valve once it has been fitted through a seal. As pulling valve stem through seal causes the cotter groove to trap and damage the sharp edge of the seal, it is necessary to fit a new seal whenever a valve is removed.
2. Smear valve stems with a little oil and reassemble with the springs, collars and cotters, using a suitable tool to compress springs and ensuring that valves are fitted in their correct positions.
3. Refit inlet and exhaust manifolds using new gaskets.
4. If the new gasket is copper and asbestos, coat both sides evenly with Wellseal. Allow gasket to dry for five minutes, keeping clear of dirt, then fit on to cylinder block with beaded side of gasket towards cylinder head. If the new gasket is graphite-finished asbestos with tin-plate inserts do not use Wellseal but fit the gasket dry (side marked "Top" towards cylinder head), after ensuring that block and head face are clean.

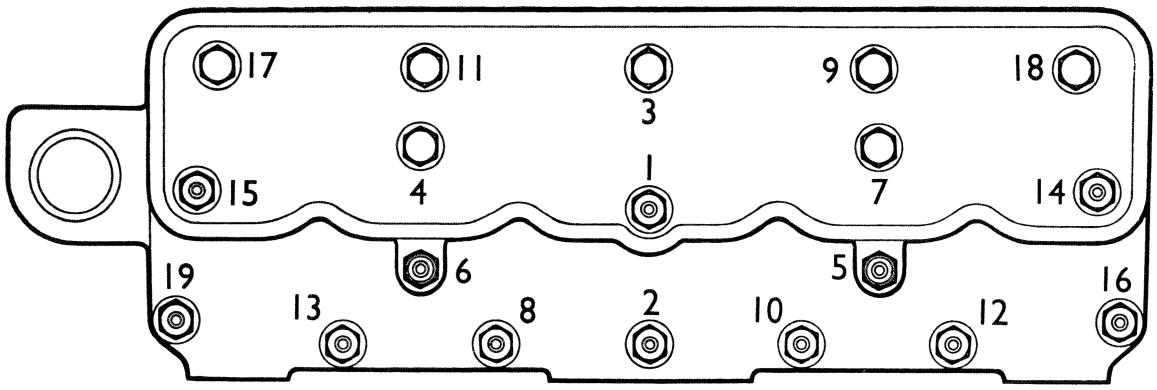

Figure 32. CYLINDER HEAD TIGHTENING SEQUENCE

Tighten the bolts in the order shown and in three stages of 30, 60 and 90 lb ft (4, 8 and 12·5 kg metres)

5. Fit a new by-pass hose and lower cylinder head on to block. Following the tightening sequence shown in Fig. 32, progressively tighten down all head bolts and nuts in stages of 30, 60 and 90 lb ft (4, 8 and 12·5 kg metres).
6. Tighten by-pass hose clips and replace push-rods in their original positions. Ensure that the push-rods are not bent and check that they are correctly seated in the tappets.
7. Refit rocker shaft assembly and rocker lubrication pipe.
8. Oil the rockers liberally and then proceed to set valve clearances. (See Page 2.)
9. Replace injectors, fitting new copper sealing washers. Replace high-pressure injector pipes and leak-off pipe.
10. Replace gasket and rocker cover and then refit breather pipe.
11. Refill radiator, start engine and check for any fuel, oil or water leaks. It is advisable to check tightness of cylinder head bolts and check valve clearances after the engine has been run for half-an-hour.

Pistons and Connecting Rods

The pistons cannot be removed through sump when crankshaft is in position, but by removing cylinder head and bearing caps they can be withdrawn through the top of bores.

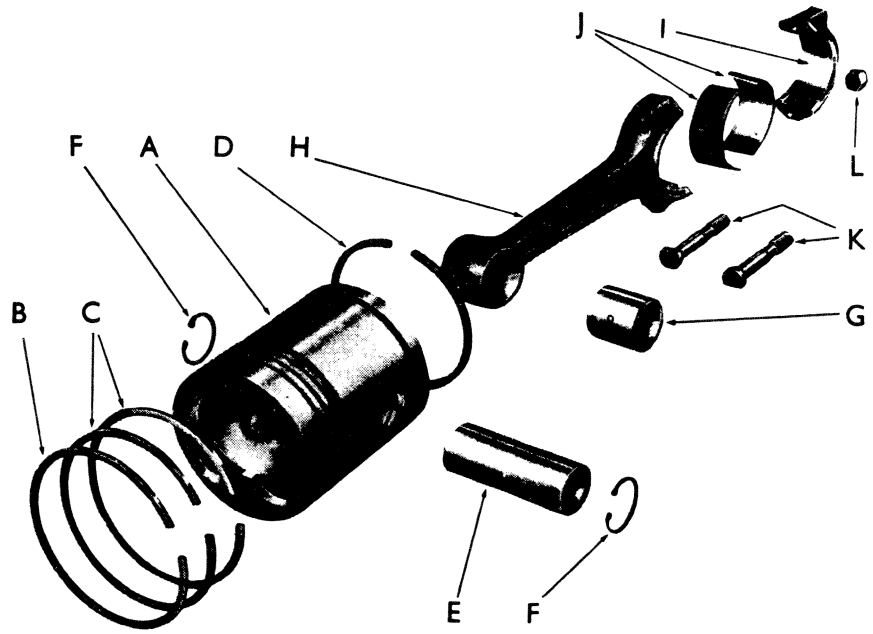

Figure 33. PISTON AND CONNECTING ROD

A. Piston
B. Top compression ring
C. Nos. 2 and 3 compression rings
D. Oil scraper ring
E. Gudgeon pin
F. Circlips
G. Bush — connecting rod
H. Connecting rod
I. Connecting rod cap
J. Big-end bearing shells
K. Connecting rod bolts
L. Self-locking nut

Removing the Pistons

The bearing cap bolts must be removed to prevent possible damage to the bore as the connecting rod is pulled up through the bore. Having removed piston, check that connecting rod and bearing caps are marked and mark piston so that it can be replaced in same cylinder.

Gudgeon Pins

The fully floating gudgeon pins are retained by two circlips, one at each end of the pin, and to remove the gudgeon pin remove both circlips, then immerse piston in hot oil. This will cause piston to expand and allow the pin to be pushed out. Refit pin in same manner using hot oil, then replace circlips, ensuring that they are fully seated in their grooves. When the gudgeon pin has been refitted check that the piston has been replaced in its original position by noting that the valve recesses in the piston crown are towards the same side as the identification mark on the connecting rod.

Connecting Rods

The small end of connecting rod is bushed and this can be replaced if worn. Press out worn bush, using a suitable sized mandrel, and press in new bush, ensuring that oil hole in the bush is opposite hole in the end of connecting rod. Hone, or ream, new bush after fitting until gudgeon pin is a light push-fit.

Connecting rods should always be checked for alignment whenever they are removed and especially if the piston skirt marking is not even. The easiest way of checking connecting rods is by means of a proprietary aligning tool such as is shown in Service Tool Leaflet B5, but if such a tool is not available, mandrels and 'V' blocks can be used.

If connecting rods are not more than 0·010 in./in. (0·1 mm/cm) out of alignment they should be straightened to bring them within the limits shown on Page 35. If a rod is more than 0·010 in./in. (0·1 mm/cm) out of alignment it should not be straightened but must be renewed.

When replacing pistons check that the ring gaps are spaced round piston so that no two are in line, i.e., one above the other. Check that piston is the right way round: valve recesses to camshaft side of cylinder block. Replace piston through top of the bore, using a ring clamp to compress piston rings.

Smear oil on bearing surfaces and replace cap and bolts. Fit new nuts if self-locking ring in nuts can be screwed on to bolts with the fingers, and tighten to specified torque. (See Page 32.)

Pistons and Rings

There are three compression rings and one oil scraper ring on each piston. The top compression ring is plain on early engines, but is chromed on later engines. Numbers 2 and 3 compression rings are of the stepped type; these help to return oil back down the bore as well as acting as compression rings, and must be fitted correctly, i.e., cut-away section uppermost, otherwise oil will be pumped up the cylinder.

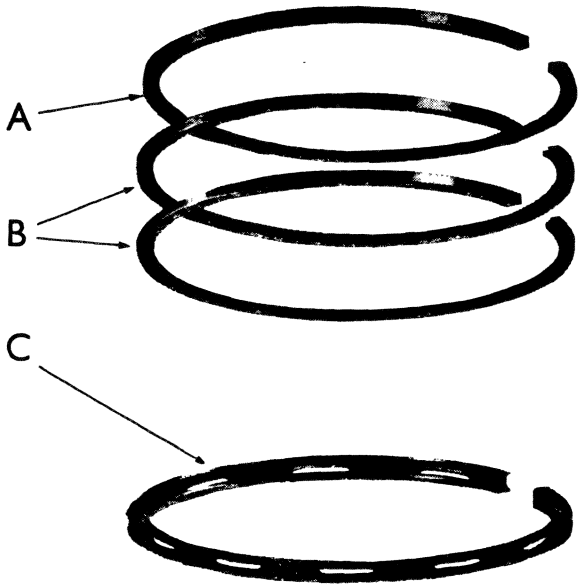

Figure 34. PISTON RINGS

A. Top ring with chrome insert
B. Nos. 2 and 3 stepped compression rings
C. Oil scraper ring

(See Fig. 34.) Number 4 ring is a single-piece cast iron scraper ring. This ring's function is purely to scrape oil down the bore, and the piston is drilled behind the ring to allow oil to pass through the piston skirt and back down to the sump.

After removing carbon from the top, unworn part of the bore, place the rings in position and check piston ring gaps. New rings will be required if the gaps exceed 0·060 in. (1·5 mm). For further guidance on bore wear see Guidance of Wear Limits on

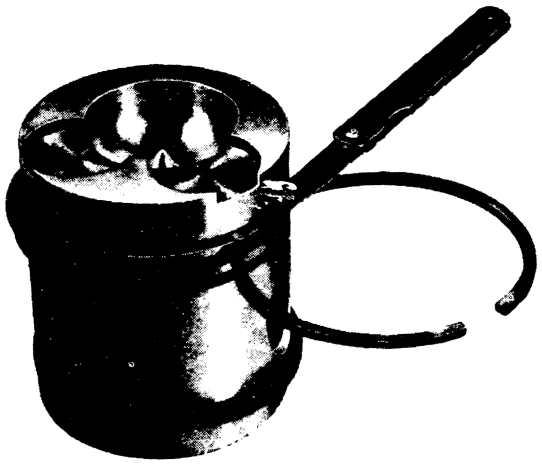

Figure 35. CHECKING PISTON RING GROOVE CLEARANCE

Page 32. Excessive top ring wear may be attributed to the ingress of dusty air, due to lack of air cleaner maintenance, and excessive lower ring wear may be attributed to dirty engine oil, due to infrequent oil and filter changes.

If the cylinder sleeves are worn, but not sufficiently for renewing, oil control rings can be fitted. These sets include special top rings, which have a shoulder at the top so that the rings do not foul the ridge at the top of the bores, and spring-loaded steel scraper rings.

Pistons used with high-lift camshafts have slightly deeper valve recesses and pistons with shallower recesses must not be fitted to engines having a high-lift camshaft as the valve heads would foul the piston.

High-lift camshafts were fitted to engines from

AD4/47A/60390 AD/47B/40725

When fitting new pistons to AD4/47 engines subsequent to the above serial numbers ensure that they are of the later type, otherwise the pistons will foul the valve heads.



Figure 36. CHECKING PISTON RING GAP

Crankshaft and Bearings

Crankshaft Bearings: The shell type crankshaft bearings are steel backed and faced with a thin coating of soft, anti-friction material. The upper and lower big-end shells and the lower main bearing shells are faced with aluminium-tin, but the upper main bearing shells are faced with white metal.

Bearing shells are not interchangeable once they have been fitted and if not renewed must be replaced in their original position.

The bearing caps and shells are very accurately machined and no attempt should be made to file a bearing cap or scrape a bearing. Connecting-rod caps must only be used with their original connecting rods and main bearing caps must only be fitted to their original cylinder blocks.

Crankshaft Regrinding

If crankshaft journals are worn, or scored, the shaft should be reground and suitable undersize bearings fitted. Regrind the shaft journals to the appropriate undersize (see Page 35) and ensure that the correct fillet radii is maintained. A fillet that is incorrectly radiused, roughly finished or not smoothly blended weakens a shaft and may cause fatigue failure during service.

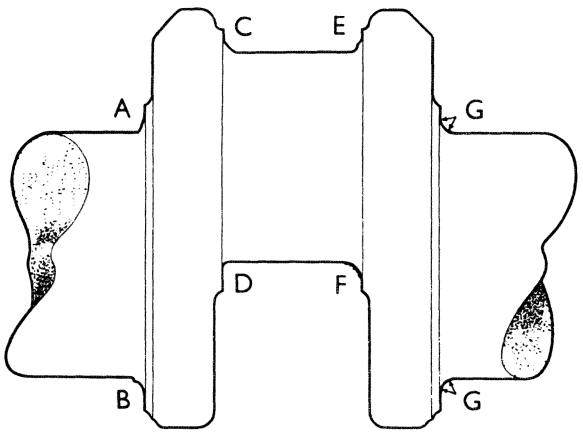

Figure 37. EXAMPLES OF REGROUND FILLET RADII

Incorrect	A.	No radius
	B.	Radius not smoothly blended
	C	Radius too large
	D.	Radius too small
	E.	Radius too small
	F.	Radius roughly finished
Correct	G.	Correct radius smoothly finished and correctly blended

Crankshaft Rear Oil Seal

Oil leaks from the rear of the engine are prevented by an oil flinger on the crankshaft and a removable aluminium oil retainer incorporating a scroll. This retainer, which is in two halves — one half bolted to the block and the other half to the main bearing cap — is now fitted with paper gaskets. The gaskets are slightly oversize and should be trimmed on fitting. It is advisable to apply a gasket sealing compound. The two cap-head screws clamping the two halves of the retainer together and the four setscrews which hold the retainer to the cylinder block should be tightened together to ensure an oil-tight seal.

There is 0·008–0·012 in. (0·20–0·30 mm) clearance between scroll and crankshaft. The scroll must not touch the crankshaft, otherwise oil leakage will take place.

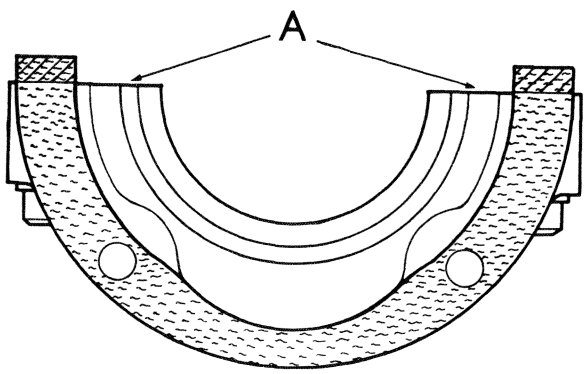

Figure 38. OIL RETAINER GASKET

Temporarily fit the gasket to the retainer and trim each half flush with the retainer face "A", so that when installed the two halves of the gasket will touch but not overlap.

Cylinder Sleeves

The wet cylinder sleeves are sealed at their lower ends by two rubber rings and at their upper ends by the cylinder head gasket. The upper ends of the sleeves have a shoulder which is firmly clamped into a recess in the cylinder block when the cylinder head is bolted in position. The sleeves are a light press-fit in the cylinder block but as the outsides of the sleeves are immersed in the cooling water any build-up of deposit round the lower end of a sleeve will tend to "cement" the sleeve in position. The force required to remove the sleeve may, therefore, be quite high and it is essential that correct equipment is used when removing tight sleeves, otherwise damage to the sleeve or cylinder block may occur.

If the sleeves are worn, or the lower seals are leaking and allowing water to pass into the engine sump, withdraw the sleeves using the sleeve remover (Service Tool 901729). With the extractor pad attached to the centre screw so that the $3\frac{5}{8}$ in. diameter shoulder (the $3\frac{1}{2}$ in. diameter shoulder is for the $3\frac{1}{2}$ in. bore sleeves fitted on AD4/25 engines) is uppermost, tilt the pad on one side and lower the bore until the pad is positioned squarely underneath the sleeve (Fig. 39). Whilst holding extractor pad firmly against lower end of sleeve, lower the centralizer pad — larger diameter shoulder downwards against the sleeve — and tighten the butterfly-nut until sleeve is clamped between thrust pad and centralizer pad. After checking that the thrust pad is held squarely against lower end of sleeve, lower the bridge piece down until side-rod feet rest firmly on cylinder block and run the ratchet down until it comes up against bridge piece. Holding the centre screw stationary with the tommy-bar, operate ratchet handle to pull sleeve out of block.

After removing sleeve, clean all traces of deposit from upper and lower cylinder block registers. If sleeve has been removed with the engine in position clean off any dirt which has fallen on to crankshaft.

Always fit new rubber sealing rings when replacing sleeves and ensure that the sleeve and cylinder block are clean. Thoroughly clean cylinder block recess and

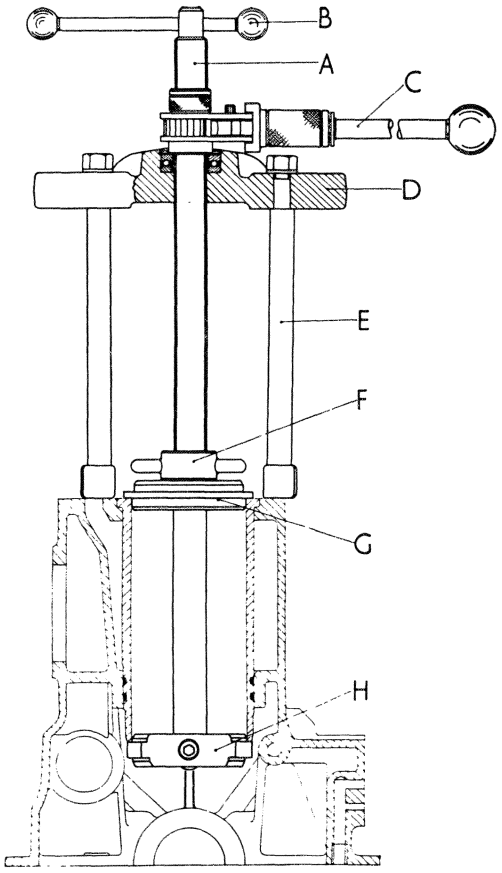

Figure 39. CYLINDER SLEEVE REMOVAL

A. Centre screw
B. Tommy bar
C. Ratchet handle
D. Bridge piece
E. Side rod
F. Butterfly nut
G. Centralizer pad
H. Extractor pad

} Service Tool 901729

carefully fit the rubber seals into sleeve grooves, taking care that the seals are not twisted. Smear underside of sleeve shoulder with Wellseal and apply an even coating of Pressoline No. 2 compound — one part Pressoline (Part No. 900185) mixed with three parts of water — on the seals and lower end of the sleeve.

Push the sleeve into block as far as possible by hand, positioning sleeve so that the flat in the shoulder is in line with the flat in adjacent sleeve. Using sleeve protrusion checking tool (Service Tool 902169), fit the replacer pad on top of sleeve, positioning the pad with the larger diameter recess against the sleeve and the flats in the pad aligned with the sleeve flats.

Attach the press body to cylinder block, using the original cylinder head studs and bolts. Fit the three distance pieces between the body and block and place a flat washer under each nut and bolt. After centring the body so that the ball in the end of pad rests in the dimple at pad centre, tighten the nut and bolts to 90 lb ft (12·5 kg metres).

Tightening the centre screw will push sleeve into block and when the screw has been tightened to a torque of 35 lb ft (4·8 kg metres) check the sleeve

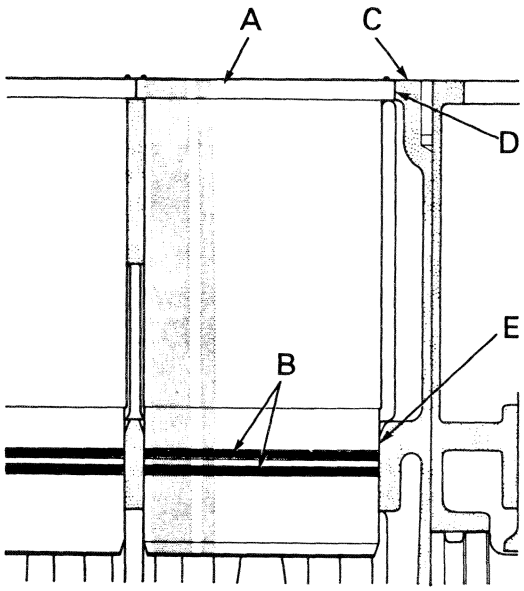

Figure 40. CYLINDER BLOCK AND SLEEVE

A. Sleeve shoulder
B. Sleeve seals
C. Cylinder block face
D. Cylinder block upper register
E. Cylinder block lower register

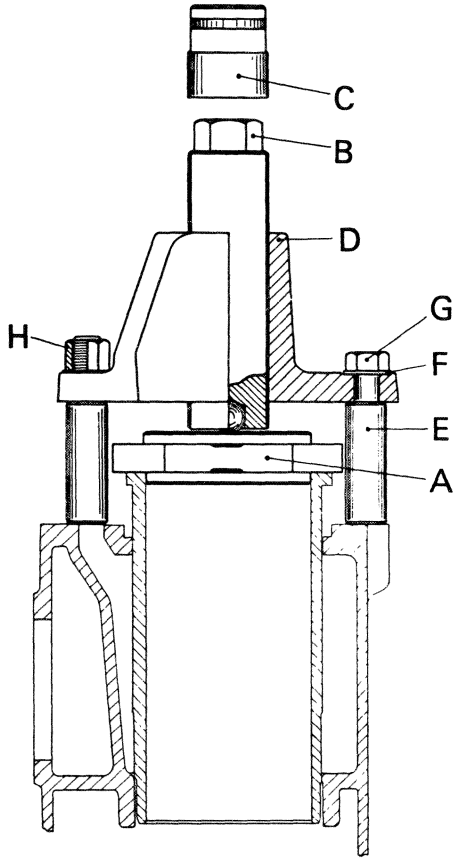

Figure 41. REPLACING CYLINDER SLEEVE

A. Replacer pad
B. Centre screw
C. Socket
D. Body
E. Distance piece
F. Flat washer
G. Cylinder head bolt
H. Cylinder head nut

} Service Tool 902169

protrusion above block face by inserting a feeler gauge between pad and block face. The sleeve and block are machined to give a protrusion of 0·002–0·005 in. (0·05–0·13 mm) and if the protrusion is greater than this the sleeve should be removed and the block recess cleaned as dirt, or carbon, must be preventing the sleeve shoulder from being fully seated.

Remove the tool from block, clean the sleeve and check that the ridge on the top edge of the sleeve has not been damaged during fitting.

Cylinder Block

After stripping the cylinder block, clean out all the oil passages and check that they are clear by blowing through with compressed air. Ensure that the plugs from rear of oil gallery and the oil filter mounting boss are replaced. If the plug is omitted from the oil filter boss (Fig. 21) unfiltered oil will pass into the oil gallery.

Timing Gear

To remove timing-gear cover with engine *in situ* it is advisable to remove the radiator to provide sufficient room for working at the front end of the engine.

Disconnect dynamo mounting and remove fan belt. Before removing crankshaft-pulley bolt, remove valve-rocker cover and turn the engine, using Service Tool 960995, until the valves on No. 4 cylinder are "rocking"; this will assist re-assembly by aligning the gear markings. Remove crankshaft pulley; this is splined on to the shaft and should not be very tight. Withdraw timing case, after removing the bolts. A small quantity of oil will be released when the cover joint is "broken".

Cut the locking wire and remove camshaft-gear bolt: do not allow camshaft to turn when releasing the bolt as a valve head may foul against a piston. Do not remove the three bolts visible through the holes in camshaft gear. These bolts attach the locating plate and if removed will allow the camshaft to move forward and jam against the tappets. The gear is keyed on to a parallel shaft and if tight may be withdrawn by using an extractor such as Service Tool 960901. Do not attempt to remove the gear by striking the end of camshaft with a hammer.

Remove the four bolts from the intermediate gear shaft support bracket, taking care of the shims fitted between bracket and carrier plate. The gear may be slid off the shaft, but the shaft is a push-fit in cylinder block and may be tight. If shaft is too tight to be pulled out by hand it may be extracted by cutting the head off a $\frac{5}{16}$ UNC bolt and threading the bolt shank $\frac{5}{16}$ BSF. The UNC thread can then be screwed into the shaft plug-hole and the BSF thread screwed into the slide hammer, Service Tool 4235A.

Cut the locking wire on injection-pump drive gear and remove the three coupling bolts. Mark position of the coupling and gear then remove the coupling; this will expose the split thrust washer and allow the washer and gear to be removed.

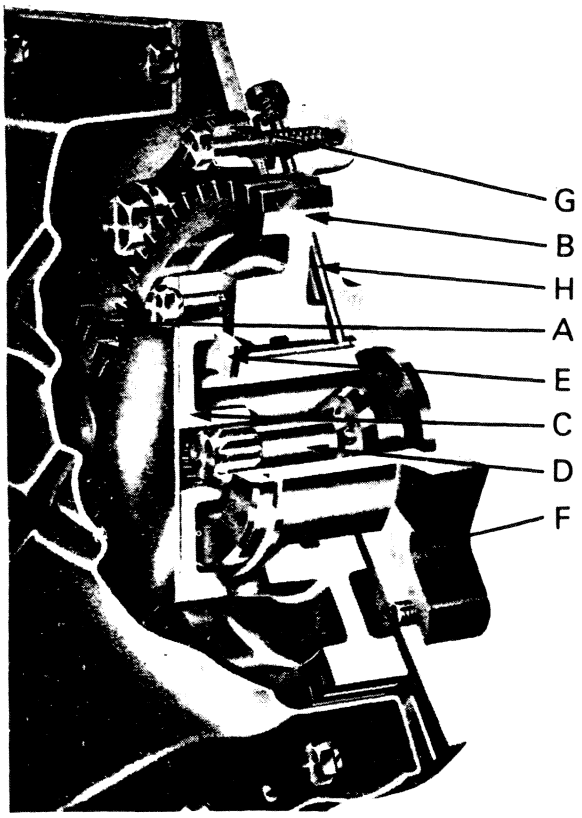

Figure 42.
INJECTION PUMP DRIVE

A. Intermediate gear
B. Drive gear
C. Coupling
D. Quill shaft
E. Thrust washer
F. Support flange
G. Connector
H. Oil feed

The injection pump gear support flange is fitted on the injection pump mounting studs and is attached by two bolts. The upper bolt is fitted on front of carrier plate and passes through a connector which receives oil from the main gallery and lubricates the gear bore through the drillings in the support flange. The bolt attaching the connector to oil gallery incorporates a restricting tube, so that a reduced flow of oil is supplied to the injection pump gear and it is advisable to remove this bolt to ensure that the restrictor is clear and not choked with sludge. Ensure the connector is refitted with the groove against the carrier plate and both bolts are firmly tightened before being wired together.

The crankshaft gear is keyed on the shaft and should not be removed unless it is to be renewed. Using Service Tool 960604, unscrew the extractor bolt so that when the tool is placed over the end of crankshaft the extractor body touches the face of gear. Place the two halves of split ring over the gear and, whilst holding split ring against the body until it is gripped by the chamfer on body shoulder, tighten extractor bolt to draw the gear off shaft.

Replace the gears in reverse order of removal, meshing the gears so that the teeth marks are aligned as shown in Fig. 44.

Smear injection pump gear with anti-scuffing paste before fitting in position. Replace the two halves of thrust washer and refit coupling : note that quill shaft is in position and the two marks on coupling are towards the mark on gear. Fit retaining plate and replace the bolts. Tighten the bolts to 20 lb ft (2·76 kg metres) and wire together. (Fig. 42.)

Smear plugs with Loctite and screw tightly into each end of the intermediate gear before pushing the grooved end of the shaft into cylinder block. Smear the intermediate gear bore with anti-scuffing paste and fit the gear on the shaft — teeth marks aligned and longest side of gear boss to carrier plate. Fit support bracket on to gear shaft and bolt in position, replacing the shims between carrier plate and bracket before fitting the bolts. With the bolts fully tightened insert a feeler gauge between bracket and gear to check the clearance. The gear should have 0·002–0·004 in. (0·05–0·010 mm) end-float and if necessary the bracket should be removed and shims added, or removed, as required.

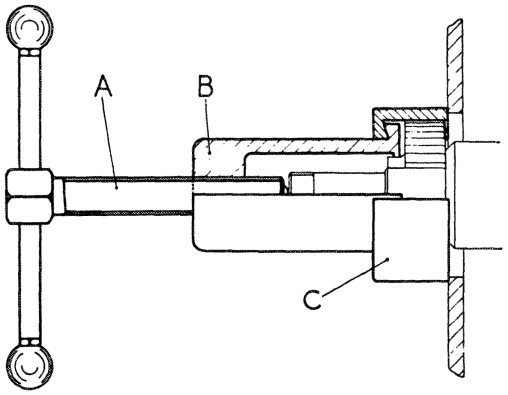

Figure 43. CRANKSHAFT GEAR REMOVER
A. Extractor screw B. Body C. Split ring
(Service Tool 960604)

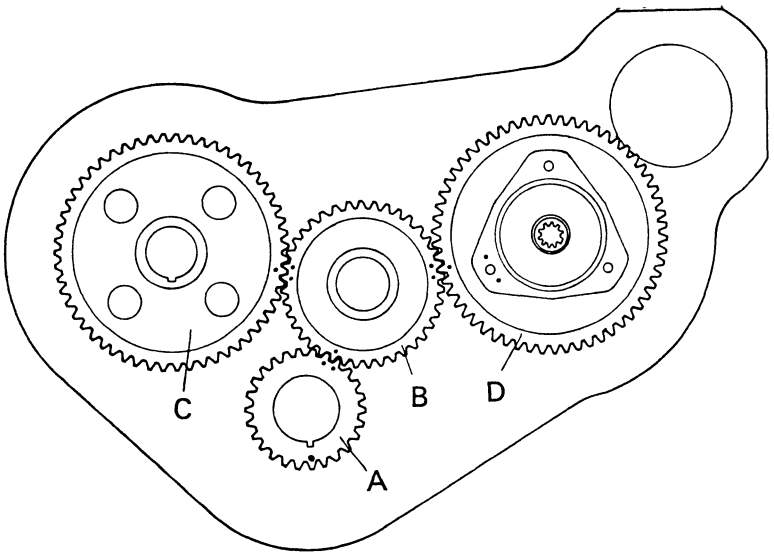

Figure 44.
TIMING GEAR MARKINGS

A. Crankshaft gear
B. Intermediate gear
C. Camshaft gear
D. Injector pump drive gear

Before replacing timing cover, check that gear marks are all correctly aligned and the crankshaft oil flinger, if originally fitted, is replaced. When the face width of crankshaft gear was increased to 1 in. (25·4 mm) the fitting of an oil flinger was discontinued.

Lever the oil seal out of timing case and carefully press in a new seal. Position the seal so that the seal lip points towards inside of case and take care not to distort the seal. Use Service Tools 901700 and 900211.

Fit timing cover in position, using a new gasket, and after screwing the bolts loosely into position fit crankshaft pulley. This will position oil seal centrally over pulley land before the bolts are tightened. Replace crankshaft pulley washer and nut. Refit dynamo and replace fan belt.

Valve Mechanism

The camshaft is fitted from the front of the cylinder block and is retained in position by means of the locating plate behind the gear. As the tappets will fall and jam against the shaft journals when the shaft is moved forward it is necessary to invert the cylinder block or, if the engine is *in situ,* to hold the tappets up with 'O' rings, or spring clips, when removing the shaft. The shaft bearings are pressure fed from the oil gallery and the journals run directly in the cylinder block, the rear journal being drilled to supply a reduced flow of oil to the valve rocker shaft.

High-lift camshaft, Part No. 914673, is fitted to all engines from Nos. A/60390 and B/40725 and may be identified by the part number cast on the shaft between No. 1 cylinder cam lobes. When fitting a new camshaft ensure that this is the same number as originally fitted. A 902050 shaft must not be replaced by a 914673 shaft unless later type pistons (915308) are also fitted, otherwise the valve heads may foul the pistons.

To Rebush Valve Rockers

Remove rocker shaft assembly and place on the bench. Unscrew the brass plugs from the ends of shaft and remove springs, rockers and shaft brackets, placing them in order on the bench.

Press out worn bush and fit new bush, ensuring that oil-hole is opposite hole in rocker. Hone or ream the bush until rocker is free to slide on the shaft.

If rocker end faces are worn, lightly skim on a smooth grindstone, taking care to maintain the original profile. Do not remove more metal than necessary: grind only until the wear mark is almost, but not fully, removed.

Assemble rockers, springs and brackets on to shaft. Fit locating screw into rear bracket, noting that the shaft is positioned with oil-feed holes towards the bottom, then peen the bracket over screw-hole to retain the screw.

Engine Removal

On twelve-speed tractors the engine cannot be lifted out of the frame and the tractor must, therefore, first be "split" so that the clutch is clear of the driveshaft.

On six-speed gearboxes the engine can be lifted from main frame if the muff coupling can be slid far enough forward on clutch driveshaft to clear the gearbox. This is possible on all tractors fitted with the friction-pad type clutch stop and on tractors fitted with the band-type clutch stop from Serial No. 487807. Commencing at this number the width of the clutch-stop drum was reduced to allow sufficient clearance for sliding the muff coupling forward on the driveshaft, but on Livedrive tractors from Nos. 479539 to 487806 the width of the clutch-stop drum prevents the muff coupling from sliding far enough forward to clear the gearbox.

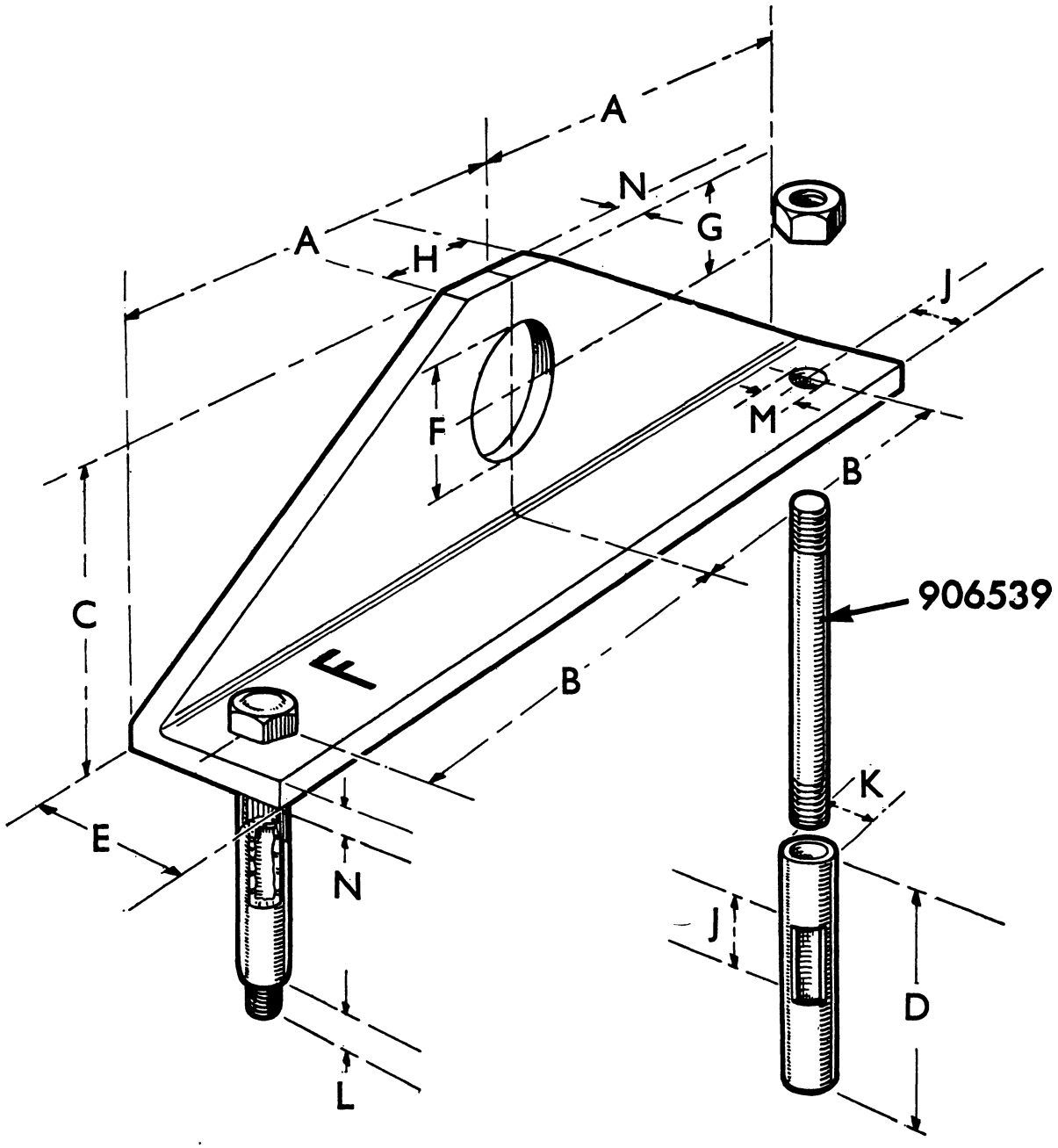

Figure 45. ENGINE LIFTING BRACKET

Nut and distance piece to be welded to stud allowing $\frac{1}{16}$ in. (0·158 cm) clearance between nut and angle bracket

A. 6 in. (15·24 cm)
B. $5\frac{1}{16}$ in. (12·86 cm)
C. 4 in. (10·16 cm)
D. $3\frac{11}{16}$ in. (9·366 cm)
E. $2\frac{1}{2}$ in. (6·350 cm)
F. 2 in. (5·080 cm)
G. $1\frac{3}{4}$ in. (4·445 cm)
H. $1\frac{1}{2}$ in. (3·810 cm)
J. 1 in. (2·54 cm)
K. $\frac{7}{8}$ in. (2·222 cm)
L. $\frac{5}{8}$ in. (1·587 cm)
M. $\frac{9}{16}$ in. (1·428 cm)
N. $\frac{3}{8}$ in. (0·952 cm)

Engine removal procedures may be summarised as follows:

Non-Livedrive Models
All numbers — Lift engine (Method 'A').

Livedrive Models — Six-Speed
Nos. 440001 to 479538 — Lift engine (Method 'A').
Nos. 479539 to 487806 — "Split" tractor (Method 'B').
Nos. 487807 onward — Lift engine (Method 'A').

Livedrive Models — Twelve-Speed
All numbers — "Split" tractor (Method 'B').

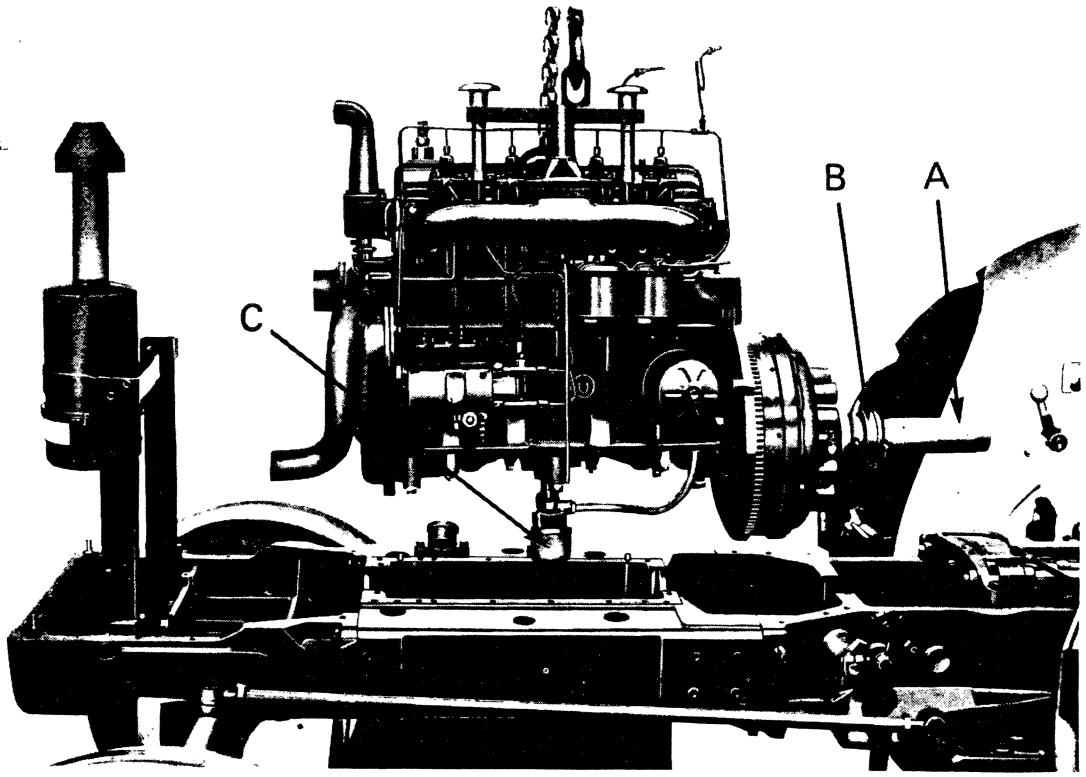

Figure 46. TRACTOR WITH ENGINE REMOVED

A. Muff coupling B. Support snout C. Engine oil pump

Engine Removal — Method 'A'

Remove pre-cleaner, silencer and bonnet. Disconnect battery terminals and main lead to starter. Drain radiator and cylinder block, disconnect hoses and remove radiator. Disconnect throttle and stop-control linkage from injection pump. Remove the fuel pipe from tank to fuel feed pump and remove the short pipe connecting the leak-off to tank.

Disconnect the wiring and tractormeter cable. Remove fuel-tank mounting nuts and remove tank complete with instrument panel.

Remove steering drop-arm from its shaft and remove the steering-box, complete with column and wheel. This will expose the clutch-housing bolts inside the steering-box and enable gearbox cover and clutch housing to be removed.

On Livedrive tractors it is necessary to drain the transmission oil and remove the power take-off unit so that the cardan shaft can be withdrawn clear of clutch driveshaft.

If the tractor is fitted with a band-type clutch-stop remove the pins from each end of the band so that the band can be removed. Release the circlips on clutch driveshaft so that the drum and muff coupling can be slid far enough forward on the shaft to clear the gearbox.

If the tractor is not fitted with a band-type clutch-stop, release the circlip at the front of the muff coupling and slide the coupling fully forwards.

Remove the three bolts attaching the support snout to the axle case and remove the clutch-stop bracket, if fitted. Remove the two figure-of-eight spring clips from clutch fork so that the release bearing can be lifted clear of the fork.

Remove the cylinder-block-to-main-frame bolts (four of these are long bolts fitted from the underside of the main frame) and remove valve rocker cover. Fit a lifting bar (Fig. 45) on to the two cylinder-head lifting nuts, or place suitable slings round the engine, and lift the engine complete with clutch and clutch driveshaft vertically out of the frame. Ensure that the support snout is lifted clear of frame and lift the engine carefully until oil pump is clear of frame.

Replace engine in the reverse order to removal, using new gaskets and seals. Clean main frame and cylinder block faces, ensuring that all traces of the old gasket are removed. Smear main frame face with jointing compound, also both sides of the gaskets before placing them in position. A rubberised jointing compound such as Hylomar (962184) should be used. Fit new bearing-cap seals, pushing ends of seals into holes in block so that seals fit closely in bearing cap grooves.

Two $\frac{3}{8}$ UNC studs temporarily screwed into main frame at opposite points will assist in locating the engine and allow it to be lowered into position without disturbing the gaskets. Note that the clutch shaft is inserted in the clutch, and the support snout and muff coupling are in position on the shaft, before lowering the engine into position.

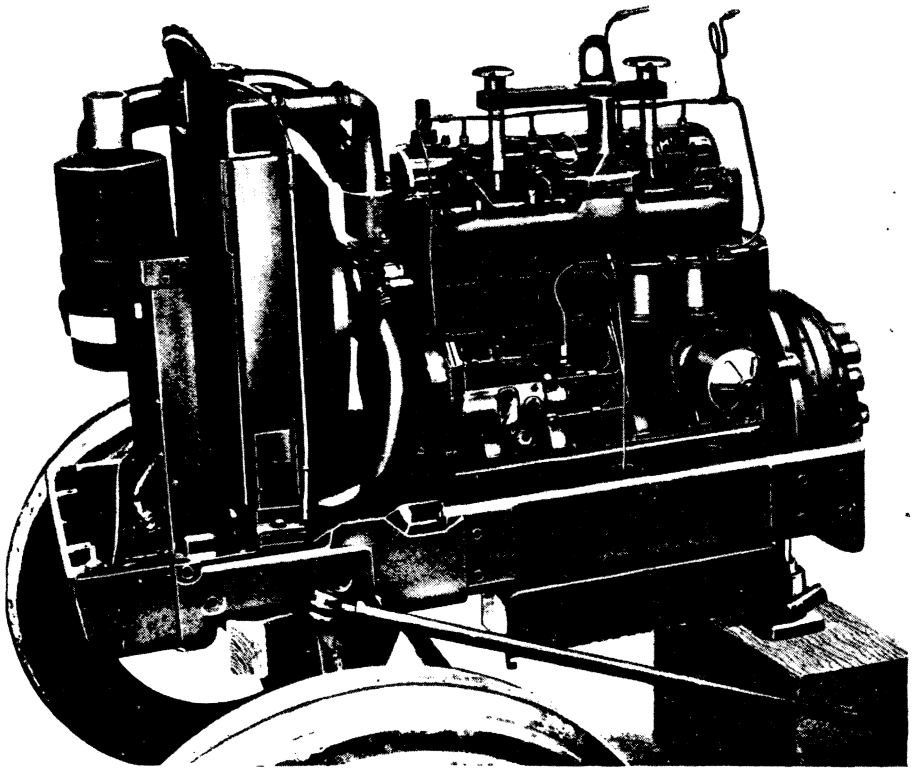

Figure 47. TRACTOR SPLIT FOR ENGINE REMOVAL

When refitting the steering drop-arm on to its shaft ensure that it is fitted on its correct spline, otherwise the steering lock will be restricted on one side. Shafts and arms are marked during assembly and should be refitted so that the centre-punch mark on the arm is opposite the mark on the end of the shaft.

Engine Removal — Method 'B'

As the two halves of the tractor are heavy and require to be maintained in alignment during assembly, this operation should be carried out with the tractor standing on firm and reasonably level ground.

Place a trolley-jack under rear of tractor so that it can support the rear half of tractor when the main frame is "split". Place the jack-pad immediately behind the clutch-pit cover and raise the jack so that it takes weight but does not lift the frame. Drive wooden wedges between each side of the front extension and axle beam so that the engine unit will remain upright when it is not attached to the rear half of tractor. The wedges should be of hard wood and approximately 5 in. (12 cm) long so that they can be driven firmly into position without any possibility of becoming dislodged. Chock the front wheels so that they cannot move either way and place a jack under the front main frame positioned just in front of the rear flange. Extend the jack so that it takes weight but does not lift the frame.

Remove the bonnet and drain radiator and cylinder block. Disconnect throttle and stop-control linkage. Disconnect instrument panel and wiring and tractor-meter cable.

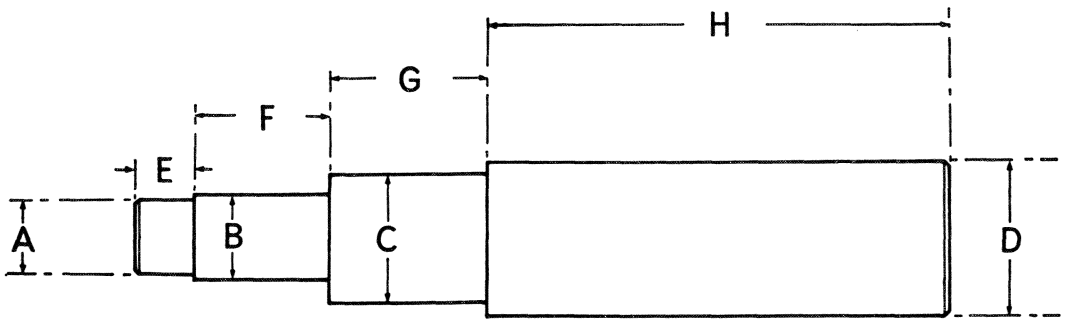

Figure 48. CLUTCH PLATE PILOT

A. 0·874 in. (22·20 mm) B. 0·915 in. (23·24 mm) C. 1·420 in. (36·07 mm) D. 1·771 in. (44·98 mm)
E. $\frac{5}{8}$ in. (15·88 mm) F. $1\frac{1}{2}$ in. (38·10 mm) G. $1\frac{3}{4}$ in. (44·45 mm) H. 5 in. (127 mm)

Remove fuel pipe from tank to feed pump and remove the pipe connecting the leak-off to tank.

Remove steering drop-arm from its shaft. Remove starter and remove bolts attaching the main frame and clutch housing to front half of tractor. Using the two jacks to support the two halves of frame in alignment, draw the rear half away until PTO cardan shaft is clear of the clutch.

Having separated the two halves of tractor, remove the radiator and the cylinder-block-to-main-frame bolts — four of which are on the underside of the main frame. Attach a lifting bar (Fig. 45) to the two cylinder head lifting nuts, or place suitable slings round the engine, and lift the engine vertically until the oil pump is clear of the frame.

Replace engine in reverse order of removal, using new gaskets and seals. Clean main frame and cylinder block faces, ensuring that all traces of the old gasket are removed. Smear main frame face and both sides of the gaskets with jointing compound before placing the gaskets in position. A rubberised jointing compound such as Hylomar (962184) may be used. Fit new bearing-cap seals, pushing ends of seals into holes in cylinder block so that seals fit closely in bearing-cap grooves.

Two $\frac{3}{8}$ UNC studs temporarily screwed into main frame at opposite points will assist in locating the engine and allow it to be lowered into position without disturbing the gaskets.

If the clutch assembly has been removed from flywheel it will be necessary for the clutch plates to be centralised so that the clutch shafts can be entered. When fitting clutch assembly on to flywheel a pilot shaft (Fig. 48) should be used to hold the plates central until the cover bolts are fully tightened.

When refitting the steering drop-arm on to its shaft ensure that this is on the correct spline, otherwise the steering lock will be restricted on one side. Shafts and arms are marked during assembly and should be refitted so that the centre-punch mark on the arm is opposite the mark on end of the shaft.

DIMENSIONAL DATA

Torque Figures

Big-end bearing nuts	50 lb ft	6·92 kg metres
Breather filter cover nut	10 lb ft	1·38 kg metres
Camshaft gear bolt	40 lb ft	5·53 kg metres
Cylinder head nuts and bolts	90 lb ft	12·4 kg metres
Cylinder head studs into block	35 lb ft	4·84 kg metres
Flywheel housing to engine bolts	30 lb ft	4·14 kg metres
Flywheel nuts	50 lb ft	6·92 kg metres
Front extension to main frame bolts	50 lb ft	6·92 kg metres
Fuel Injection Pump:		
Automatic retard fixing bolt	120 lb in	1·38 kg metres
Governor housing nuts (Permanite gasket)	40 lb in	0·46 kg metres
Governor housing nuts (cork gasket)	30 lb in	0·35 kg metres
Head-side fixing bolts	170 lb in	1·96 kg metres
Inspection cover nuts	30 lb in	0·35 kg metres
Inspection pipe banjo bolts	270 lb in	3·11 kg metres
Manual lock fixing bolt	350 lb in	4·02 kg metres
Throttle and stop lever nuts	30 lb in	0·35 kg metres
Main bearing cap bolts	140 lb ft	19·3 kg metres
Main frame to engine bolts	30 lb ft	4·14 kg metres
Main frame to flywheel housing bolts	50 lb ft	6·92 kg metres
Oil filter bowl bolt	10 lb ft	1·38 kg metres
Sump to main frame bolts	20 lb ft	2·76 kg metres
Valve rocker adjusting nuts	14 lb ft	1·94 kg metres

The following figures apply to bolts of standard material with either coarse (UNC) or fine (UNF) threads and may be used for all bolts and nuts not listed in the previous table.

Thread Diameter	Torque	
$\frac{1}{4}$ in	7 lb ft	0·97 kg metres
$\frac{5}{16}$ in	15 lb ft	2·07 kg metres
$\frac{3}{8}$ in	25 lb ft	3·46 kg metres
$\frac{7}{16}$ in	45 lb ft	6·22 kg metres
$\frac{1}{2}$ in	65 lb ft	8·98 kg metres
$\frac{5}{8}$ in	110 lb ft	15·2 kg metres
$\frac{3}{4}$ in	140 lb ft	19·3 kg metres

Capacities

Cooling system	3 gal	12·6 litres
Engine lubricating oil	13 pints	7·4 litres
Steering-box oil	2 pints	1·1 litres
Air-cleaner oil bath	$1\frac{1}{4}$ pints	0·7 litres
Fuel tank	$13\frac{1}{2}$ gal	61·4 litres

Wear Limits

The following figures are only intended to serve as a guide to determine when a component should be renewed:

Crankshaft big-end journals should be reground if ovality exceeds 0·005 in. (0·127 mm).

Crankshaft main-bearing journals should be reground if wear exceeds 0·005 in. (0·127 mm).

Piston rings should be replaced if the ring gap exceeds 0·060 in. (1·524 mm) when checked in the unworn part of the cylinder.

When there is evidence of ring and slight bore wear causing oil consumption, fit oil control rings. These should control oil consumption if the bore wear is not greater than 0·010 in. (0·25 mm) and are available to suit either standard or oversize bores. If oil consumption exists and oil control rings have already been fitted it will be necessary to renew the cylinder liners and pistons.

Piston groove clearance should not exceed 0·010 in. (0·25 mm) when checked with a new ring.

Oversize valves should be fitted if the bore in the cylinder head is worn in excess of 0·006 in. (0·15 mm). For details of oversize reamers and seat cutter pilots see Service Tool Leaflet A28.

Piston Dimensions (new)

Nominal diameter	3⅝ in	92·075 mm
Piston skirt diameter (at right-angles to gudgeon pin bore)	3·619 — 3·618 in	91·93 — 91·91 mm
Piston weight variation (maximum in one set)	½ oz	14 gm
Piston ring side clearance	0·002 — 0·0035 in	0·050 — 0·088 mm
Piston ring gap	0·010 — 0·015 in	0·254 — 0·374 mm
Gudgeon pin diameter	1·2503 — 1·250 in	31·757 — 31·750 mm

(Push-fit in connecting rod bush, light-drive fit in piston)

Sleeve Dimensions (new)

Bore	3·655 — 3·6250 in	92·088 — 92·076 mm
Taper (maximum)	0·0005 in	0·0127 mm
Ovality (maximum)	0·0005 in	0·0127 mm
Protrusion (excluding ridge)	0·002 — 0·005 in	0·0508 — 0·127 mm

Valve Clearance (set cold)

Inlet and Exhaust (to AD4/47A 60389 and AD4/47B 40724)	0·015 in	0·35 mm
Exhaust (to AD4/47A 60389 and AD4/47B 40724)	0·012 in	0·30 mm
Inlet and Exhaust (from AD4/47A 60390 and AD4/47B 40725)	0·010 in	0·25 mm
Exhaust (from AD4/47A 60390 and AD4/47B 40725)	0·007 in	0·18 mm

Valve Springs (inlet and exhaust)

Free length	1·970 in	5·0 cm
Length at 40 lb load	1·530 in	
Length at 80 lb load	1·102 in	
Length at 15 kg load		4·08 cm
Length at 30 kg load		3·15 cm

Valve Stem Diameters (inlet and exhaust)

Standard	0·3732 — 0·3722 in	9·479 — 9·454 mm
Oversize 0·010 in. (0·007 mm)	0·3832 — 0·3822 in	9·733 — 9·708 mm
Oversize 0·020 in. (0·014 mm)	0·3932 — 0·3922 in	9·987 — 9·962 mm
Valve seat angle	45°	45°
Valve guide bore	0·375 — 0·374 in	9·525 — 9·499 mm
Valve tappet diameter	0·624 — 0·623 in	15·850 — 15·824 mm

Valve Timing

Inlet opens	8° before top dead centre
Inlet closes	38° after bottom dead centre
Exhaust opens	36° before bottom dead centre
Exhaust closes	10° after top dead centre

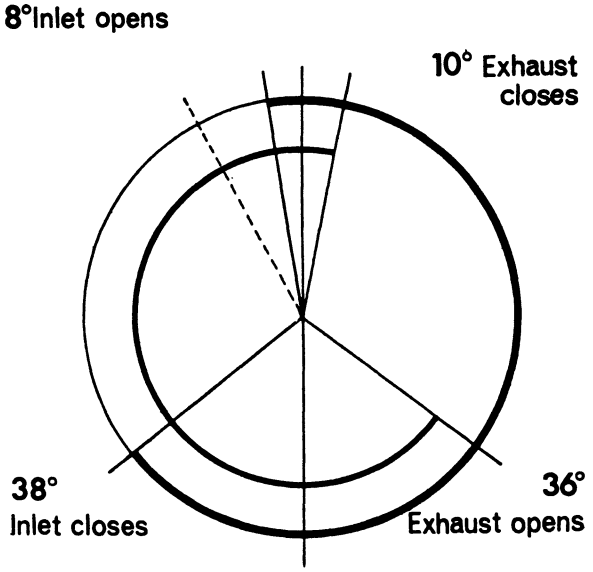

Figure 49. VALVE TIMING DIAGRAM

Fuel System

Injector setting pressure .. .. 175 atmospheres (1810 kg/cm²)
Spill timing (static) .. .. 11° before top dead centre

Spill timing mark: Pump flange and engine mounting flange are marked, and correct pump timing is obtained when these marks are in alignment.

Spill timing adjustment: Elongated holes in the injection pump mounting flange permit the pump body to be rotated when the three securing nuts are released.

Injection Pump Flange Mounting

AD4/47 .. .. 69½° from blank spline when at point of injection

Injection Pump Fuel Setting

AD4/47 .. .. 10·4 — 10·6 cc per 200 shots at 850 rev/min

Injector Nozzle Hole Diameter

AD4/47 .. .. 0·28 — 0·30 mm

Injection Pump and Injectors

Pumps		Injectors		
DB No.	CAV No.	DB No.	Holder	Nozzle
906899 909458	3243090 3243860	904442	BKBL 97S5152	BDLL 140S6276
910521 910521 918912	3243960 3248260 3248680	910530	BKBL 97S5152	BDLL 140S6417

Oil Pump

Spindle diameter	0·4895 — 0·490 in	12·43	— 12·45 mm
Spindle bush bore	0·4905 — 0·4925 in	12·458	— 12·509 mm
Rotor width	1·1865 — 1·1855 in	30·137	— 30·112 mm
Housing depth	1·1890 — 1·1875 in	30·191	— 30·162 mm
End float	0·001 — 0·0035 in	0·025	— 0·088 mm
Pump rotor backlash	0·020 — 0·026 in	0·511	— 0·66 mm

Crankshaft

Main journal diameter		
Standard size	2·4995 — 2·4990 in	63·487 — 63·474 mm
Undersize 0·010 in. (0·254 mm)	2·4895 — 2·4890 in	63·233 — 63·220 mm
Undersize 0·020 in. (0·508 mm)	2·4795 — 2·4790 in	62·979 — 62·966 mm
Undersize 0·030 in. (0·762 mm)	2·4695 — 2·4690 in	62·725 — 62·712 mm

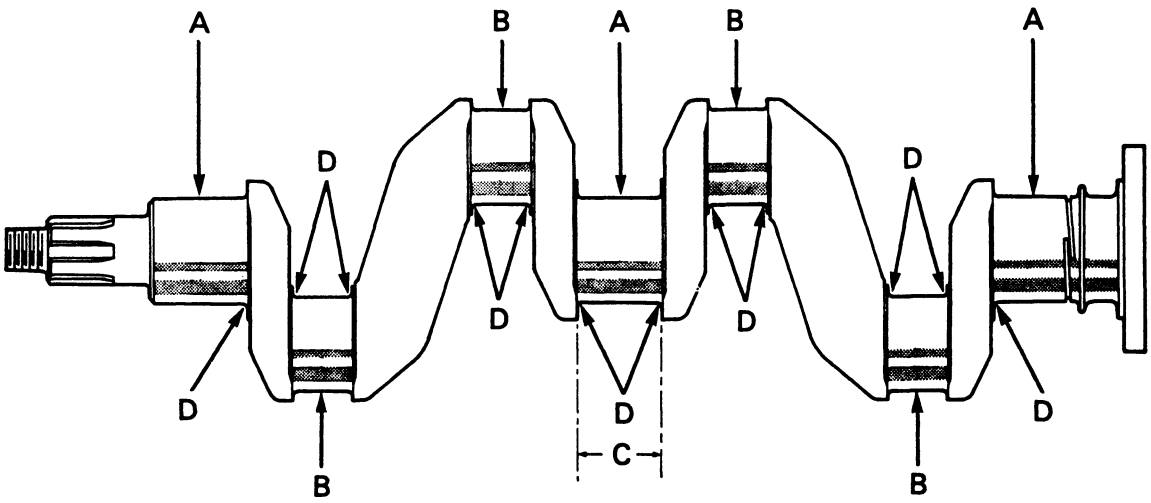

Figure 50. CRANKSHAFT DIMENSIONS

A. Main journal diameters
B. Big end journal diameter
C. Centre journal width
D. Fillet radius

When regrinding crankshaft it is important that the original bearing fillet radius is maintained. It is also important that the surface of the radius is as smooth as the surface of the journal and that the radius is smoothly blended into both surfaces. A fillet that is incorrectly radiused, roughly finished or not smoothly blended, weakens a shaft and may cause fatigue failure during service.

Big-end journal diameter		
Standard size	2·2485 — 2·2480 in	57·111 — 57·099 mm
Undersize 0·010 in.	2·2385 — 2·2380 in	56·848 — 56·845 mm
Undersize 0·020 in.	2·2285 — 2·2280 in	56·604 — 56·591 mm
Undersize 0·030 in.	2·2185 — 2·2180 in	56·350 — 56·337 mm
Centre journal width		
Standard size	2·126 — 2·124 in	54·00 — 53·95 mm
Oversize 0·010 in.	2·136 — 2·134 in	54·254 — 54·204 mm
Oversize 0·040 in.	2·176 — 2·174 in	55·270 — 55·220 mm
Bearing fillet radius	0·16 — 0·15 in	4·06 — 3·81 mm
Big-end bearing clearance.. ..	0·0015 — 0·0025 in	0·038 — 0·063 mm
Main bearing clearance	0·002 — 0·004 in	0·051 — 0·102 mm
End-float of crankshaft	0·002 — 0·010 in	0·051 — 0·258 mm
Thrust Washer thickness		
Standard	0·091 — 0·093 in	2·3114 — 2·3622 mm
Oversize 0·005 in. (0·127 mm)	0·096 — 0·098 in	2·4384 — 2·4892 mm
Oversize 0·020 in. (0·508 mm)	0·111 — 0·113 in	2·8194 — 2·8702 mm

Connecting Rod Alignment

Maximum out of parallel	0·001 in/in	0·01 mm/cm
Maximum twist	0·001 in/in	0·01 mm/cm
Maximum weight variation in set of three rods ..	0·25 oz	7·1 gm

Rocker Shaft

Diameter	0·748	— 0·749	in	18·99	— 19·02	mm
Bush bore reamed in position ..	0·7500	— 0·7505	in	19·05	— 19·06	mm

Compression Pressures

Average pressure obtained when the engine is cranked, by means of the starter motor, with all injectors removed and at an ambient temperature of 20°C (68°F).

Cranking Speed rev/min	Pressure lb/in²	kg/cm²
150	380 — 400	26·6 — 28·0
250	415 — 435	29·0 — 30·5

Camshaft Journal Diameters

Front	1·872	— 1·870	in	47·55	— 47·50	mm
No. 2	1·827	— 1·825	in	46·41	— 46·35	mm
Nos. 3 and 4	1·811	— 1·810	in	46·00	— 45·97	mm
No. 5	1·765	— 1·763	in	44·83	— 44·78	mm
No. 6	1·749	— 1·747	in	44·42	— 44·37	mm
Camshaft thrust washer thickness ..	0·245	— 0·240	in	6·223	— 6·096	mm
Camshaft end-float	0·010	— 0·020	in	0·254	— 0·508	mm

SUMMARY OF DESIGN CHANGES

Details of change	When introduced
Across-flats dimension of crankshaft nut reduced from 1·670–1·658 in. (42·42–42·11 mm) to 1·500–1·488 in. (38·10–37·80 mm). Part No. 623300 unchanged.	AD4/47A/32776 AD4/47B/31181 (July 1962)
Exhaust valve spring (907895) also fitted on inlet valve. The previous inlet-valve spring (905215), which is marked with red paint, is weaker than the 907895 spring and should not be used for replacements.	AD4/47A/31773 AD4/47B/32002 (July 1962)
Length of thread on injection-pump coupling bolts reduced to ½ in. (12·5 mm). Part No. of bolts, 600353, unchanged.	AD4/47A/34476 AD4/47B/31901 (July 1962)
Changes to reduce amount of oil leakage down valve guides. Rocker shaft oil-holes reduced. Part No. of shaft changed from 904192 to 909622, and 30° chamfer machined at top of exhaust valve stem bore.	AD4/47A/34932 AD4/47B/32082 (August 1962)
Position of injection cut-off lever turned through 180° and control rod changed so that operation of engine control stop is reversed, i.e., the engine being stopped when the control is in the forward position. Part No. of pump unchanged but Part No. of stop control rod changed from 908221 to 908524.	AD4/47A/34065 AD4/47B/31734 (September 1962)
Injection pump changed from 906899 (CAV 3243090) to 909458 (CAV 3243860). As the new pump has a slightly different internal timing the pump drive gear marking has been retarded one tooth. Part No. of gear changed from 902006 to 909457. Pumps and gears are interchangeable if the gears are meshed one tooth advanced, or retarded, in order to obtain the correct timing.	AD4/47A/35277 AD4/47B/32248 (September 1962)
Drain-hole drilled in water pump body (902029) to prevent any water which leaks past the gland seal from damaging the bearing and provide a visible indication that the seal is leaking.	AD4/47A/32074 AD4/47B/30917 (January 1963)
Dynamo 35521 (Lucas C39-2) replaced by dynamo 908882 (Lucas C40A). The new dynamo, which is fitted with Lucar connectors, is interchangeable with the previous dynamo if suitable connectors are used.	AD4/47A/36228 AD4/47B/32834 (January 1963)
Fitting of injection pump 909458 (CAV 3243860) discontinued and 906899 (CAV 3243090) re-introduced. Pump drive gear 909457 also changed back to previous gear 902006.	AD4/47A/36230 AD4/47B/32832 (January 1963)
Crankshaft breather changed so that overtightening the nut does not compress the breather element and cause pressure build-up in the crankcase. Parts not interchangeable unless fitted complete.	AD4/47A/37593 AD4/47B/33527 (February 1963)
Injection pump 906899 (CAV 3243090) changed to 910521 (CAV 3243960) and injectors changed from 904442 to 910530.	AD4/47A/43672 AD4/47B/36677 (January 1964)
Timing gear cover changed from cast iron to pressed steel. Part No. of cover changed from 904056 to 910057. Covers interchangeable if the appropriate bolts are used.	AD4/47A/44311 AD4/47B/37572 (July 1964)
Distance piece, Part No. 912812, fitted between water-pump pulley (900476) and fan in order to comply with U.K. safety requirements.	AD4/47A/46417 AD4/47B/37384 (July 1964)

Details of change	When introduced
Oil flinger, Part No. 913369, fitted between the crankshaft gear and pulley.	AD4/47A/46481 AD4/47B/37378 (July 1964)
Gasket, Part No. 914404, fitted between crankshaft oil retainer and cylinder block.	AD4/47A/49989 AD4/47B/37876 (September 1964)
Two $\frac{5}{16}$ in. (7·8 mm) diameter holes drilled through rear main-bearing cap to assist oil drainage into sump when operating on severe gradients.	AD4/47A/51137 AD4/47B/38316 (October 1964)
Length of water-pump pulley-hub increased to make the fitting of distance piece (912812) unnecessary. Part No. of pulley changed from 900476 to 914335.	AD4/47A/57582 AD4/47B/40057 (October 1964)
Injection pump changed from CAV 3243960 to CAV 3248260. Part No. of pump, 910521, unchanged.	(November 1964)
Water pump pulley, Part No. 914335, changed back to 900476. Distance piece 912812 re-introduced on U.K. tractors only.	AD4/47A/60986 AD4/47B/40825 (November 1965)
Camshaft, Part No. 902050, replaced by camshaft 914673, which has higher lift inlet cams. To accommodate the increased valve opening the valve recess in the pistons has been made deeper, the valve heads slightly thinner, and stronger valve springs fitted. With the exception of the camshaft, which must not be fitted unless the other parts are also fitted, the new parts may be used as replacements for earlier engines. The introduction of this change has required a reduction in valve clearances to inlet — 0·010 in. (0·25 mm) — and exhaust — 0·007 in. (0·18 mm).	AD4/47A/60390 AD4/47B/40725 (November 1965)
Retaining plate, Part No. 919660, fitted on fan bolts and bolt-holes in fan blade repositioned, to prevent any possibility of blade fracture.	AD4/47A/68495 AD4/47B/41696 (October 1966)
Face width of crankshaft gear (901989) and intermediate gear (904074) increased to 1 in. (25·4 mm). Part No. of gears changed to 917898 and 917904 respectively. Fitting of a crankshaft oil flinger discontinued.	AD4/47A/69515 AD4/47B/41792 (September 1966)
Injection pump 918912 (CAV 3248680), with direct mounted gear used as an alternative pump to quill-shaft driven pump 910521 (CAV 3248260) on a number of tractors not fitted with power-assisted steering.	AD4/47A/69515 and AD4/47B/41792 to AD4/47A/71241 and AD4/47B/42115 (November 1966)
Tappet cover studs (608206) changed to bolts (600408) and material of tappet cover gaskets (10030) changed from cork/aluminium to cork only.	AD4/47A/71160 AD4/47B/42116 (December 1966)
Material of cylinder head gasket (902040) changed from copper and asbestos sandwich to graphite-surfaced asbestos. Part No. of gasket unchanged. Wellseal should not be used when fitting gaskets of the later material.	AD4/47A/74181 AD4/47B/42612 (January 1967)
Cap nut, Part No. 607516, fitted on the oil pump locating screw (900748) in place of the locknut (607053) fitted previously.	AD4/47A/76496 AD4/47B/42941 (April 1967)

APPROVED LUBRICANTS AND TEST OILS

Classification and Grading of Engine Oils

Several different classifications of engine crankcase oils are in use throughout the world, and therefore the following notes have been compiled to explain the grades and classifications used in the table on Page 42.

Principally there are two important aspects to be taken into consideration when selecting the correct grade of lubricating oil. First is viscosity, which is its body or thickness. Secondly its additive content which determines detergency, control of deposits, resistance to oxidation, film strength and resistance to scuffing.

Viscosity is specified by the SAE number of the oil. The additive content by the A.P.I. classification, or reference to the U.S. Military Service Specification Series MIL-L-2104 or its British equivalent, DEF 2101 Series, from which come the references to Supplement I, Supplement I Endorsement and Series III.

S.A.E. Viscosity Grading (Society of Automotive Engineers)

The Society of Automotive Engineers grades engine oils by viscosity using a system of SAE grade numbers.

Viscosity numbers with an additional symbol "W" are based on viscosity measured at 0°F. Viscosity numbers without a symbol are based on viscosity measured at 210°F.

Note that the SAE grade numbers of gear oils cannot be directly compared with the equivalent grade numbers of an engine oil, i.e. an SAE 80G gear oil may have similar viscosity characteristics to an SAE 20/30 engine oil, or an SAE 90G gear oil may have similar viscosity characteristics to an SAE 40/50 engine oil. Grade numbers of engine oils range from SAE5 to SAE50. To minimise the possibility of confusion, grade numbers of gear oils include the symbol "G" and range from SAE75G to SAE250G.

A.P.I. Classification (American Petroleum Institute)

A system of standards has been evolved to classify the performance characteristics of crankcase oil in accordance with the severity of service for which it is recommended.

Note: A revised system of classification was introduced by the American Petroleum Institute's division of marketing in Autumn 1970. The new A.P.I. system describes in non-technical language, operating conditions for which (to start with) eight different types of lubricating oil are suitable. The system is devised so that new classifications may be added should they be required.

The old classifications will obviously still be quoted in existing literature which can be in use for some time, therefore both systems are quoted below.

Definitions of Service Classifications (Old)

(a). Service DG — Moderate Conditions — Diesel

Service typical of Diesel Engines in any operation where there are no severe requirements for wear or deposit control due to fuel, lubricating oil or to engine design characteristics.

Related load, continuous output, or intermittent operation under normal atmospheric temperature conditions can be considered as normal service requirements for Service DG in the absence of any special design features tending to increase service severity or sensitivity to high sulphur fuels. The lubrication requirements for Service DG are less severe than for Service DM.

(b). Service DM — Severe Conditions — Diesel

Service typical of Diesel Engines operating under severe conditions or using fuel of a type normally tending to promote deposits and wear, but where there are design characteristics or operating conditions which may make the engine either less sensitive to fuel effects or more sensitive to residues from lubricating oil.

Under this service classification, the factors of operating conditions, fuel character, especially sulphur content, and design features combine in various ways to make the service and hence the lubrication requirements less severe than for Service DS. Some designs are critical with respect to lubricating oil residues; for these designs some oils suitable for Service DS are not satisfactory.

Footnote: The characteristics of oil in this rating are similar to Supplement 1 oils I.C.E.I. (Internal Combustion Engine Institute) rating.

(c). Service DS — Extreme Conditions — Diesel

Service typical of Diesel Engines operating under very severe conditions, or having design characteristics, or using fuel tending to produce excessive wear or deposits.

The service requirements in this classification are the most severe encountered in the operation of diesel engines. High-load operation at high temperatures, design factors, especially supercharging or engine installation details causing unusually high temperatures within the engine, constitute severe service, as does intermittent operation at low temperatures, since both promote wear and deposit formation. Cooling system and crankcase ventilating system design, also exhaust line arrangement, can aggravate or minimise the severity in either case. The use of high-sulphur content fuels increases service severity with respect to wear and deposits, depending upon design, maintenance and operating conditions. Hence, frequently their use is considered to constitute severe service, especially in low temperature operation.

Note: The characteristics of oil in this rating are similar to Supplement 3 I.C.E.I. rating or Series 3 "Caterpillar rating" oil.

(d). Service ML — Least Severe Conditions — Petrol

Service typical of Gasoline and other Spark Ignition Engines used under light and favourable operating conditions, the engines having no special lubrication requirements and having no design characteristic sensitive to deposit formation.

This is the least severe condition. It includes moderate speed driving or moderate load operation most of the time, with no severe low or high engine temperature operation. It also includes operation of engines insensitive to sludge, deposit formation, bearing corrosion, wear or fuel characteristics.

(e). Service MM — Moderate Conditions — Petrol

Service typical of Gasoline and other Spark Ignition Engines used under moderate to severe operating conditions, but presenting problems of deposit or bearing corrosion control when crankcase oil temperatures are high.

This is a more moderate service requirement than Service MS. Vehicles powered by engines which are relatively insensitive to deposit formation or wear when operated at high speeds or under heavy loads are included in this service, particularly when using fuels of suitable characteristics. It does not include extensive operation under the severe type of low engine temperature service such as start-and-stop driving or prolonged idling described under Service MS.

(f). Service MS — Severe Conditions — Petrol

Service typical of Gasoline and other Spark Ignition Engines used under unfavourable or severe types of operating conditions, and where there are special lubrication requirements for deposit, wear or bearing corrosion control, due to operating conditions or to engine design or fuel characteristics.

This class of oil also covers operation in extremes of temperature, stop/start or prolonged idling conditions and the resulting crankcase condensation and dilution which causes the formation of sludge, being taken into consideration.

Definitions of Service Classifications (New)

The eight types of oil are separated into two groups :—

"S" series for passenger cars and light trucks.

"C" series for heavier vehicles, farm equipment and stationary plants.

The eight classes are :—

SA — for utility gasoline and diesel engine service. Service typical of engines operated under such mild conditions that the protection afforded by compounded oil is not required. This classification has no performance requirements.

SB — for minimum duty gasoline engine service. Service typical of engines operated under such mild conditions that only minimum protection afforded by compounding is desired. Oils designed for this service provide only anti-scuff capability and resistance to oil oxidation and bearing corrosion.

SC — for 1964 gasoline engine warranty service. Service typical of gasoline engines in 1964–1967 car and truck models operating under engine manufacturers' warranties. Oils designed for this service provide control of high and low temperature deposits, wear, rust and corrosion in gasoline engines.

SD — for 1968 gasoline engine warranty service. Service typical of gasoline engines in cars and trucks beginning with 1968 models and operating under engine manufacturers' warranties. Oils designed for this service provide more protection from high and low temperature engine deposits, wear, rust and corrosion in gasoline engines than SC oils.

CA — for light duty diesel engine service. Service typical of diesel engines operated in mild to moderate duty with high quality fuels. Occasionally has included gasoline engines in mild service. These oils provide protection from bearing corrosion and from high temperature deposits in normally aspirated diesel engines when using fuels of such quality that they impose no unusual requirements for wear and deposit protection.

CB — for moderate duty diesel engine service. Service typical of diesel engines operated in mild to moderate duty, but with lower quality fuels which necessitate more protection from wear and deposits. Occasionally has included gasoline engines in mild service. Oils designed for this service were introduced in 1949. Such oils provide necessary protection from bearing corrosion and from high temperature deposits in normally aspirated diesel engines with high sulphur fuels.

CC — for moderate duty diesel and gasoline engine service. Typical of lightly supercharged diesel engines operated in moderate to severe duty and has included certain heavy-duty, gasoline engines. Oils designed for this service were introduced in 1961 and used in many trucks and in industrial and construction equipment and farm tractors. These oils provide protection from high temperature deposits in lightly supercharged diesels and also from rust, corrosion and low temperature deposits in gasoline engines.

CD — for severe duty diesel engine service. Service typical of supercharged diesel engines in high-speed, high output duty requiring highly effective control of wear and deposits. Oils designed for this service were introduced in 1955, and provide protection from bearing corrosion and from high temperature deposits in supercharged diesel engines when using fuels of a wide quality range.

APPROVED LUBRICANTS

WORLD WIDE - EXCEPT BRITISH ISLES

Lubricants

Application	A.P.I. Classn.*	Air Temp.	GRADE Recomm.	GRADE Alternative	AMOCO	B.P.	CASTROL	ESSO	MOBIL	SHELL
Engine and Air Cleaner	DG, MS, DM (CB)	Below —7°C (20°F)	Multi-purpose 10W/30	SAE 10W	AMOCO HD — M Engine Oil 10W – 30	Tractor Oil Universal	Agricastrol Multi-use 10W/30	Esso Tractorlube Universal 10W/30	Mobiloil Special 10W/30	Rotella M Multigrade 10W/30
	DG, MS, DM (CB)	—7°C to 32°C (20°F to 90°F)	Multi-purpose 20W/30 or 20W/40	SAE 20W	AMOCO HD – M Engine Oil 20W – 30	Tractor Oil Universal	Agricastrol Multi-use 20W/30 or 20W/40	Esso Tractorlube Universal 20W/30	Mobiloil Special 20W/40	Rotella M Multigrade 20W/40
	DG, MS, DM (CB)	Above 32°C (90°F)	Multi-purpose 20W/30 or 20W/40	SAE 30						
Details of Alternative Grade Oils			SAE 10W		AMOCO HD – M Engine Oil 10W	Vanellus SAE 10W	Castrol CRI10 or Agricastrol 10	Essolube HD 10W	Mobiloil 10W or Delvac Oil 1110	Rotella S 10W
			SAE 20W		AMOCO HD – M Engine Oil 20–20W	Vanellus SAE 20W	Castrol CRI20 or Agricastrol 20	Essolube HD20	Mobiloil Arctic or Delvac Oil 1120	Rotella S 20/20W
			SAE 30		AMOCO HD – M Engine Oil 30	Vanellus SAE 30	Castrol CRI30 or Agricastrol 30	Essolube HD30	Mobiloil A or Delvac Oil 1130	Rotella S30

Engine oil: Under normal operating conditions the engine oils should be marked with viscosity grade and API classification as shown in the above table. Oils marked with service classification DM (CB) are recommended when one or more of the following conditions is present:—abnormally high operating temperatures, intermittent operation at low temperatures or fuel contains more than 1% sulphur. Service DS (Series 3) (CC–CD) oil is not listed as it has super-detergent qualities which are not considered essential for D.B. tractor engines operating in normal field conditions.

Air cleaner: All M and D (SA–SB) classifications with the exception of DS are recommended for use in oil-washed air cleaners fitted to D.B. tractors. DS (CC–CD) is not recommended due to its frothing characteristics. Where possible a straight mineral oil should be used as an alternative to engine oil to avoid frothing.

**New Classifications shown in brackets.*

Fuel, Grease and Anti-Freeze

Diesel fuel: For temperature above 0°C (32°F) use No. 2D fuel (ASTMD 975) with a minimum cetane rating of 45.

For temperature below 0°C (32°F) use No. 1D fuel (ASTMD 975) with a minimum cetane rating of 50.

Note: For low temperature operation a fuel with a pour point 6°C (10°F) below lowest starting temperature should be specified. Fuels with not more than 0·5% by weight sulphur should be used when available. A high sulphur content fuel requires an engine lubricating oil with high detergent characteristics to prevent carbon build up in the nozzles and combustion chambers and to neutralise the acid created by sulphur.

Greasing points: A good quality multi-purpose grease should be applied to all grease fittings (except water pump which requires a high-melting-point grease applied sparingly every 500 hours). High-melting-point grease may be used for all fittings except those which require oil.

Anti-freeze solutions for engine coolant: Use only a brand formulated for use in diesel engines to British Standard 3151 (1959) type B (or equivalent) which specifies a corrosion inhibited ethanediol anti-freeze. (Sodium benzoate and sodium nitrite inhibited.)

BRITISH ISLES

Lubricants

APPLICATION	GRADE Recommended	Alternative	AMOCO	B.P.	CASTROL	ESSO	MOBIL	SHELL
Engine & Air Cleaner	Multi-purpose Oil	20/20W	AMOCO 100 Engine Oil 20W–30 or Vitamatic Engine Oil 20W–30	Tractor Oil Universal	Agricastrol Multi-use	Esso Tractorlube (Universal)	Mobiland Universal	Tractor Oil Universal
Alternative Grade Oils	20/20W		AMOCO 200 Engine Oil 20–20W	Energol DD 20W	Castrol CRI20 or Agricastrol 20	Essolube HD20	Mobiloil Arctic or Delvac Oil 1120	Rotella S 20/20W

Fuel Grease and Anti-freeze

Diesel fuel: Farm diesel fuel of high quality is recommended for use in David Brown engines. Fuels with not more than 0·5% by weight sulphur should be used when available. A high sulphur content fuel requires an engine lubricating oil with high detergent characteristics, to prevent carbon build up in the nozzles and combustion chambers, and to neutralise the acid created by sulphur.

Greasing points: A good quality multi-purpose grease should be applied to all grease fittings (except water pump which requires a high-melting-point grease applied very sparingly every 500 hours). A high-melting-point grease may be used for all fittings except those which require oil.

Anti-freeze solution for engine coolant: Use only a brand formulated for use in diesel engines to British Standard 3151 (1959) type B (or equivalent) which specifies a corrosion inhibited ethanediol anti-freeze. (Sodium benzoate and sodium nitrite inhibited.)

Fuel Injection Equipment Test Oils

New oils made from a refined mineral oil with the addition of oxidation and corrosion inhibitors have recently been introduced for use when testing fuel injection equipment.

The oils previously approved have therefore been superseded by the new oils as follows:

Previously Approved	New Recommendation
Shell — Fusus 'A' Oil	Shell Calibration Fluid 'C' (obtainable in the U.K.) Shell Calibration Fluid 'B' (obtainable overseas)
Esso — TSD Oil 815	Esso — Calibration Fluid IL/1838
Wakefield — Calibration Oil 8327	Castrol — Calibration Oil 'C'

Note: As Shell Fusus 'A' Oil does not now include a viscosity control but will still be available for other industries, e.g., for use as a burning or drying oil, **it is important that Fusus 'A' Oil is not now used as a test oil.**
The two Shell grades 'B' and 'C' are interchangeable.

SERVICING THE MODEL 3LD TURBOCHARGER

CASE CORPORATION

Rac 9-45941

PRINTED IN U.S.A.

TABLE OF CONTENTS

Specifications and Special Torques 3

Special Tools 4

Turbocharger Removal 5

Turbocharger Disassembly 7

Inspection After Disassembly 10

Turbocharger Reassembly 12

Turbocharger Installation 15

SPECIFICATIONS

	Decimal System	Metric System
Turbine Shaft End Play	.004" to .008"	.102 to .203mm
Seal Ring Groove Width	.066" to .070"	1.676 to 1.778mm
Bearing. O.D.	.8714" to .8719"	22.134 to 22.146mm
Bearing I.D.	.4815" to .4818"	12.230 to 12.238mm
Thrust Bearing Width (Minimum)	.104"	2.64mm
Bearing Housing Bore for Seal Rings	.875" to .877"	22.225 to 22. 276mm
Compressor Insert Bore	.875" to .877"	22.225 to 22.276mm
Turbine Shaft Dia. at Bearing	.4803" to .4799"	12.200 to 12.190mm

SPECIAL TORQUES

Compressor Wheel Locknut	13 ft. lbs.
Compressor Cover Capscrews	5 ft. lbs.
Turbine Housing Clamp Band	10 ft. lbs.

SPECIAL TOOLS

Torque Wrench
Dial Indicator
Internal Snap Ring Pliers

SPECIAL TOOLS

Internal Snap Ring Pliers

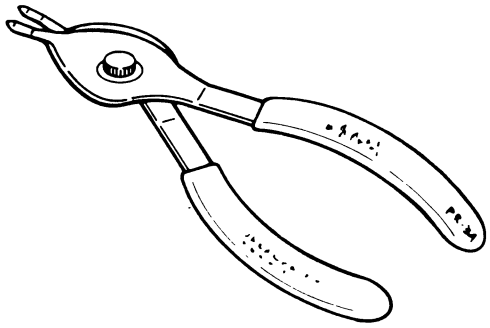

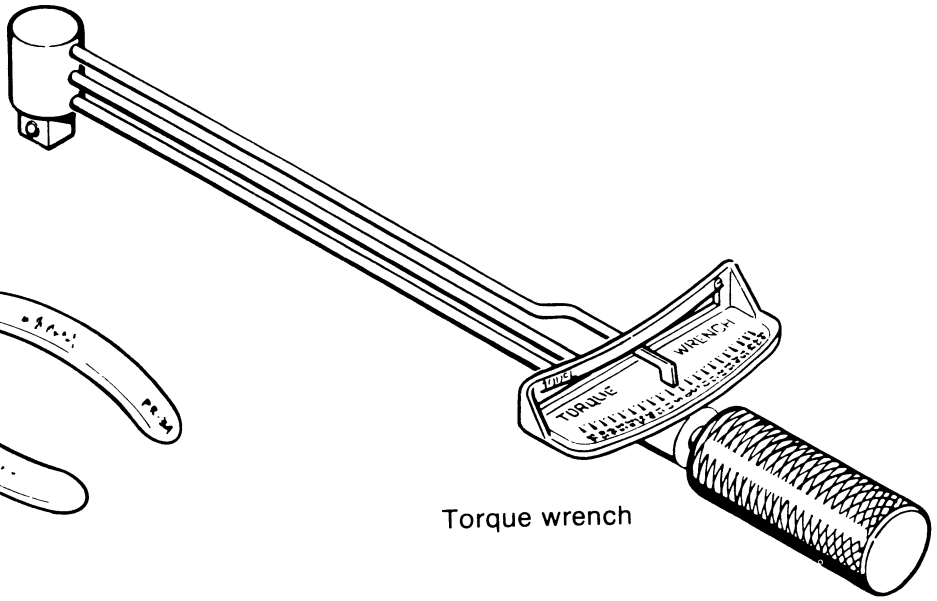

Torque wrench

When servicing the 3LD turbocharger, refer to Section 2565 9-78235. This clearly illustrates the causes of turbocharger failures and should be used in cooperation with this publication.

Dial Indicator

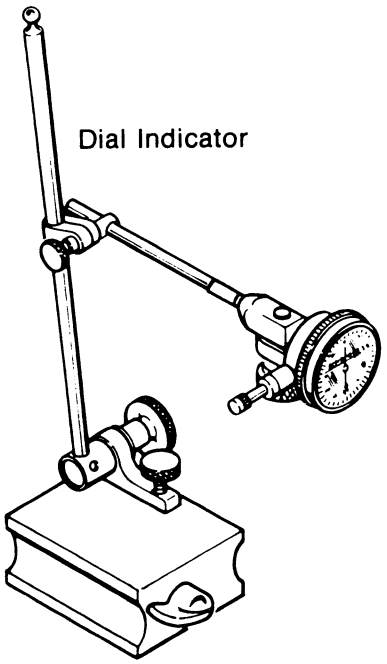

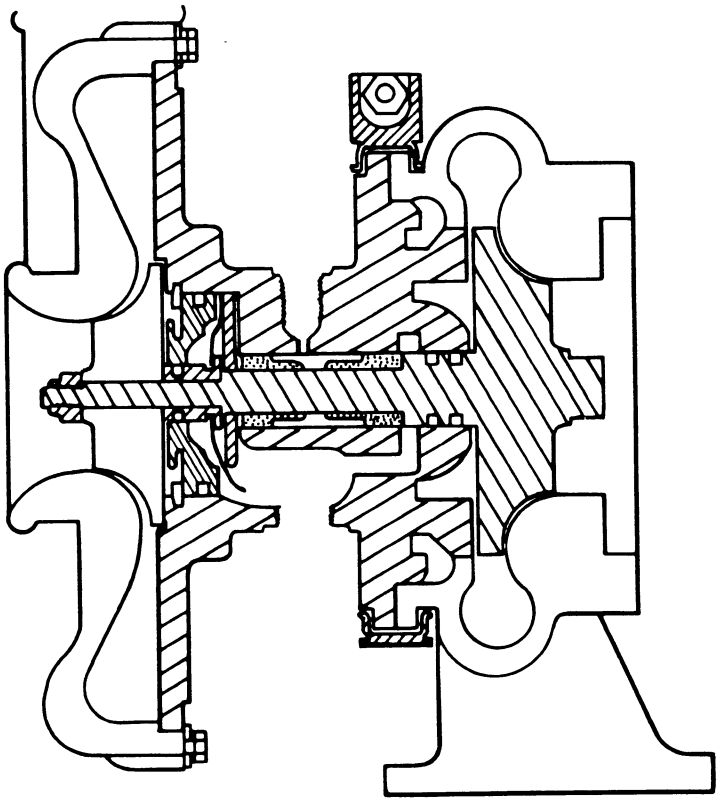

STEP 1

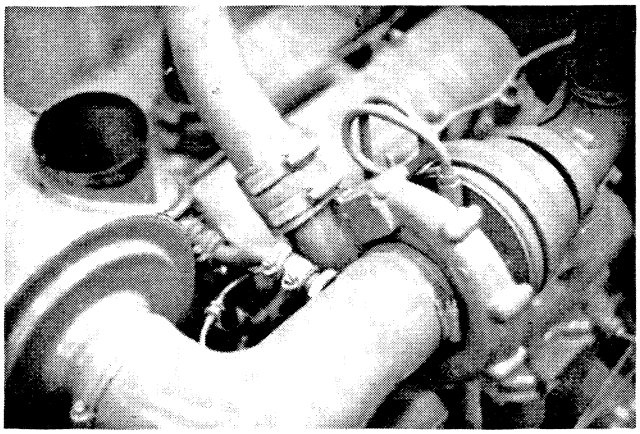

Remove the hood and steam clean around turbocharger and intake hoses, etc.

STEP 2

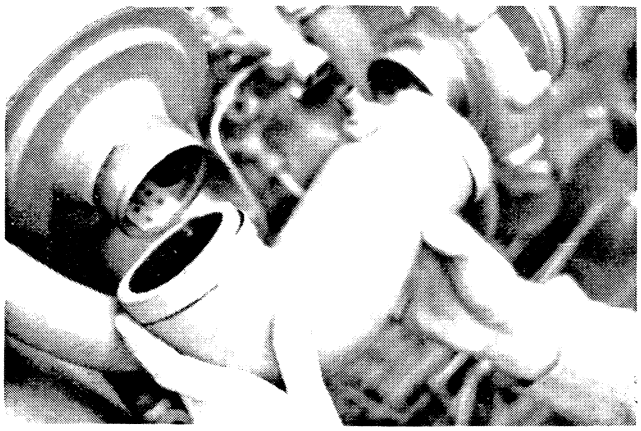

Remove the intake hose after loosening the clamps.

STEP 3

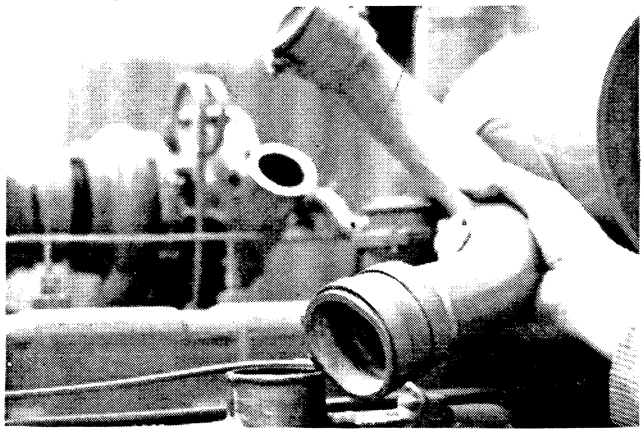

Loosen the hose clamps and remove the induction elbow-turbo to intake manifold. (Cover the manifold to prevent dirt entry.)

STEP 4

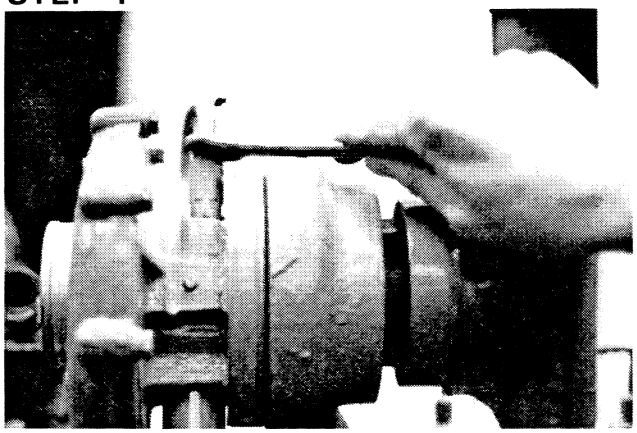

Loosen the oil supply line compression fitting at the turbocharger and gently bend the line up clear of the connection fitting.

STEP 5

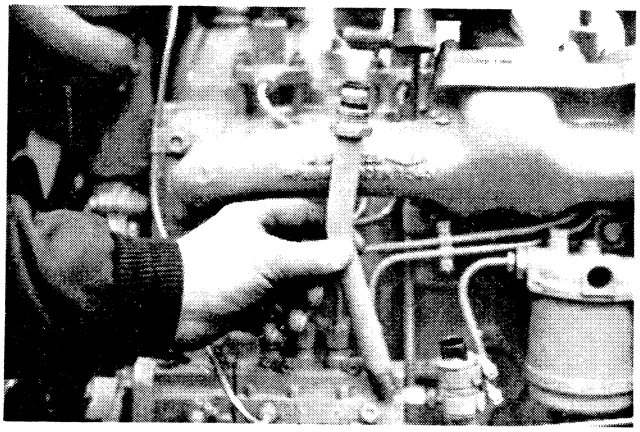

Loosen the hose clamps on the oil return line center connection. Slide the hose down onto the lower half of the line. Loosen the top compression nut and remove the top half of the line.

STEP 6

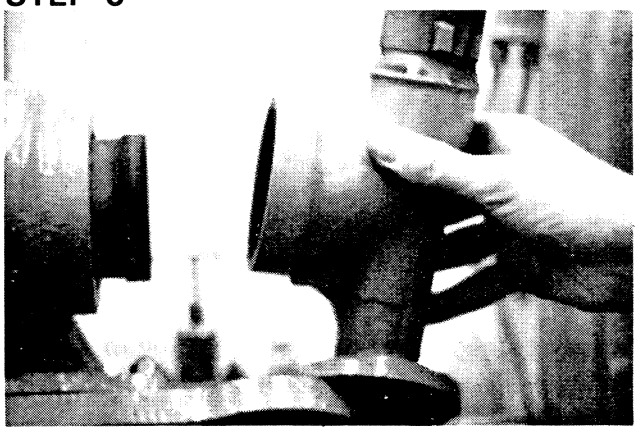

Remove the three bolts securing the exhaust pipe at the manifold and remove the exhaust elbow.

STEP 7

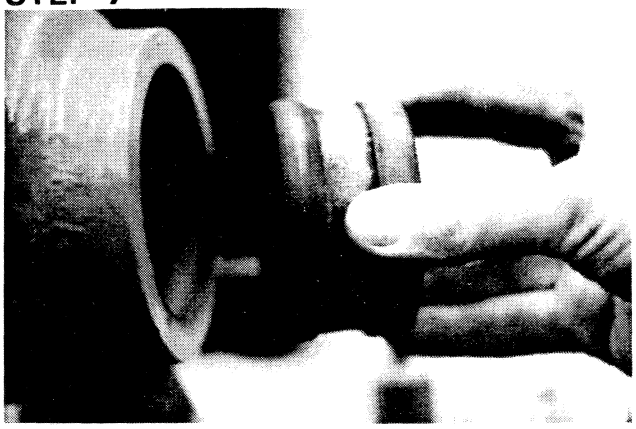

Remove the cast ring coupling that is between the turbo and the exhaust pipe.

STEP 8

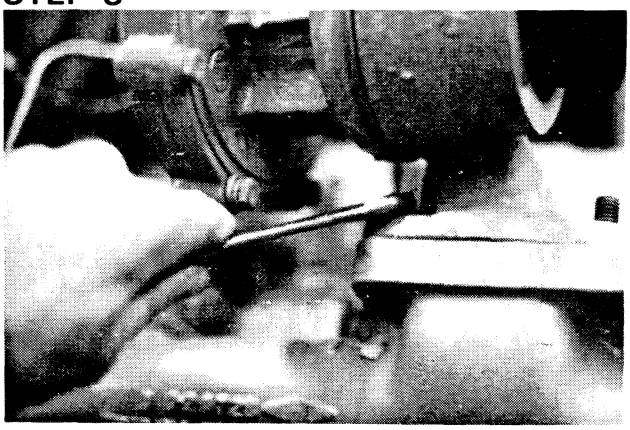

Remove the turbocharger flange nuts.

STEP 9

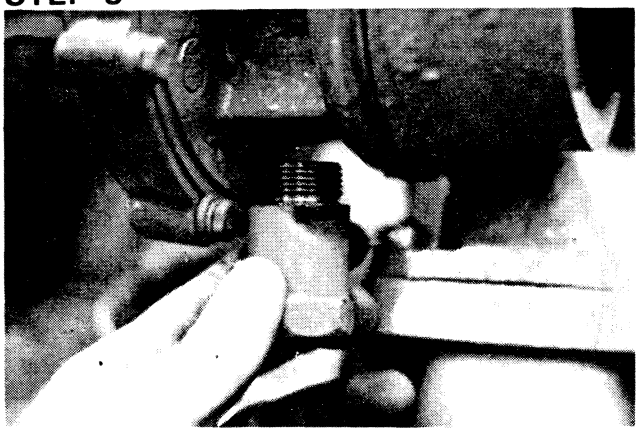

It may be necessary to remove the return oil line fitting to allow a wrench to be used on the front left-hand nut.

STEP 10

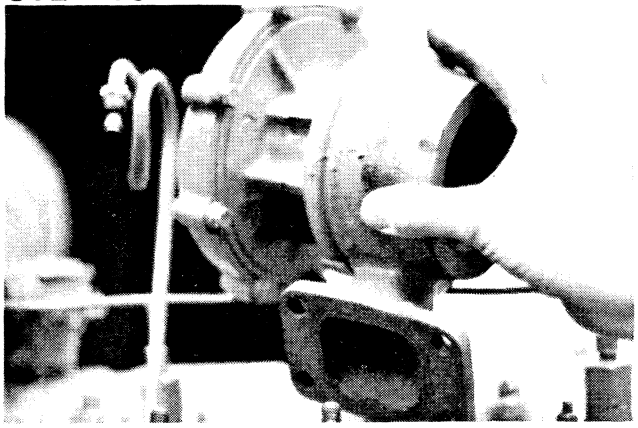

Remove the turbocharger complete. Examine all the induction components for dirt and oil presence.

STEP 11

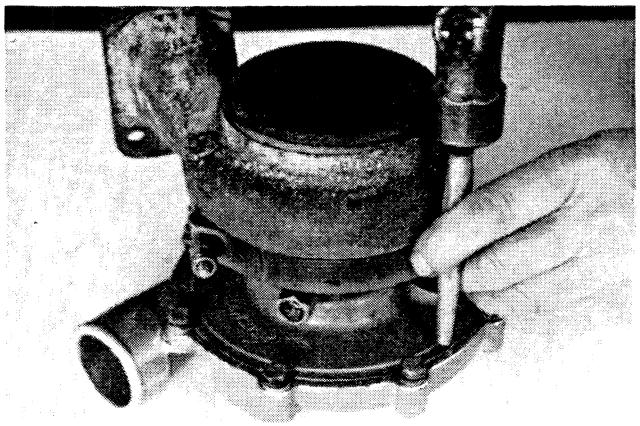

Mark position of each housing, so they can be returned to their original position.

STEP 12

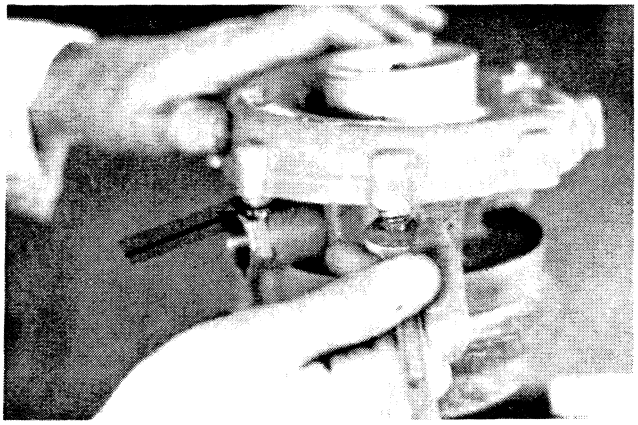

Remove eight special capscrew, lockwashers and retaining plates. It may be necessary to turn the compressor housing to remove all the bolts.

STEP 13

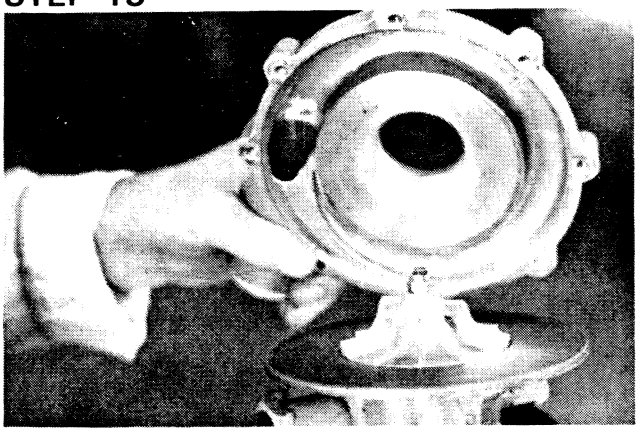

Remove compressor housing.

STEP 14

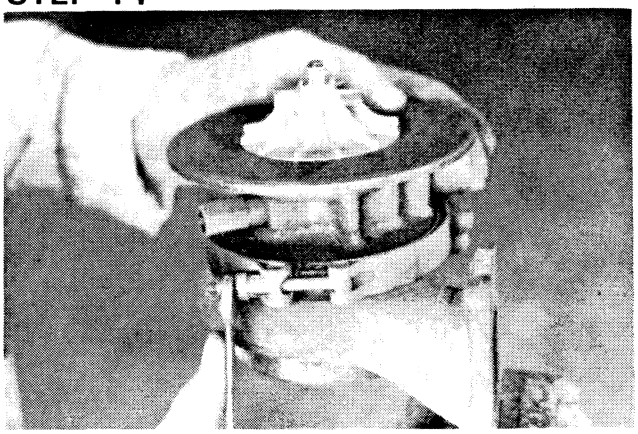

Loosen the V clamp holding the turbine housing in place.

STEP 15

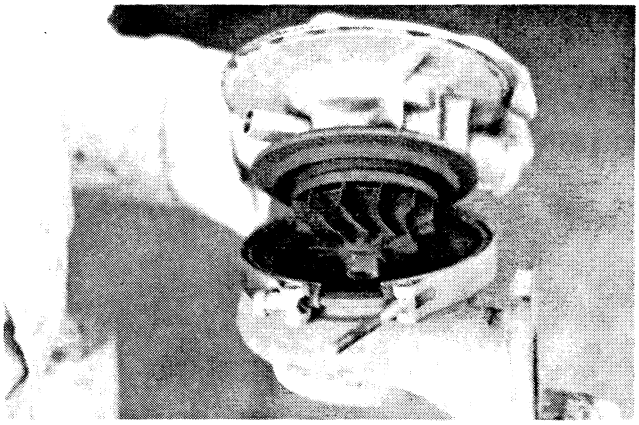

Remove the center bearing housing from the turbine housing and lay the bearing housing carefully on the bench. Remove the turbine housing from the vise.

STEP 16

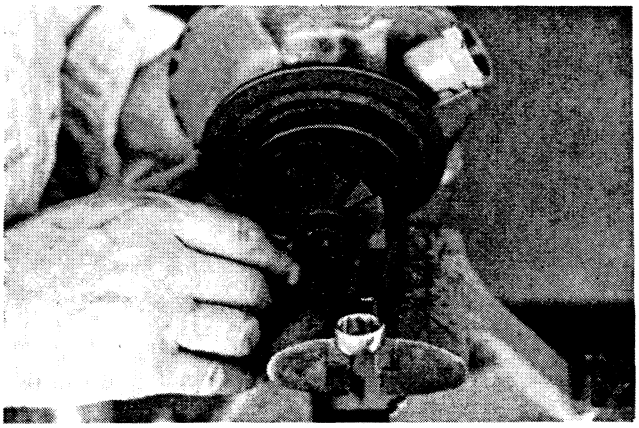

Clamp a 5/8" A.F. box end wrench in the vise, as shown.

STEP 17

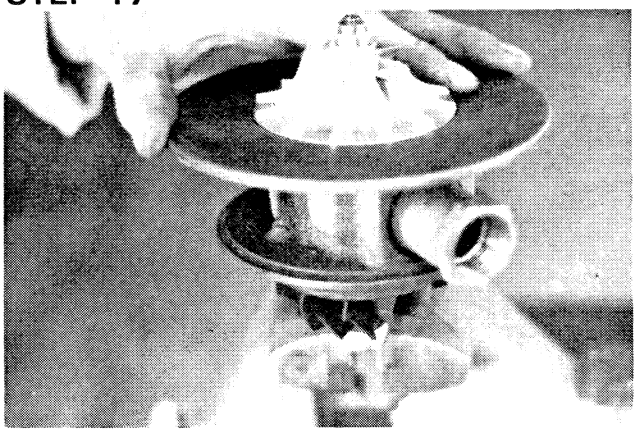

Stand the center housing up in the box end wrench, being careful not to damage the turbine fins.

STEP 18

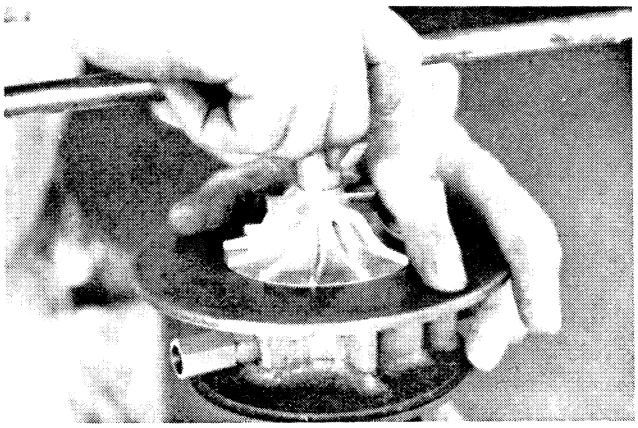

Using a 1/2" wrench, loosen the locknut, and remove.

STEP19

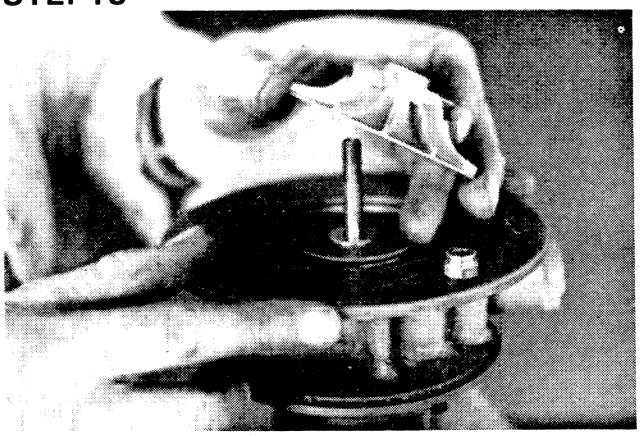

Carefully remove the compressor wheel.
IMPORTANT: ***When the nut is removed, the shaft is free to fall out of the center bearing housing.***

STEP 20

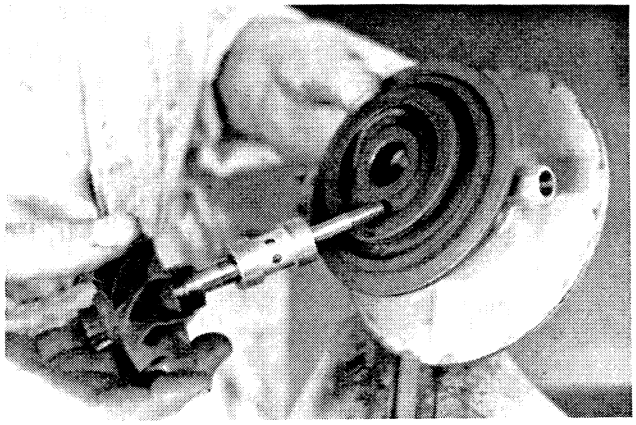

Remove shaft and turbine from the central bearing housing.

NOTE: ***The bearing may come out with the shaft or remain in the housing.***

STEP 21

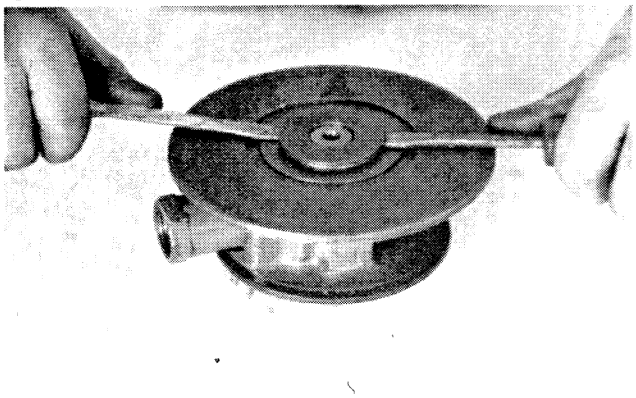

Remove snap ring and pry up gently on the compressor insert.
NOTE: ***Resistance may be felt as the O ring around the compressor insert passes the snap ring groove.***

STEP 22

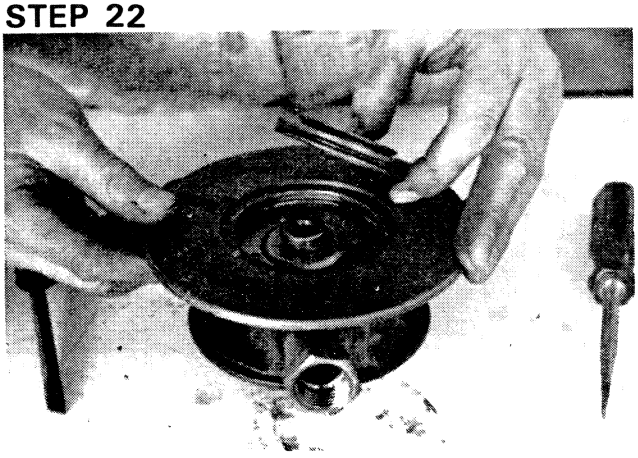

Remove the insert.

STEP 23



Remove the flinger sleeve, which may have remained in the insert bore or in the housing.

STEP 24

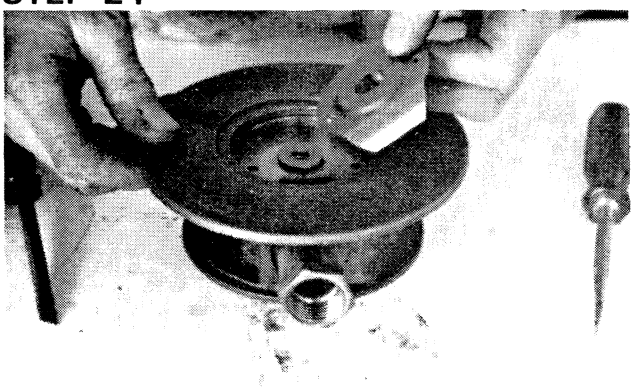

Remove the oil deflector.

STEP 25



Remove the thrust washer.

STEP 26



Remove the thrust bearing. plate.

STEP 27

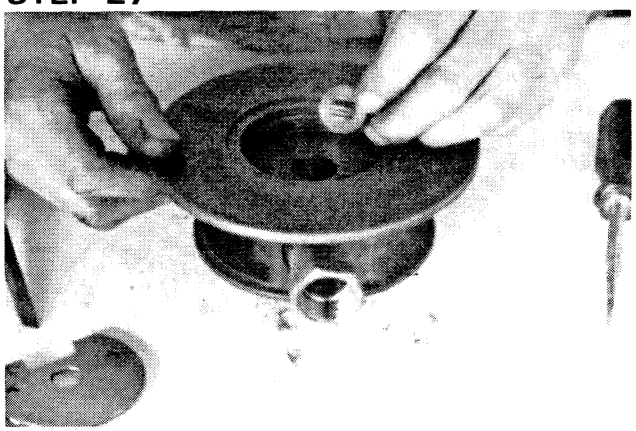

Remove the end bearing washer.

STEP 28



Remove the bearing if it was not removed with turbine shaft.

STEP 29

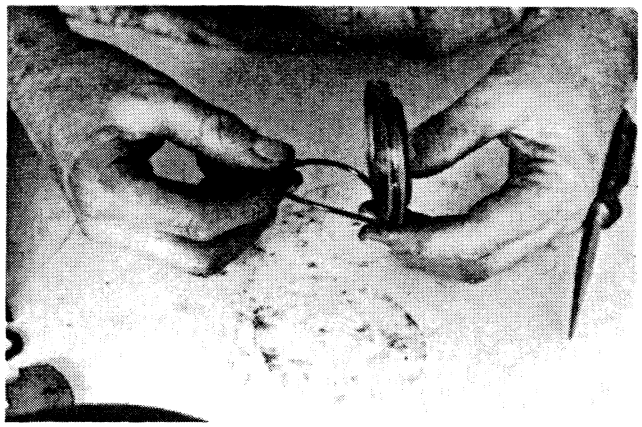

Remove O ring from the insert.

STEP 30

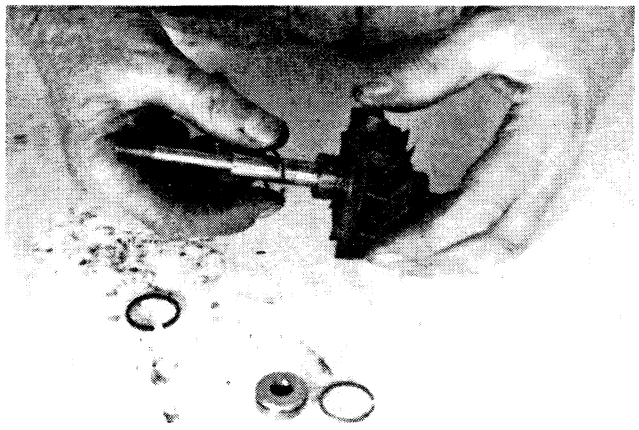

Remove the seal rings from the turbine shaft and the flinger sleeve.

STEP 31

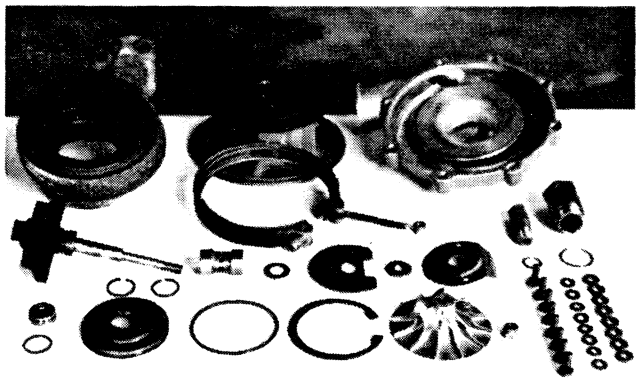

Clean all the parts ready for examination and reassembly.

STEP 32

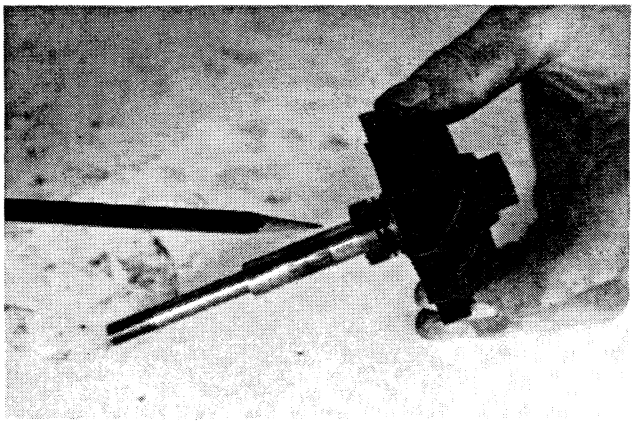

Shaft and turbine wheel. Inspect journal surface for scratches and wear, oil carbon deposits and discoloration from hot shut down.

STEP 33

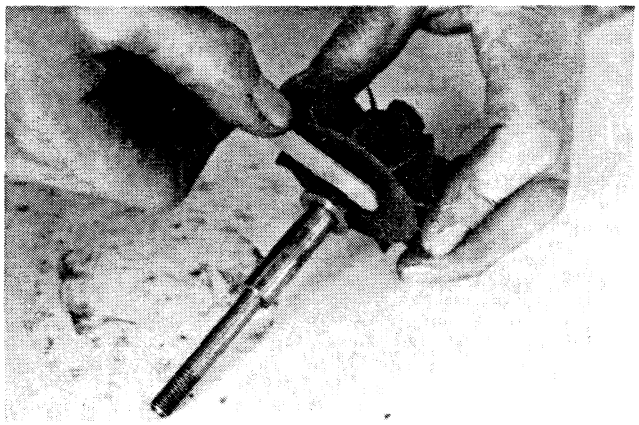

Inspect piston ring groove for side scoring or scratches. Sealing takes place at the side of the ring. Groove width .066" to .068". Maximum width .070".

STEP 34



Diameter of bearing shaft .4800" to .4803". Minimum diameter wear .4799".

STEP 35

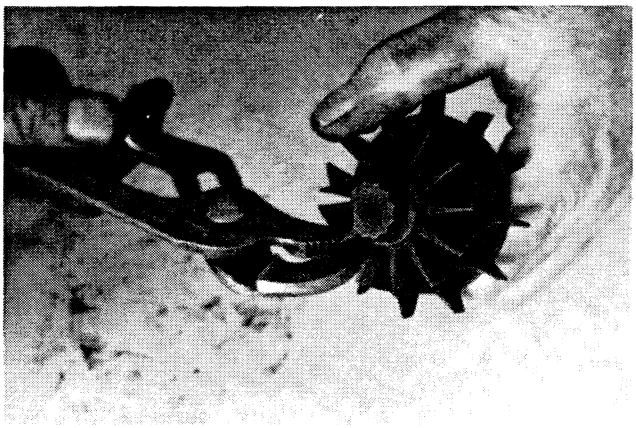

Check for damaged or bent turbine blades. DO NOT ATTEMPT TO STRAIGHTEN BLADES.

STEP 36

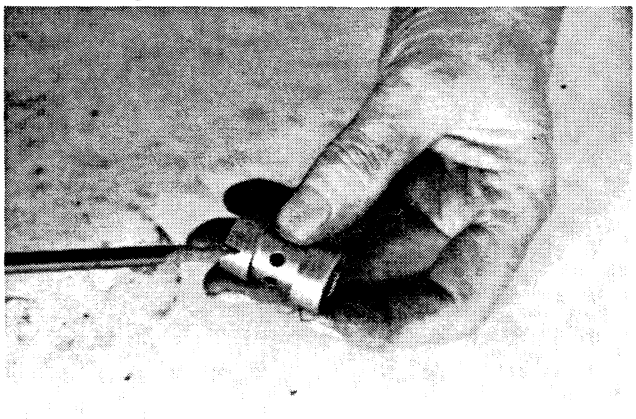

Examine bearing for scratches, grooves and scoring. If not scratched too deeply, check dimensions .8714" to .8719" O.D. and .4815" to . 4818" I. D.

STEP 37

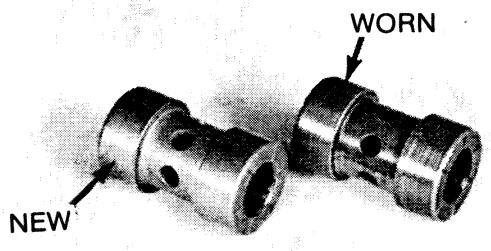

New bearings will be TIN coated which allows easy visual reference of wear patterns.

STEP 38

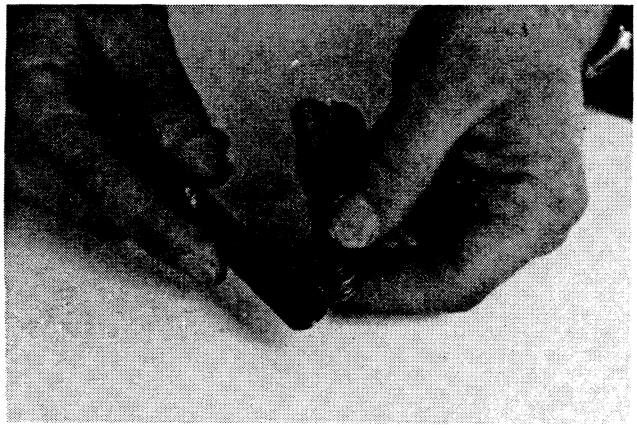

Inspect the flinger sleeve seal ring groove, as in Step 37.

STEP 39

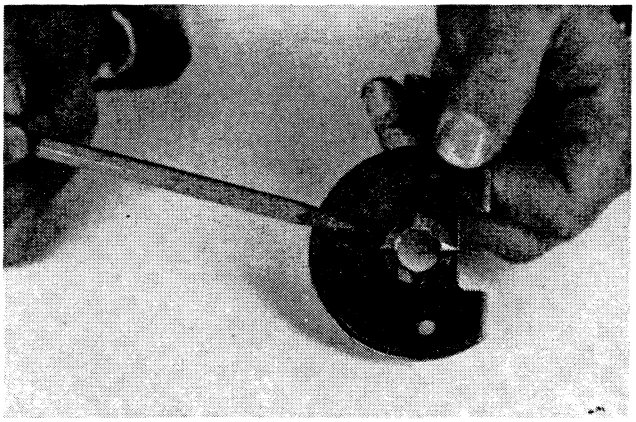

Inspect the thrust plate for scoring in the thrust washer area.

STEP 40

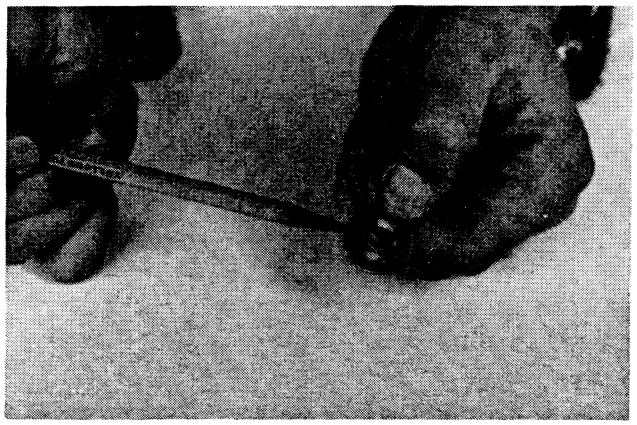

Inspect the thrust washer for wear and scoring. Wear will affect end float. Maximum end float . 004" to .008".

STEP 41

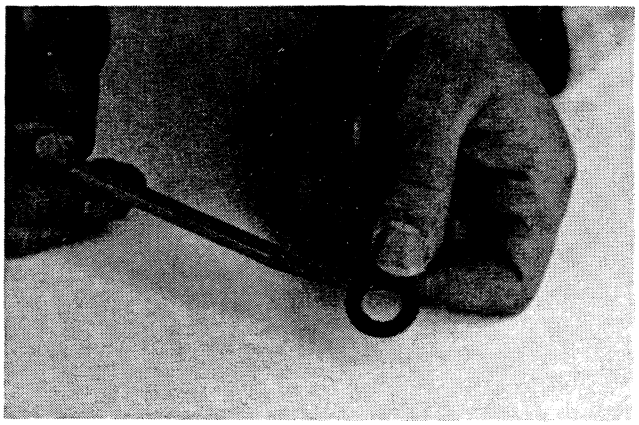

Inspect bearing washer for scoring and wear.

STEP 42

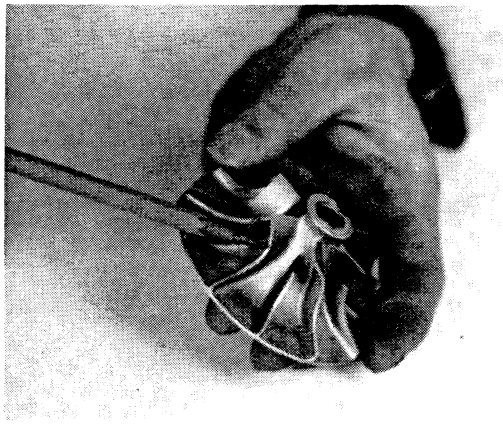

Compressor wheel should be examined for damaged or bent blades, and dirty air erosion of the blades.

STEP 43

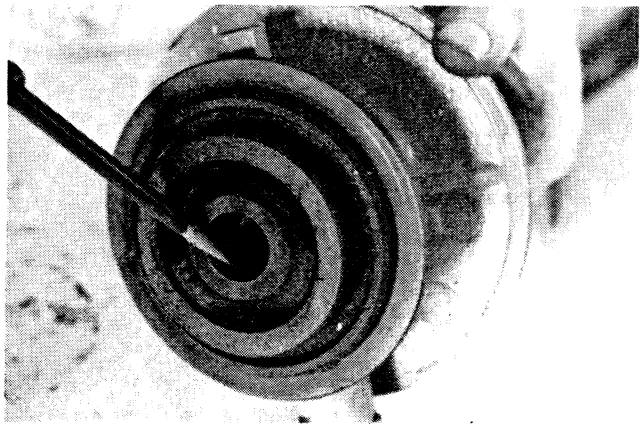

Check bearing housing for scoring and metal transfer from bearing. Also, check for scratches and scoring in seal ring area.

STEP 44

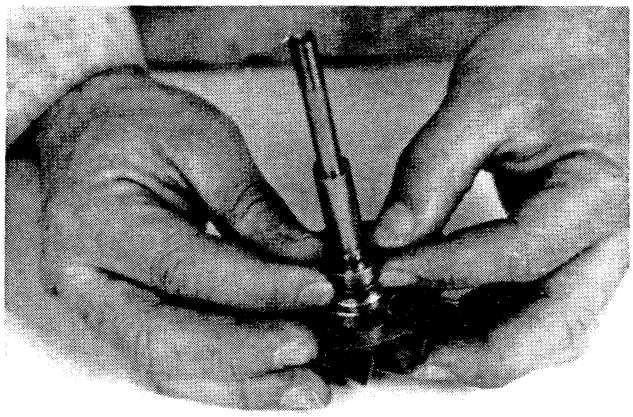

Install piston rings on turbine wheel and shaft assembly, taking care not to over-expand the rings.

STEP 45

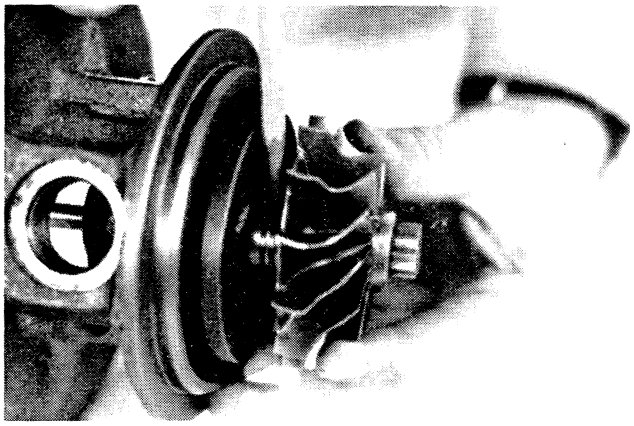

Lubricate the piston rings and install the turbine wheel and shaft assembly into the central bearing housing. Slight rocking of the shaft from side to side will allow the rings to enter the bore without damage.

STEP 46



Lubricate the I.D. and O.D. of the central bearing bushing and install it over the shaft from the compressor.

STEP 47

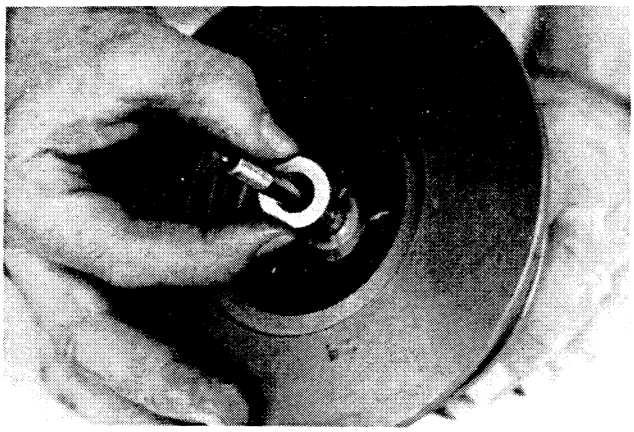

Lubricate and install bearing washer over shaft.
NOTE: ***This is the thin flat steel washer, not the thrust washer.***

STEP 48

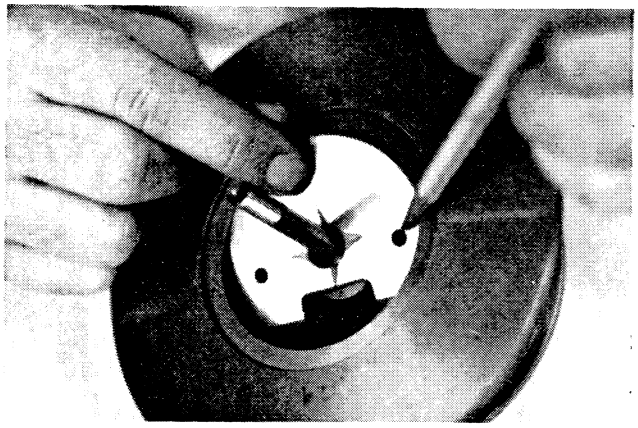

Lubricate both sides of the thrust plate and install over the shaft, over the two locating pins, note, brass face out.

STEP 49

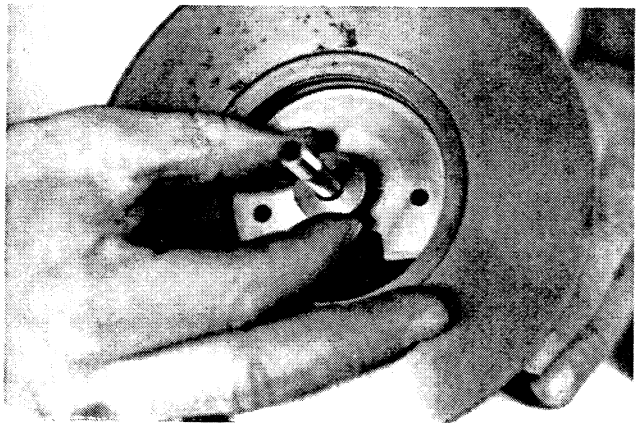

Lubricate and install the thrust washer.

STEP 50

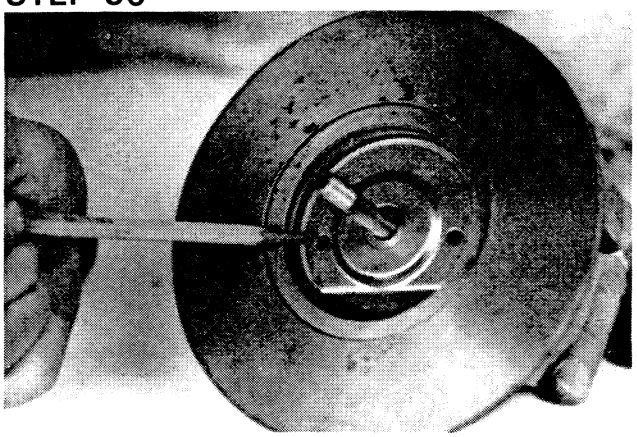

Install the oil deflector over the shaft and locate over the dowel pins.

STEP 51

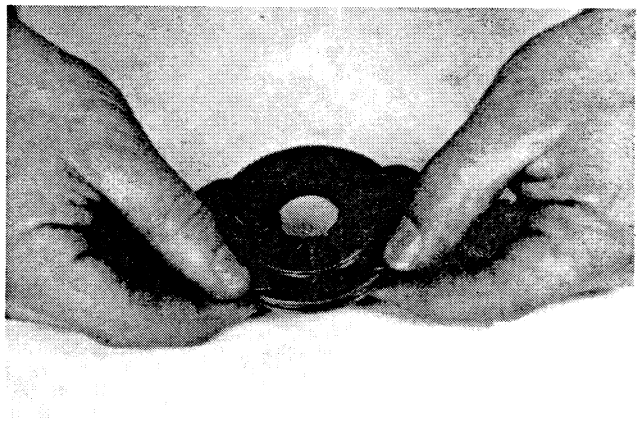

A new O ring should be installed into the outer groove of the insert. Lubricate the O ring.

STEP 52

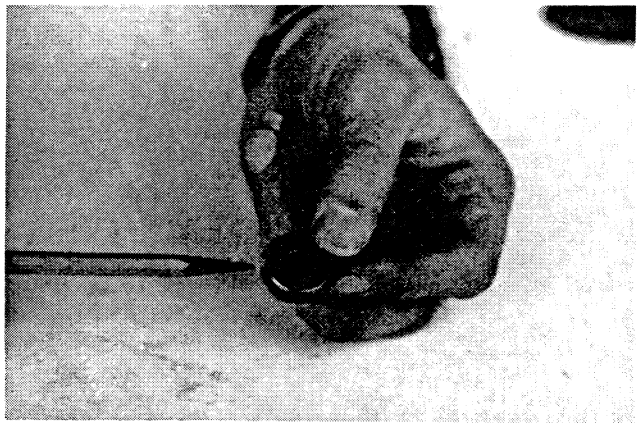

Install the seal ring in the flinger sleeve.

STEP 53

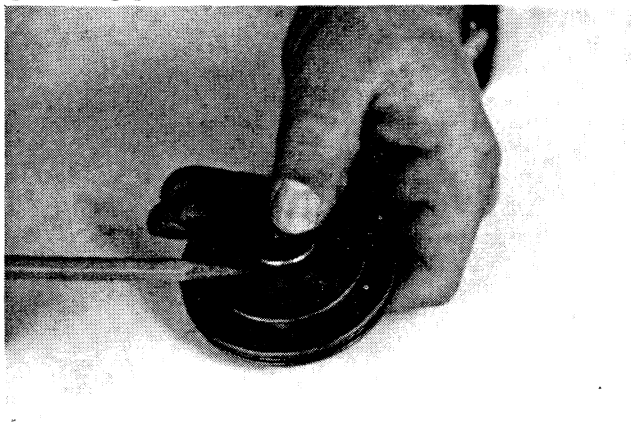

Apply clean lubricant to the ring and install the flinger in the insert.

STEP 54



Slip the insert over the shaft, taking care not to move the flinger out of position and press the insert into the central bearing housing, past the snap ring groove. Take care not to cut O ring.

STEP 55

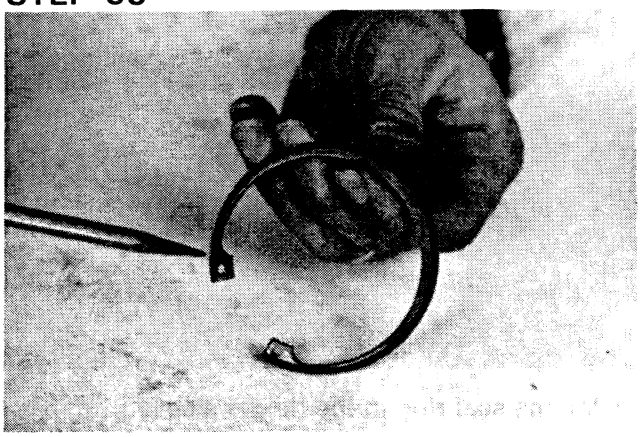

Install the snap ring, beveled face up, in the groove. Make sure snap ring is fully located.

STEP 56

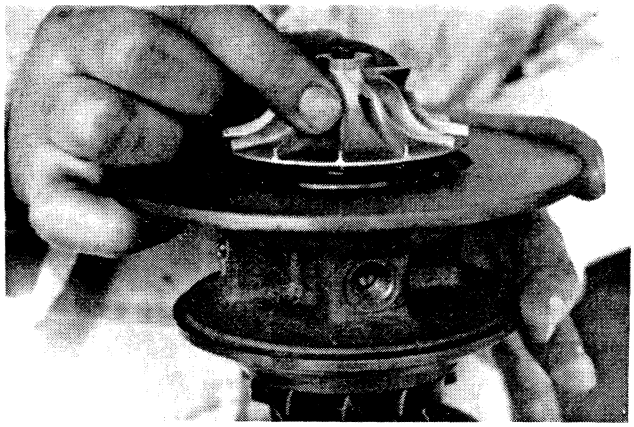

Clamp the 5/8 box end wrench in the vise. Mount the turbine end of the shaft in the wrench. Take CAUTION not to allow the shaft to drop. Slip the compressor wheel over the shaft and make sure it is fully seated up against the flinger hub.

STEP 57

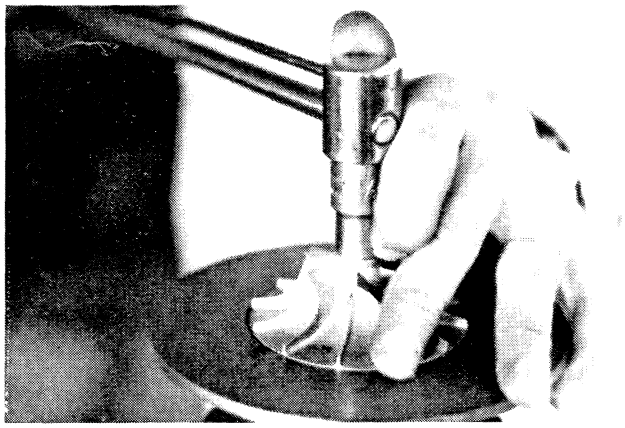

Using a new locknut, coat the threads and back face of the nut with graphite grease. Torque to 13 ft. lbs.USE CAUTION NOT TO BEND OR TWIST SHAFT.

STEP 58



Check the rotating assembly to make sure it rotates freely without rubbing. If any binding or rubbing is noted, it must be dismantled and rechecked. Shaft end float .004" to .008".

SERVICING THE MODEL H1 TURBOCHARGER

CASE CORPORATION

Rac 8-21340

Printed in U.S.A.
August, 1978

THIS SERVICE MANUAL SUPPLEMENT SHOULD BE USED WITH PUBLICATION #9-78235, TURBOCHARGER FAILURE ANALYSIS.

REMOVING THE H1 TURBOCHARGER:

STEP 1 REMOVE THE HOOD AND STEAM CLEAN AROUND THE TURBOCHARGER AND INTAKE HOSES.

STEP 2 REMOVE THE INTAKE HOSE AFTER LOOSENING THE THREE CLAMPS. (NOTE ONE ON BREATHER HOSE.)

STEP 3 LOOSEN BOTH HOSE CLAMPS ON BOTH ENDS OF THE INDUCTION ELBOW CONNECTIONS, SLIDE THE HOSES ONTO THE ELBOW AND REMOVE THE ELBOW COMPLETE WITH HOSES.

STEP 4 REMOVE THE TWO SET SCREWS HOLDING THE OIL SUPPLY PIPE TO THE TURBO.

STEP 5 REMOVE THE TWO SET SCREWS HOLDING THE OIL RETURN PIPE TO THE TURBO.

STEP 6 REMOVE THE THREE BOLTS HOLDING THE MUFFLER FLANGE PIPE TO THE EXHAUST MANIFOLD AND REMOVE THE FLANGE.

STEP 7 REMOVE THE CAST IRON COUPLING SLEEVE BETWEEN THE TURBO AND MUFFLER FLANGE.

STEP 8 REMOVE THE TURBOCHARGER FLANGE NUTS AND REMOVE THE TURBOCHARGER FROM THE TRACTOR.

NOW PROCEED TO DISMANTLE THE TURBOCHARGER, AS SHOWN IN STEPS 9 THRU 24.

HOLSET H1 TURBOCHARGER

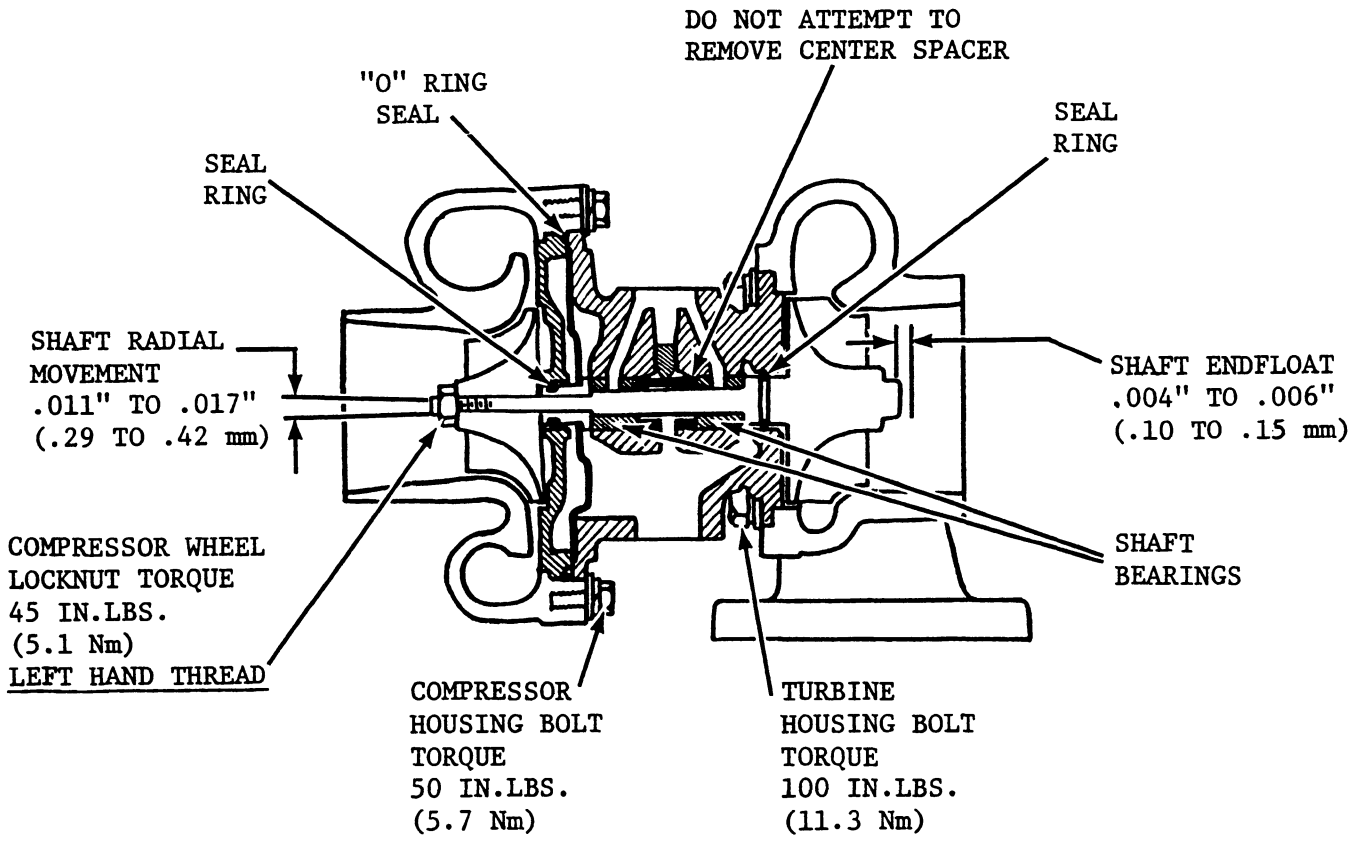

STEP 9

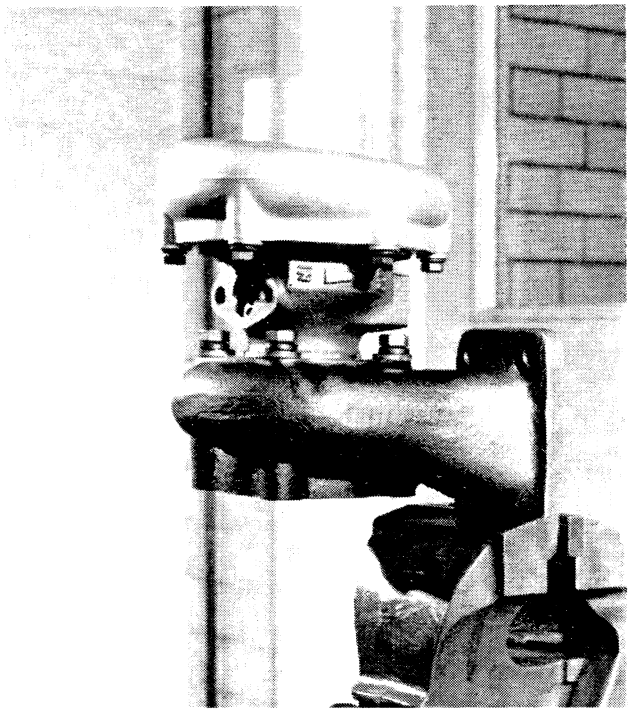

CLAMP THE TURBOCHARGER FIRMLY IN A VISE, AS SHOWN.

STEP 10

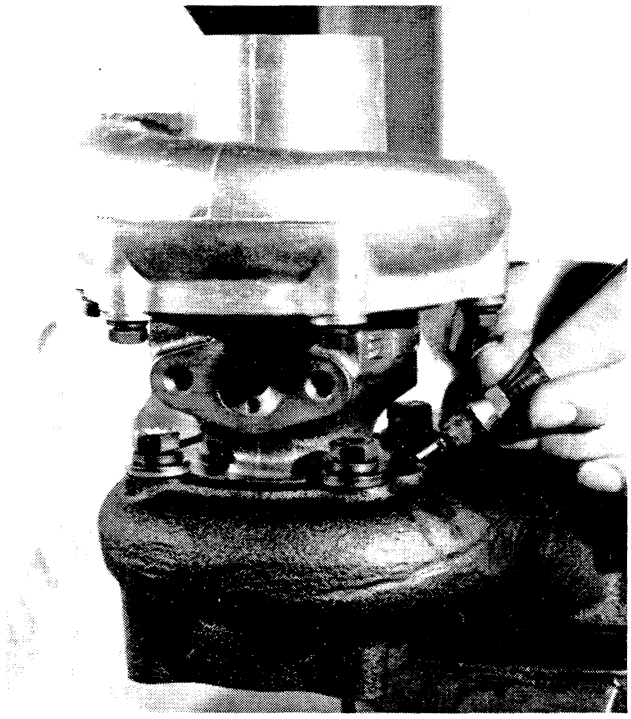

MARK THE POSITION OF EACH HOUSING, SO THEY CAN BE RETURNED TO THEIR ORIGINAL POSITIONS.

STEP 11

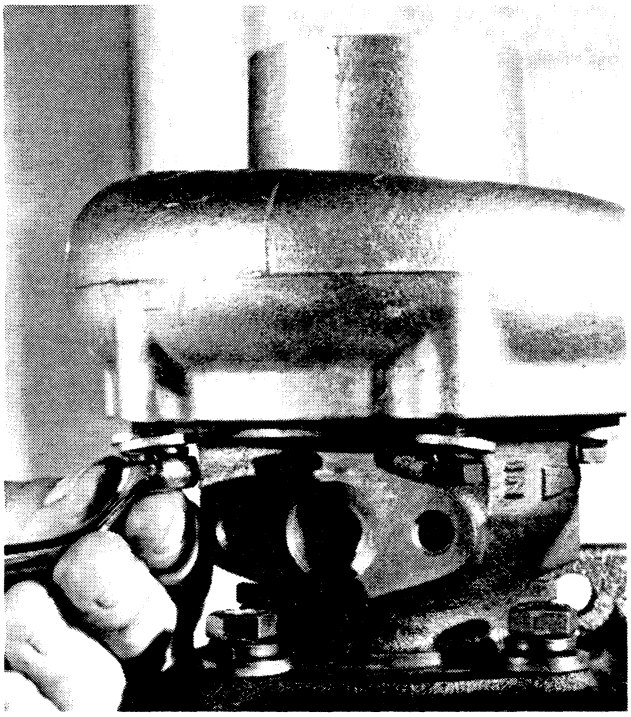

REMOVE THE SIX SPECIAL CAP-SCREWS, LOCKWASHERS AND RETAINING PLATES.

STEP 12

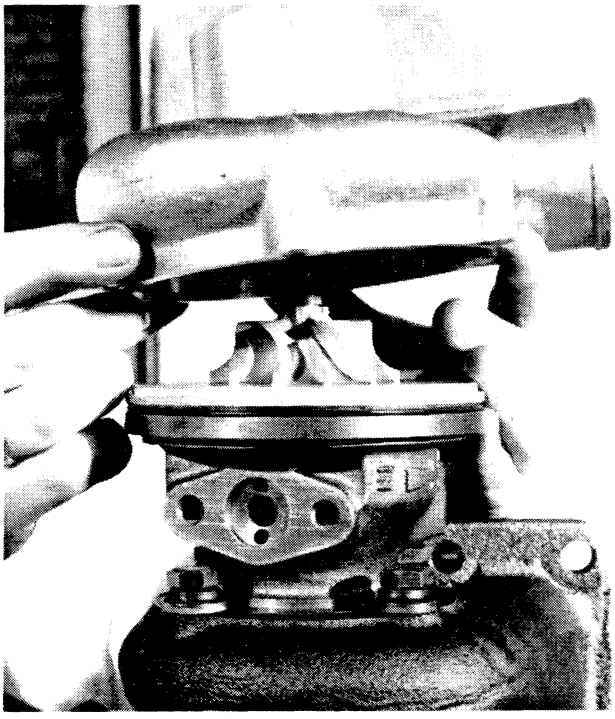

REMOVE THE COMPRESSOR HOUSING CAREFULLY AND NOTE THE "O" RING SEAL.

STEP 13

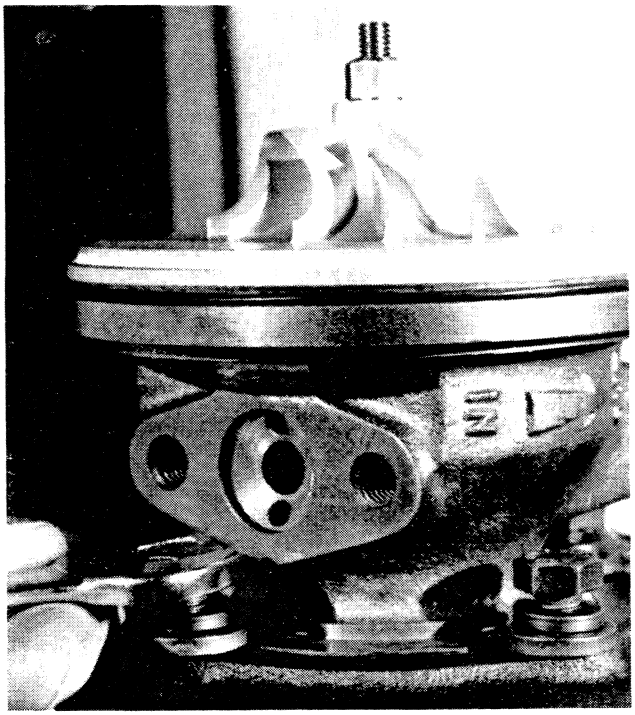

REMOVE THE FOUR SPECIAL TURBINE HOUSING CAPSCREWS, LOCKWASHERS AND RETAINING PLATES.

STEP 14

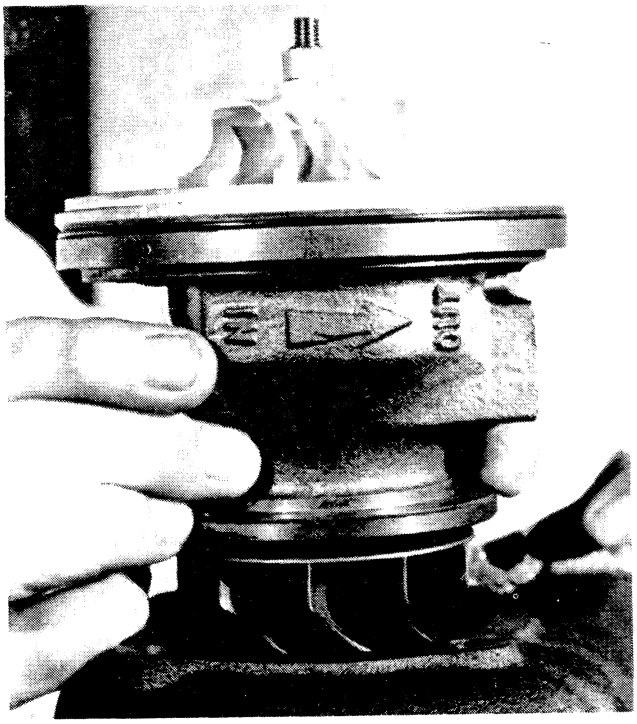

LIFT THE COMPLETE ROTATING ASSEMBLY OUT OF THE TURBINE HOUSING.

STEP 15

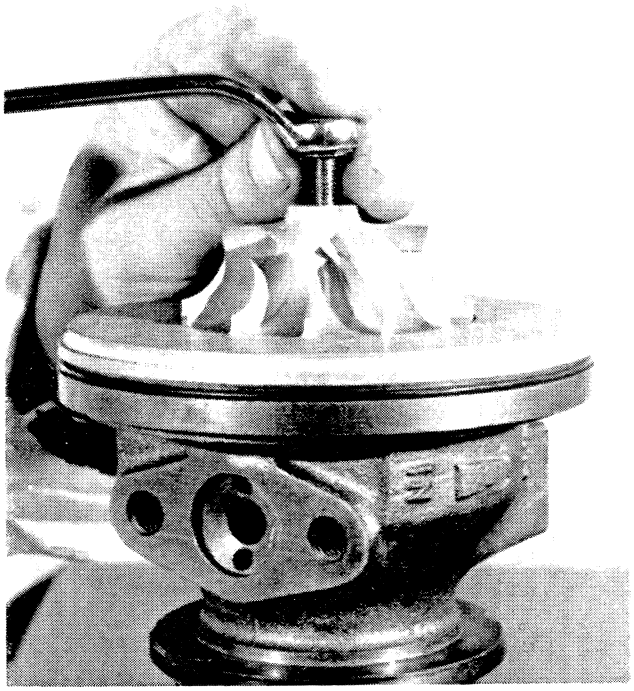

CLAMP THE ROTATING ASSEMBLY VERTICALLY IN THE VISE, TAKING CARE TO CLAMP ON THE TURBINE WHEEL END BOSS. REMOVE THE COMPRESSOR WHEEL LOCKNUT. NOTE LEFT HAND THREAD, AND BALANCE MARKS ON COMPRESSOR FAN AND SHAFT.

STEP 16

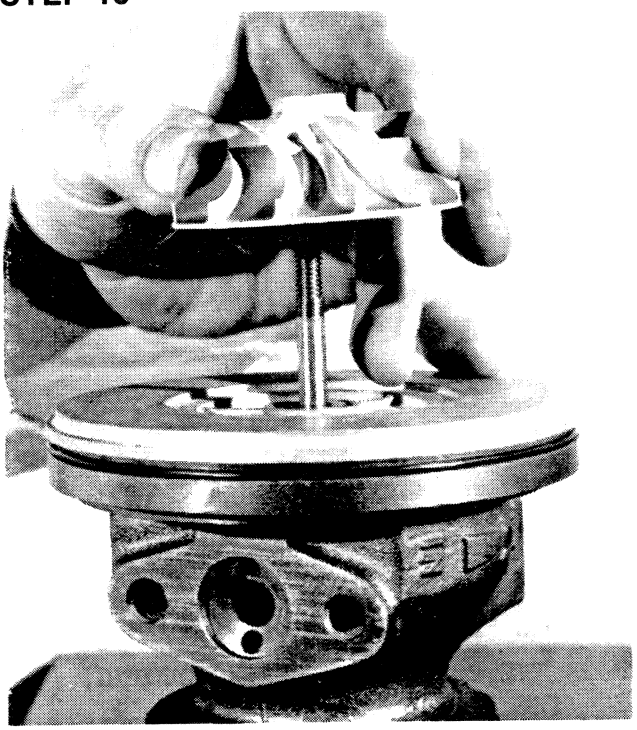

CAREFULLY LIFT OFF THE COMPRESSOR WHEEL.

STEP 17



REMOVE THE COMPRESSOR BACKPLATE COMPLETE WITH THE SPACER SLEEVE AND THE OIL DEFLECTOR PLATE.

STEP 18



REMOVE THE SEALING RING FROM THE SPACER.

STEP 19

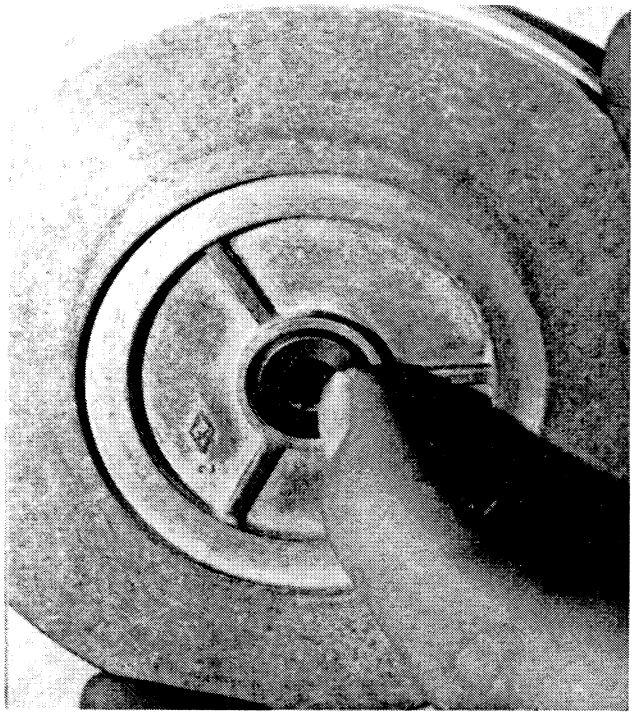

HOLDING THE BACKPLATE UP AT ONE EDGE, GENTLY PRESS THE SPACER THROUGH.

STEP 20

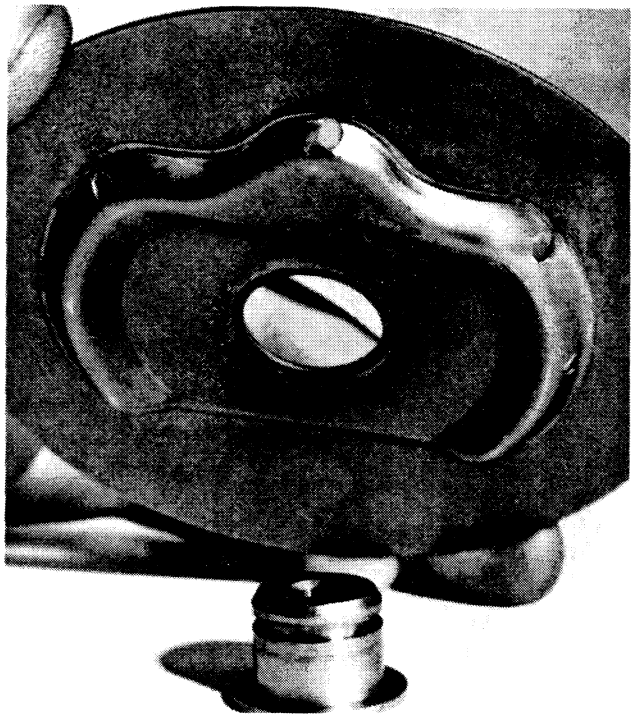

LIFT THE OIL DEFLECTOR OFF THE SPACER.

STEP 21

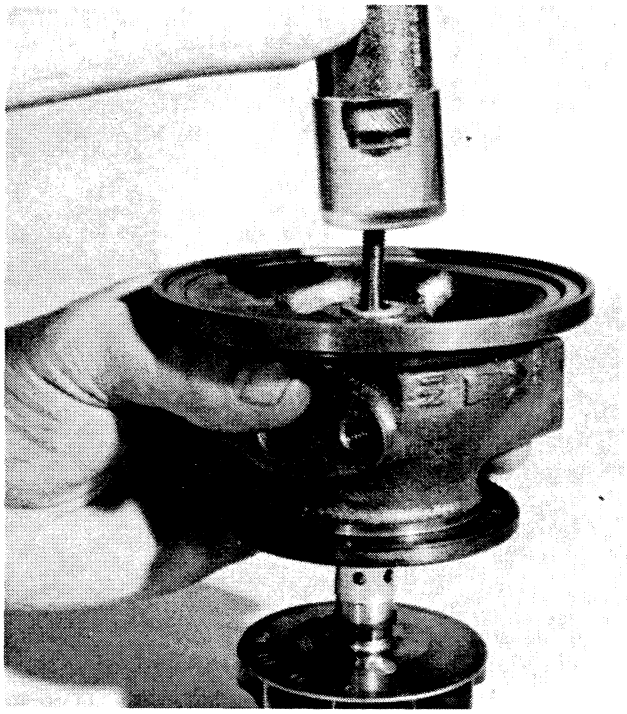

REMOVE THE HOUSING AND TURBINE SHAFT FROM THE VISE, AND REMOVE THE TURBINE SHAFT. A GENTLE TAP WITH A SOFT HAMMER MAY BE NECESSARY.

STEP 22



REMOVE THE COMPRESSOR END BEARING. DO NOT ATTEMPT TO REMOVE THE CENTER BEARING SPACER.

STEP 23

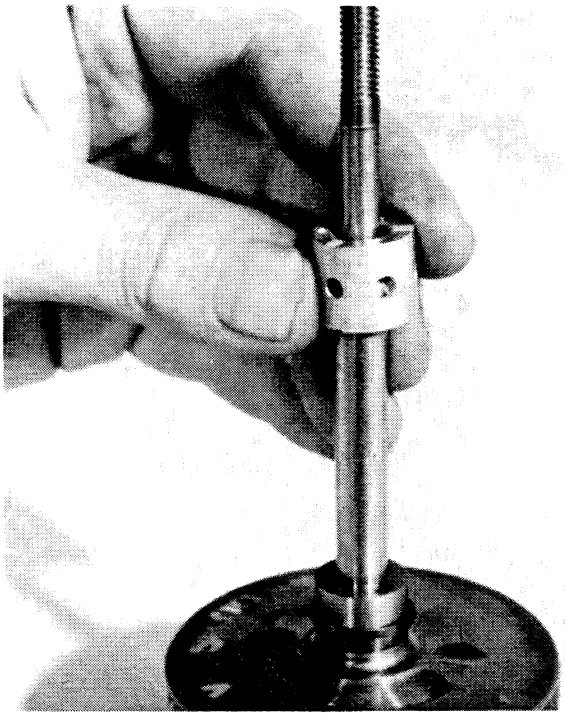

REMOVE THE TURBINE END BEARING FROM THE SHAFT. NOTE: THIS MAY HAVE STAYED IN THE HOUSING WHEN THE SHAFT WAS REMOVED.

STEP 24

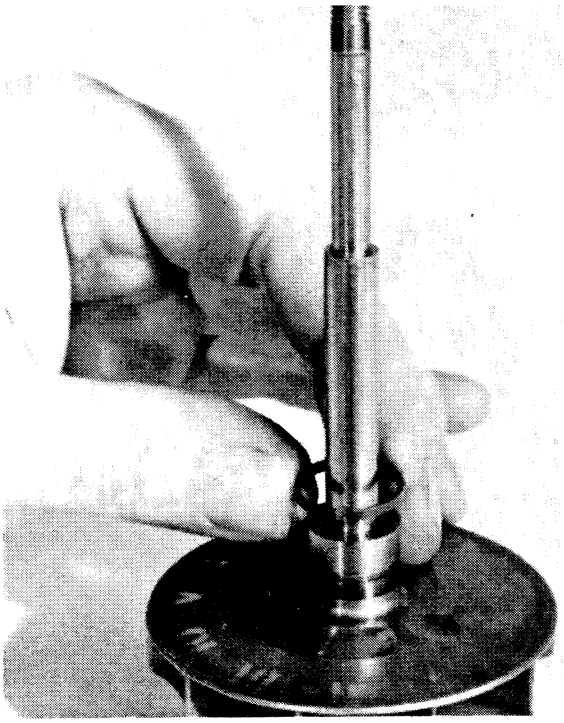

REMOVE THE TURBINE SHAFT SEAL RING.

CLEAN ALL THE COMPONENTS READY FOR EXAMINATION AND REASSEMBLY. (CAUSTIC SOLUTIONS WILL DAMAGE CERTAIN PARTS AND SHOULD NOT BE USED FOR CLEANING.)

INSPECTION: (REFER TO PUBLICATION #9-78235 FOR VISUAL REFERENCE AS AN AID TO TYPES OF FAILURE RECOGNITION.)

STEP 25 SHAFT AND TURBINE WHEEL: INSPECT JOURNAL SURFACES FOR SCRATCHES AND WEAR, OIL CARBON DEPOSITS AND DISCOLORATION FROM HOT SHUTDOWN. CHECK SHAFT DIAMETER ON BEARING JOURNALS. .3289" to .3292" (8.354 to 8.362 mm); MINIMUM WEAR DIA. .3288" (8.351 mm).

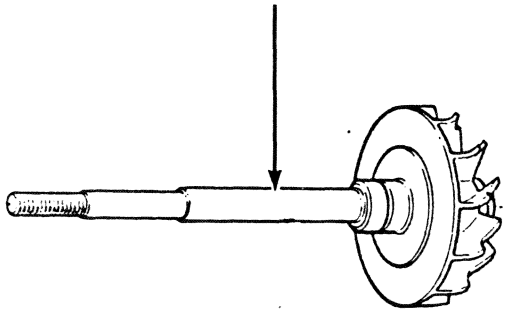

INSPECT THE PISTON SEAL RING GROOVE FOR SIDE SCORING OR SCRATCHES. SEALING TAKES PLACE AT THE SIDE OF THE RING. GROOVE WIDTH SHOULD BE .066" TO .068" (1.680 TO 1.730 mm) MAXIMUM GROOVE WIDTH .078" (1.98 mm).

CHECK FOR DAMAGE TO TURBINE BLADES; DO NOT ATTEMPT TO STRAIGHTEN BLADES.

STEP 26 SHAFT BEARINGS: INSPECT BEARINGS FOR SCRATCHES, GROOVES AND SCORING. IF NOT SCRATCHED TOO DEEPLY, CHECK DIMENSIONS. .3300" TO .3303" (8.382 TO 8.392 mm) O.D. AND .6217" TO .6222" (15.791 TO 15.804 mm) I.D.

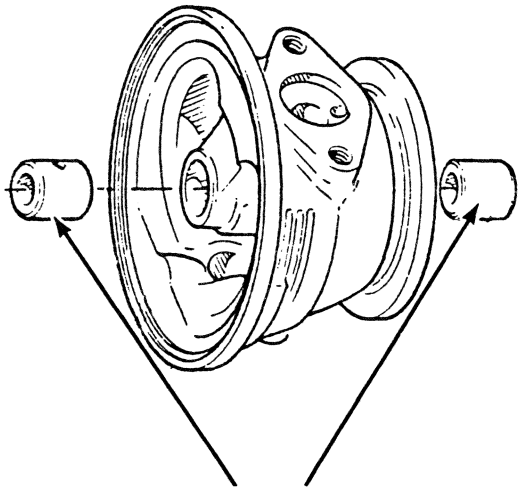

NOTE: NEW BEARINGS WILL BE TIN COATED, WHICH ALLOWS EASY VISUAL REFERENCE OF WEAR PATTERNS.

STEP 27 SHAFT SPACER: CHECK PISTON RING SEAL GROOVE FOR SCRATCHES AND SCORING. REMEMBER, SEALING TAKES PLACE AT THE SIDE OF THE RING. GROOVE WIDTH SHOULD BE: .66" to .68" (1.68 TO 1.73 mm). MAXIMUM GROOVE WIDTH .070" (1.78 mm).

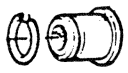

STEP 28 COMPRESSOR BACKPLATE: INSPECT THE SHAFT BORE FOR SEAL RING SCORING AND CARBON DEPOSITS. BORE DIAMETER SHOULD BE: .635" TO .636" (16.129 TO 16.154 mm): MAXIMUM DIAMETER .637" (16.180 mm).

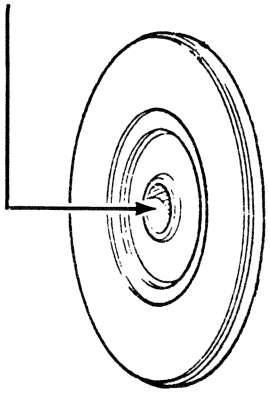

STEP 29 CENTRAL HOUSING: INSPECT THE TURBINE END BORE FOR SEALING RING GROOVES, AND SCRATCHES. BORE DIAMETER FOR THE SEAL RING: .635" TO .636" (16.129 TO 16.154 mm).

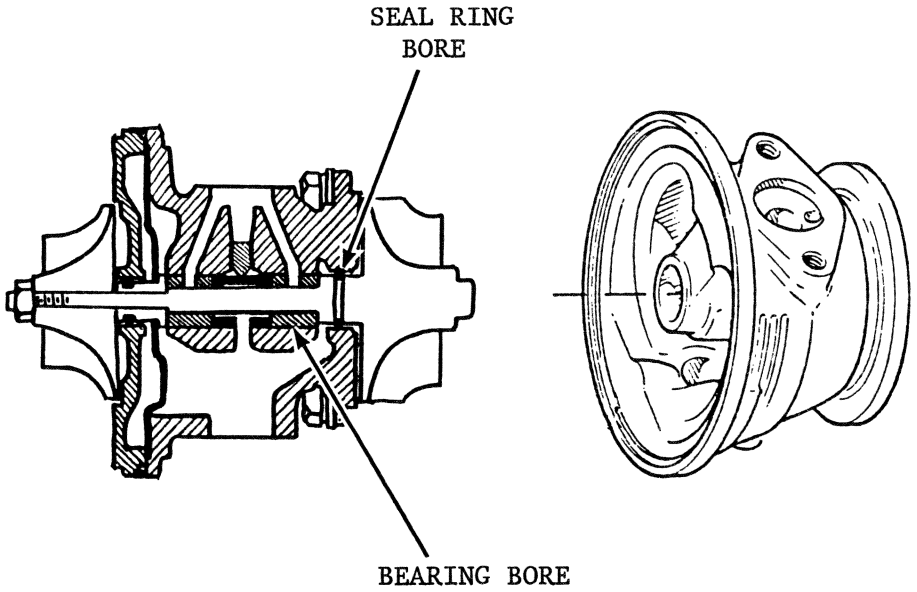

INSPECT THE BEARING BORE FOR SCORING, AND METAL TRANSFER FROM BEARINGS. INSPECT THE ENDS OF THE INTERNAL SPACER FOR SCORING. NOTE: WEAR ON THE SPACER ENDS WILL INCREASE THE END FLOAT. DO NOT ATTEMPT TO REMOVE THE SPACER. SPACER LENGTH .6644" TO .6654"(16.875" TO 16.900 mm). BEARING BORE DIAMETER .6250" TO .6255"(15.875" TO 15.888 mm).

REASSEMBLY PROCEDURE

STEP 30



LUBRICATE THE I.D. AND O.D. OF THE BEARING AND INSTALL IN TURBINE END OF HOUSING.

STEP 31

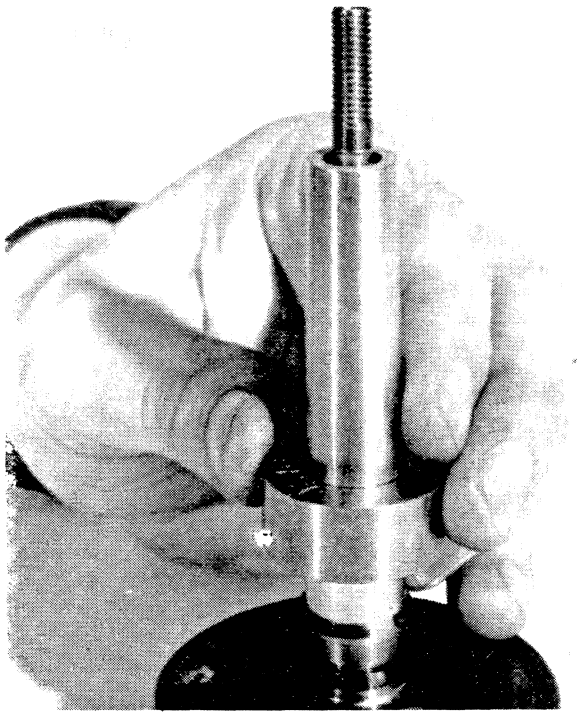

INSTALL THE PISTON SEAL RING ON THE TURBINE SHAFT. NOTE SPECIAL TOOL SHOWN IS A PRODUCTION FIXTURE.

STEP 32



INSTALL THE TURBINE SHAFT INTO THE HOUSING, ROCK THE SHAFT GENTLY TO ENTER THE SEAL RING. NOTE: SPECIAL SEAL RING PLIERS SHOWN ARE A PRODUCTION TOOL.

STEP 33

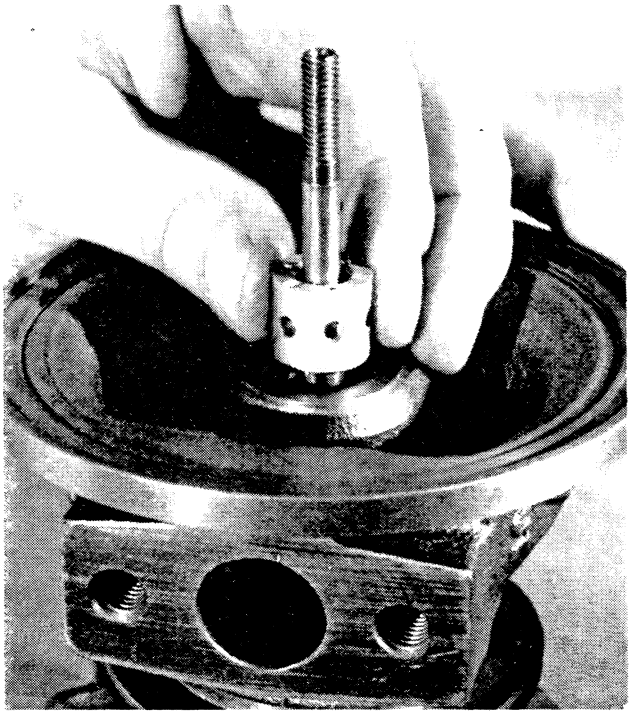

TURN THE HOUSING VERTICAL AND CLAMP TURBINE WHEEL BOSS IN A VISE, TAKING CARE NOT TO DAMAGE THE BLADES. INSTALL THE COMPRESSOR END BEARING.

STEP 34

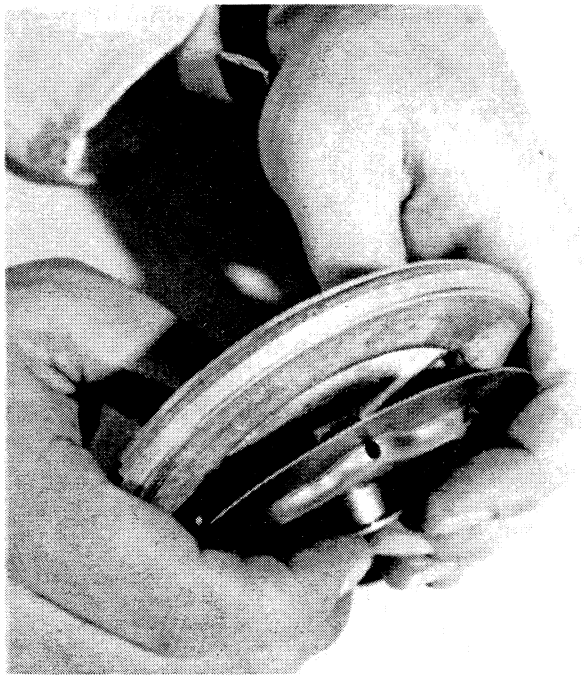

INSTALL THE SPACER THRU THE DEFLECTOR, INSTALL THE PISTON SEAL RING AND PRESS THE SPACER THRU THE BACKPLATE. GENTLY ROCKING THE SPACER WILL HELP TO ENTER THE SEAL RING.

STEP 35

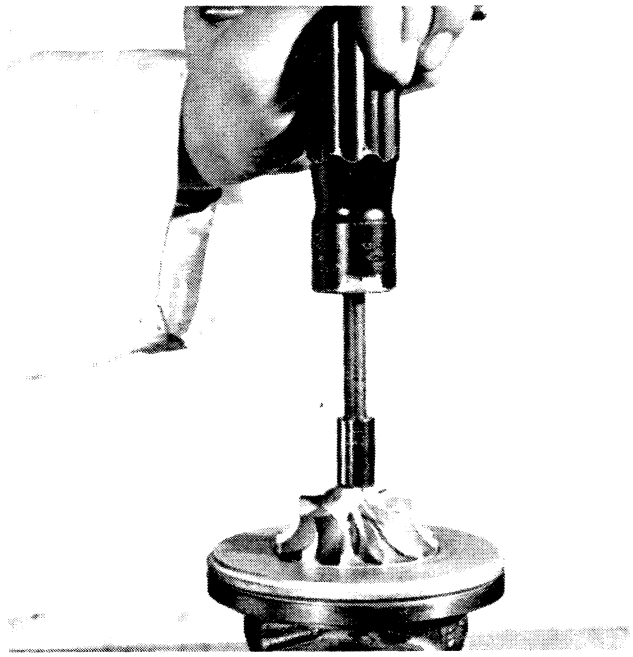

INSTALL THE COMPRESSOR WHEEL AND A NEW LOCKNUT. LINE UP BALANCE MARKS ON COMPRESSOR FAN HUB AND SHAFT END. NOTE: LEFT HAND THREAD. TIGHTEN TO 45 IN.LBS. (5.1 Nm). TAKE CARE NOT TO BEND THE SHAFT.

STEP 36

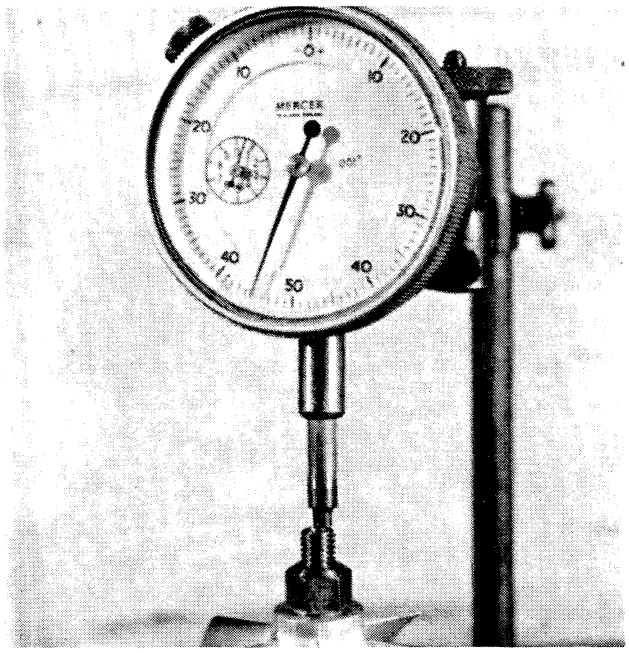

SPIN THE SHAFT AND CHECK END FLOAT .004" - .006" (.10 to .15 mm). EXCESSIVE END FLOAT CAN BE CAUSED BY A WORN SPACER IN THE HOUSING OR A WORN COMPRESSOR END BACKPLATE SPACER.

STEP 37

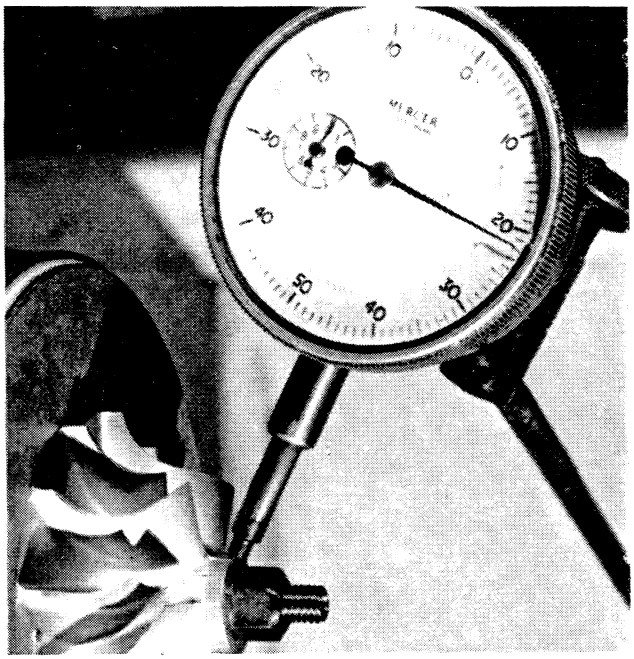

CHECK RADIAL MOVEMENT BY CAREFULLY PUSHING THE COMPRESSOR WHEEL TOWARDS AND AWAY FROM THE DIAL INDICATOR. TOTAL MOVEMENT SHOULD NOT EXCEED .017" (.42 mm).

STEP 38

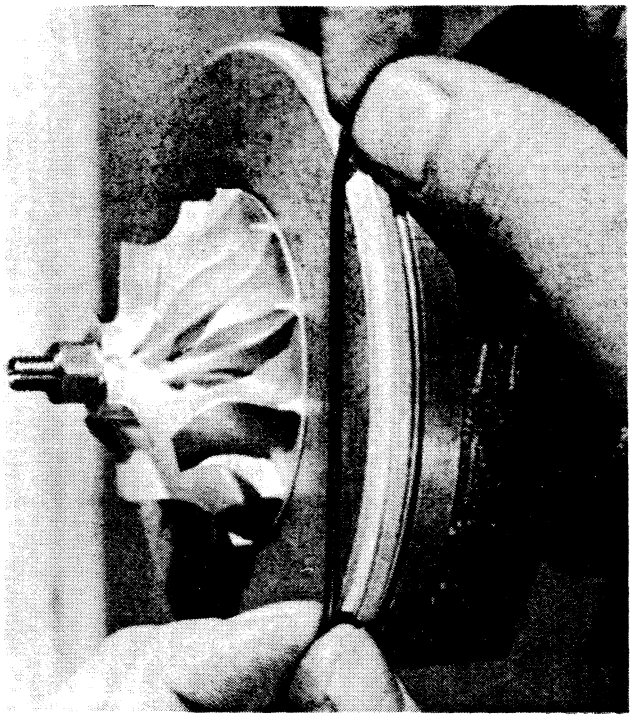

INSTALL A NEW "O" RING ON THE COMPRESSOR BACKPLATE, TAKING CARE NOT TO TWIST THE RING.

STEP 39

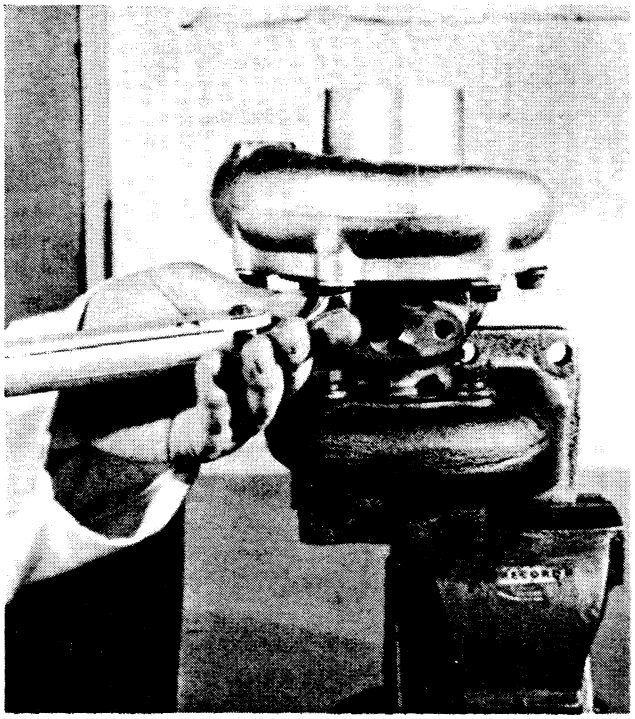

INSTALL THE CENTER ASSEMBLY INTO THE TURBINE HOUSING AND INSTALL THE FOUR SETSCREWS, NEW LOCKWASHERS AND SPECIAL WASHERS. TORQUE TO 100 IN.LBS. (11.3 Nm). INSTALL THE COMPRESSOR HOUSING AND INSTALL THE SETSCREWS, NEW LOCKWASHERS AND SPECIAL WASHER TORQUE TO 50 IN.LBS. (5.7 Nm). CHECK THE SHAFT SPINS FREELY.

INSTALLATION PROCEDURE:

INSTALL THE TURBOCHARGER IN REVERSE ORDER TO REMOVAL. (SEE PAGE 2)

BEFORE STARTING THE TRACTOR, CRANK THE ENGINE OVER ON THE STARTER MOTOR, WITH THE FUEL STOP OUT (FUEL SHUT-OFF), AND MAKE SURE OIL IS FLOWING OUT OF THE OIL RETURN LINE BEFORE RUNNING THE TRACTOR.

NOTE: The CASE CORPORATION reserves the right to make improvements in design or changes in specifications at any time without incurring any obligation to install them on units previously sold.

Section

2565

TURBOCHARGER FAILURE ANALYSIS

2565

CASE CORPORATION
700 State Street
Racine, WI 53404 U.S.A.

CASE CANADA CORPORATION
3350 South Service Road
Burlington, ON L7N 3M6 CANADA

Rac 9-78235

© 1996 Case Corporation
Printed in U.S.A.
February, 1996

CAUSES OF PREMATURE TURBOCHARGER FAILURE

Certain operating and maintenance conditions can arise which could cause premature turbocharger failure. **NOTE:** The total solution to the problem is not in repairing the failure, but in determining the cause. Replacing a damaged turbocharger without determining the cause will frequently result in a repeat failure.

Lack of Lubricating Oil

This type of failure can occur when the amount of oil being supplied to the turbocharger is insufficient to lubricate or cool bearing and journal surfaces.

Operating temperatures affect the volume of oil required by the turbocharger. As turbocharger speed or engine load increases, the need for lubricating oil increases. **NOTE:** Insufficient oil for periods as short as five seconds can cause failure. This is why it is necessary to prime the turbocharger as part of the everyday operating procedure. **IMPORTANT:** It is very important that adequate lubrication reaches the turbocharger bearings and throughout the engine before operating the engine at rated speed.

Priming The Turbocharger

1. Place the transmission range shift lever in "N" Neutral position.

2. Set the throttle lever not more than 1/3 open position (1000 RPM).

3. Push in the fuel shutoff control. Press starter button until engine starts. **IMPORTANT:** Do not increase throttle or apply load until normal oil pressure shows on the engine oil pressure gauge, assuring proper lubrication to the turbocharger.

   IMPORTANT: In very cold weather, at oil filter change or when the tractor has been idle for several weeks or more, proceed as follows to prime the turbocharger.

Pull out the fuel shutoff control, press the start button and hold. Allow the engine to crank until the engine oil pressure gauge pointer reaches the green zone. **Do not exceed 30 seconds cranking time.**

Push in the fuel shutoff control and press the start button. Run the engine (about 2 min. max.) at 1000 RPM until normal engine oil pressure shows on the engine oil pressure gauge assuring proper lubrication to the turbocharger.

4. If the engine fires and stops, wait for the starting motor to stop spinning before attempting another start.
5. Do not use the starting motor longer than 30 seconds without interruption. Wait at least 3 minutes between crankings so batteries can recuperate and the starting motor can cool.
6. Should the engine kill when operating under load, immediately restart the engine to prevent over-heating caused by stopping the flow of oil for turbocharger, cooling and lubrication.

Foreign Material or Dirt in the Lubricating System.

Operating the engine with contaminated oil will cause damage to the turbocharger bearings if the particles are of sufficient quantity. If the particles are large enough, they can clog the internal oil passages and starve the bearings. This is another reason why it is important to change the engine crankcase oil and oil filters at regular specified intervals.

Foreign Material in Exhaust or Air Intake Systems.

The rotating parts of the turbocharger can be damaged by particles introduced through the air intake, which makes proper maintenance of the air cleaner system very important.

High Exhaust Temperature

Excessive temperature in the exhaust system will cause lubricating oil to coke in the center housing drain annulus at the turbine end. Oil leakage, carbon deposits and eventual damage to the back of the turbine wheel will result. High exhaust temperature can also erode the turbine housing creating pitting and deposits on the turbine wheel.

High exhaust temperature can be caused by the turbocharger itself. Carbon build up on the turbine wheel, if severe, will slow the rotating assembly, reducing the amount of inlet air.

TURBOCHARGER FAILURE ANALYSIS

NOTE: Following are discussion and examples of damaged parts which are typical turbocharger failures. In analyzing turbocharger failure it is important to recognize what caused the failure. Replacing of the parts will, of course, repair the damage but, unless you can correct the causes, a reoccurance of these problems can be expected.

Turbine Contact Damage

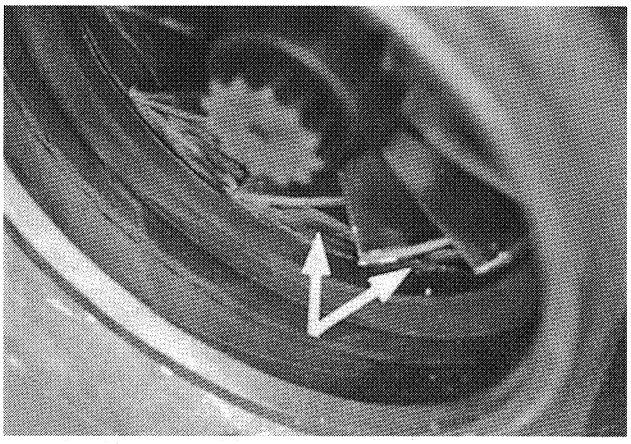

Contact damage to the turbine usually means there was bearing damage and/or shaft motion caused by lack of lubricant or contaminated oil. In this picture we see the turbine end showing wheel rub from bearing failure as a result of oil starvation.

Compressor Contact Damage

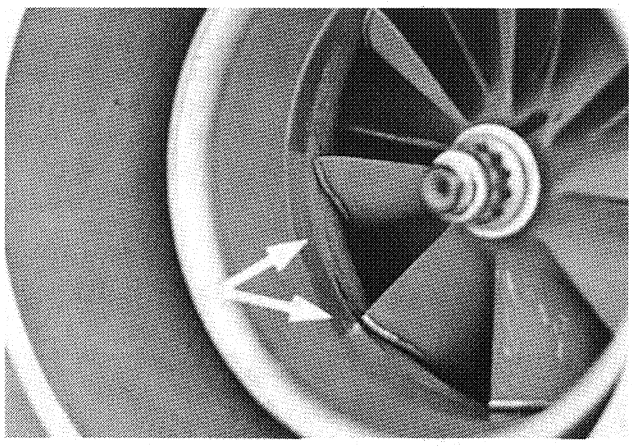

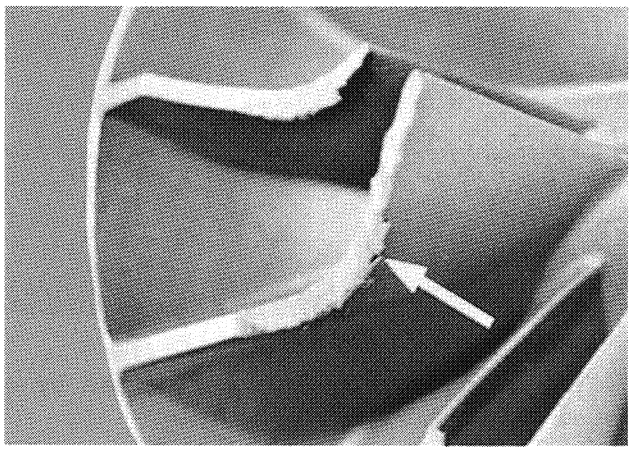

Damage to bearings from contaminated lubricant or from lack of lubricant will allow motion of the shaft, permitting the compressor wheel to contact the housing. Marking will be visible on both the housing and the compressor wheel. In these pictures we see the compressor end showing wheel rub from bearing failure as a result of oil starvation.

Coked Center Housing

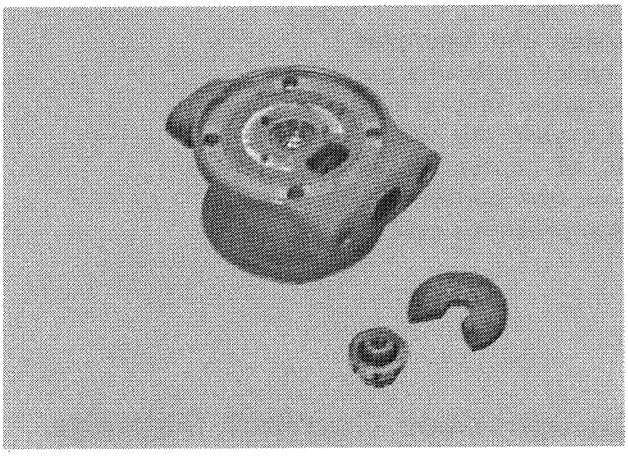

Coked (sludged) center housing failures are generally caused by high exhaust temperatures due to over-fueling, over-loading the engine, dirty engine oil, or plugged oil return. Also examine bearings for sludge.

Scored Turbine Shaft

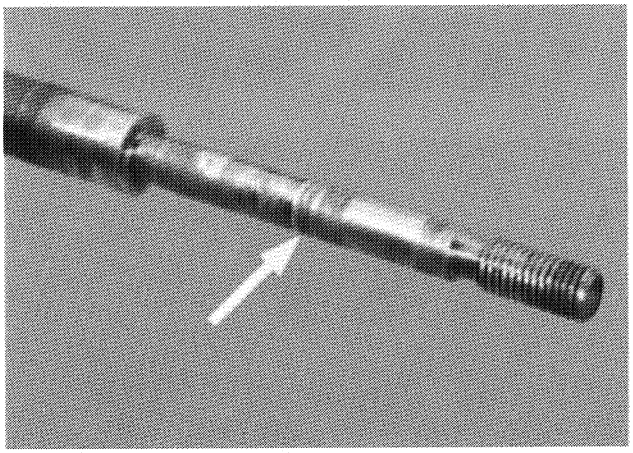

The scoring of this shaft was caused by a loose compressor wheel lock nut.

Scored Bearing Surface

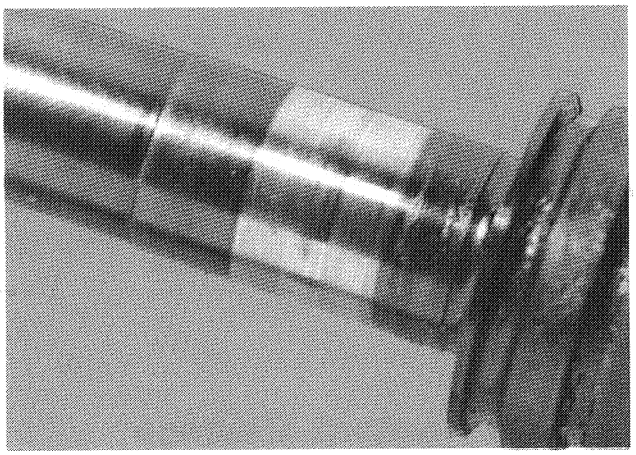

The bearing surfaces of this shaft were scored due to dirty engine oil. Evidence of a contaminated oil failure calls for careful, thorough examination of engine lube system.

Scored Bearings

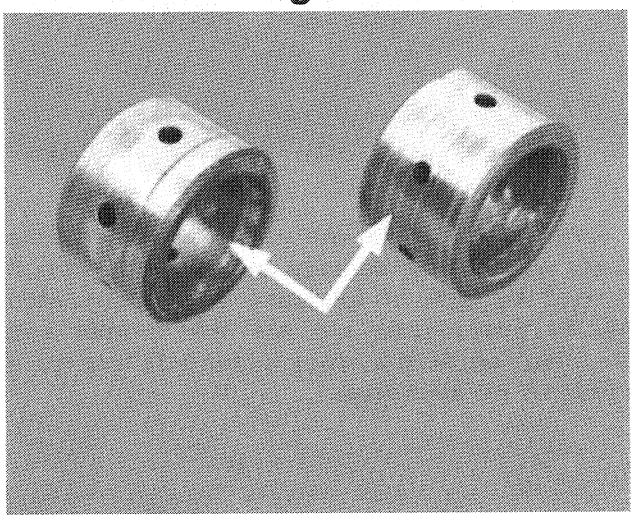

Scoring on the inside and outside surfaces of the bearings is definitely attributed to dirty engine oil.

Scored Thrust Collar

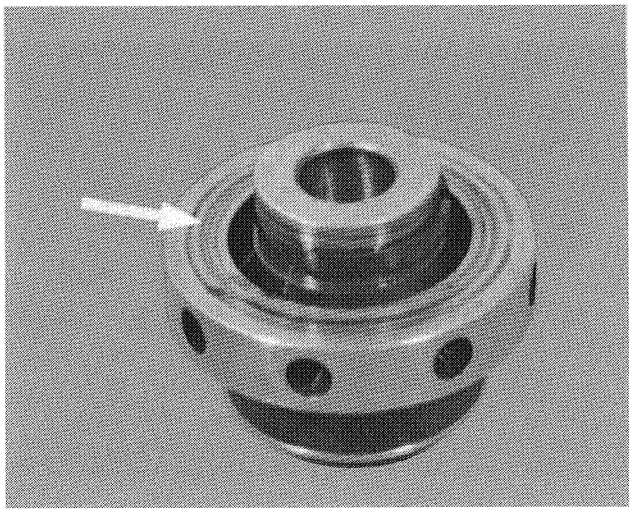

Scoring on the thrust collar caused by dirty oil usually because engine oil and/or oil filters were not changed at the recommended intervals.

Compressor Damage - Soft

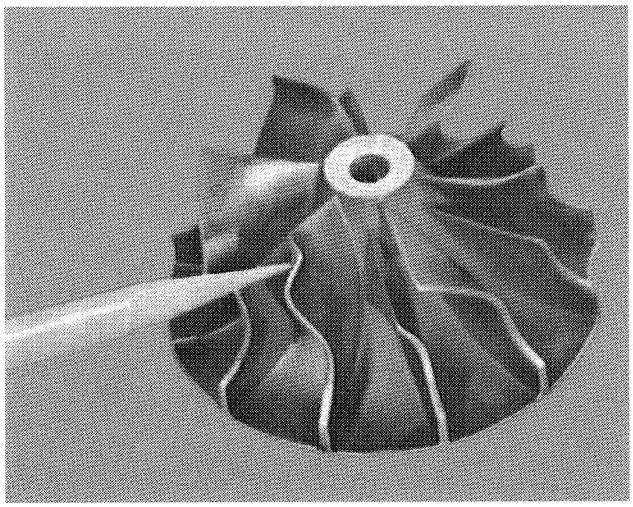

Soft material getting into the inlet will damage the compressor blades as shown. The damage to this blade was caused by a shop towel being left in the intake system.

Compressor Damage - Hard

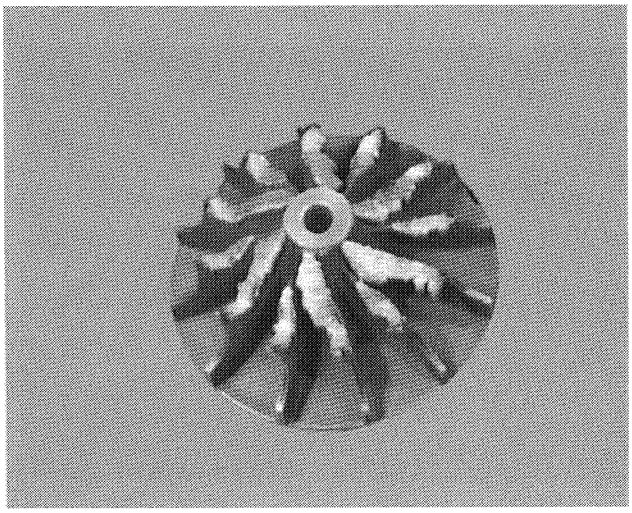

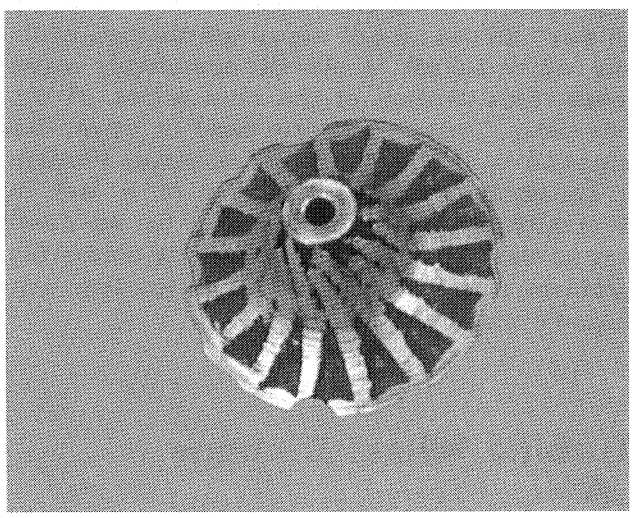

Hard material such as a nut, wire, wrench or bolt getting into the inlet will damage the compressor blades as shown. The compressor housing will be marked by the bits of foreign material. If damage to blades is so extensive that wheel balance is destroyed, some wheel-to-housing contact damage may also be present.

Compressor Blade Erosion

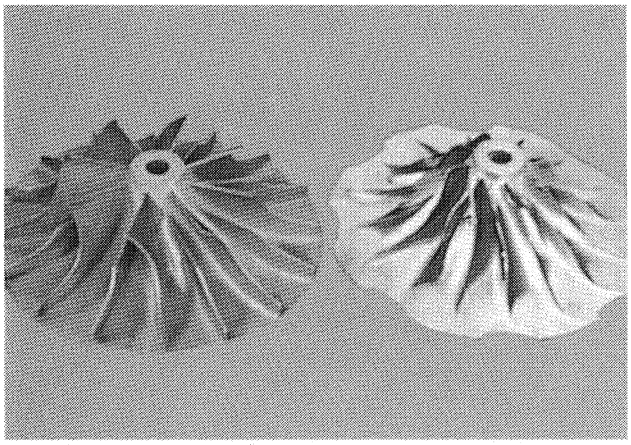

Erosion of compressor blades from ingestion of dust. Blades on one wheel are thinned while the other wheel is almost completely worn away. Fine erosion of the inlet edges of the compressor wheel suggests sand or other fine abrasive in the inlet system, entering through a damaged air cleaner element or a leak in inlet piping. There will generally be no damage to the turbine wheel or bearings unless the problem was so severe that the rotating unit became unbalanced.

Turbine Wheel Damage

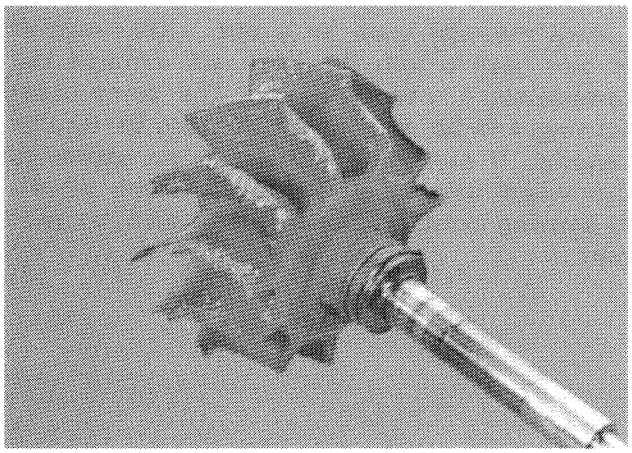

Foreign material in the exhaust system will cause chipped or broken turbine wheel blades. Foreign material is usually something left by accident in the exhaust manifold, or debris from an engine component such as a valve which failed. If damage is extreme, the turbine wheel balance will be destroyed and further damage will occur. If you find this problem checkout the engine.

Turbine Shaft Discoloration

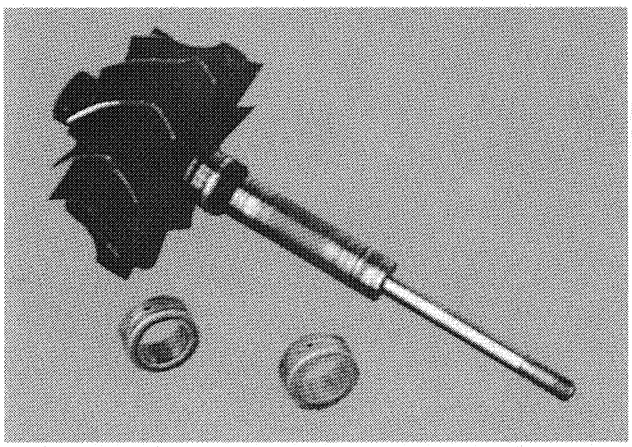

Discoloration of the turbine shaft is due to overheating caused by oil starvation. Lack of lubrication generally is a matter of improper start-up or shut-down practices.

Backing Plate Wheel Rub

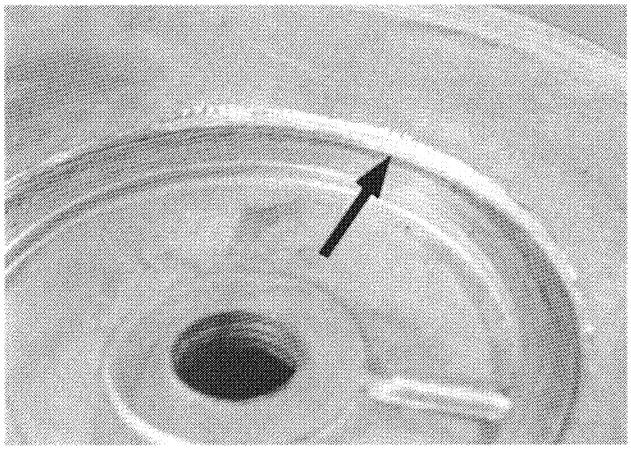

Wheel rub against the backing plate can be caused by a bent shaft or improper assembly.

Blade Edges Lifted

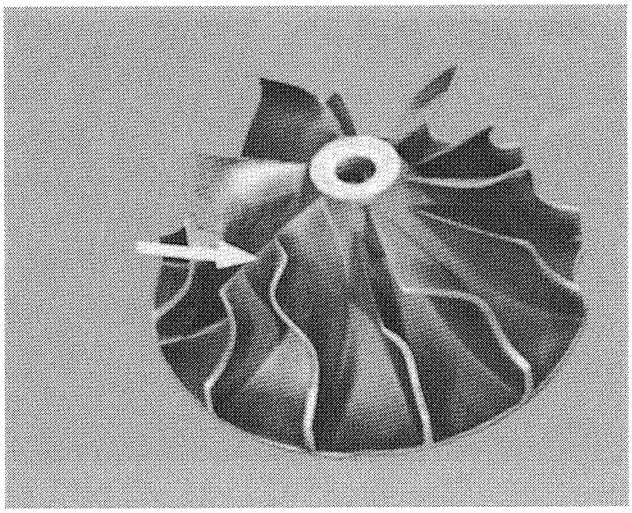

Blade edges of the compressor wheel lifted by improper removal of the compressor housing. Housing should not be pried off but lifted straight off.

Bearing Damage

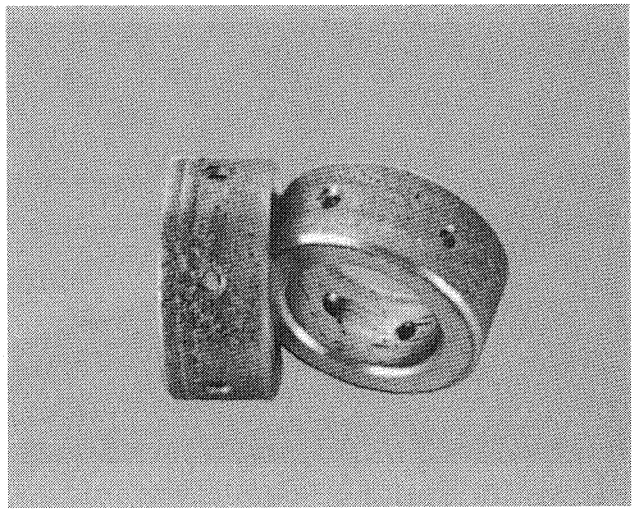

Engine bearing material imbedded in the bearing surfaces. Checkout the engine for possible bearing failure.

Turbine Shaft & Bearings

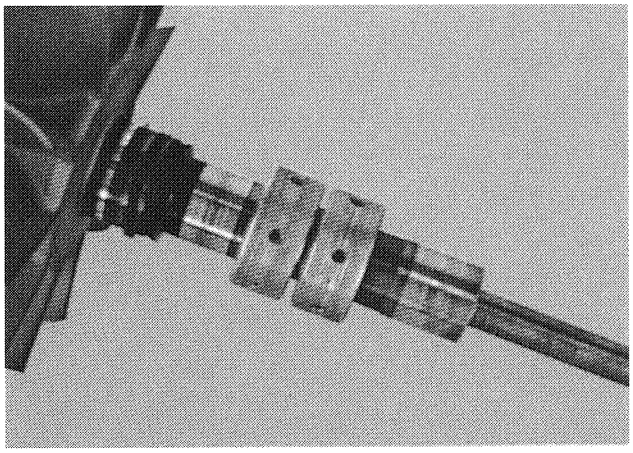

Turbine shaft and bearings showing effect of oil starvation.

Bearing Failure

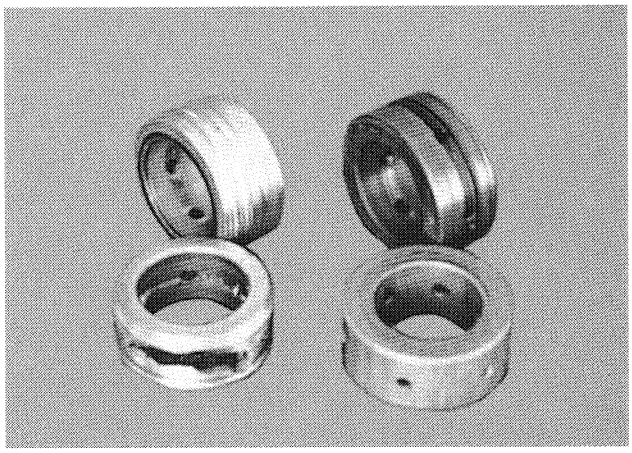

Bearing failures occur in two separate areas. Scoring on the inside as well as the outside is attributed to dirty oil. Abrasive wear can also cause erosion around the oil holes in the bearings. A good bearing is shown in the lower right for comparison.

Fine Scratches on Shaft

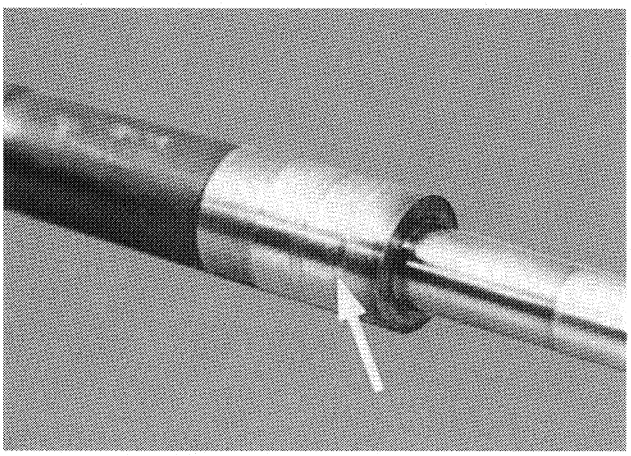

Fine scratches on both bearing journals are evidence that abrasive material has contaminated the lubricating oil.

Bent or Broken Shaft

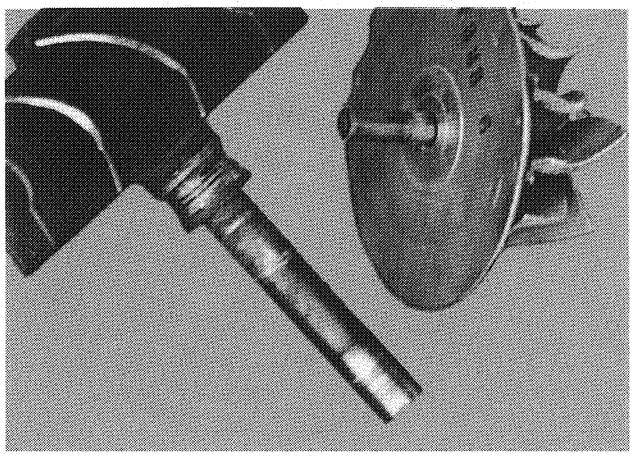

Bearing damage and extreme shaft motion caused by lack of lubrication or abrasives in the oil may eventually cause the shaft to bend or even break. When this type of damage is evident, check the bearings.

NOTE: The Case Company reserves the right to make improvements in design or changes in specifications at any time without incurring any obligation to install them on units previously sold.

Clutches

CLUTCH

SELECTAMATIC TRACTORS

Includes update 9-38183 dated October, 1977

CASE CORPORATION

Pub 9-37131

PRINTED IN U.S.A.

CONTENTS

Section	Page
Dual Clutch — 1210 (11, 154, 230 →), 1410 & 1412 tractors	
How it Works	B1
Removal and Installation	B3
Removal and Replacement	
Clutch Release Bearing Sleeve	B7
Clutch Release Bearings	B7
Clutch Cross Shafts	B8
Clutch Pedal	B8
Hand Clutch Lever	B9
Hydraulic Clutch System: Q-Cab	B10
Unit Maintenance and Repair	
Clutch Operating Adjustments	B13
Dual Clutch Parts	B15
Special Tools	B16
Dual Clutch Dismantling	B19
Dual Clutch Re-assembly	B21
Dual Clutch Adjustments	B23
Specifications and Data	B25
Single Plate Clutch — Non-Livedrive Tractors	
Operation	1
Adjustments	1
Servicing the Clutch Unit	2
Double Clutch — Livedrive Tractors (not 1200)	
Operation	5
Adjustments	6
Servicing the Borg and Beck Clutch Unit	8
Servicing the Laycock Clutch Unit	14
Dual Clutch — 1200 (→ 11, 154, 230), Tractors	
Operation	15
Adjustments	16
Servicing the Clutch Unit	16
Twin-Plate Clutch	
Adjustments	21
Servicing the Clutch Unit	22
Refacing Driven Plates	24
Clutch Stop	25
Overload Release Withdrawal Mechanism (Hand Clutch)	26
Clutch Removal and Replacement	
770, 780 and 3800 Tractors	27
880 and 990 Tractors	28
1200 Tractors	31
Clutch Fault Diagnosis	37
Clutch Service Tools	40
Dimensional Data	45
Summary of Design Changes	50

After the majority of this manual section was written, the current range of tractors was introduced. This information continues valid.
Refer as follows:
885 Tractor uses the same Clutch as 880 Livedrive.
995 Tractor (with Livedrive two-stage foot pedal) uses same Clutch as 990.
996 and 995 Tractors with independent hand PTO Clutch use the same Clutch as 1200.
1210 (→ 11, 154, 230) and 1212 Tractors use the same Clutch as 1200.

DUAL CLUTCH — 1210 (11, 154, 230 →), 1410 & 1412 TRACTORS

HOW IT WORKS

The dual clutch contains two separate clutches each with its own release mechanism, assembled into a single unit.

This single unit is bolted to the engine flywheel and consists of a cover enclosing two driven plates, two pressure plates, two sets of release levers, and a set of thrust springs common to both clutches.

The two pressure plates are placed back-to-back between the driven plates, all four plates being positioned between the clutch cover and the engine flywheel. The thrust springs between the pressure plates can, therefore, clamp the PTO driven plate to the engine flywheel and also clamp the transmission driven plate to the inside of the clutch cover.

The transmission clutch release levers are connected by linkage to a foot pedal on the left-hand side of the tractor and the PTO clutch release levers are similarly connected to a hand lever at the left-hand side of the operator's seat.

When both clutches are engaged, both driven plates are clamped to their respective pressure plates by the thrust springs and both drives are transmitted by separate shafts. When the transmission clutch pedal is depressed, the release levers move the transmission pressure plate forward, thus releasing the transmission driven plate and disconnecting the drive.

When the PTO clutch lever is pulled to the dis-engage position, the release levers move the PTO pressure plate rearwards thus releasing the PTO driven plate and disconnecting the drive.

The thrust springs set consists of 12 colour coded coil springs and single Belleville washer. The Belleville washer augments the coil spring pressure and compensates for reduced coil spring pressure as the driven plates wear in service.

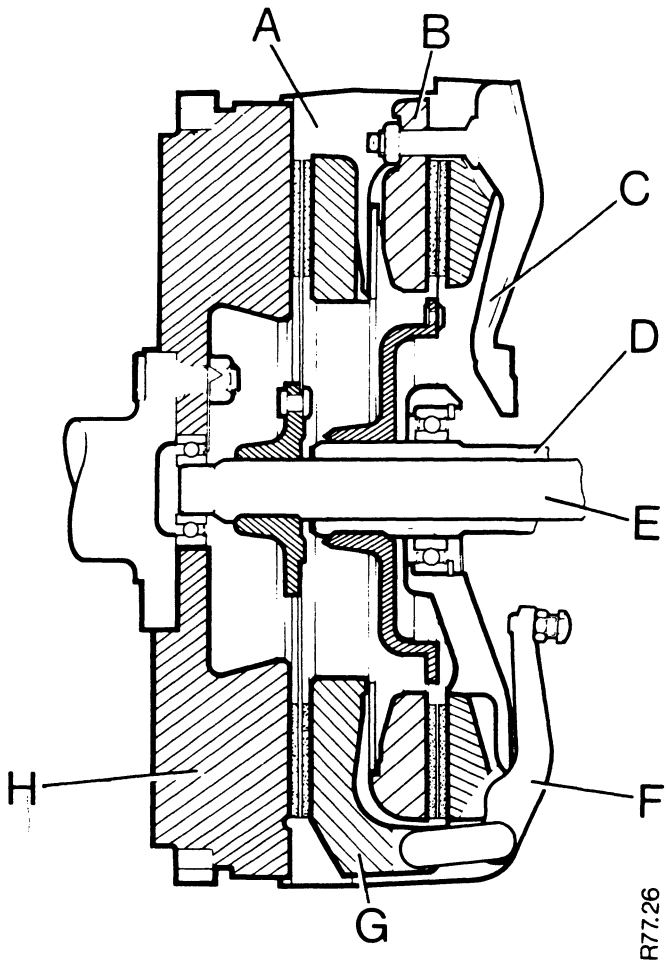

FIGURE B1

A. Clutch Cover
B. Transmission Pressure Plate
C. Transmission Release Lever
D. Transmission Drive Shaft
E. PTO Drive Shaft
F. PTO Release Lever
G. PTO Pressure Plate
H. Flywheel

Removing the Clutch — Figs. B2 to B6

To remove the clutch it is necessary to separate the two main parts of the tractor.

When the tractor is being separated into two parts to service the clutch and a reversible shaft PTO is fitted, the PTO control lever must be placed in the engaged position. This will ensure that the sliding dog clutch gear is held in position if the cardan shaft is withdrawn.

Failure to carry out this precaution will result in additional and unnecessary work as the PTO unit must be removed from the tractor to re-engage the sliding dog clutch gear.

1. Remove the silencer and the bonnet (hood). Disconnect the battery earth (ground) lead and the wiring connector located above the starter. Tractor with Q Cab: remove air pre-cleaner.
2. Remove the fuel tank complete with instrument panel.
   Tractor with Q Cab: lift the front of the cab 75mm (3in) with a jack under each step, and hold in position with wood blocks between the cab and the tractor frame.
   Be careful not to damage the brake cables or flexible pipes.
3. Disconnect the four pipes from the orbitrol steering valve, drain the surplus oil into a suitable container and mark position of the pipes for re-assembly.
   Tractors with Q Cab: disconnect the four flexible pipes from the orbitrol steering valve at the unions positioned forward of the bulkhead. Drain surplus oil into a suitable container and mark position of the pipes for re-assembly.
4. Remove starter motor mounting bolts, lift starter forward and allow starter to rest in main frame.
5. Drain transmission oil into a clean container — capacity approximately 10 gallons (45 litres). Disconnect pump inlet pipe by releasing hose clips at filter end, and pushing short rubber hose back on pipe.
6. Disconnect pump outlet pipe at union mid-way along pipe. Note that when a tandem pump is fitted there are two pump outlet pipes which must be disconnected.

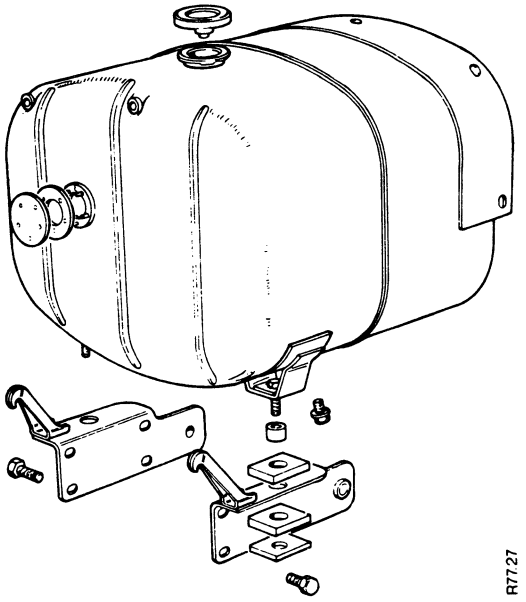

FIGURE B2

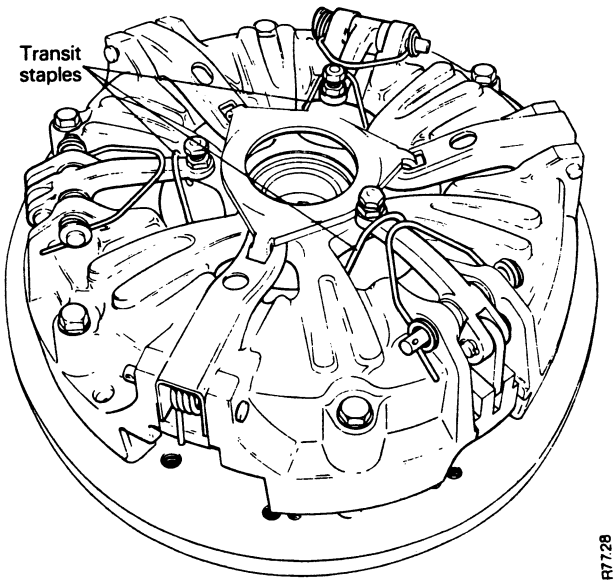

FIGURE B3

7. Disconnect the hand and foot clutch controls by removing the adjusting nuts from the rod ends. Tractors with Q Cab: Disconnect the clutch slave cylinder return spring, remove the two bolts attaching the slave cylinder to the bracket and withdraw slave cylinder complete with push rod. Disconnect the PTO clutch cable by withdrawing the clevis pin connecting the cable to the operating lever.
8. Remove clutch pit cover plate and disengage the transmission clutch pedal pull-off spring from hole in left-hand side of frame.
9. Bolt support legs to the rear end of front frame and adjust legs so that they support but do not lift the frame.
10. Support weight of the rear main frame with a jack or crane positioned slightly forward of the oil filter housing.
11. Remove bolts attaching clutch housing to engine and main frame, also bolts attaching front and rear frame. Using a suitable punch, tap dowels (one at each side) back until they are clear of front frame.
12. Carefully lever the two halves of tractor apart, allowing the release lever to tilt forwards until it is disengaged from bearing sleeve.
13. Disconnect the lubrication pipe from the clutch release bearing housing.
14. When the two halves are separated, push front end forward to allow working space as the clutch is heavy to handle.
15. Fit transit staples between the forged release levers and the clutch cover, and evenly unscrew the six setscrews attaching the clutch to the flywheel.
16. Remove clutch assembly with care as the driven plate will drop out when clutch assembly is removed from flywheel.

Transit staples must be fitted to the PTO release levers before clutch retaining setscrews are released to prevent displacement of Belleville Spring during handling.

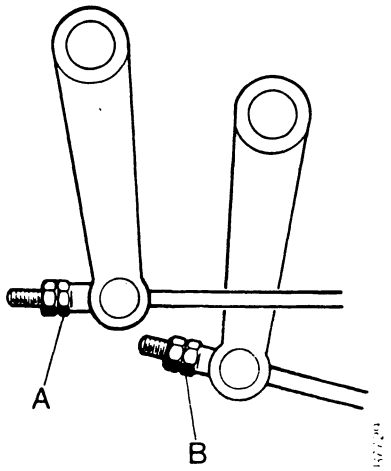

FIGURE B4

A Hand lever adjusting nut
B. Pedal adjusting nut

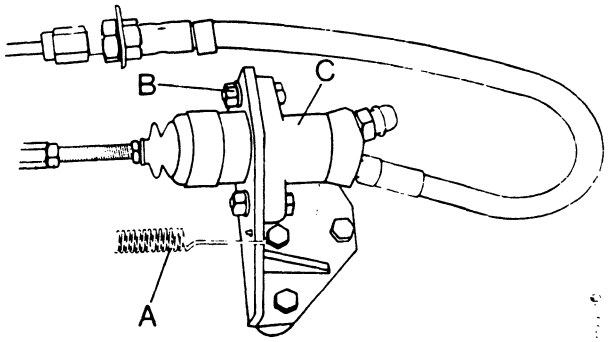

FIGURE B5

A. Spring
B. Bolt
C. Slave Cylinder

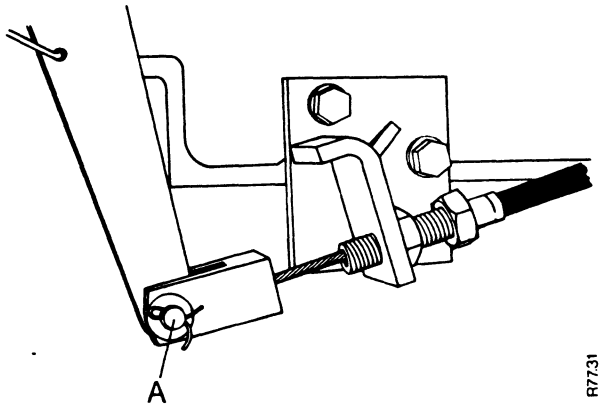

FIGURE B6

A. Clevis pin

17. Fit pilot shaft through clutch assembly and PTO driven plate ensuring that the long boss on driven plate is towards the flywheel. Replace set screws and when fully tightened withdraw pilot shaft and remove transit staples.
18. Screw a 1/2 UNC x 5in long guide stud into each side of main frame.
19. Hold PTO cross-shaft against its pull-off spring so that release fork is horizontal and will pass under the release bearing and bring the two halves of the tractor together.
20. Check that both halves are in line and as soon as they are close enough together, engage PTO fork into its bearing sleeve.
21. Turn the engine to align the clutch plate splines, re-connect the lubrication pipe to the clutch release bearing housing and push the two halves of the tractor together.
22. Replace bolts, tap dowels back into position and tighten bolts.

NOTE: Do not use force to bring the two halves of the main frames together as damage can be caused. When correctly aligned they can be easily pushed into position.

23. Check that PTO release fork is correctly located in its bearing sleeve.
24. Re-connect and adjust clutch linkage.
    Tractor with Q Cab: re-fit clutch slave cylinder and spring. Re-fit clevis pin to PTO clutch cable fork. Adjust free play.
25. Re-fit transmission clutch pull-off spring. It is recommended that a strong length of cord is passed through the frame and secured to the spring hook. A large screw-driver or suitable lever can then be used to stretch the spring until the hook can be correctly located.

WARNING: ***Care must be taken in this operation to avoid personal injury.***

26. Re-fit clutch pit cover plate.
27. Reverse operations 1 to 7.
28. Remove filter assembly and wash screen and clean magnetic filter before replacing.
29. Re-fill transmission with oil.

REMOVAL AND REPLACEMENT

Clutch Release Bearing Sleeve:

Removal — Fig B7

1. Remove left-hand footplate or modify gusset.
2. Pivot cross-shaft lever rearwards to disengage fork and pull sleeve forward off the support snout.

Replacement:

3. Reverse operations 1 and 2.
4. Ensure that operating forks are correctly located and the fork pins are free to rotate.
5. Lubricate fork pins with anti-scuffing paste.

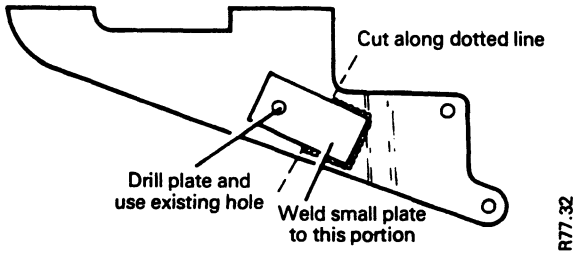

FIGURE B7

Clutch Release Bearings:

Removal — Figs B8 and 9

1. Slide transmission bearing carrier out of PTO bearing carrier.
2. Support inner race of transmission bearing on tool and press carrier out of bearing.
3. Remove circlip from inside of PTO bearing carrier, support carrier and press bearing off carrier.

Replacement:

4. Reverse operations 2 and 3.
5. Pack lubrication cavities in both bores with grease before assembling PTO bearing carrier on to transmission bearing carrier.

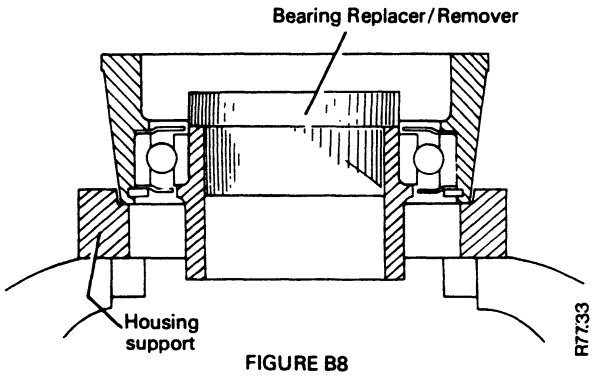

FIGURE B8

Caution: When a new release bearing is to be fitted and the bearing is of the type where the inner track is shielded, it is essential to rotate the bearing as it is being pressed into position.

Failure to do this puts a heavy static load on the bearing, almost certainly resulting in damage which will lead to noisy operation and early failure.

Ensure that the location spigot on the carrier is not damaged during removal of the old bearing and that the new bearing and the carrier are correctly aligned before assembly.

Take care and do not use excessive force.

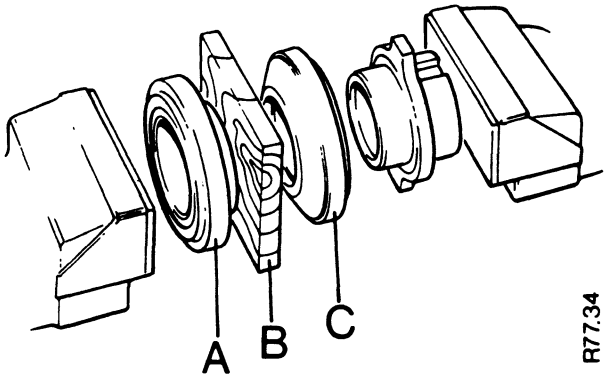

FIGURE B9

A. Old Bearing
B. Wood Block
C. New Bearing

Clutch Cross Shafts

The clutch cross shafts can only be removed when tractor is split.

PTO Cross Shaft

Removal — Fig B10

1. Remove bolts from PTO clutch fork and pull-off spring lever.
2. Remove circlip from right-hand end of cross shaft and withdraw shaft to left, tapping the release fork at the same time. Remove the two keys which locate the clutch fork to allow shaft to pass through the bearing.

Replacement

3. Lubricate shaft bearings.
4. Reverse operations 1 and 2.

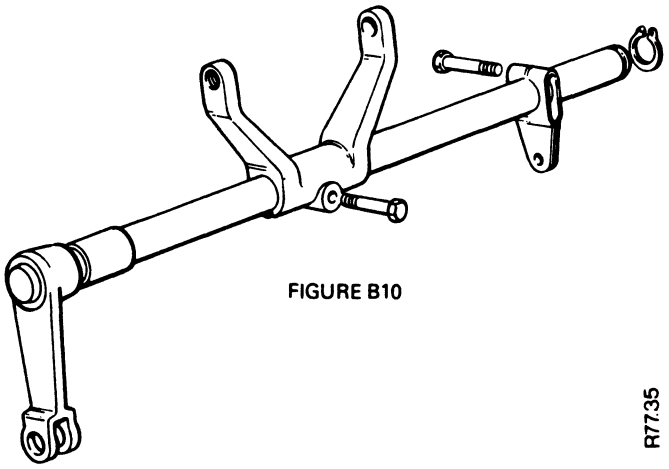

FIGURE B10

R77.35

Transmission Cross Shaft

Removal — Fig B11

1. Remove left-hand footplate.
2. Remove bolts from release fork and pull-off spring lever.
3. Withdraw shaft from left, tapping the release fork at the same time. Remove the two keys to allow shaft to pass through the bearing.

Replacement

4. Lubricate shaft bearings.
5. Reverse operations 1 to 3.

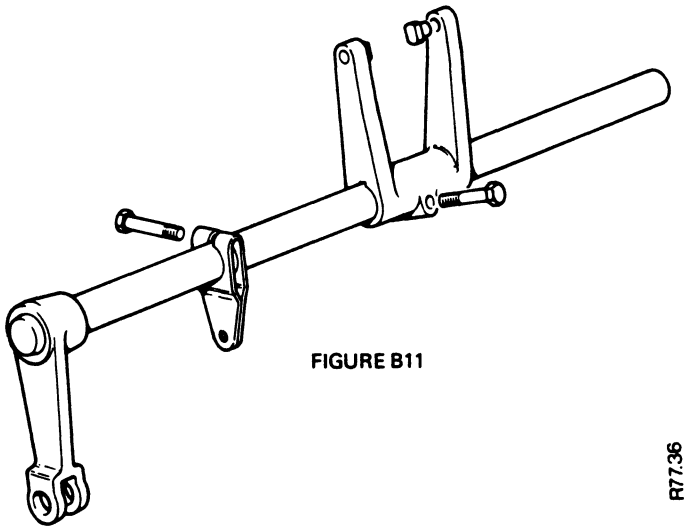

FIGURE B11

R77.36

Clutch Pedal — Not Q Cab

Removal — Fig B12

The clutch pedal is mounted on a tube which passes through the main frame. As this tube also carries the brake cross shaft it is necessary to remove the brake rod and operating lever.

1. Remove the adjusting nut, pin and return spring and withdraw the brake rod.
2. Drive out Mills pin and remove lever.
3. Remove split pin and clevis pin.

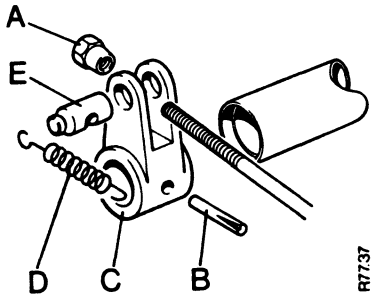

R77.37

FIGURE B12

A. Adjusting nut *B. Mills Pin*
C. Lever *D. Spring*
E. Pin

4. Remove bolts attaching left-hand footplate to frame and fender.
5. Tilt front of footplate upwards and remove pedal.

Replacement

6. Coat cross shaft tube with grease.
7. Reverse operations 1 to 5.

Hand Clutch Lever (PTO)

Removal

1. Slacken adjusting nut.
2. Remove clevis pin, anchor plate and spring and withdraw clutch rod from lower end of lever.
3. Remove right and left-hand brackets.
4. Remove the two bolts from pivot shaft and lower hand lever through footplate.
5. It may be necessary to remove latch lever to allow hand lever to pass through footplate.

Replacement

1. Ensure that pivot shaft is free in lever bore and grease hole is clear.
2. Reverse operations 2 to 5.
3. Adjust free play.

Hand Clutch Lever (PTO) — Q Cab

Removal

1. Disconnect the PTO clutch cable by removing the clevis pin at the fork end.
2. Remove the two bolts attaching the lever bracket to the cab.
3. Push cable upwards at lever end to free the cable nipple from the roller and withdraw the cable through the slot in the roller.

Replacement

1. Reverse operations 1 to 3.
2. Adjust free play. Page B14.

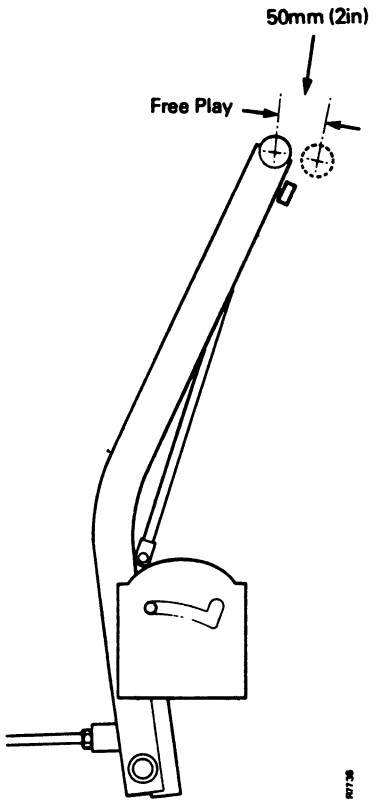

FIGURE B13

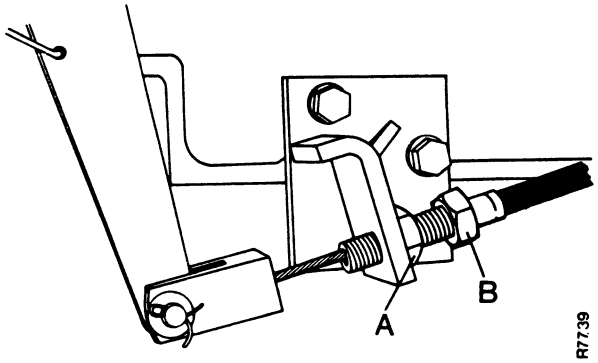

FIGURE B14

A. Locknut
B. Cable Adjuster

Hydraulic Clutch System — Q Cab

NOTE: This information does not apply to Highway Tractors. The components used are similar (or identical) to the parts used in the braking system. To avoid errors, all clutch cylinders and seals are colour coded with a blue band. Ensure that any component fitted has a blue identification band as this indicates that the unit is suitable for use with mineral type oils. NO ATTEMPT MUST BE MADE TO FIT SEAL KITS OR CYLINDERS OBTAINED FROM GIRLING AGENTS. THE CORRECT COMPONENTS ARE ONLY OBTAINABLE FROM DAVID BROWN PARTS DEPARTMENT UNDER THE FOLLOWING PART NUMBERS.

Master Cylinder	K950554
Seal Kit, master cylinder	K964572
Slave Cylinder	K950550
Seal Kit, slave cylinder	K964576

The only fluids approved for use in clutch reservoirs are Shell Tellus 27 and Castrol Hyspin AWS 32. Other fluids are NOT compatible and must NOT be used.

Clutch Master Cylinder

Removal — Fig B15

1. Remove bonnet.
2. Disconnect the two pipe unions at tope of cylinder.
3. Disconnect push rod from clutch pedal.
4. Remove the two bolts attaching cylinder to bulkhead.
5. Lift out cylinder complete with push rod and fork.

Replacement — Fig B16

6. Reverse operations 1 to 5.
7. Adjust threaded end of push rod so that clevis pin freely enters the hole in the pedal with the pedal in contact with the rear-stop.
8. Carefully depress the pedal until the master cylinder piston reaches the end of its travel.
9. Adjust stop bolt in pedal to contact the console and unscrew one further turn to prevent master cylinder piston bottoming in service. Tighten locknut.
10. Bleed system. Page B14.

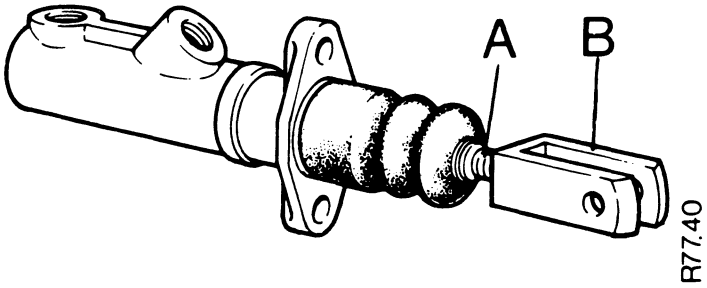

FIGURE B15

A. Push rod
B. Fork

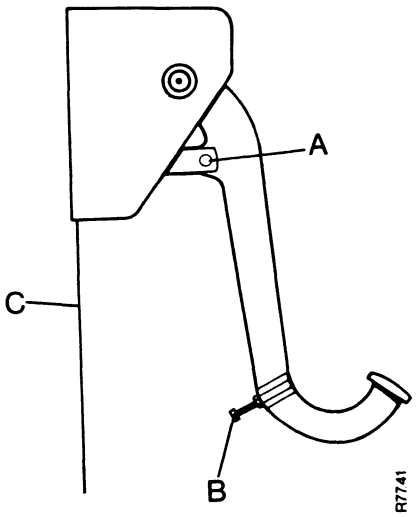

FIGURE B16

A. Clevis pin
B. Stop bolt
C. Console

Clutch Slave Cylinder

Removal — Fig B17

1. Disconnect the return spring.
2. Disconnect pipe union.
3. Remove two bolts attaching cylinder to bracket.
4. Withdraw cylinder complete with push rod.

Replacement

1. Reverse operations 1 to 4.
2. Bleed system (Page B14).

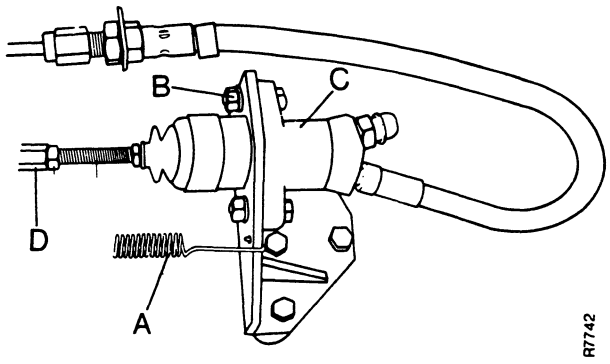

FIGURE B17

A. Spring
B. Bolt
C. Slave cylinder
D. Adjuster

Clutch Operating Adjustments

As the clutch facings wear during service, the amount of free-play or clearance, in pedal or hand lever is gradually reduced until it no longer exists. This results in the pressure plate being unable to clamp the driven plate with sufficient force to prevent the clutch slipping. Operating a tractor under these conditions will rapidly cause total and expensive clutch failure. It is essential to maintain the recommended free-play in the linkages, and adjustments are provided for this purpose.

Transmission Clutch Adjustment — Not Q Cab Fig B18

1. Pull clutch pedal upwards to ensure it is being fully returned to the up position, then depress pedal until the resistance of the clutch springs is felt.
2. Measure the amount of free-play.
3. Adjust to not less than 25mm (1in) by re-positioning adjusting nut and locknut.

NOTE: If pedal can be pulled upwards it indicates either a weak spring or tightness in the linkage. This must be rectified to prevent wear of the clutch release mechanism.

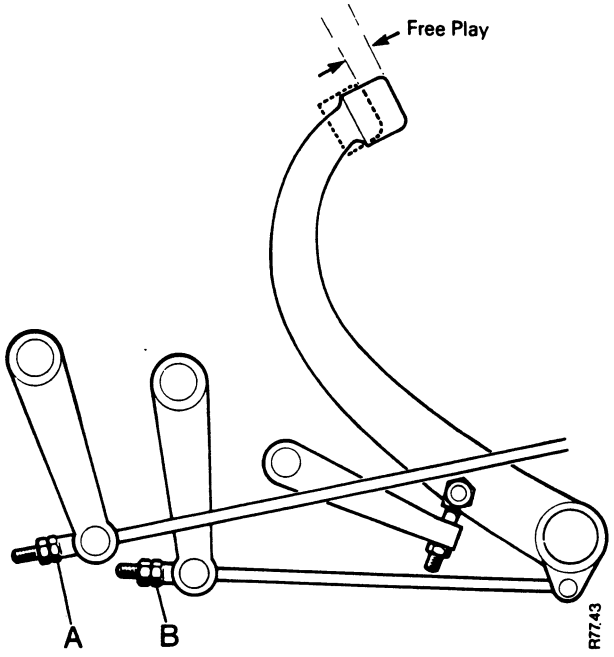

FIGURE B18

A. Hand lever adjusting nut
B. Pedal adjusting nut

Power Take-off Clutch Adjustment — Not Q Cab Fig B19

1. Push hand lever forward to ensure it is being fully returned, then pull lever until the resistance of the clutch springs is felt.
2. Measure the amount of free-play.
3. Adjust to not less than 50mm (2in) by re-positioning the adjusting nut and locknut.

Alternative Method of Power Take-off Clutch Adjustment

1. Pull hand lever rearwards and engage latch.
2. Remove PTO output shaft cover and engage PTO gear.
3. Unscrew hand lever adjusting nut until PTO shaft cannot be turned by hand.
4. Tighten hand lever adjusting nut until PTO shaft can just be turned by hand. Tighten locknut.

NOTE: If hand lever is not returning to the fully forward position it indicates a weak spring or tightness in the linkage. This must be rectified to prevent wear of the clutch release mechanism.

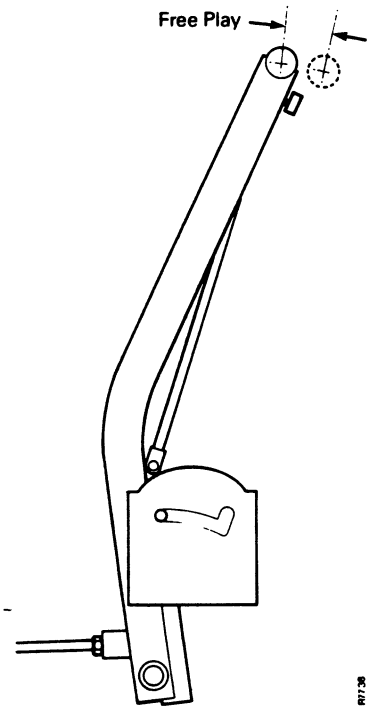

FIGURE B19

Transmission Clutch Adjustment — Q Cab
Fig B20

This should be checked at least every 60 hours of operation and the tractor must **NEVER** be operated with less than 6mm (0·22in) free-play. Adjustment is provided for on the slave cylinder push rod.

1. Ensure that piston in slave cylinder is fully retracted and if not, fit a stronger slave cylinder return spring (Part No. K624954).
2. Disconnect return spring with rod held securely to prevent turning. Loosen locknut and unscrew adjuster until there is no free play. Screw adjuster in two turns, tighten locknut and re-connect spring. Ensure that the slave cylinder piston stays fully retracted.

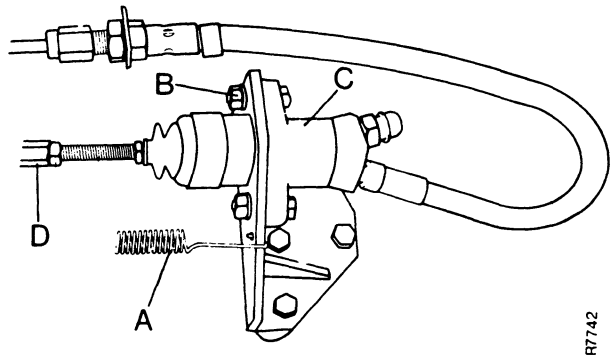

FIGURE B20

A. Spring
B. Bolt
C. Slave cylinder
D. Adjuster

Power Take-off Clutch Adjustment — Q Cab
Fig B21

This should be checked every 60 hours of operation. Adjustment is provided for by the cable adjuster.

1. Place hand lever in forward position and disconnect spring from cross shaft lever.
2. Loosen locknut and unscrew cable adjuster until there is no free play. Screw cable adjuster in one turn. Tighten locknut and re-connect spring.

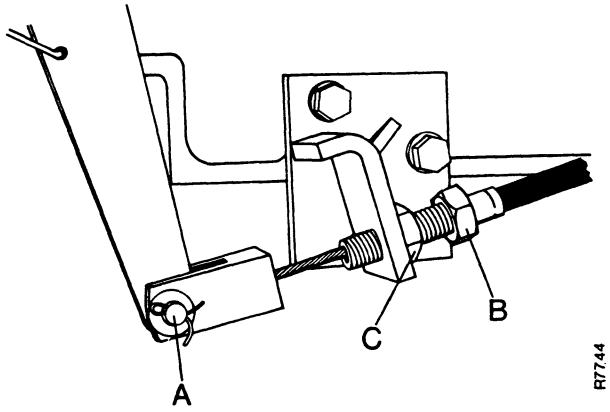

FIGURE B21

A. Clevis pin
B. Cable adjuster
C. Locknut

Master Cylinder and Foot Pedal — Fig B22

If the master cylinder or clutch pedal has been re-fitted proceed as follows.

1. Adjust threaded end of push rod so that clevis pin freely enters the hole in the pedal with the pedal in contact with the rear-stop.
2. Carefully depress the pedal until the master cylinder piston reaches the end of its travel.
3. Adjust stop bolt in pedal to contact the console and unscrew one further turn to prevent master cylinder piston bottoming in service. Tighten locknut.

Clutch Hydraulic System Bleeding

1. Remove all free play from linkage and bleed in the same way as brake circuit.
2. Adjust free play.

Do not bottom clutch release levers when depressing clutch pedal as this could cause clutch damage.

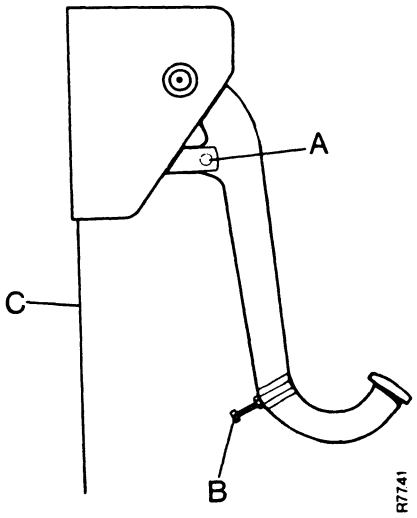

FIGURE B22

A. Clevis pin
B. Stop bolt
C. Console

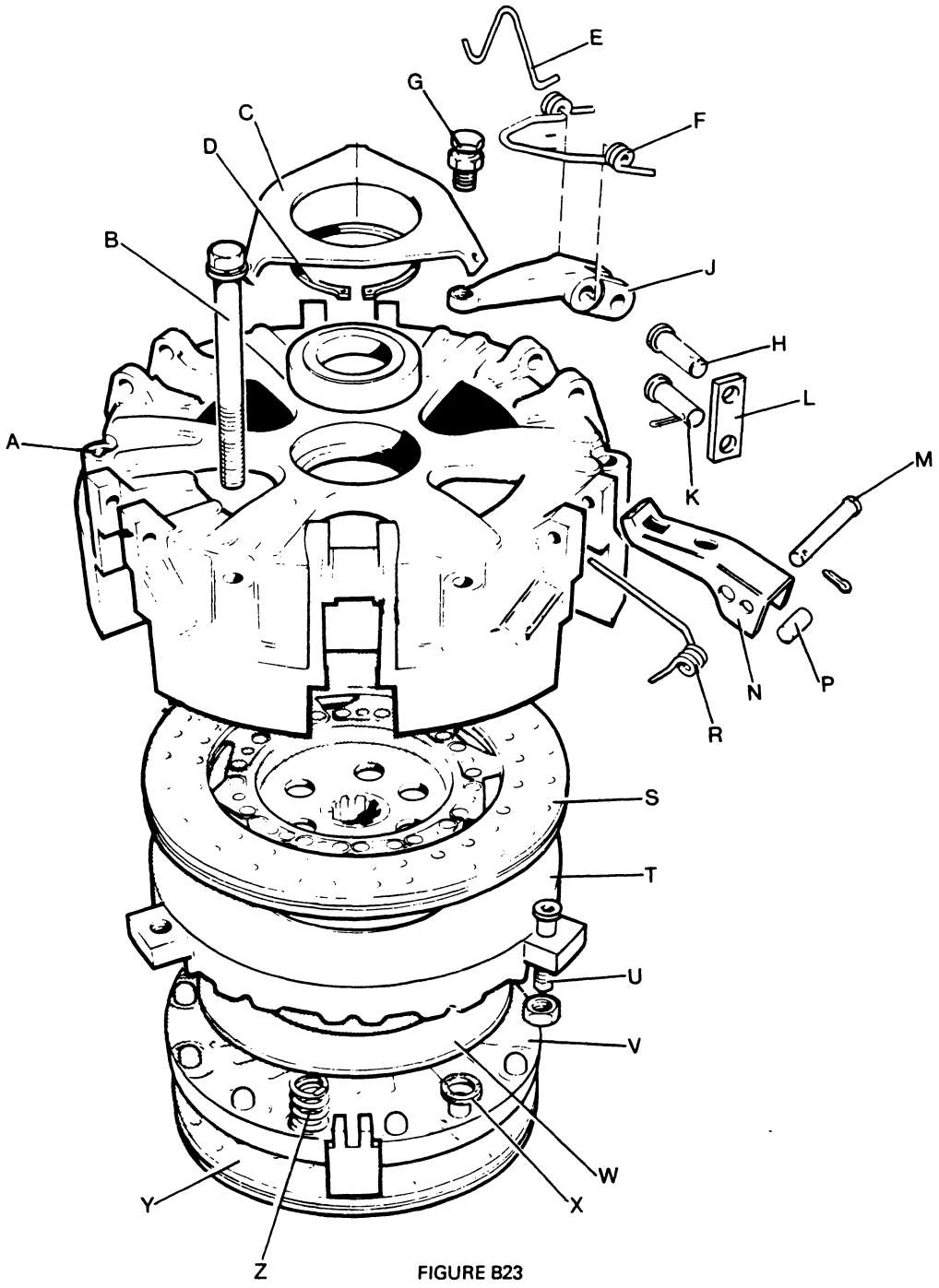

FIGURE B23

DUAL CLUTCH PARTS

A. Clutch cover
B. Setscrew, clutch to flywheel
C. Release lever plate
D. Circlip
E. Transit staple
F. Anti-rattle spring
G. Adjusting screw
H. Link pin, upper
J. Release lever, P.T.O.
K. Pivot pin, lower
L. Link
M. Pivot pin
N. Release lever, transmission
P. Roller
R. Anti-rattle spring
S. Driven plate, transmission
T. Pressure plate, transmission
U. Adjusting screws
V. Pressure plate, P.T.O.
W. Belleville spring
X. Fibre washer
Y. Driven plate, P.T.O.
Z. Thrust spring

SPECIAL TOOLS

Replacing Clutch Assembly

Clutch Plate Pilot — Fig B24

A	22·2 mm—0·874in	F	57·15mm—2·25in
B	23·16mm—0·912in	G	38·1 mm—1·50in
C	38·1 mm—1·50in	H	152·4 mm—6·00in
D	44·93mm—1·769in	J	9·5 mm—0·375in
E	19·05mm—0·75in		

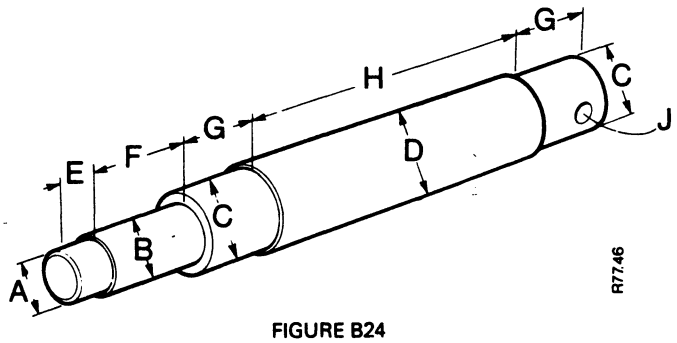

FIGURE B24

Servicing Clutch Assembly

Clutch Kit No. 1 with modified baseplate — Fig B

Clutch Kit No. 8, new kit, DB8832 consisting of the following:

Part No.	Description	Qty.
DB 8832/1	adaptor — centre pillar (transmission)	1
DB 8832/2	spacer, cover to baseplate	6
DB 8832/4	adaptor, centre pillar (PTO)	1
DB 8832/5	setscrew $\frac{3}{8}$ UNC x $5\frac{3}{4}$in	6
DB 8832/6	gauge finger, long	1
DB 8832/12	locating collar, centre pillar	1
Code 33	spacer, PTO pressure plate	3
Code 4	spacer, centre pillar	1
DB 990204	adaptor plate, actuator	1
K 89619A	wrench, $\frac{1}{4}$ in square } transmission release	1
	allen key $\frac{3}{16}$ A/F } lever adjusting screws	1
K 86308	transit staple	3

Baseplate Modification (not applicable to baseplates made after 1st May, 1974)

Position of Additional Holes — Fig B25

1. Mark out one hole, mount clutch assembly on centre pillar with the locating collar in position and spot drill through the remaining cover holes, using a 10·30 mm ($\frac{13}{32}$ in) drill.
2. Drill through baseplate using drill size P or 8·2mm (0·322in), tap holes $\frac{3}{8}$ UNC and countersink face of baseplate to 9·8mm (0·385in) at 90° included angle.
3. Alternatively mark off six holes equally spaced on 336·4-336·7mm (13·244-13·256in) pitch circle diameter, and proceed with operation 2.

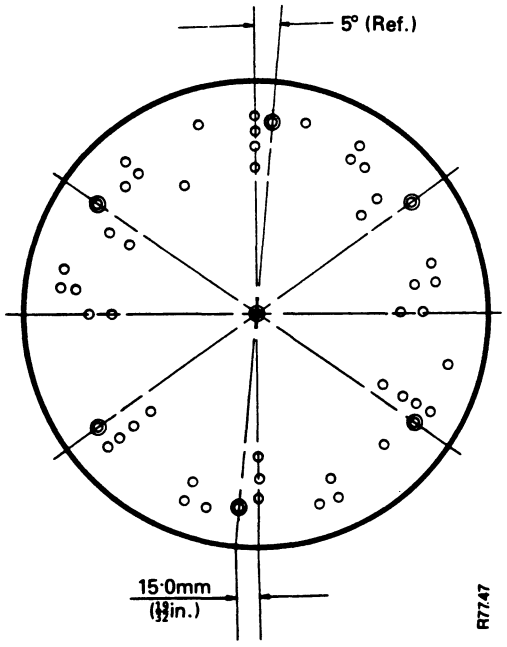

FIGURE B25

Press Tool for Clutch Release Bearings

BEARING HOUSING SUPPORT

A. 4·625in (116mm) Dia.
B. ¼in (6·35mm)
C. 4·937in (125mm) Dia.
D. 1in (25·4mm)
E. 7 degrees
F. 6in (152mm) Square
G. 2in (51mm) Centres
H. 2·3125in (59mm)
J. 0·5in (12·5mm) Dowel x 1 in long
K. 0·5in (12·5mm)

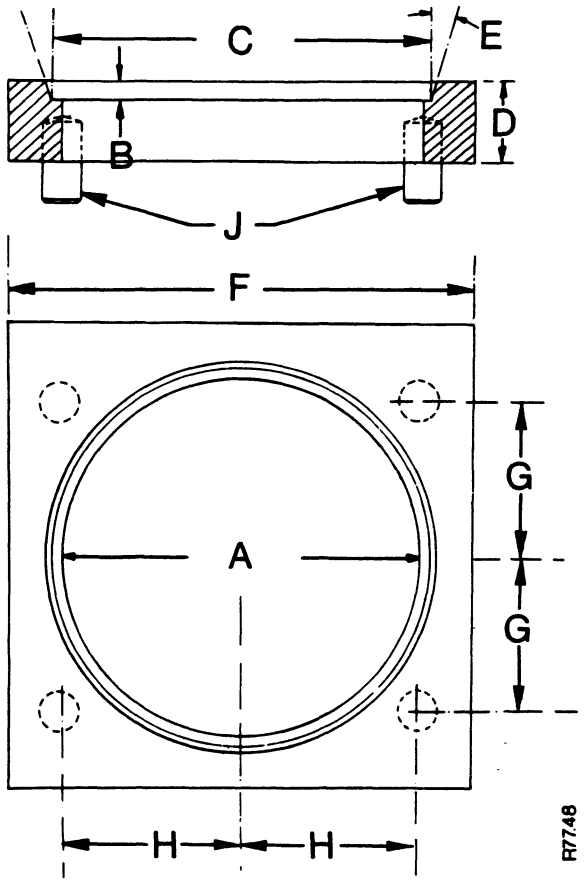

FIGURE B26

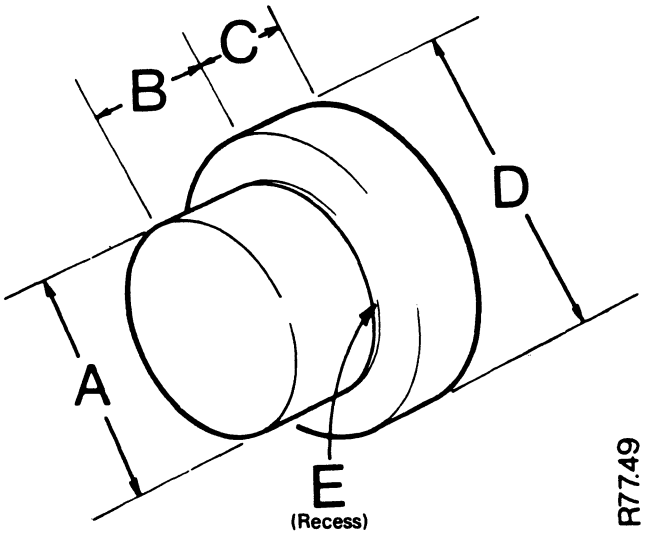

FIGURE B27

RELEASE BEARING REPLACER

Transmission

A. 2·124in (53·95mm)
B. 1·0in (25·4mm)
C. 0·5in (12·7mm)
D. 3·5in (89mm)
E. ⅛ wide x 1/32in deep (3·17 x 0·8mm)

Power take-off

A. 2·624in (66·649mm)
B. 1·0in (25·4mm)
C. 0·5in (12·7mm)
D. 2·98in (75·79mm)
E. 1/32 wide x 1/32in deep (0·8 x 0·8mm)

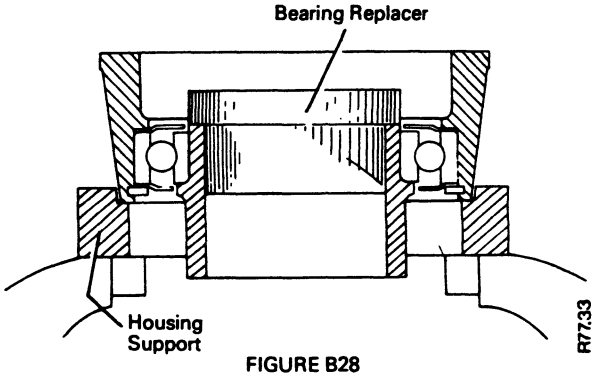

FIGURE B28

REMOVING PTO BEARING

TEMPLATES FOR CHECKING ANGLE OF LEVER RETURN SPRINGS

PTO lever springs — Fig B29

1. On a piece of stiff card draw a base line 'A'—'B' approx. 8in long.
2. Mark a point 'C' 4in from point 'A'.
3. With the aid of a compass scribe arcs 1·25in from point 'A' and 3·5in from point 'C'.
4. Draw a line from point 'C' through the point at which the two arcs intersect. The angle made between this line and line 'C'—'B' is the max. spring angle required i.e. 162°.
5. Place spring over the diagram as shown below. If the spring arms lie within the 162° angle it may be re-used. If the spring arms lie outside the 162° angle it must be replaced. It is useless bending it back to lie within the specified angle.

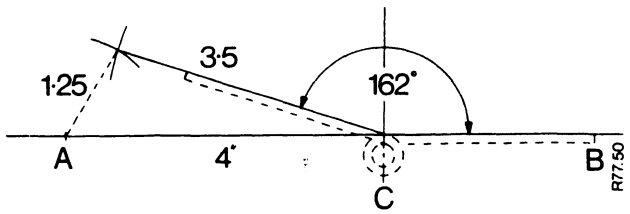

FIGURE B29

Transmission lever springs, Fig B30

1. On a piece of stiff card draw a base line 'A'—'B' 6 in long.
2. With the aid of a compass scribe arc 2½in from Point 'A' and 5·9in from point 'B' where the arcs intersect is point 'C'.
3. Join the points 'A'—'C'.
4. Place the spring over the diagram as shown below. If the spring arms lie within the 75° angle it may be re-used. If the spring arms lie outside the 75° angle it must be replaced; it is no use bending it back to lie within the specified angle.

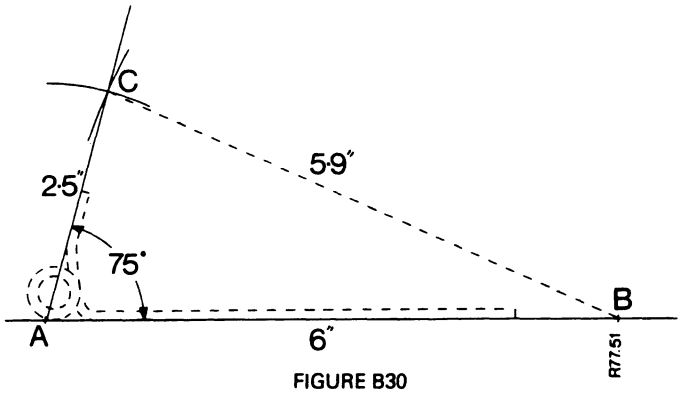

FIGURE B30

Dual Clutch

Dismantling — Fig B31

1. Set baseplate on a firm and level surface.
2. Position the three PTO pressure plate spacers (Code 33) on the baseplate so that the spacers will be directly below the PTO release levers when clutch assembly is fitted.
3. Position the six clutch cover to baseplate spacers (DB8832/2) over the six tapped holes in the baseplate to correspond with the bolt holes in the clutch cover.
4. Place clutch assembly on baseplate taking care not to disturb the position of the spacers.
5. Assemble the locating collar (DB8832/12) on to the centre pillar (K961845) and screw the centre pillar into the baseplate.
6. Place plain washers on to the six setscrews (DB8832/5) and screw them into the baseplate through the clutch cover and the spacers.
7. Tighten the setscrews evenly and firmly and remove transit staples.
8. Mark relative positions of clutch cover and pressure plates to ensure correct re-assembly.
9. Remove upper PTO release lever pivot pins and anti-rattle springs, and swing PTO release levers outwards past the clutch cover.
10. Remove the centre pillar (K961845).
11. Remove the transmission release lever pivot pins, anti-rattle springs and transmission release levers complete with rollers.
12. Unscrew the six setscrews (DB8832/5) evenly until all spring pressure has been released.
13. Remove the locknuts and the transmission release lever adjusting screws.
14. Remove clutch cover, driven plate and pressure plate.
15. Remove Belleville spring, coil springs and insulating washers.

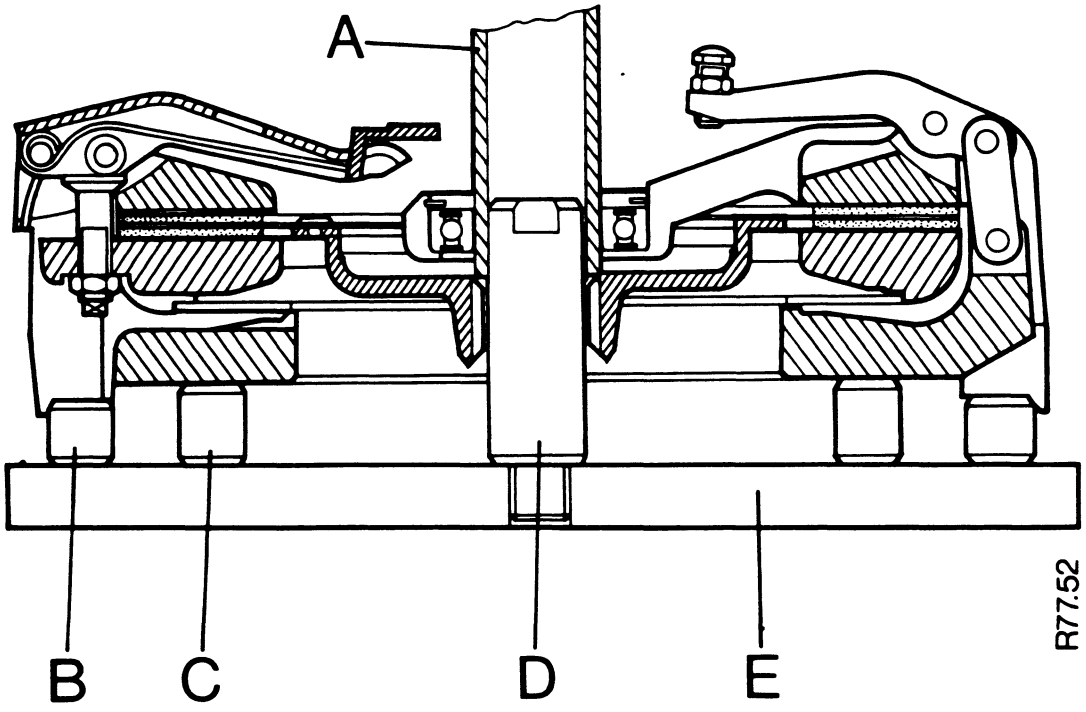

FIGURE B31

A. Locating Collar
B. Spacer DB8832/2
C. Spacer Code 33
D. Centre Pillar
E. Baseplate

16. Remove lower link pins and links.
17. Remove circlip and bearing from clutch cover.

Inspection — Fig B32

After thorough cleaning of parts EXCEPT clutch facings inspect and renew if necessary.

18. PTO release levers, pivot pins and links for wear.
19. PTO release lever adjusting screws for wear on spherical face.
20. Transmission release levers, pivot pins, rollers and adjusting screws for wear.
21. Release lever plate for wear on face or contact points.
22. Pressure plates and clutch cover for distortion, heat cracks and excessive dishing of friction faces.
23. Pressure plates and clutch cover for wear on driving lugs.

NOTE: Renew component if wear exceeds 0·13mm (0·005in) on any one face.

24. Clutch driven plate facings. If badly glazed, burnt, oil soaked, cracked, split or worn to the rivet heads, replace with the correct facings.
25. Clutch driven plate discs for loose rivets and driven plate hubs for spline wear.
26. Bearing for axial play and smooth running.
27. Thrust springs for length and Belleville spring for height. See Specifications and Data. Page B25.
28. Anti-rattle springs for tension.
29. Check fit of PTO cardan shaft in the engine fly-wheel pilot bearing. This must be a free sliding fit; if tight, polish the shaft bearing location with 180 grit emery tape.

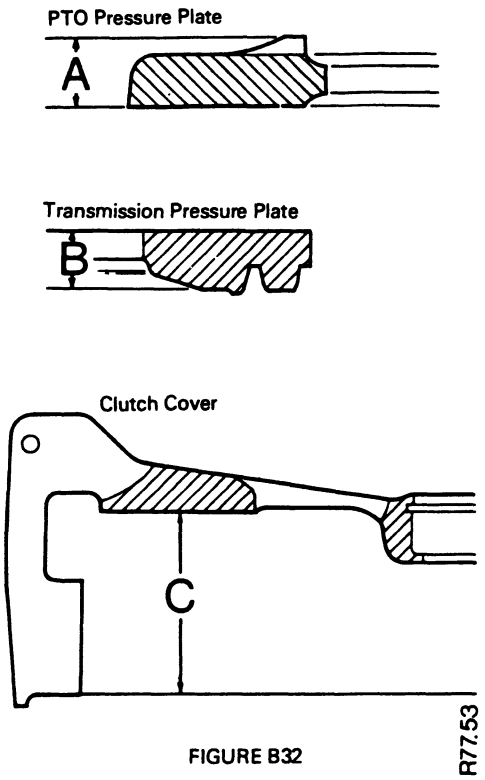

FIGURE B32
REGRINDING LIMITS

A. 25·35mm (0·998in)
B. 28·63mm (1·127in)
C. 74·25mm (2·923in)

Re-assembly — Fig B33

30. Lubricate sides of drive lugs and Belleville spring locations on both pressure plates. Coat lightly with Acheson Colloids GREDAG 15469 or an equivalent type of graphited grease with a minimum temperature range of 150°C (270°F).
31. Repeat operations 1 to 3.
32. Place PTO clutch pressure plate, friction face down, on baseplate.
3. Place twelve new fibre washers on the spring seats and replace the thrust springs and the Belleville spring in their correct locations.

NOTE: Belleville spring outside circumference will be higher than the inside when in position, and is located only by the pressure plates.

34. Assemble PTO levers and links, and connect links to PTO pressure plate. Ensure that links are fitted with the offset holes towards the centre of the clutch.
35. Place twelve new fibre washers on to the transmission pressure plate spring seats, turn plate over, align assembly marks and fit plate on top of thrust springs.
36. Check that all fibre washers are in place and that all the thrust springs are correctly seated.
37. Place the transmission driven plate, dished hub downwards, on to the transmission pressure plate.
38. Replace clutch cover bearing and circlip.
39. Place clutch cover on to transmission driven plate, aligning bolt holes in cover with spacers on baseplate and assembly marks.
40. Fit the six setscrews through the clutch cover and the spacers. Do not tighten.
41. Screw the centre pillar into the baseplate and push locating collar over centre pillar to align the clutch assembly.
42. Tighten the six setscrews evenly until clutch cover is pulled down far enough to allow the PTO release levers to be fitted to the clutch cover.

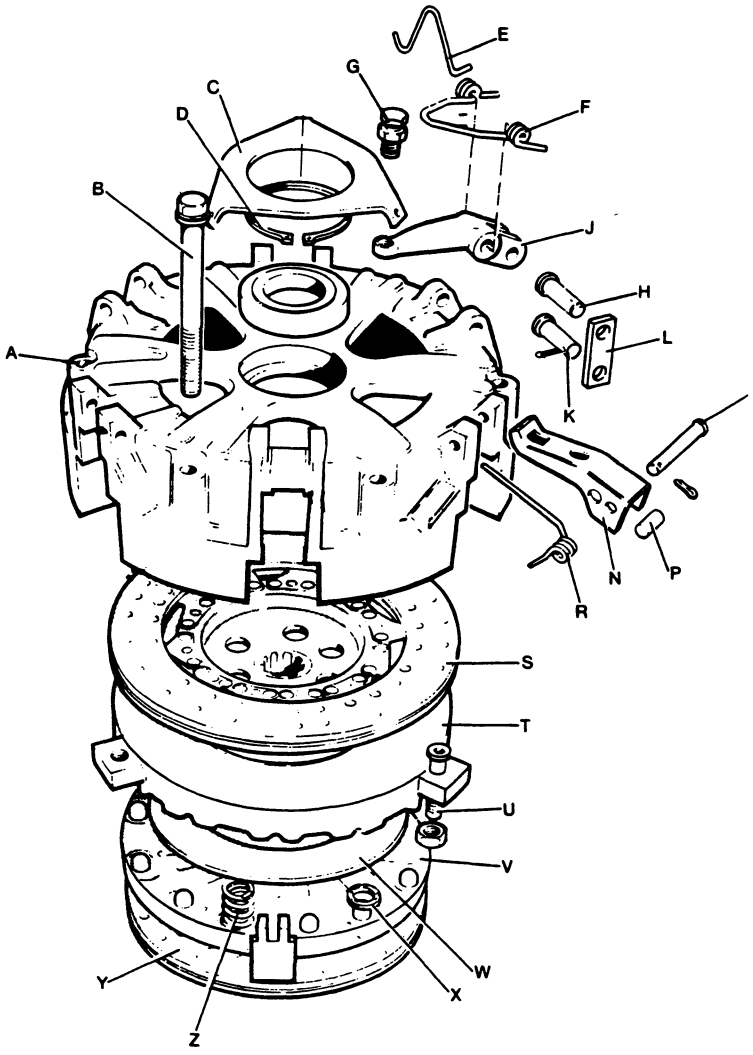

FIGURE B33

A. Clutch cover
B. Setscrew, clutch to flywheel
C. Release lever plate
D. Circlip
E. Transit staple
F. Anti-rattle spring
G. Adjusting screw
H. Link pin, upper
J. Release lever, P.T.O.
K. Pivot pin, lower
L. Link
M. Pivot pin
N. Release lever, transmission
P. Roller
R. Anti-rattle spring
S. Driven plate, transmission
T. Pressure plate, transmission
U. Adjusting screws
V. Pressure plate, P.T.O.
W. Belleville spring
X. Fibre washer
Y. Driven plate, P.T.O.
Z. Thrust spring

During this operation it is essential to ensure that no binding occurs between the pressure plate lugs and the clutch cover. The Belleville spring, which can be viewed through the clutch cover ventilation slots, must remain correctly located in the machined recess of the transmission pressure plate.

43. Locate anti-rattle springs over PTO release levers and refit pivot pins.
44. Firmly tighten the six setscrews and remove locating collar from centre pillar.
45. Re-fit adjusting screws and locknuts into transmission pressure plate. Do not tighten.
46. Assemble rollers into transmission clutch release levers and place in position on clutch cover.
47. With all release levers in position, place the release lever plate, so that lugs pass through the holes in the release levers.
48. Pass the longer end of the anti-rattle spring through the lever and into hole in release plate lug.
49. Align spring loop, lever and cover hole and fit pivot pins.

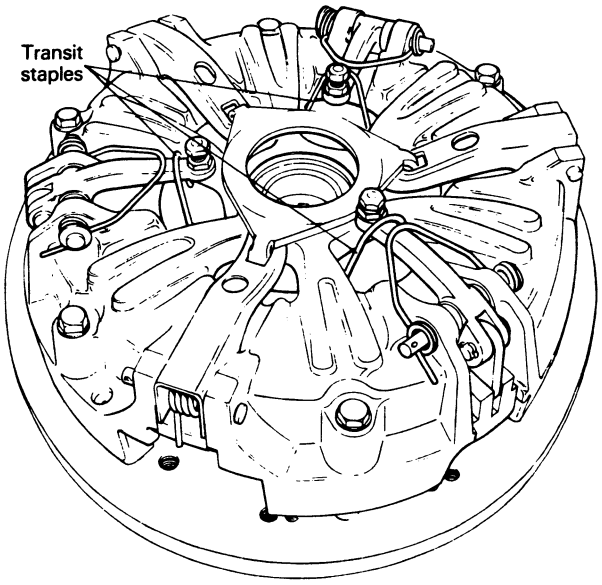

R7728

FIGURE B34

ADJUSTMENTS

Power Take-off Clutch Release Levers — Fig B35

1. Screw actuator assembly (K961844 part of Basic Kit No. 1) with adaptor plate (DB920204), into the PTO centre pillar adaptor (8832/4), and operate the handle at least twelve times.
2. Remove actuator assembly and plate.
3. Screw the Basic Kit No. 1 centre pillar (K961845) into the PTO centre pillar adaptor, place a Code 4 spacer on the centre pillar, and place the setting finger assembly on the spacer.
4. Press the setting finger assembly firmly and squarely on to spacer and set the PTO release lever adjusting screws to contact the face of the fingers. Tighten locknuts.
5. Remove the setting finger assembly and spacer, refit actuator assembly, operate the handle twelve times, refit setting finger assembly and check height setting. Reset if necessary and tighten locknuts.
6. Remove setting finger assembly, spacer, adaptor and centre pillar.

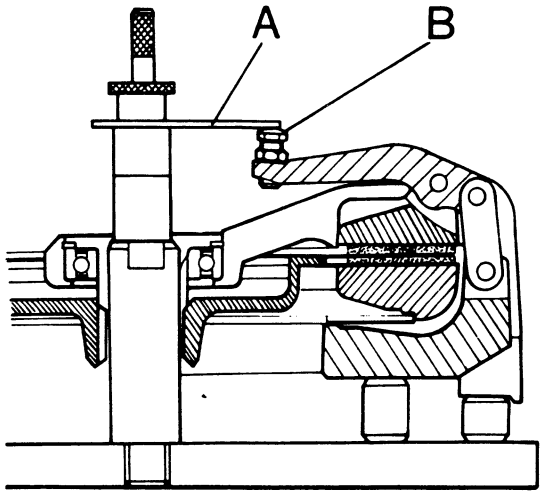

FIGURE B35

R77.54

A. Gauge Finger
B. Adjusting Screws

Transmission Clutch Release Levers — Fig B36

7. Screw the transmission centre pillar adaptor (DB8832/1) into the baseplate, fit actuator assembly and operate the handle at least twelve times.
8. Remove actuator assembly, screw centre pillar into adaptor, and place a Code 4 spacer on centre pillar.
9. Fit finger (DB8832/6) to setting finger assembly and place the assembly on the spacer.
10. Press the setting finger assembly firmly and squarely on to spacer and adjust the screws in the transmission pressure plate until 360° contact is made between the finger and the release lever plate. Tighten locknuts.
11. Repeat operations 5 and 6.
12. Fit transit staples over PTO release levers, remove the six setscrews and lift clutch assembly from baseplate.

Transit staples must be fitted to the PTO release levers before releasing setscrews to prevent displacement of Belleville spring during handling.

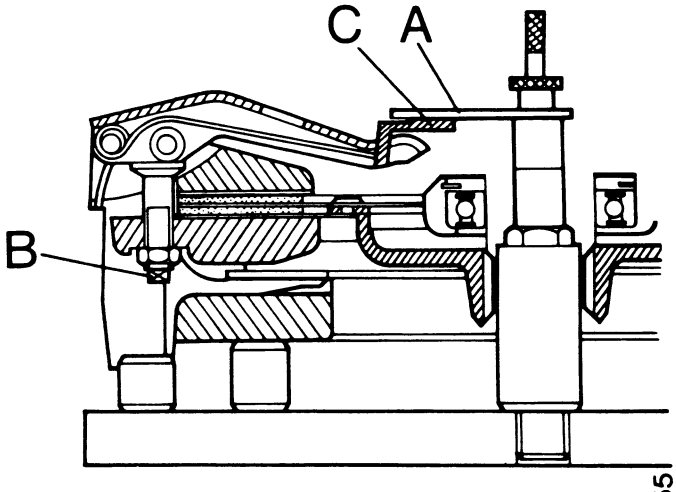

FIGURE B36

R77.55

A. Gauge Finger (long)
B. Adjusting Screws
C. Release Lever Plate

LAYCOCK DUAL CLUTCH

	1412	1210, 1410
Clutch type	Part No. K950876 Laycock No. 86166	Part No. K951600* Laycock No. 86762
Plate diameter — transmission	305mm—12in	
Plate facing material	Thermoid 11046	
Plate thickness — new	9·09mm—0·358in	
Plate diameter — PTO	305mm—12in	
Plate facing material	Capasco F30C	
Plate thickness — new	9·22mm—0·363in	
Number of coil thrust springs	12	
Spring identification colour	Yellow	Pink
Spring free length — minimum	36·45mm—1·43in	38·35mm—1·51in
Spring checking length	28·88mm—1·137in	
Spring pressure at checking length	39-44kg—87·97lb	28-42kg—83-92lb
Number of Belleville springs	ONE	
Spring identification colour	Yellow	Pink
Spring free height — including material thickness	9·27-8·97mm 0·365-0·353in	10·13-9·80mm 0·399-0·386in
Spring minimum height	8·97mm—0·353in	9·80mm—0·386in
Spring checking height	4·29mm—0·169in	4·85mm—0·191in
Spring pressure at checking height	470-570kg 1033-1262lb	580-658kg 1280-1450lb
Release lever springs — transmission		
Wire diameter	3·66mm—0·144in (9 SWG)	
Angle between arms — maximum	75°	
Release lever spring PTO		
Wire diameter	2·64mm—0·104in (12 SWG)	
Angle between arms-maximum	162°	
Refacing dimensions		
Depth of clutch cover — maximum	74·25mm—2·923in	
Thickness of transmission pressure plate — minimum	25·35mm—0·998in	
Thickness of PTO pressure plate — minimum	28·63mm—1·127in	
Pressure Plate lug clearance (new)	0·1-0·2mm—0·004-0·099in	
Pressure Plate lug clearance (maximum)	0·72mm—0·029in	
Pedal free-play — mechanical	25-50mm—1·0-2·0in	
Slave cylinder free-play — hydraulic	6·0-12·0mm—0·236-0·472in	
Hand lever free play — measured at cable adjuster	2·5-5·0mm—0·098-0·197in	

* Clutch assembly Part No. K951600 (marked red) replaces K950876 (marked yellow).

NOTE: The transmission driven plate in clutch assembly K947033 fitted to 1412 tractors only, incorporated spring flights. The Plate thickness is therefore different.

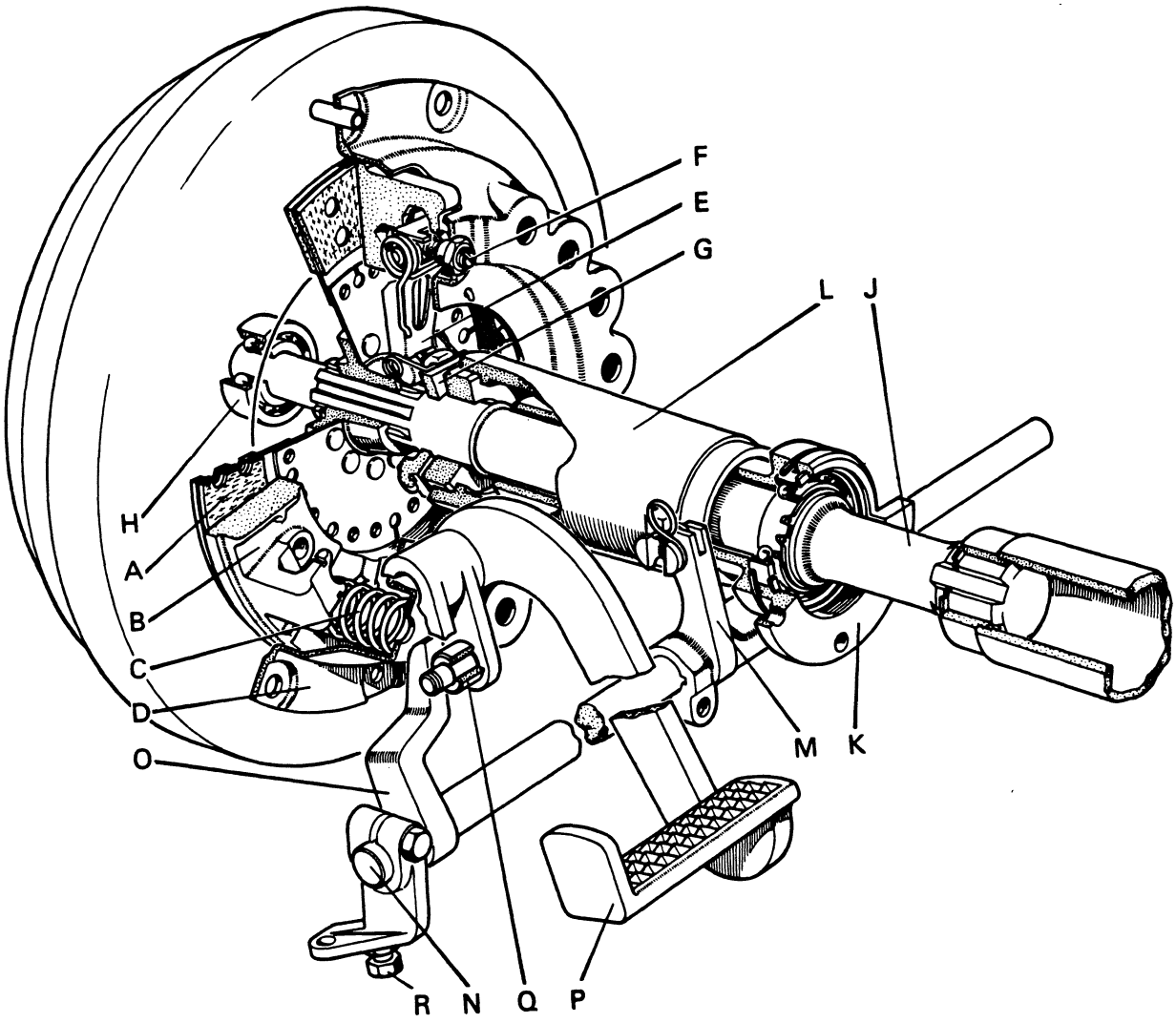

Figure 1 SINGLE PLATE CLUTCH — 990/880 TRACTORS

A.	Driven plate	B.	Pressure plate	C.	Thrust spring	D.	Cover
E.	Release lever	F.	Eye bolt	G.	Release lever plate	H.	Spigot bearing
J.	Clutch shaft	K.	Support snout	L.	Release bearing	M.	Release fork
N.	Cross shaft	O.	Operating lever	P.	Pedal	Q.	Roller
				R.	Adjusting screw		

SINGLE PLATE CLUTCH — NON-LIVEDRIVE TRACTORS

Description

The clutch is of the dry plate type and consists of a driven plate, cover assembly and withdrawal mechanism.

The driven plate consists of a thin steel disc with a splined hub riveted to the centre and friction facings riveted to each side of the outer edge. The cover assembly is built up from a steel pressing and incorporates a cast iron pressure plate loaded with thrust springs. Mounted on the pressure plate are three release levers which pivot on floating pins retained in the eyebolts and transmit movement to the pressure plate through struts.

Operation — 880 and 990 Tractors

The withdrawal mechanism shown in Fig. 1 is that used on 880 and 990 Tractors. As the clutch pedal is depressed, the lever turns the cross shaft which moves the carbon block forward by means of the fork. As movement of the carbon block is transmitted to the release levers by the lever plate, the levers pivot on the pins and draw pressure plate away from flywheel by means of the struts, thus releasing the driven plate and disengaging the drive.

Adjustment—880 and 990 Tractors

The only adjustment required in service is the maintaining of clutch pedal "free play" from 1 to 1½ in. (2·5 to 3·8 cm). To adjust pedal free-play,

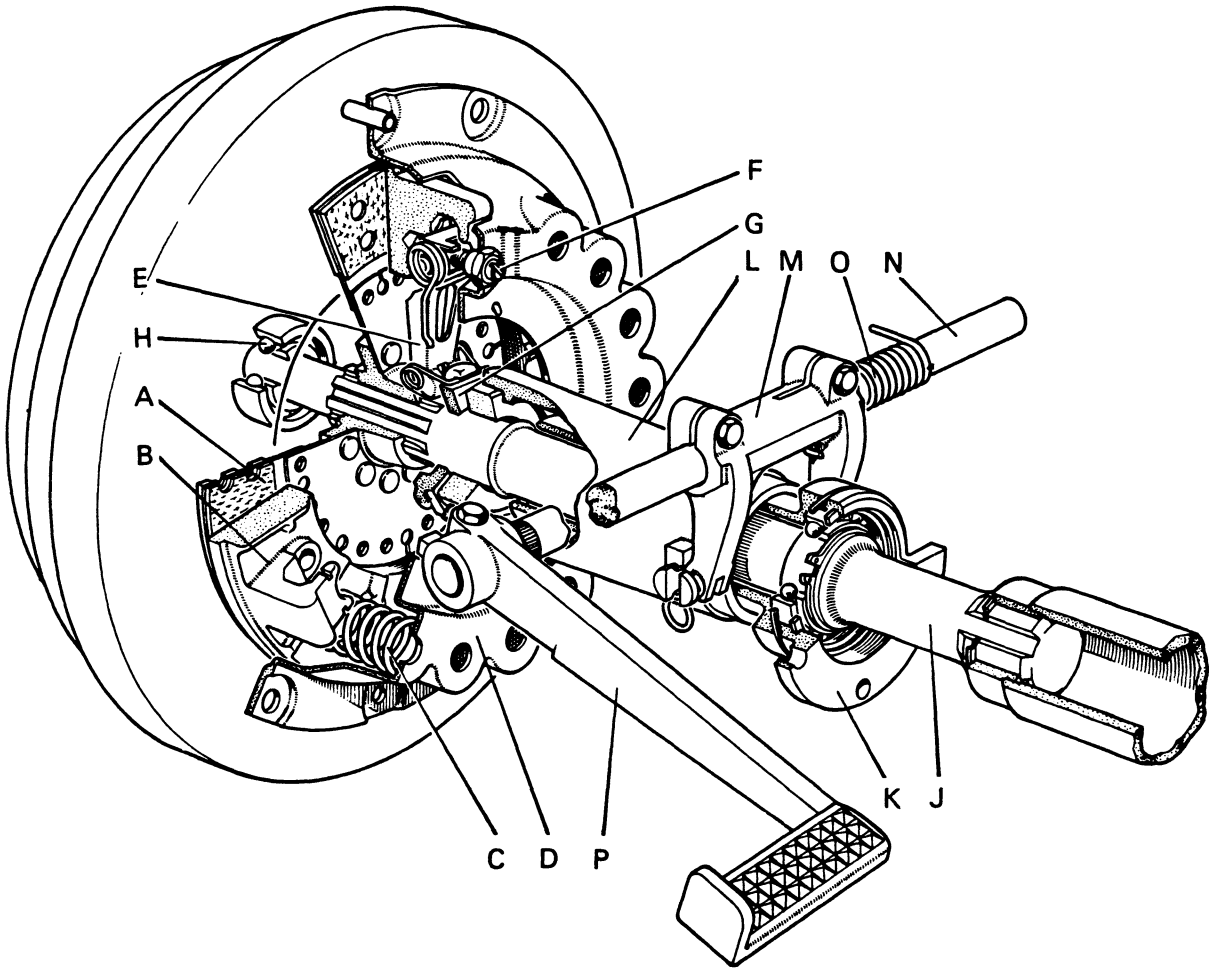

Figure 2 SINGLE PLATE CLUTCH — 770 TRACTOR

A. Driven plate	B. Pressure plate	C. Thrust spring	D. Cover
E. Release lever	F. Eye bolt	G. Release lever plate	H. Spigot bearing
J. Clutch shaft	K. Support snout	L. Release bearing	M. Release fork
N. Cross shaft	O. Pedal return spring	P. Pedal	

release locknut and turn adjusting screw until correct movement is obtained. Retighten locknut.

If hand clutch is fitted (see page 26) the rod adjusting nut should be slackened before adjusting pedal free-play and then reset afterwards to give a clearance of $\frac{1}{16}$ in. (1·5 mm).

Operation — 770 Tractors

The clutch pedal on the 770 Tractor is fitted directly on to the cross shaft, which is housed in the gearbox cover and not in the main frame as on the other models (see Fig. 2). Operation of the clutch withdrawal mechanism is, otherwise, the same as on the 880 and 990 Tractors.

Adjustment — 770 Tractors

The only adjustment required during service is the maintaining of $\frac{1}{2}$ to $\frac{3}{4}$ in. (1–2 cm) pedal free-play, to ensure that the withdrawal mechanism is disengaged when the pedal is released.

As the drive plate facings wear, pedal free-play will be reduced and when necessary should be reset by screwing the stop screw further into the main frame. When the pedal has insufficient free-play and the stop screw is screwed fully inwards, the pedal should be removed from its shaft, turned clockwise into the next serration, and refitted on shaft. The adjusting screw can then be screwed outwards until correct free-play is obtained.

As the cross shaft will turn, due to the action of the shaft return spring, when the pedal is removed, it is advisable to mark the original positions of the shaft and pedal so that the new position can be easily found.

Servicing the Single-Plate Clutch Unit

1. Mark the position of the release levers, cover plate, pressure plate, and eyebolts so that these may be refitted in the same position should new parts be unnecessary.

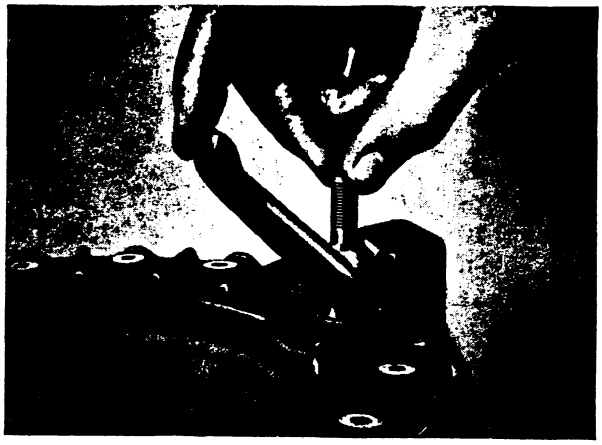

Figure 3. REMOVING THE RELEASE LEVERS



Figure 4. REPLACING STRUT AND RELEASE LEVER

2. Place the assembly on a press, with a block under the pressure plate positioned so that the cover is free to move down. Place a block or bar across top of the cover, resting on the spring bosses.

3. Compress the cover against pressure plate, unlock and remove eye nuts. Slowly release the pressure on cover until the thrust springs are fully extended.

4. Lift off cover, and remove thrust springs. Remove release levers (Fig. 3), clean and examine all parts.

5. To assemble clutch, place pressure plate on the block and replace release levers and struts (Fig. 4), taking note of the marks made during dismantling and applying a smear of grease to the pivot pins and struts.

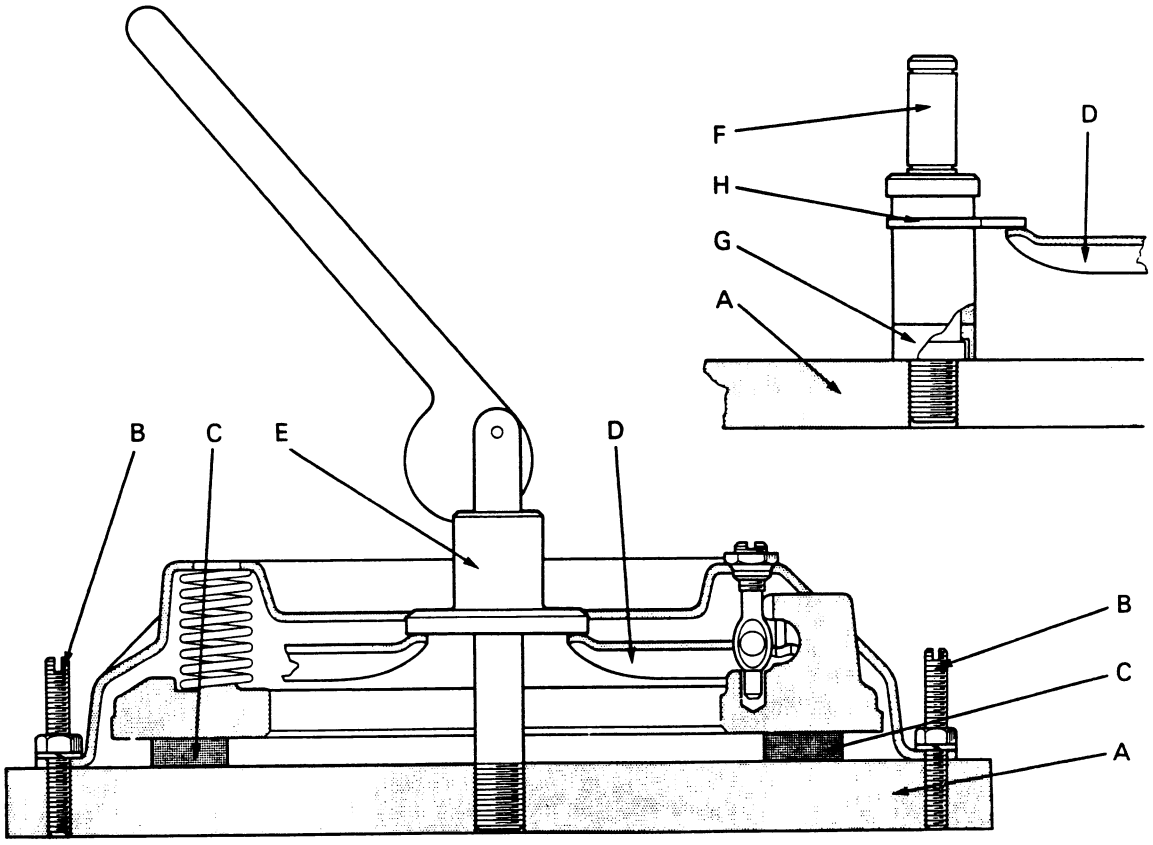

Figure 5 CHECKING RELEASE LEVER HEIGHT

A. Base plate
B. Studs
C. Spacers — pressure plate
D. Release lever
E. Actuator
F. Centre pillar
G. Spacer — centre pillar
H. Setting finger

6. Replace thrust springs on the pressure plate bosses and place cover in position on top of the springs, after ensuring that the three anti-rattle springs are in position on cover and the marks made during dismantling are in alignment.

7. With the second block placed across cover, as in dismantling, compress thrust springs until the eyebolt nuts can be replaced.

8. Remove clutch assembly from the press and depress release levers two or three times to settle the working parts.

Operations 1–8 can alternatively be carried out using the Clutch Tool (see Service Tool Leaflet A3). The clutch should be bolted on to the base plate, Part No. 912917, using the long studs and nuts in the kit. The thrust springs are released by gradually unscrewing the nuts on the long studs so allowing clutch cover to lift away from pressure plate.

After reassembly the clutch should be set up as follows, using the clutch tool (Fig. 5, Page 3):

9. Fit No. 3 Code spacers in place of the driven plate. Position a spacer opposite each release lever, bolt clutch to base plate and fit the actuator assembly. Operate the actuator lever a few times to "bed in" the release lever mechanism.

10. Remove actuator and fit centre pillar with the correct spacer, recess downwards.

    For 9 in. clutch (770 Tractor) use centre pillar spacer Code No. 8

    For 10 in. clutch (880 Tractor) use centre pillar spacer Code No. 8

    For 11 in. clutch (990 Tractor) use centre pillar spacer Code No. 16x.

    Check release lever heights with setting finger and reset if incorrect.

11. Refit actuator and operate clutch a few times, finally rechecking the release lever heights before **locking the adjusting nuts by peening the cylindrical portion of the nut into the eyebolt.**

12. Fit release lever plate and secure by fitting the three retaining springs. Before moving clutch from flywheel or base plate, replace the three nuts used as packing pieces betwee the cover and release levers.

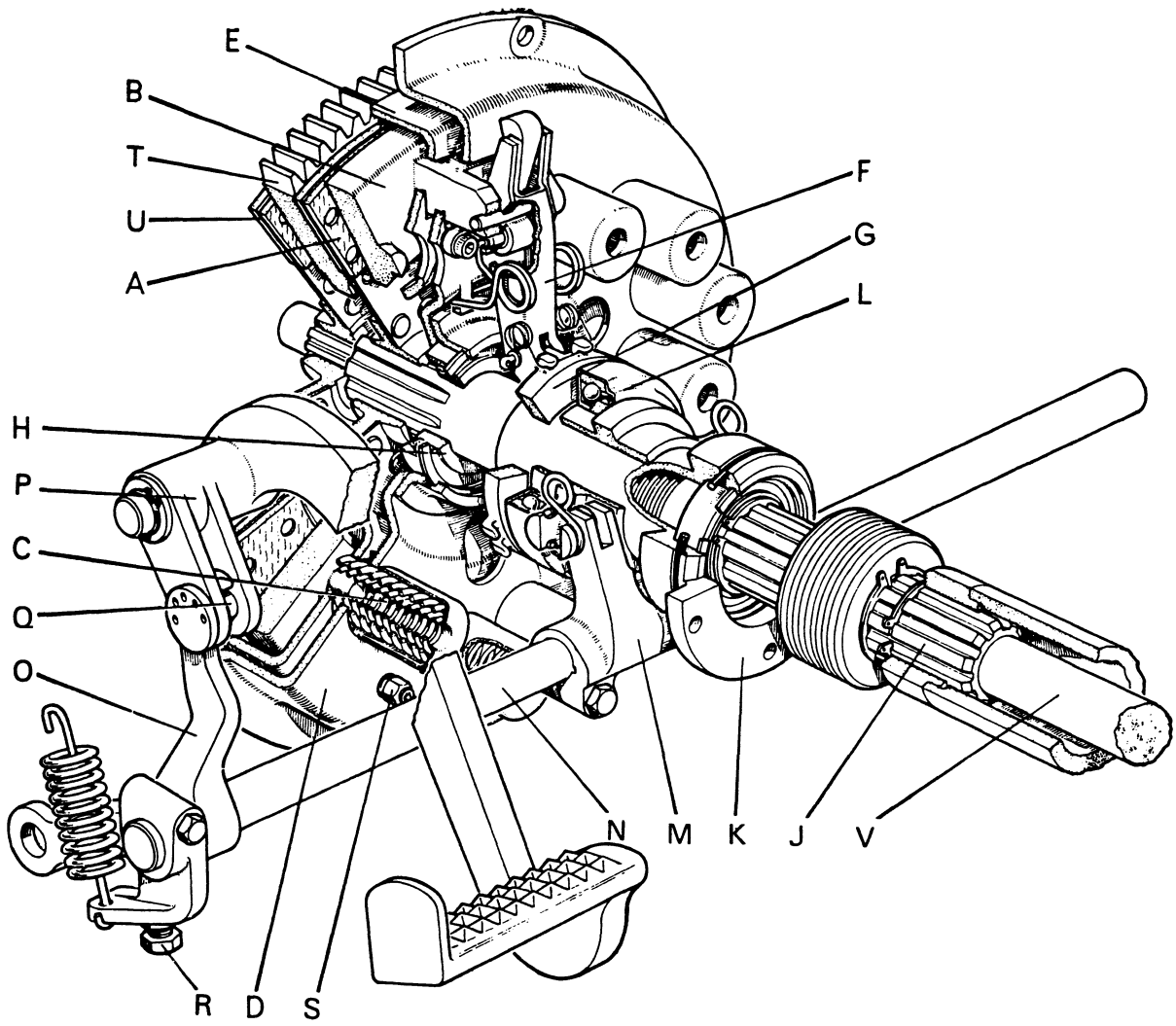

Figure 6 DOUBLE CLUTCH — 880/4600/990 LIVEDRIVE TRACTORS

A. Driven plate — transmission	B. Pressure plate	C. Thrust springs	D. Cover — outer
E. Cover — inner	F. Release lever	G. Release lever plate	H. Bearing
J. Clutch shaft	K. Support snout	L. Release bearing	M. Release fork
N. Cross shaft	O. Operating lever	P. Pedal	Q. Roller
R. Adjusting screw — pedal	S. Adjusting screw — cover	T. Separator plate	U. Driven plate — PTO
	V. Driveshaft — PTO		

DOUBLE CLUTCH — LIVEDRIVE TRACTORS

Description: The double clutch is in effect two separate clutches mounted in tandem and controlled by a common pedal. The inner clutch (which is nearest the flywheel) transmits the drive to the hydraulic lift pump and power take-off and the outer clutch transmits the main drive to the gearbox. Disengagement of the main drive clutch does not, therefore, disengage the drive to the power take-off or hydraulic pump, which remain in operation until the second clutch is disengaged.

Operation — 880, 4600 and 990 Tractors

The operating mechanism shown in Fig. 6 is used on the 880, 4600 and 990 tractors. As the clutch pedal is depressed the pressure plate is drawn rearwards by the action of the release levers until the rear (transmission) drive plate is free and the adjusting screw clearance is reduced from 0·070 in. (1·78 mm) to 0·009-0·012 in. (0·23-31 mm). During this first stage the pedal roller will have moved along the cross shaft lever until it is in contact with both faces. Further movement of the clutch pedal will cause the roller to continue turning the

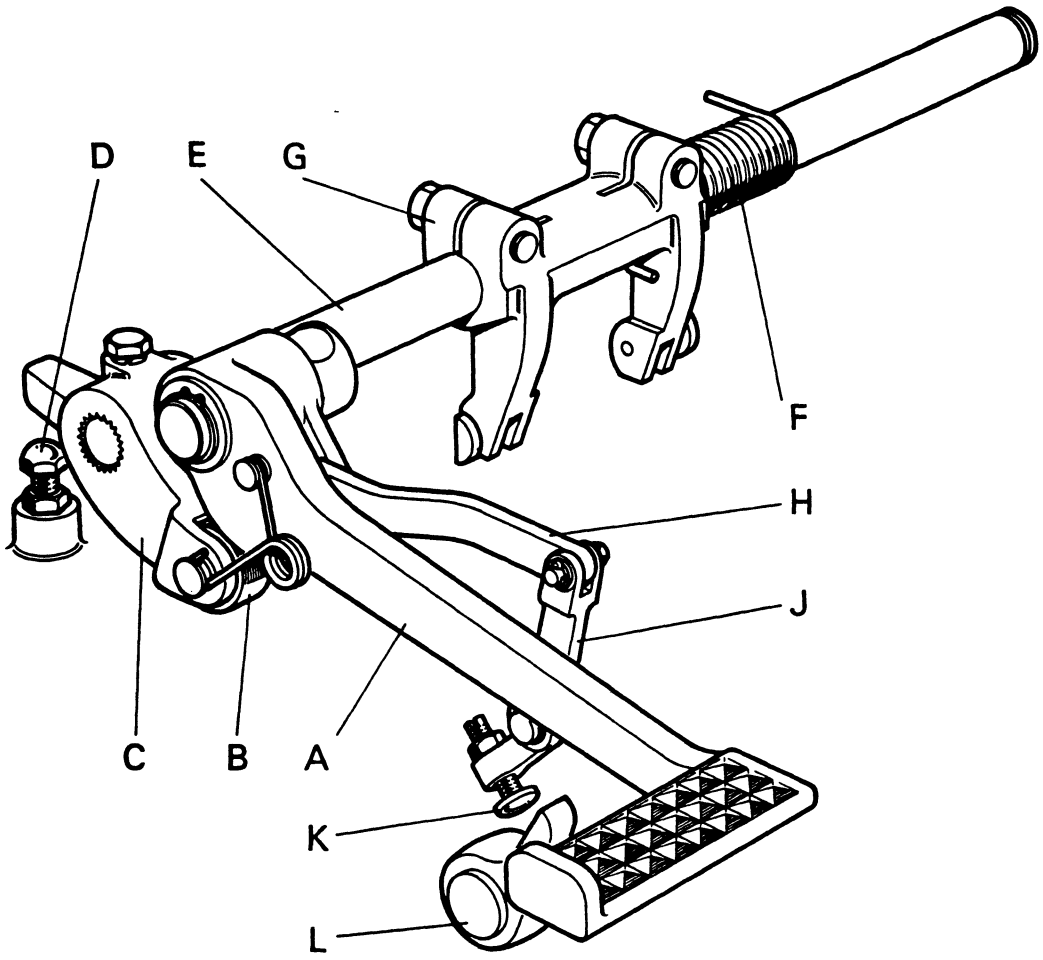

Figure 7. CLUTCH OPERATING MECHANISM — 780/3800 TRACTORS

A. Pedal B. Roller C. Operating lever D. Stop bolt
E. Cross shaft F. Return spring G. Fork H. Connecting link
J. Lever K. Adjusting screw L. Shaft — clutch stop

cross shaft and cause the pressure plate to move further to the rear until the adjusting screw clearance is reduced to zero: this is the second stage movement. Further movement of the pedal beyond this point (third stage) will also move the inner cover to the rear as the pressure plate is now in contact with the adjusting screws. As inner cover is withdrawn the pressure on separator plate is released so that the three flywheel springs move the separator plate rearwards, thus disengaging the PTO clutch plate.

Adjustment — 880, 4600 and 990 Tractors

As the clutch linings wear during service the separator plate and pressure plate will move closer to the flywheel and reduce the amount of pedal free-play. This should be adjusted by slackening the locknut and turning the adjusting screw until free-play is 1 to 1½ in. (2·5 to 3·8 cm). If a hand clutch is fitted (see page 26) the adjusting nut on the connecting rod should be slackened before adjusting free-play and then reset afterwards to give a clearance of $\frac{1}{16}$ in. (1·5 mm). (Fig. 6.)

Note: The eccentric roller pin is set during manufacture and should not normally require resetting, unless new parts are fitted to the operating mechanism.

If difficulty is experienced in freeing PTO clutch, or if clutch unit has been removed, proceed as follows:

1. With the clutch housing fully tightened down, adjust the pedal free-play from 1 to 1½ in. (2·5 to 3·8 cm).
2. Set the three inner cover adjusting screws to give 0·070 in. (1·78 mm) clearance between the pressure plate and the end of the screws. The adjusting screw clearance can be checked by inserting a feeler gauge through the holes in the outer cover. If clutch housing is in position the adjusting screws are accessible when clutch pit cover (919568) is removed and engine turned to bring the screws opposite the cover aperture.
3. Depress clutch pedal until pedal roller is in contact with both faces on cross shaft lever then check the cover adjusting screw clear-

ance. If the adjusting screw clearance is not 0·009–0·012 in. (0·23–0·31 mm) adjust by rotating the eccentric pin to the next position. (Move clockwise to increase the clearance and anti-clockwise to decrease it.) One hole movement gives approximately 0·005 in. (0·13 mm) adjustment.

4. If the correct clearance still cannot be obtained, reset the three adjusting screws to within the limits 0·065–0·072 in. (1·65–1·83 mm) to obtain correct clearance.

5. Reset pedal free-play to 1–1½ in. (2·5–3·8 cm) If new facings have been fitted set free-play to 1½ in. (3·8 cm.) to allow for bedding in.

Adjustment — Laycock Clutch: A number of 880 Tractors are fitted with a Laycock clutch, and pedal free-play adjustment on these tractors is exactly the same as the pedal adjustment previously described for tractors fitted with a Borg and Beck clutch. The internal adjustment is, however, different and if the power take-off clutch does not fully disengage when the pedal is fully depressed the adjusting screws on the three release levers should be adjusted as described in next column for 780 Tractors.

Operation — 780 and 3800 Tractors

The operating mechanism used on 780 and 3800 Tractors is shown in Fig. 7. As the clutch pedal is depressed the roller in the cross shaft fork rolls along the pedal cam and turns the cross shaft. When the pedal is depressed approximately halfway the cross shaft is only turned sufficiently to withdraw the pressure plate, far enough to release the main drive plate but not far enough to contact the three adjusting screws on the inner cover. The power take-off clutch therefore remains engaged and only the drive to the transmission is disconnected.

When the clutch pedal is fully depressed the cross shaft is turned so far that the pressure plate is drawn past the point where it contacts the three inner cover screws. The inner cover is thus also withdrawn and both transmission and power take-off clutches are disengaged.

Adjustment — 780 and 3800 Tractors

As the clutch linings wear during service the separator plate and pressure plate will move closer to the flywheel and reduce the amount of pedal free-play, thus pedal adjustment should be checked frequently and, when necessary, adjusted by means of the stop bolt in the main frame. This bolt determines position of pedal when clutch is engaged; screwing the bolt further into frame will increase pedal travel and also increase the amount of free-play. The screw should be set so that pedal free-play is ¾ to 1 in. (1·9 to 2·5 cm) and if this amount of free-play cannot be obtained because the screw head is screwed right down on to the locknut more adjustment can be obtained by repositioning the operating lever on cross shaft. First scribe a line across the lever and cross shaft end (this will enable the new position to be checked against the original position), then remove the two pedal springs and operating lever clamp bolt. Slide operating lever towards the end of shaft so that the splines are exposed behind the lever then firmly grip cross shaft with a pair of pliers and, whilst holding shaft clockwise against return spring inside the cover, remove lever and refit on the next clockwise spline. Check scribe marks to make sure the lever has been moved only one spline and in the correct (clockwise) direction, then refit the clamp bolt and springs and re-adjust the stop bolt.

If the amount of pedal free-play is correct, but the power take-off clutch does not fully disengage when the pedal is fully depressed, this is probably due to excessive clearance between pressure plate and inner cover adjusting screws.

To reset inner cover adjusting screws, remove cover plate from right-hand side of clutch housing and turn engine until a screw is opposite the cover aperture. Insert a feeler gauge through hole in outer cover and set adjusting screw so that it has 0·070 in. (1·78 mm) clearance then *firmly tighten the locknut.* Mark the screw with chalk so that if the engine is turned too far the same screw is not adjusted twice, then turn the engine and reset the other two screws. Finally, recheck pedal free-play and replace cover plate.

Adjustment — Laycock Clutch: A certain number of 780 Tractors are fitted with a Laycock clutch and pedal free-play adjustment on these tractors is exactly the same as the pedal adjustment previously described for tractors fitted with a Borg and Beck clutch. The internal adjustment is, however, different and if the power take-off clutch does not fully disengage when pedal is fully depressed the adjusting screws on the three clutch levers should be reset as follows:

1. Check that the clutch housing bolts are fully tightened and the pedal free-play is correct.

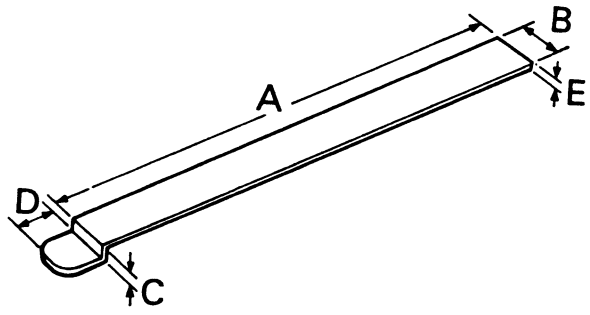

Figure 8. FEELER GAUGE — LAYCOCK CLUTCH

A. 4 in (101·6 mm) B. 3/8 in (9·5 mm)
C. 3/32 in (2·4 mm) D. 3/8 in (9·5 mm)
E. 0·056 in (1·42 mm)

2. Make a feeler gauge to the dimensions shown in Fig. 8 and remove cover plate from right-hand side of the clutch housing.

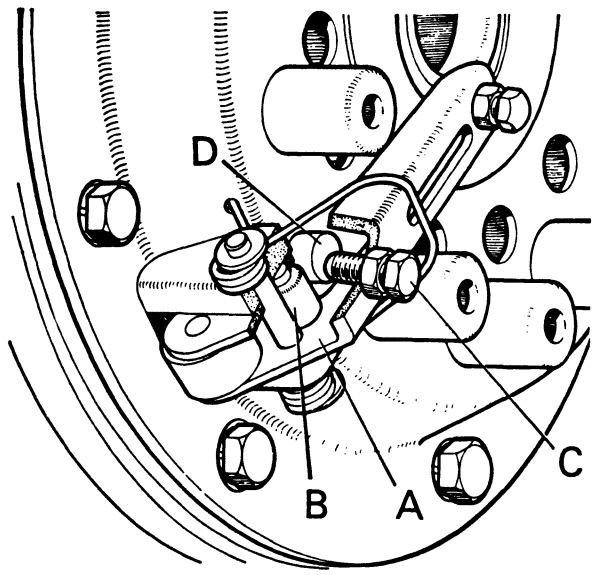

Figure 9.
INTERNAL ADJUSTMENT — LAYCOCK CLUTCH

A. Release lever
B. Roller
C. Adjusting screw
D. Cover thrust button

3. Turn engine until a release lever is opposite cover aperture then insert cranked end of feeler gauge through open heel of lever. (Fig. 9.) Pass end of gauge over roller and pin until it goes under the adjusting screw, then release locknut and, *taking care to note the number of flats the screw is turned,* tighten screw until it just commences to hold the gauge. Firmly tighten locknut, whilst holding screw stationary, and mark lever with chalk, so that it is not adjusted again if engine is turned too far. Reset remaining screws, *not by using the gauge but by turning the screws exactly the same amount as it was necessary to turn the first screw.* This is important as it ensures the plates and facings remain parallel.

Operation — 770 Tractors

As the clutch pedal is fitted directly on the cross shaft, and does not operate the cross shaft via a roller and double-faced lever as on 880 Tractors, the pedal has only two stages of movement. (Fig. 10.)

Depressing the pedal until the pressure plate is drawn rearwards and touches the three inner cover adjusting screws gives the first stage and disengages the transmission drive plate. Depressing pedal fully into the second stage withdraws the inner cover, due to the pressure plate pushing the three adjusting screws, and releases pressure on the separator plate. The three flywheel springs then push separator plate from flywheel and release the power take-off drive plate.

Adjustment — 770 Tractors

As the linings wear during service, pedal free-play will be reduced and this must be restored by adjusting the pedal-stop bolt. Screw the adjusting screw into main frame until pedal has $\frac{1}{2}$ to $\frac{3}{4}$ in. (1·3–2 cm) free-play. When the adjusting screw is fully screwed into main frame a further range of adjustment may be obtained by removing pedal from cross shaft and refitting on the next clockwise serration. This will give pedal a large amount of free-play and allow the adjusting screw to be screwed outwards until the correct amount of free-play is obtained. As the cross shaft will turn, due to action of the shaft return spring, when the pedal is removed, it is advisable to mark the original positions of the shaft and pedal so that the new position can be easily found.

When pedal free-play is being adjusted, after the clutch unit has been serviced, it may be necessary to remove pedal from cross shaft and refit on the next clockwise serration, to allow for the change in pedal position, due to the new plate facings.

If difficulty is experienced in freeing PTO clutch, or if clutch unit has been removed from the flywheel, the three adjusting screws in the inner clutch cover should be adjusted to give 0·070 in. (1·78 mm) clearance between the pressure plate and the end of the screw.

The adjusting screw clearance can be checked by inserting a feeler gauge through the holes in the outer cover. If gearbox top is in position the adjusting screws are accessible when the cover plate is removed from right-hand side of clutch compartment and the engine turned to bring the screws opposite the cover aperture. Ensure that the locknuts are firmly tightened after setting the adjusting screws and finally set pedal free-play.

Servicing Borg and Beck Clutch

The clutch can be dismantled by using the base plate, Service Tool 912917. (See Service Tool Leaflet A4.)

1. To ensure reassembly of the parts in the same relative position, thereby preserving the balance and adjustment of the clutch, mark the following parts:
   a. pressure plate and inner and outer clutch covers.
   b. release levers and pressure plate lugs.
   c. separator plate and flywheel.
2. Remove three adjuster screws and nuts.
3. Screw the long studs into the appropriate holes in the base plate — the studs have a screwdriver slot in the end for this purpose — and fit a cover spacer (912724) on each stud. Place three Code 14 spacers on the base plate, equally spaced and positioned so that the pressure plate will rest on them. Place the clutch assembly on the studs, fit the stud nuts, and tighten down progressively and by diametrical selection.

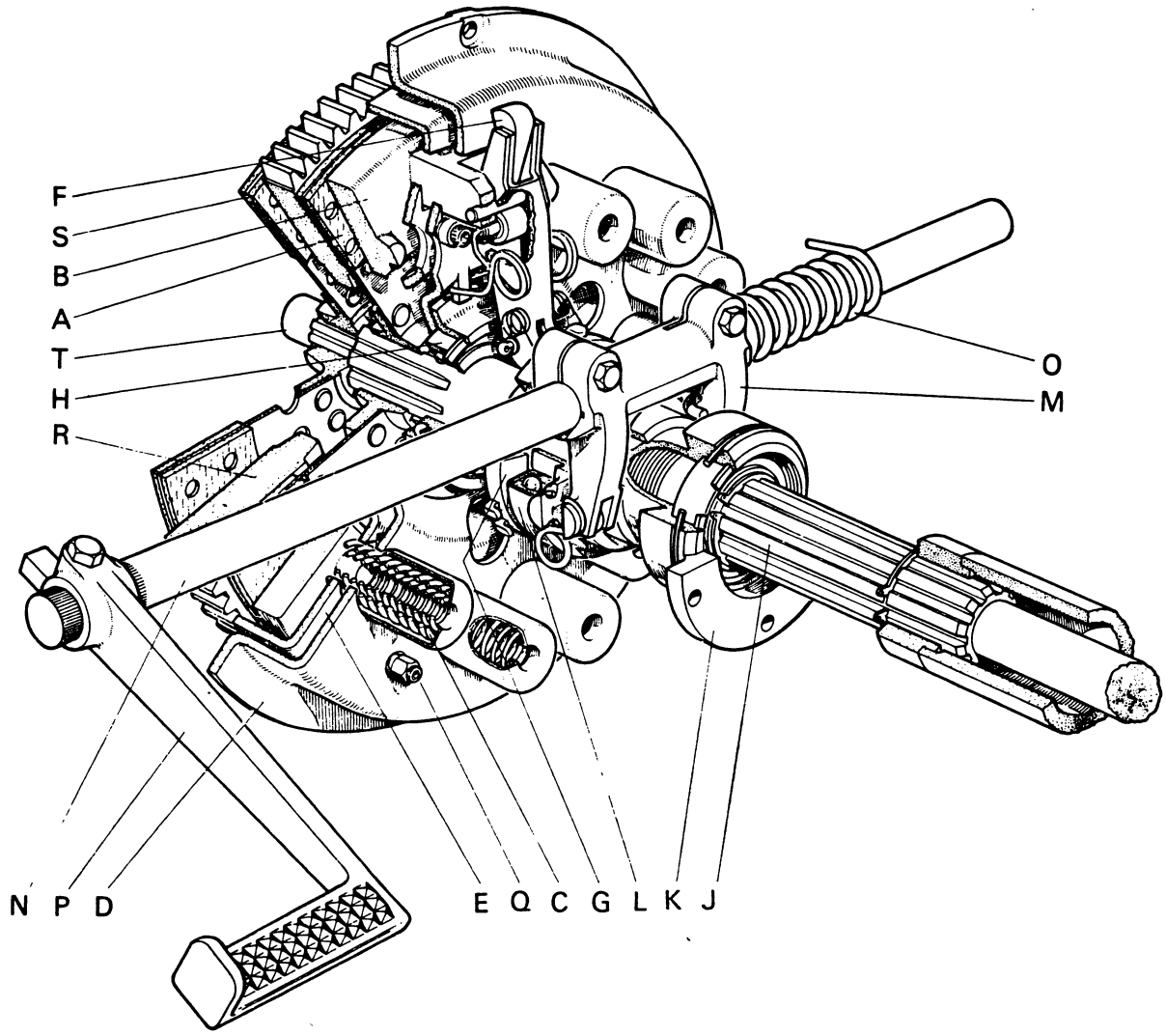

Figure 10 DOUBLE CLUTCH — 770 TRACTOR

A.	Driven plate — transmission	B.	Pressure plate	C.	Thrust springs	D.	Cover — outer
E.	Cover — inner	F.	Release lever	G.	Release lever plate	H.	Bearing
J.	Clutch shaft	K.	Support snout	L.	Release bearing	M.	Release fork
N.	Cross shaft	O.	Return spring	P.	Pedal	Q.	Adjusting screw — cover
R.	Separator plate	S.	Driven plate — PTO	T.	Cardan shaft — PTO		

4. Disengage release lever plate by removing the retaining springs from each release lever.
5. Remove split pins from the release lever fulcrum pins; withdraw the pins and remove release levers after removing the anti-rattle springs.
6. If required, extract the pin securing the roller bearing in each release lever, preparing to catch the 19 needle rollers as each pin is removed.
7. Slowly, and by diametrical selection, unscrew nuts on the long studs securing clutch cover to base plate so that the thrust springs are under control as the cover is released. Separate the various parts of clutch.

Checking the Clutch Parts

Before reassembling the clutch unit all parts should be thoroughly cleaned and then checked over as below.

1. Check release levers for wear. Renew if flats are worn on the tips or fulcrum points. If necessary fit new roller assemblies and lubricate with anti-scuffing paste.
2. Examine the outer cover bearing and renew if tight or dry. When fitting a new bearing ensure that it is a sliding fit in the housing otherwise the bearing will not run freely and may cause clutch spin. If necessary scrape out the housing until the bearing can be pushed freely into position.

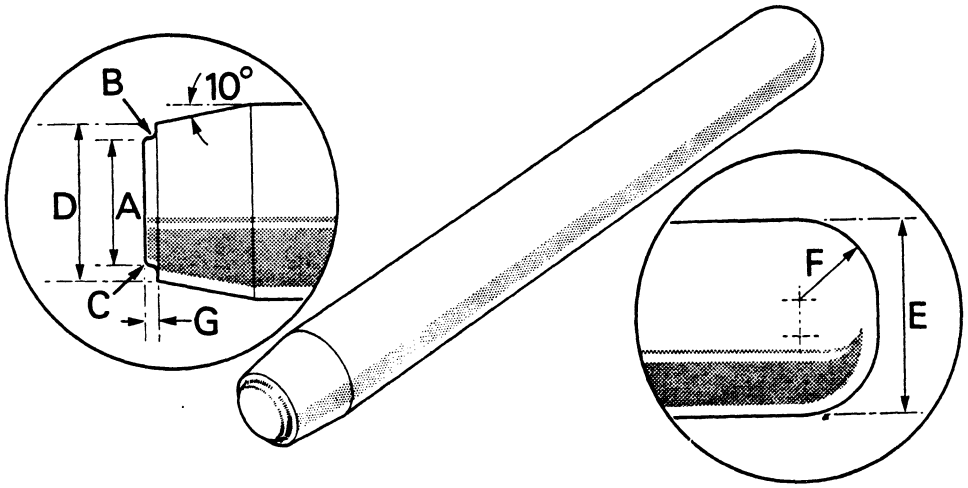

Figure 11. INSERT SWAGING TOOL

A. 0·438 in (11·11 mm)
B. 0·040 in (1·016 mm)
C. 0·025 in (0·635 mm)
D. 0·609 in (15·47 mm)
E. 0·75 in. (19·05 mm)
F. 0·312 in (7·93 mm)
G. 0·065 in (1·65 mm)

3. Check all the clutch springs. Replace if discoloured, rusty or weak. (See Page 50.)

4. Examine pressure plate and replace if badly scored, cracked or blued. Slight scores or cracks may be removed by resurfacing. Maximum amount which can be removed — 0·015 in. (0·38 mm.)

5. Check the condition of the separator plate. If it is only worn on the transmission side, further life may be obtained by reversing it. If badly cracked or blued, it should be replaced as the maximum which can be removed by resurfacing is 0·030 in. (0·75 mm) (total both sides). Also check that the plate is a free sliding fit in the flywheel teeth: a tight plate will cause power take-off clutch spin and a very slack plate may rattle when the pedal is fully depressed. Separator plate rattle is not, however, detrimental to clutch operation.

6. Fit the pressure plate into each cover in turn and check that the clearance between the three lugs and their respective slots is sufficient to give the covers 0·006–0·012 in. (0·15–0·30 mm) total side play on the pressure plate. If not increase the clearance by filing the cover slots. If the cover slots are filed to increase the clearance, also open out the three adjusting screw-holes in the outer cover to $\frac{11}{16}$ in. (17·5 mm) to prevent any possibility of the locknuts fouling the cover and breaking the screws.

7. Examine threaded bushes in inner cover and fit new bushes if the threads are worn or if the bushes are loose. New bushes are available under Part No. 962449, and as these are threaded $\frac{5}{16}$ UNF a set of three must be fitted, with new screws and nuts, if they are replacing $\frac{1}{2}$ UNF nuts used on earlier clutches, otherwise the clutch would be out of balance. It will also be necessary to enlarge the three outer cover holes to $\frac{11}{16}$ in. (17·5 mm) diameter, to allow sufficient clearance for the larger adjusting nuts.

To fit the bushes successfully it is necessary to make a swaging tool to the dimensions shown in Fig. 11. Make the tool from silver steel (good quality tool steel with approximately 1% carbon) and heat treat after machining. Heat to a bright red colour then quench in oil. Polish the spigot end, reheat it to a purple colour and allow to cool naturally in air.

To fit new bushes:

a. Drill out the existing bushes with a $\frac{1}{2}$ in. (12·7 mm) diameter drill.

b. Countersink the holes on outside of cover to $\frac{31}{32}$ in. (15·48 mm) diameter at 90° included angle.

c. Press or drive the new bushes in from inside the cover until the bush shoulder is pressed firmly against inside of cover.

d. Turn cover over and whilst supporting the bush on an anvil use the round end of the tool to flare the hollow end of the bush.

e. Reverse the tool and use the spigot end to firmly swage the bush in position.

f. With a smooth file "dress" the bush flush with the outside of the cover.

The cover and bush must be supported on an anvil during the flaring and swaging

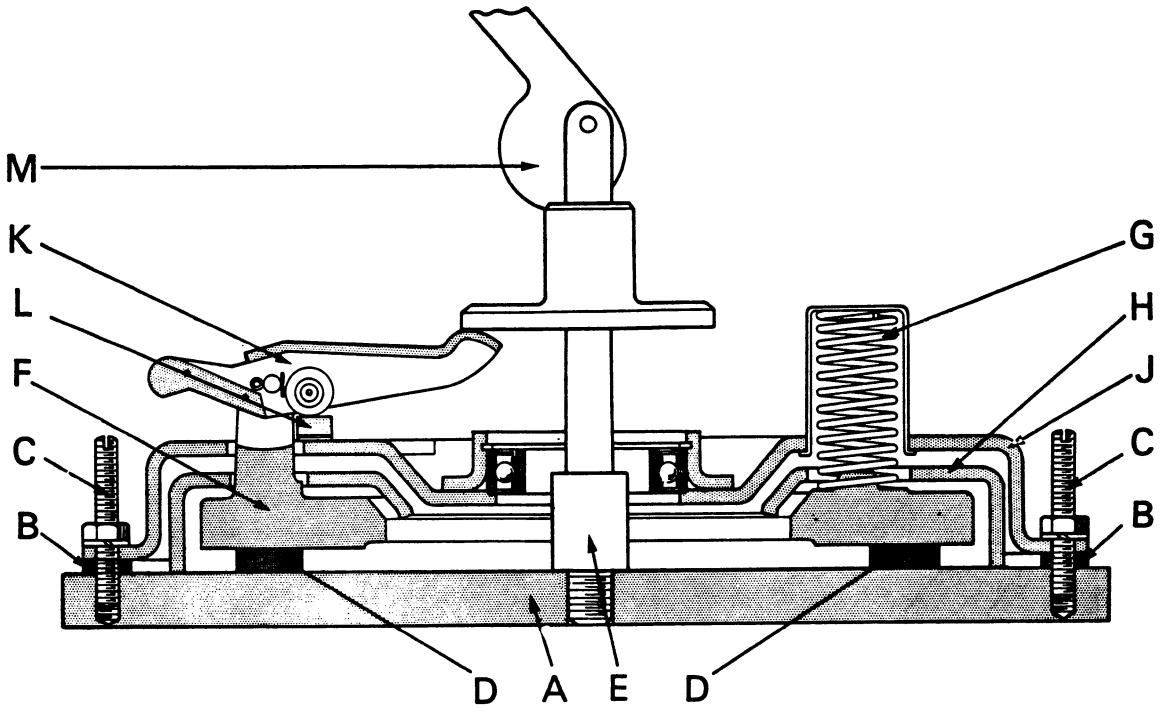

Figure 12. ASSEMBLING A DOUBLE CLUTCH

A.	Baseplate	B.	Spacers — cover	C.	Studs	D.	Spacers — pressure plate
E.	Adaptor — centre pillar	F.	Pressure plate	G.	Thrust spring	H.	Inner cover
J.	Outer cover	K.	Release lever	L.	Adjuster pad	M.	Actuator

operation. If a press is used this must be of at least 5 tons (5080 kg) capacity, and if carried out by hand use a 2 lb (1 kg) copper hammer to avoid damaging the tool.

8. Check the three "push-off" springs in flywheel.
9. Examine the drive plates (see page 24) and check that the plates slide freely on the shaft splines.

Assembling and Setting a Borg and Beck Double Clutch

1 Place the base plate Service Tool 912917 on the bench and clean the face.

2. Screw the long studs into the appropriate holes in the base plate; the screws have a screwdriver slot at one end for this purpose.
3. Screw the pillar adaptor (912723) into the centre of the base plate and place Code 14 spacers on the base plate, equally spaced and positioned so that they are under the release levers. Fit a cover spacer (912724) on each stud, so that when the stud nuts are tightened the spacers will be clamped between the cover flange and base plate.
4. Fit pressure plate on top of the spacers and, after lightly coating the lugs with anti-scuffing paste, fit the inner cover, springs, spring covers and outer cover. Tighten down the cover using the long studs and nuts. Check that all marks made when dismantling are re-aligned and tighten the nuts progressively and by diametrical selection to avoid distorting the cover.
5. Fit release levers.
6. Screw the actuator into the adaptor and depress the handle about twelve times to settle the release mechanism. This is essential, otherwise the release lever setting may change when the clutch is put into operation. It is also important to bear in mind that the purpose of this is to operate the release levers in their normal working position, and the actuator must only be screwed into the adaptor far enough to bring the handle horizontal. If the actuator is screwed fully into the adaptor and the handle operated in an almost vertical position, damage to the actuator may occur.
7. Remove actuator and fit centre pillar in its place. Place the appropriate spacer, Code 8 on a 10/10 in. clutch and Code 16 on a 11/10 in. clutch, on the centre pillar, with the recess downwards, and then fit the single checking finger. (Fig. 13.)
8. Set release levers, by shimming the adjuster pads, to finger height, checking with a set of feeler gauges. A variation of 0·001 in. shim thickness will give a 0·0045 in. variation at the lever tip and the lever tips should be adjusted to within 0·002 in. (0·05 mm) of each other. Operate clutch after changing the shims to settle the parts, and hold the release levers down firmly by hand when checking the height.

Shims for release lever roller pads:

0·002 in. thick	Part No. 900258
0·003 in. thick	Part No. 901723

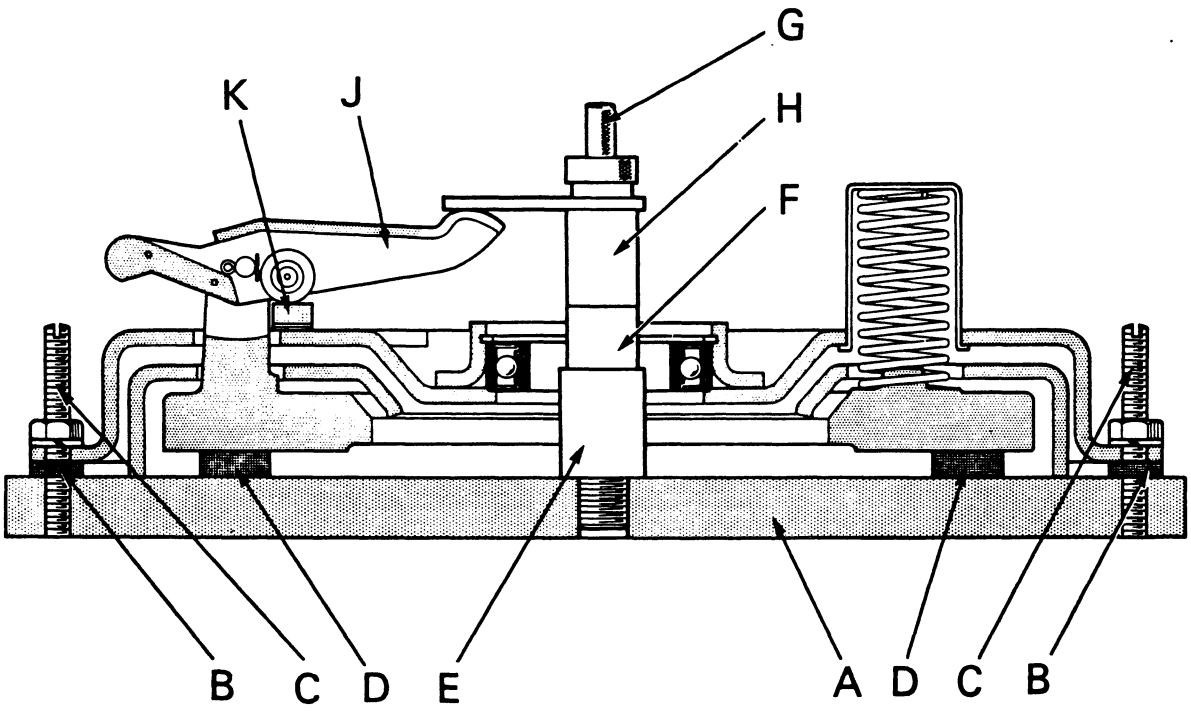

Figure 13. CHECKING RELEASE LEVER HEIGHT — BORG AND BECK

A. Baseplate
B. Spacers — cover
C. Studs
D. Spacers — pressure plate
E. Adaptor — centre pillar
F. Spacer — centre pillar
G. Centre pillar
H. Setting finger
J. Release lever
K. Adjuster pad

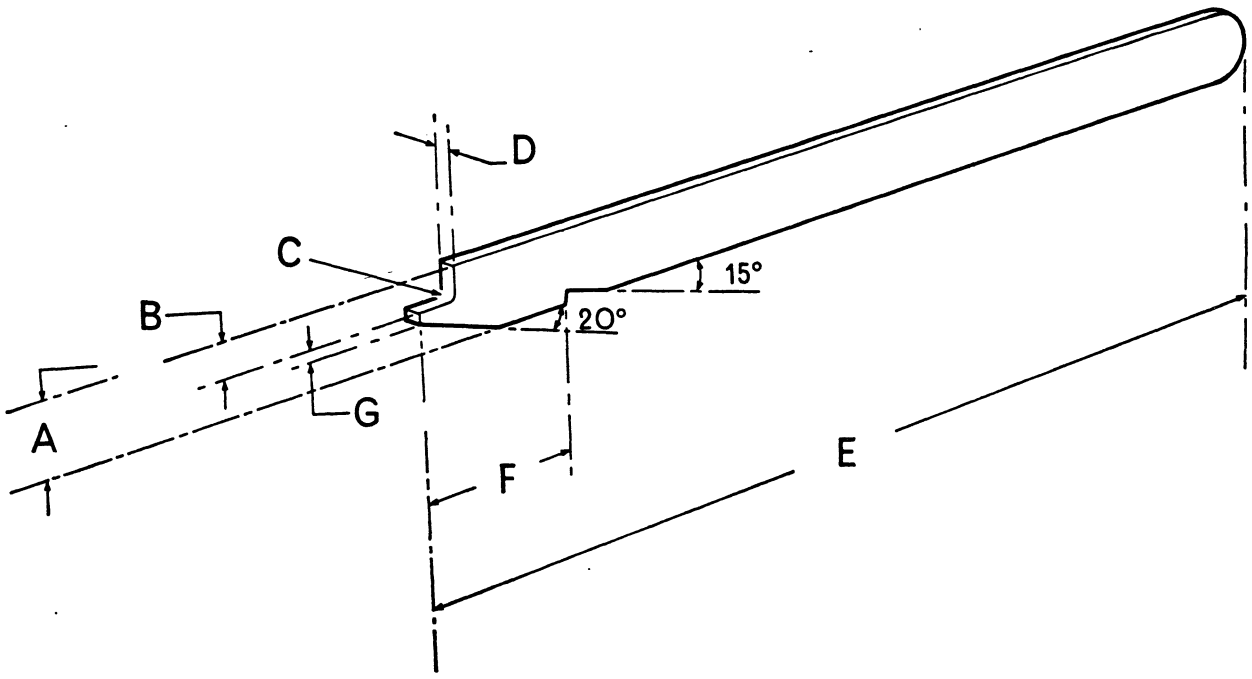

Figure 14. ANTI-RATTLE SPRING REPLACING TOOL

A. $\frac{3}{4}$ in (19·0 mm)
B. $\frac{3}{8}$ in (9·5 mm)
C. $\frac{3}{32}$ in (2·4 mm) radius
D. $\frac{1}{8}$ in (3·2 mm)
E. $11\frac{1}{2}$ in (292 mm)
F. $1\frac{1}{2}$ in (38·1 mm)
G. $\frac{3}{32}$ in (2·4 mm)

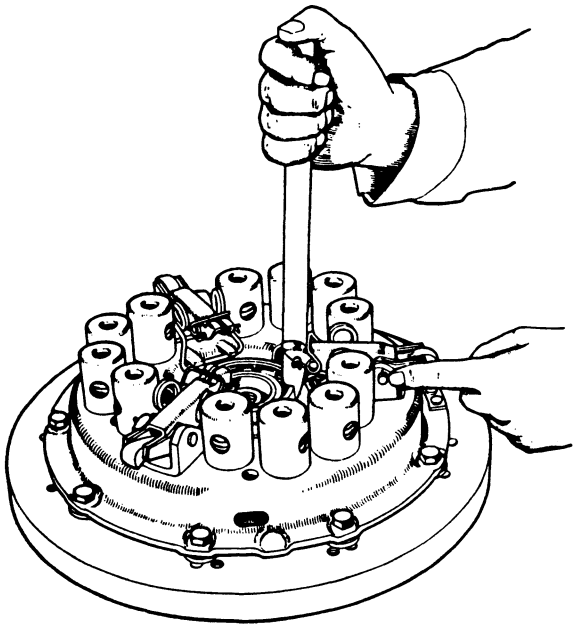

Figure 15. FITTING ANTI-RATTLE SPRINGS

0·010 in. thick	Part No. 904138
0·020 in. thick	Part No. 904193

9. Refit the release lever anti-rattle springs. These are of the double coil type and quite strong. The easiest way of fitting them is to make a simple tool as shown in Fig. 14. If the pins attaching the release levers to the pressure plate lugs are removed, and the springs fitted in position, the tool can be rested against the cover bearing housing and used as a lever to push the release lever outwards, against the spring, until the retaining pin can be refitted.

10. Fit the three adjusting screws and nuts into the inner cover and set them to a clearance of 0·070 in. (1·78 mm). (Note that this clearance will require resetting after the clutch is assembled on the tractor flywheel.) Refit release lever plate, securing with the spring clips.

11. Before removing the clutch from base plate, replace the $\frac{7}{16}$ in. nuts under the release levers, to prevent the thrust springs expanding too far.

Laycock Double Clutch

The Laycock double clutch is fitted to a number of 880 and 780 Tractors and as this clutch does not use the same release bearing and carrier as the Borg and Beck clutch they are not directly interchangeable.

As the clutch pedal is depressed the release levers (Fig. 16) pivot first about the fulcrum rollers and then, when the adjusting screw contacts the cover thrust button, on the outer cover. When release lever is pivoting on fulcrum roller the pressure plate is drawn rearwards to release the transmission plate but the pressure of the thrust springs is transferred to the three plungers, which are pressed against the separator plate and therefore hold the power take-off driven plate firmly in engagement. Pressing the release levers so far that they pivot on the cover thrust button withdraws pressure plate and also releases the three plungers, so that the three springs in flywheel push the separator plate away from flywheel and release the power take-off plate. Both clutches are therefore disengaged when pedal is fully depressed but only the transmission clutch is disengaged if pedal is not depressed past the point where the adjusting screw contacts cover thrust button.

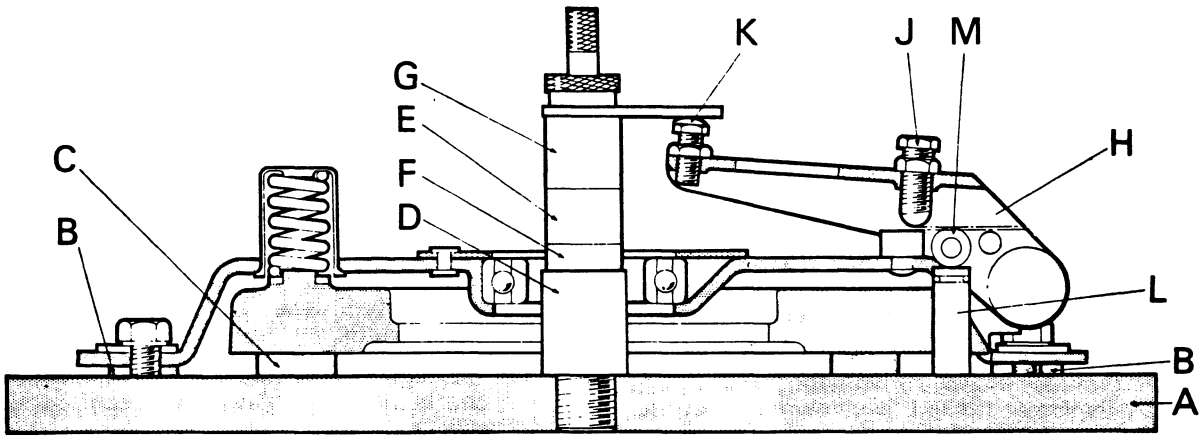

Figure 16. SETTING RELEASE LEVER HEIGHT — LAYCOCK

A. Baseplate	B. Spacer — cover	C. Spacers — pressure plate
D. Adaptor — centre pillar	E. Spacer — 961853	F. Spacer — 962577
G. Setting finger	H. Release lever	J. Adjusting screw — PTO stage
K. Adjusting screw — lever height	L. Plunger — pressure plate	M. Roller — release lever

Servicing the Laycock Double Clutch Unit

The clutch unit can be dismantled by using clutch tool kits 961850 (Kit No. 1) and 961856 (Kit No. 2) which include base plate 912917 (see Service Tool Leaflet A4 or C1). The parts of the tool are identical to those for Borg and Beck clutch except that a centre pillar adaptor 962577 will also be required.

1. To ensure assembly of parts in the same relative position, thereby preserving the balance of the clutch, mark the following parts.
   a. pressure plate and outer cover
   b. release levers and plungers
   c. separator plate and flywheel
2. Screw long studs into appropriate holes in baseplate — the studs have a screwdriver slot for this purpose — and fit a cover spacer 912724 on each stud. Place three code 14 spacers on baseplate, equally spaced and positioned so that the pressure plate will rest on them. Place clutch assembly on studs with release levers opposite the spacers. Fit stud nuts and tighten down progressively by diametrical selection.
3. Slacken off the adjusting screws, remove release lever pivots and spring anchor pins, remove release levers and withdraw roller pins and rollers, and extract plungers.
4. Slowly, and by diametrical selection, unscrew nuts on long studs securing cover to base plate so that thrust springs are under control as cover is released. Separate the various parts of the clutch.

Checking Clutch Parts: Before re-assembling clutch all parts should be thoroughly cleaned and then checked as below.

1. Check release levers for wear. Renew if main pivot pin holes are worn, replace adjusting screws if any flats are worn on fulcrum points. Where new adjusting screws are being fitted check that the spherical end is smooth. If there is a pip on end this should be polished away with emery cloth.
2. Examine release lever rollers and renew if any flats are apparent, fit new roller assemblies and lightly lubricate with anti-scuffing paste.
3. Examine thrust buttons (for the PTO stage). If these are excessively worn the cover should be replaced. It is not recommended that the buttons be changed in service.
4. Examine clutch cover bearing and renew if tight or dry. A new bearing should be a light push fit in cover otherwise clutch may spin because outer track will be deformed. If necessary, scrape the three housing locations until bearing can be pushed freely into position. *It is important that an equal amount is removed from each of the locating faces.* To change the bearing it will be necessary to carefully cut the three rivets, remove retaining plate and punch the rivets out of clutch cover. On re-assembly retaining plate may be secured with three round head $\frac{3}{16}$ in. diameter rivets or alternatively three round head $\frac{3}{16}$ BSF screws and nuts, the heads of the screws should be on outer face of clutch cover and the nuts should be treated with Loctite to ensure that they do not work loose.
5. Check clutch springs, replace if discoloured or rusty. It should be noted that the free length of springs may vary up to $\frac{1}{16}$in. (1·5 mm) and this is no indication of weak springs. It is the loaded length of the spring that is important. (See Page 50.)
6. Examine spring seat insulating washers and replace if damaged or broken.
7. Examine pressure plate and replace if badly scored, cracked or blued. Slight scores or cracks may be removed by re-surfacing. Do not reduce the thickness by more than 0·015 in. (0·38 mm).
8. Fit pressure plate into cover and check that the clearance between the three lugs and their respective slots is sufficient to give cover 0·006 to 0·010 in. (0·15 to 0·25 mm) total side play on the pressure plate. If not, increase the clearance by filing cover slots.
9. Check the condition of separator plate. If it is only worn on the transmission side, further life may be obtained by reversing it. If badly cracked or blued it should be replaced as the maximum which can be removed by re-surfacing is 0·015 in. (0·38 mm) per side.

NOTE: It is inadvisable to re-use clutch springs if any re-surfacing of pressure or separator plate has been carried out. New springs and insulating washers should be fitted to ensure the clutch clamping load is maintained.

Check that separator plate is a sliding fit in flywheel; a tight plate will cause the PTO drive plate to spin and a slack plate may rattle when pedal is fully depressed. Separator plate rattle is not, however, detrimental to the operation of clutch.

10. Check the three push-off springs in flywheel and renew if necessary. These should be of equal length.
11. Examine driven plates (see Page 24) and check that the plates slide freely on shaft splines.

Assembling and Setting Clutch Unit

1. Place baseplate 912917 on bench and clean the face.

2. Screw long studs into appropriate holes in base plate; the screws have a screwdriver slot at one end for this purpose.

3. Screw pillar adaptor (912723) into centre of baseplate and place three Code 14 spacers on baseplate equally spaced and positioned so that pressure plate will rest on them. Fit a cover spacer (912724) on each stud so that when stud nuts are tightened the spacers will be clamped between cover flange and baseplate.

4. Fit pressure plate on top of spacers and lightly coat lugs with anti-scuffing paste. Fit plungers (also lightly coated with anti-scuffing paste), springs and spring insulating washers, spring covers and then the cover. Tighten down cover using long studs and nuts. Check that all identification marks made when dismantling are aligned and tighten nuts progressively and by diametrical selection to avoid distorting cover.

5. Fit release levers.

6. Screw actuator into adaptor and depress handle about twelve times to settle release mechanism. This is essential, otherwise the release lever setting may change when clutch is put into operation. It is also important to bear in mind that the purpose of this is to operate release levers in their normal working position, and actuator must only be screwed into adaptor far enough to bring the handle horizontal. If actuator is screwed fully into adaptor and handle operated in an almost vertical position, damage to actuator may occur.

7. Remove actuator and fit centre pillar in its place. Place the spacer (Code 8) and a Laycock adaptor spacer 962577, on centre pillar with the recess downwards, and then fit setting finger.

8. Set release levers with adjuster screws K, Fig. 16, to finger height. The height of adjuster screws must be alike. Operate clutch again with actuator lever and recheck height. The release levers should be held down firmly by hand so that roller is in contact with plunger.

9. Refit release lever anti-rattle springs. These are of double coil type and can be easily fitted by hand. The tails of spring fit in the two anchor holes in cover, the hoop of spring fits over lever and the two eyes mount on release lever pivot pin.

10. Fit the three adjusting screws and nuts into release levers and set them to a clearance of 0·048 in. (1·22 mm). (*NOTE that this clearance must not be altered after clutch is assembled on tractor flywheel* as due allowance has been made for the use of Borg & Beck equipment when setting the Laycock clutch.)

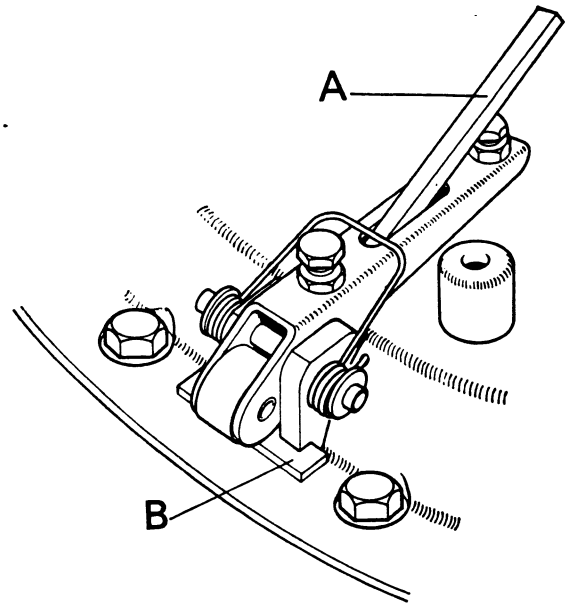

Figure 17.
FITTING TRANSIT BLOCK TO LAYCOCK CLUTCH
A. Lever B. Transit block

11. Before removing clutch from baseplate, replace transit blocks — $\frac{3}{32}$ in.×$\frac{1}{2}$ in.×2 in. (2·38×12·7×50·8 mm) — between cover and pressure plate at the heel of release levers to prevent thrust springs expanding too far as shown in Fig. 17.

Driven Plates: When fitting the driven plates it is essential that the flanged side of plate hub faces towards flywheel. On new Borglite plate the appropriate facing will be stamped "Flywheel this Side" in red.

If for service purposes it is necessary to fit a Borg & Beck transmission drive plate, the clearance of release lever adjusting screws on baseplate must be set to 0·057 in. (1·447 mm) because the Borg & Beck drive plate is thicker than the Laycock plate.

DUAL CLUTCH — 1200 LIVEDRIVE TRACTORS

Operation: The dual clutch fitted in 1200 Livedrive Tractors has two 11 in. (27·9 cm) diameter plates assembled into a single unit but each fitted with its own release mechanism. The transmission clutch is controlled by a foot pedal and the power take-off clutch controlled by a hand lever. Each clutch can therefore be disengaged, or engaged, independently of the other clutch. (Fig. 18.)

The power take-off hand lever is fitted with a catch so that the lever can be locked in the disengaged position for temporarily disengaging drive to power-driven implements. The lever should not, however, remain in the disengaged position for long periods as this would place unnecessary strain on the release mechanism. Always put the power take-off gear lever in neutral and engage the power take-off clutch when not using the power take-off.

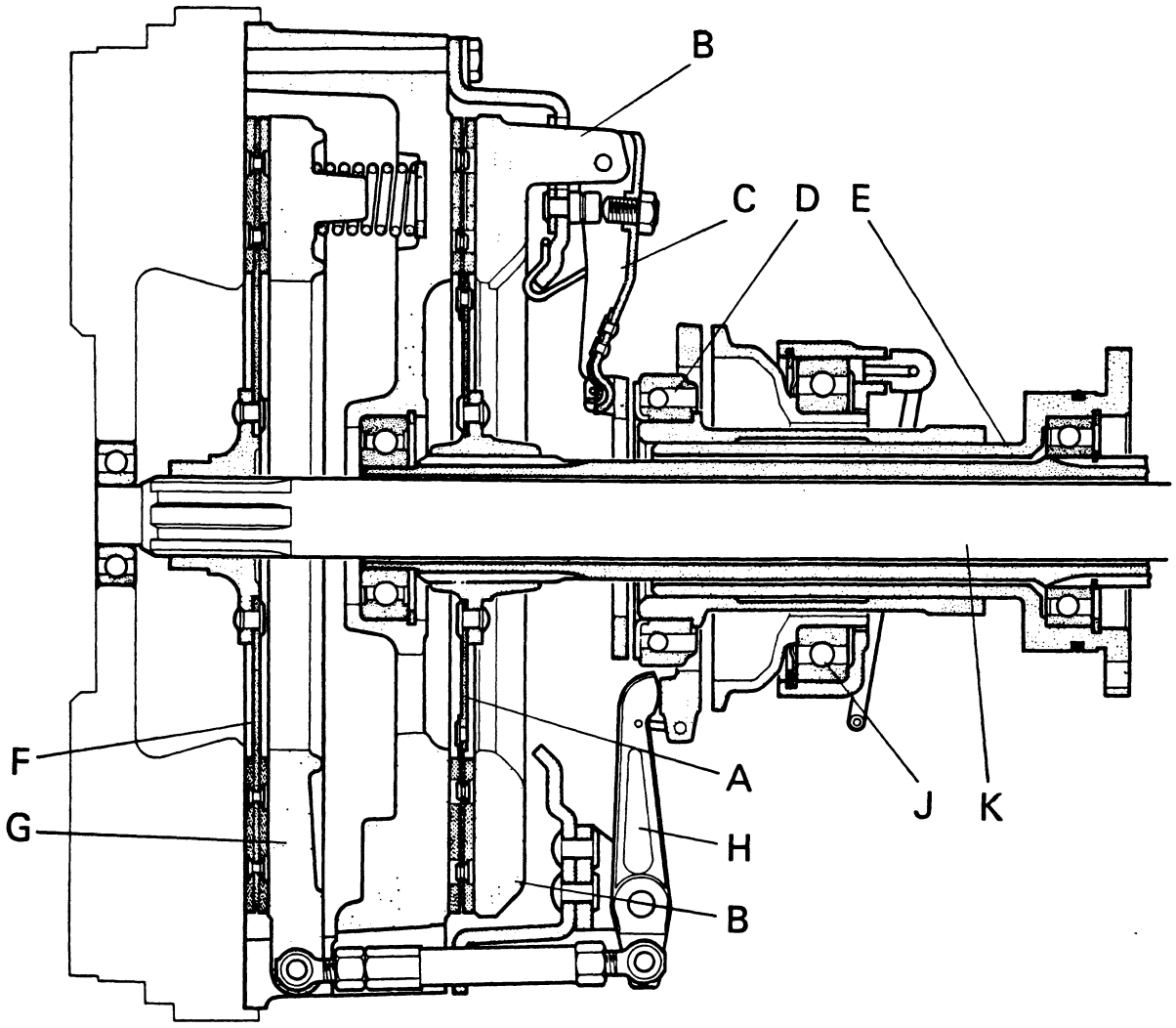

Figure 18. SECTIONAL ARRANGEMENT OF DUAL CLUTCH

A.	Driven plate	Transmission clutch	F.	Driven plate	PTO clutch
B.	Pressure plate		G.	Pressure plate	
C.	Release lever		H.	Release lever	
D.	Release bearing		J.	Release bearing	
E.	Support snout		K.	Driveshaft	

Adjustments: As the clutch facings wear during service the amount of free-play in the operating linkage will be reduced and the maintaining of sufficient free-play is the only adjustment required in the field.

Failure to maintain sufficient free-play in either the transmission or power take-off clutch linkage will cause premature wear of the release mechanism and ultimate clutch failure.

Transmission Clutch Adjustment: If the pedal free-play is less than $\frac{1}{2}$ in. (12 mm) release the locknut and unscrew the adjusting nut, to lengthen the rod, until the free-play is increased to $\frac{3}{4}$–1 in. (1·9–2·5 cm) then tighten the locknut. (Fig. 19.)

Power Take-off Clutch Adjustment: The power take-off lever should have $1\frac{1}{4}$ in. (3·2 cm) free-play when in the forward — engaged – position, and to increase the amount of free-play release the locknut and unscrew the adjusting nut to lengthen the rod then tighten the locknut.

When adjusting the power take-off clutch always check that the hand lever return spring has sufficient tension to hold the rod fully forward when in the engaged position. If necessary renew the pull-off spring, or fit an additional spring, to hold the lever firmly against the front of the slot. *Failure to carry out this check may result in premature wear of the release mechanism.*

Servicing the Clutch Unit

To service the dual clutch unit it is necessary to use either a baseplate kit or a flywheel kit of Service Tools. (See Page 40.)

Figure 19. CLUTCH LINKAGE — 1200 TRACTORS

A. Free play
B. Connecting rod
C. Adjusting nut
} Transmission clutch

D. Adjusting screw — clutch stop

E. Free play
F. Connecting rod
G. Adjusting nut
} PTO clutch

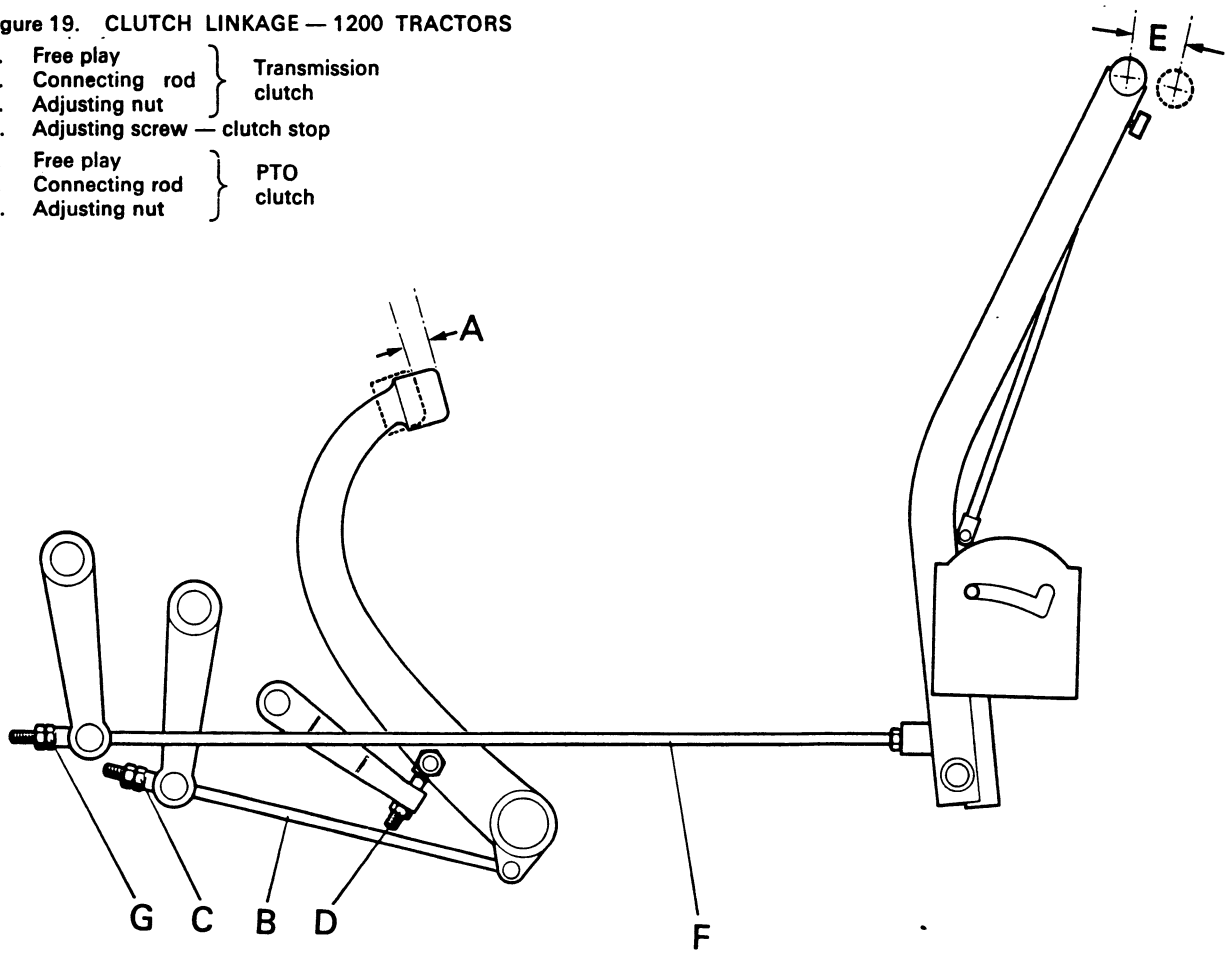

Figure 20.

PLACING DUAL CLUTCH ON BASEPLATE

A. Studs

B. Baseplate

C. Spacer

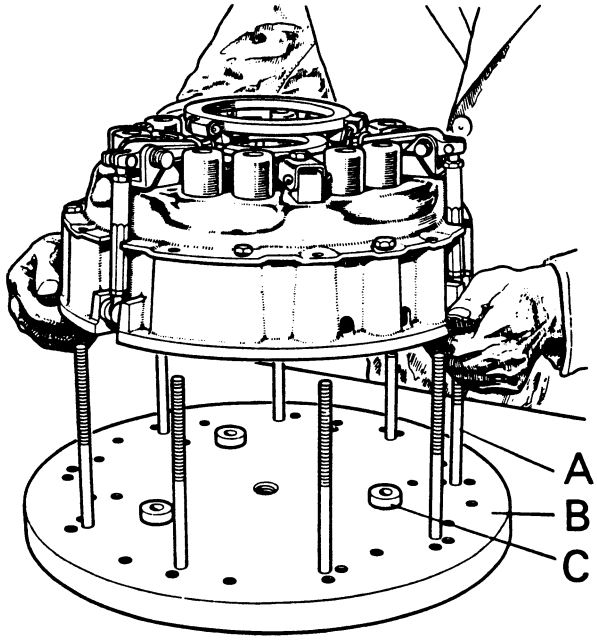

Dismantling the Clutch:

1. Screw the nine special long bolts in the appropriate holes in baseplate, tighten firmly and lightly smear the long threaded portion with anti-scuffing paste.

2. Place three Code 3 spacers, evenly spaced, on the baseplate. Slide clutch assembly on the bolts and position the three spacers so that they are adjacent to the three PTO pressure-plate toggle lugs. (Fig. 20.) Fit a flat washer and nut on each bolt. Tighten the nuts evenly, and by diametrical selection, until clutch and baseplate are clamped firmly together.

3. To maintain balance when re-assembled mark the following components (a felt-tipped pen is ideal for this purpose): PTO and main

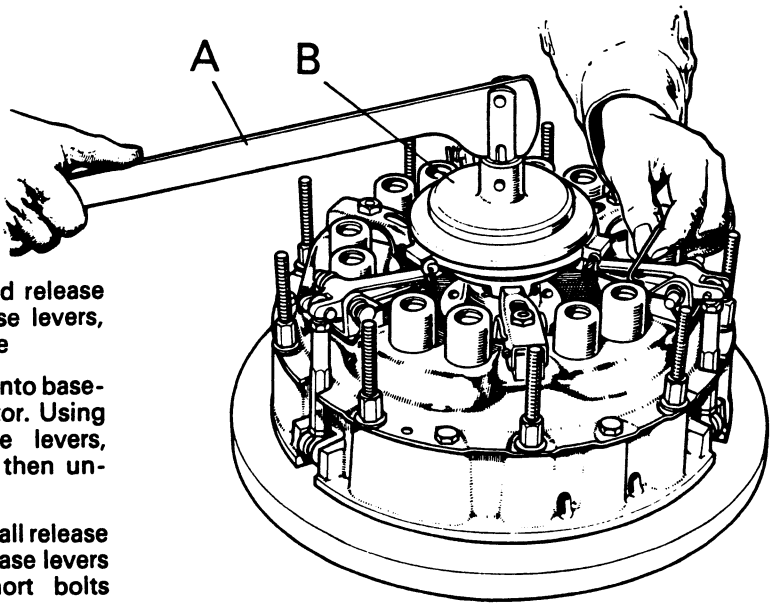

Figure 21.
REMOVING RETAINING STAPLES

A. Actuator
B. Adaptor plate

drive covers, pressure plate lugs and release levers, PTO cover yokes and release levers, main drive cover and pressure plate

4. Screw the long centre pillar adaptor into baseplate and screw actuator into adaptor. Using actuator to depress PTO release levers, remove the three retaining staples then unscrew actuator. (Fig. 21.)
5. Remove clevis pins from the ends of all release levers and remove transmission release levers from cover. Remove the six short bolts attaching cover to main housing.
6. Remove nuts from the nine long bolts. Unscrew nuts evenly, and by diametrical selection, until the thrust springs are fully expanded, then dismantle clutch from baseplate. (Fig. 22.)

Inspection of Parts

Examine all parts after cleaning, paying special attention to the following:

Transmission and PTO Pressure Plates and Separator Housing: The friction surfaces must be smooth and free from blueing or cracks and the pivot points not excessively worn. The friction surfaces may be reground provided that not more than 0·015 in. (0·38 mm) of metal is removed from any one face. Excessive removal of metal will reduce pressure and affect clutch operation.

Separator Housing Bearing: Renew bearing if it is tight, affected by dust, or if the lubricant has dried out.

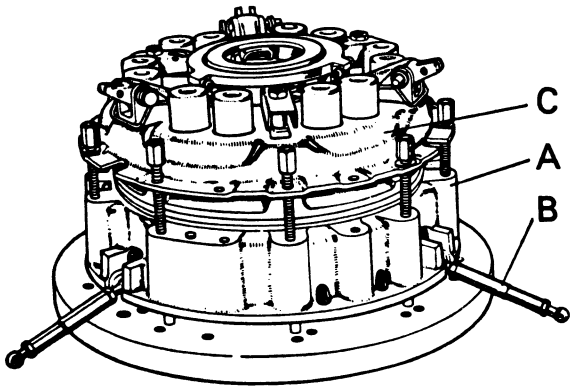

Figure 22. DISMANTLING CLUTCH

A. Separator housing B. PTO toggles
C. Cover assembly

Thrust Springs: Renew springs that are rusted, damaged or weak. As the free length varies, even on new springs, the use of a spring tester is recommended. (See Page 50.)

Spring colour	Transmission Dark blue/ light green	Power Take-off Red
Minimum load	130 lb (58 kg)	131 lb (59 kg)
Checking length	1·69 in. (43 mm)	1·41 in. (36 mm)

Renew springs whose load is below the minimum. Some early clutches were fitted with lavender/black springs on the transmission plate and these should be replaced by a set of dark blue/light green springs.

Insulating Washers: Renew any broken, or damaged, insulating washers. Fix any loose washers in place on the housing with adhesive.

Transmission Cover: Renew if release lever pivots are distorted or loose. Place the pressure plate inside the cover, assembly marks aligned, to ensure plate lugs slide freely through cover holes. File plate lugs if there is insufficient clearance.

Release Levers: Damaged or worn levers should be renewed, together with any bent or worn pivot pins.

Release Lever Springs: Check thickness of transmission release lever springs and if they are 0·104 in. (2·64 mm) diameter replace these with stronger springs, Part No. 923989, which are 0·128 in. (3·25 mm) thick.

Release Lever Adjusting Screws: If hexagonal-headed adjusting screws are fitted in the transmission release levers, replace these with socket-headed screws, Part No. 923990, which are lighter. If lighter screws are not available reduce the

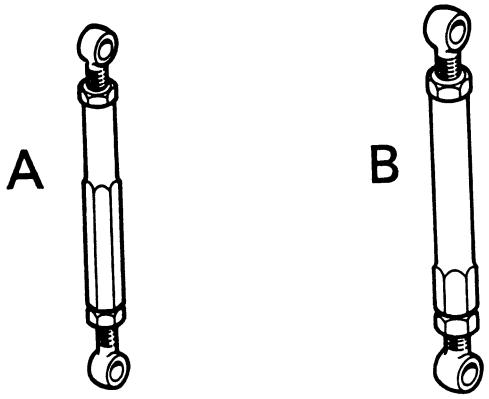

Figure 23. PTO CLUTCH TOGGLE LEVERS

A. Early toggle, $\frac{5}{16}$ UNF threads
B. Later toggle, $\frac{3}{8}$ UNF threads

weight of the original screws, by sawing off the hexagon head and cutting a screwdriver slot in the screw end.

Release Lever Plates: Renew these if they are worn on the surface or lever tip register.

Release Lever Toggles: If the PTO lever toggles are being renewed ensure that the correct toggles are being used. A number of early clutches were fitted with $\frac{5}{16}$ UNF toggles and these must not be replaced by $\frac{3}{8}$ UNF toggles, which are thicker and would not operate freely. (Fig. 23.)

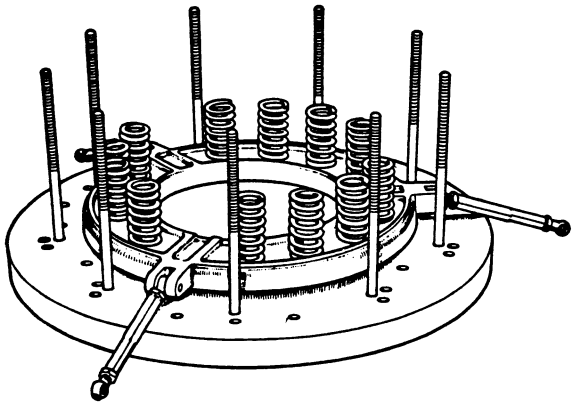

Figure 24. ASSEMBLING PTO PRESSURE PLATE

Assembly and Setting

1. Clean and dry all clutch components, baseplate and spacers. Check that adaptors screw freely into baseplate and lightly lubricate threads.
2. Place Code 3 spacers on baseplate and place PTO pressure plate on spacers; position plate so the spacers are adjacent to plate lugs. (Fig. 24.) Fit red springs on pressure plate and, after smearing plate lugs with anti-scuffing paste, place separator housing in position. Align the assembly marks and ensure that no insulating washers fall out as the housing is inverted. (Fig. 25.)

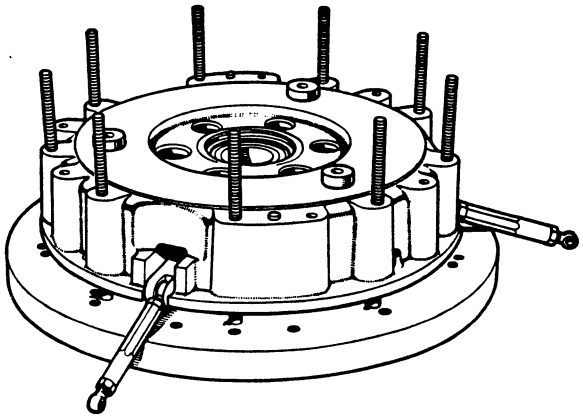

Figure 25. FITTING SEPARATOR HOUSING

An alternative method of assembling PTO pressure plate is to lay separator housing on bench, fit thrust springs and pressure plate in housing then turn assembly over whilst holding housing and plate together and place on baseplate.

3. Place three Code 13 spacers on friction surface of separator housing then fit transmission pressure plate on the spacers. Position pressure plate so that assembly marks are aligned and place the spacers below plate lugs. Temporarily fit cover to ensure pressure plate is centralised on housing.

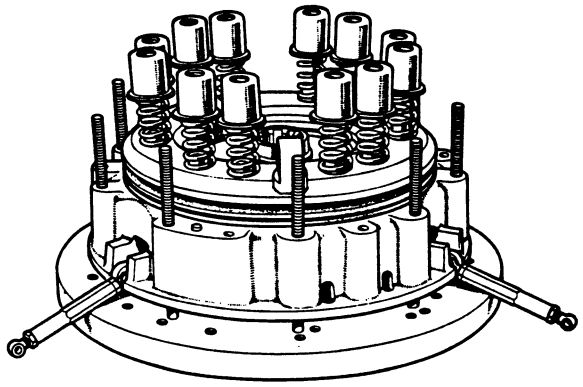

Figure 26. ASSEMBLING TRANSMISSION CLUTCH

4. Fit the dark blue/light green thrust springs on pressure plate and, after lightly smearing the inside of cover apertures with anti-scuffing paste, align assembly marks and place cover over springs, taking care that the cover does not bind on the pressure plate lugs. Screw a nut, *with a flat washer underneath,* on each of the nine long bolts. Tighten nuts evenly and by diametrical selection, until the assembly is clamped firmly against baseplate. Replace and fully tighten the short bolts attaching cover to separator housing. (Fig. 26.)

5. Fit transmission release levers and retaining springs. Smear pivot pins and contact points of release levers with anti-scuffing paste and take care not to overstretch the springs. Secure the pivot pins with split pins. Fit release lever plate and retain in position by fitting split pins: the small leaf spring in end of lever must be pressed in towards lever and the split pin fitted underneath it, so that the plate is held against the lever tips.

6. Fit PTO release lever but do not fit split pins in lever pivot pins. Temporarily fit the release lever plate on ends of lever.

7. Screw the short adaptor into baseplate and screw actuator into adaptor. Do not screw actuator too far into adaptor but screw it in so that when actuator lever is horizontal the release lever plate is depressed $\frac{1}{8}$ in. (3·2 mm). Operate actuator handle rapidly about a dozen times: this is essential to settle the moving parts, otherwise the lever settings will change when the clutch is used.

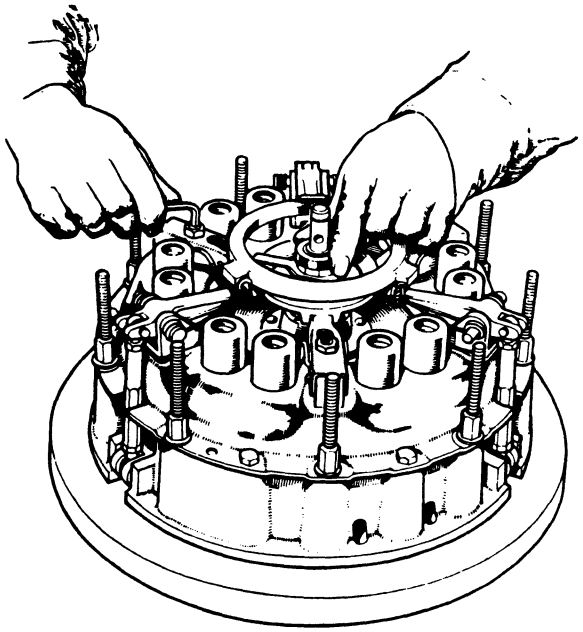

Figure 27.
SETTING TRANSMISSION RELEASE LEVER HEIGHT

8. Remove actuator and screw centre pillar firmly into adaptor. Place a spacer, Code 16X (some early spacers were marked "Code 16" only), on centre pillar — recess in spacer towards adaptor. Fit short setting finger on centre pillar and set adjusting screws on transmission levers so that when finger is rotated, whilst being held firmly and squarely against spacer, it just touches lever plate all the way round. (Fig. 27.) When the levers are correctly set, hold screws stationary and firmly tighten locknuts.

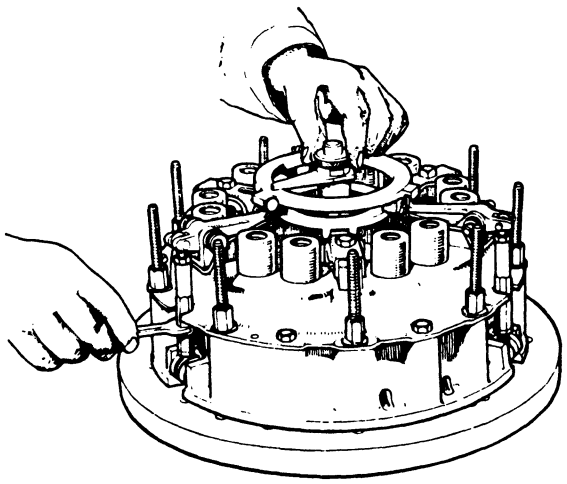

Figure 28. SETTING PTO RELEASE LEVER HEIGHT

9. Remove gauge finger and centre pillar. Screw actuator into adaptor and repeat Operation 7, then refit spacer and gauge finger to recheck lever adjustment. Reset lever screws if necessary, but ensure that locknuts are fully tightened.

10. Remove short adaptor from baseplate and screw long adaptor in its place. Fit circular plate on actuator and screw actuator into adaptor until the release lever plate is pushed down $\frac{1}{8}$ in. (3·2 mm) when the lever is horizontal. Operate actuator rapidly about a dozen times: this is essential to settle the moving parts and ensure the lever setting does not alter when clutch is used.

11. Remove actuator, screw centre pillar into adaptor and fit spacer, Code 16X (some early spacers were marked "Code 16" only), on pillar — recess in spacer towards adaptor. Fit the long setting finger on centre pillar and set the three toggles so that when setting finger is rotated, whilst being held firmly and squarely against spacer, it just touches the lever plate all the way round. (Fig. 28.) When the lever setting is correct, lock toggles by firmly tightening all six locknuts.

12. Remove gauge and centre pillar. Screw actuator, with plate, into adaptor and operate actuator a dozen times, as described in Operation 10, then replace spacer and gauge to recheck lever setting. Reset toggles if necessary, but ensure that all locknuts are fully tightened.

13. Remove PTO release lever plate and withdraw lever pivot pins, so that levers and toggles can be swung outwards clear of clutch. Make three stiff wire staples, similar to the PTO retaining staples but shorter, and hook these over the transmission levers, so that when the cover is removed from separator housing the staples will prevent thrust springs pushing levers away from cover.

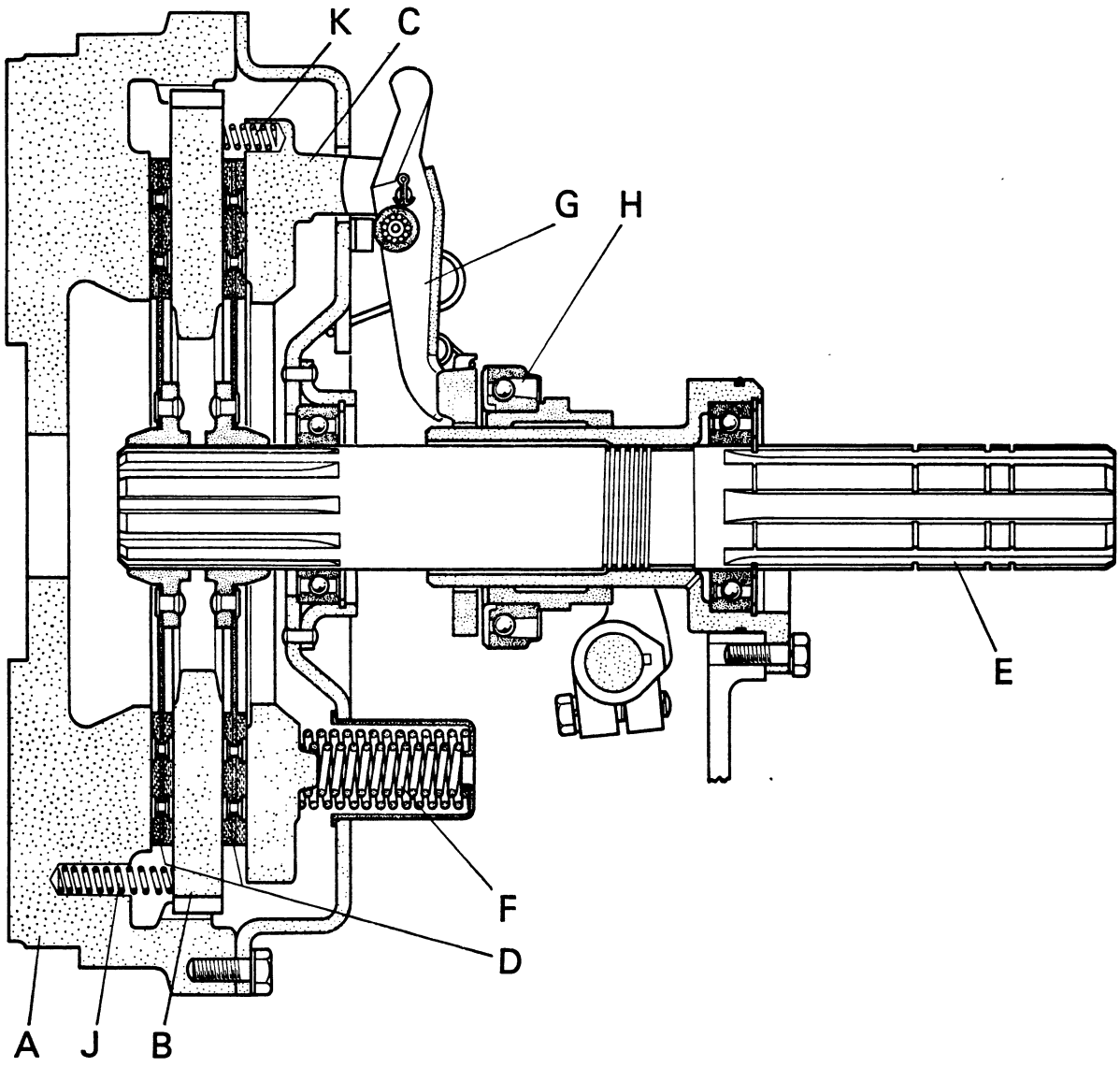

Figure 29. TWIN-PLATE CLUTCH

A. Flywheel
B. Separator plate
C. Pressure plate
D. Driven plates
E. Driveshaft
F. Thrust springs
G. Release lever
H. Release bearing
J. Spring — flywheel
K. Spring — pressure plate

14. Remove short bolts from cover then unscrew nuts from long bolts evenly until spring tension is released. Lift cover from separator housing and remove spacers, centre pillar and adaptor. Place transmission driven plate on separator housing — side marked "Flywheel" towards housing — then refit cover assembly. Use pilot tool (Fig. 44), or a clutch driveshaft, to align driven plate with separator housing bearing and fit three nuts, *with flat washers underneath*, spaced evenly round the housing. Tighten the three nuts evenly to clamp cover down, then replace and firmly tighten the six short cover bolts.

15. Remove staples from transmission levers, refit PTO release levers and release plate. Fit retaining staples on PTO levers, check that all split pins are securely locked, then remove the three nuts and lift from baseplate.

TWIN-PLATE CLUTCH

The twin-plate clutch is an optional fitting on 880 and 990 Non-Livedrive Tractors and is of similar construction to the Livedrive clutch but has both inner and outer driven plates mounted on the same driveshaft. The clutch therefore functions as a single clutch but the twin plates give it twice the facing area of a single plate unit.

Adjustment: Clutch pedal adjustment is by means of the adjusting screw on the cross shaft operating lever (Fig. 6) and this should be set to

give 1 to 1½ in. (2·5 to 3·8 cm) free-play. As no intermediate stage is required, the pedal roller has no eccentric adjustment and the cross shaft lever is not equipped with two angled faces. The maintaining of sufficient free-play is the only adjustment normally required during service.

On early clutches there are three adjusting screws on the inner cover — the screws used for PTO clutch adjustment on the Livedrive clutch and shown in Fig. 6 — and if the driven plates fail to stop when the pedal is fully depressed, this may be caused by excessive clearance between the screws and pressure plate. To set the adjusting screws, remove vent cover from clutch housing and turn engine so that one of the screws is opposite cover aperture. Release locknut, insert a 0·050 in. (1·27 mm) feeler gauge through hole in clutch cover and between screw end and pressure plate. After adjusting screw so that it just holds feeler gauge, hold screw stationary and firmly tighten locknut. Turn engine and adjust the two remaining screws in the same manner. Ensure that the locknuts are fully tightened before replacing cover.

Servicing the Twin-Plate Clutch

1. To ensure re-assembly of parts in the same relative position, mark the pressure plate, release levers and covers (a felt-tipped pen is ideal for this purpose).

2. Screw long studs into appropriate holes in clutch tool baseplate, using screwdriver slots in studs. Fit a cover spacer (912724) on each stud and place three spacers, Code 17X, on baseplate — equally spaced and positioned so that the pressure plate will rest on them. Slide clutch assembly on studs. Fit nuts on studs and tighten down evenly, and by diametrical selection, until the clutch is clamped firmly against baseplate.

3. Remove release lever thrust plate and if clutch is fitted with an inner cover, remove the three inner cover adjusting screws.

4. Remove split pins from release lever fulcrum pins. Withdraw pins and remove anti-rattle springs and release levers.

5. If required, extract pin securing roller bearing in each release lever, preparing to catch the 19 needle rollers as each pin is removed.

6. Evenly, and by diametrical selection, unscrew nuts from the long studs until thrust springs are released then remove cover and separate the various parts.

Checking the Clutch Parts

Examine all parts after cleaning, paying special attention to the following:

Release Levers: Renew if flats are worn on tips of fulcrum points. If necessary, fit new roller assemblies and lubricate with anti-scuffing paste.

Cover Bearing: Renew if bearing is tight or dry. When fitting a new bearing ensure that it is a sliding fit in housing. If necessary scrape out the housing until bearing can be pushed freely into position.

Thrust Springs: Renew any springs that are weak, damaged or rusty. As the free-length varies, even on new springs, the use of a spring tester is recommended. (Page 50.)

Pressure Plate: If surface is cracked, blued or badly scored renew. If slightly scored the surface may be refaced provided that not more than 0·015 in. (0·38 mm) of metal is removed.

If a new pressure plate is fitted it is recommended that the latest type plate (962573) and three springs (625232) are fitted. The clutch can then be converted to the latest type unit by discarding the inner cover and fitting two new driven plates (928288). (Fig. 29.)

Separator Plate: If plate is cracked, blued or badly scored it should be renewed. If slightly scored the surfaces may be reground if thickness of plate is not reduced by more than 0·030 in. (0·75 mm). Also check that plate is a free sliding fit in the flywheel teeth: a tight plate will cause clutch drag and a very slack plate may rattle when the pedal is fully depressed, although separator plate rattle is not detrimental to clutch operation.

Covers: Fit pressure plate into cover and check that release lever lugs have sufficient clearance to allow 0·006 to 0·012 in. (0·15 to 0·30 mm) movement of cover; if not, file cover slots, where required, to increase clearance. On early clutches with an inner cover also check that the adjusting screw inserts are in good condition; renew these if necessary (see Page 10).

Separator Plate Springs: Clean out the three holes in flywheel and check springs. Clutches without inner cover also have three compression springs in pressure plate and it is important that these operate freely, otherwise clutch will spin when disengaged.

Driven Plates: Examine drive plates (see Page 24) and check that plates slide freely on shaft splines.

Assembling and Setting a Twin-Plate Clutch

1. Place baseplate (Service Tool 961696) on bench and clean face. Screw long studs into appropriate holes in baseplate, using screwdriver slot in stud ends. Screw adaptor (912723) into centre of baseplate and place a cover spacer (912724) on each stud.

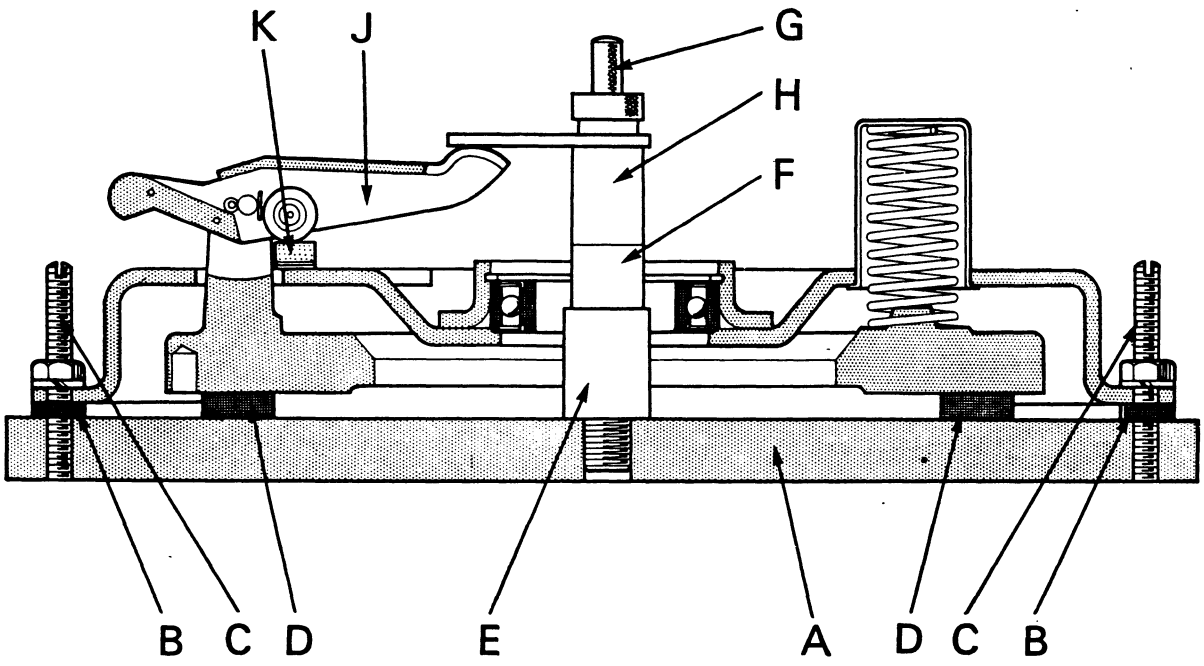

Figure 30. SETTING RELEASE LEVER HEIGHT

A. Baseplate
B. Spacer — cover
C. Studs
D. Spacer — pressure plate
E. Adaptor — centre pillar
F. Spacer — centre pillar
G. Centre pillar
H. Setting finger
J. Release lever
K. Adjuster pad

2. Position three spacers, Code 17X, on baseplate and fit pressure plate on top of spacers: ensure that spacers are equally spaced under pressure plate and plate is central with studs.

3. Lightly smear pressure plate lugs with anti-scuffing paste and place thrust springs in position. If the clutch incorporates an inner cover, replace this and the six light springs. Replace outer cover and fit a nut on each baseplate stud. Check that assembly marks are aligned then tighten nuts down, evenly and by diametrical selection, until cover is firmly clamped against spacers on stud.

4. Replace release levers, but not lever plates, and screw actuator into adaptor. Do not screw actuator too far into adaptor: screw it in so that when actuator lever is horizontal the release lever tips are depressed $\frac{1}{8}$ in. (3·2 mm). Operate actuator rapidly about a dozen times to settle working parts. This is essential otherwise release lever setting may change when clutch is put into operation.

5. Remove actuator and screw centre pillar into adaptor. Place the appropriate spacer, Code 8 if early 10/10 clutch but Code 16X if a 10/10 clutch without inner cover, or an 11/10 in. clutch, on the centre pillar — recess in spacer downwards — then fit checking finger. Set release levers, by shimming adjuster pads, so that lever tips are within 0·002 in. (0·05 mm) of gauge finger. Hold levers down firmly by hand when checking height setting and use a feeler gauge to measure the clearance between lever and gauge finger: a 0·001 in. variation in shim thickness gives 0·0045 in. variation at lever tip. (Fig. 30.)
Shims for release lever roller pads:

0·002 in. thick	Part No. 900258
0·003 in. thick	Part No. 901723
0·010 in. thick	Part No. 904138
0·020 in. thick	Part No. 904193

6. Remove gauge, spacer and centre pillar. Screw actuator into adaptor, as in Operation 4, and operate actuator rapidly a dozen times. Remove actuator, refit centre pillar, spacer and gauge finger, then recheck that all release levers are correctly set. Re-adjust if necessary, ensuring that adjuster pad screws are firmly tightened.

7. Fit anti-rattle springs on release levers: these are quite strong and the easiest way of fitting them is to make a simple lever as shown in Fig. 14. If the pins attaching release levers to pressure plate lugs are removed and springs fitted in position, the lever can be rested against cover bearing housing and used to push release lever outward against spring until retaining pin can be fitted. (Fig. 15.)

8. If clutch incorporates an inner cover, replace the three adjusting screws and locknuts. Insert feeler gauge through cover holes and set screws so that they are 0·050 in. (1·270 mm) clear of pressure plate then firmly tighten locknuts. Note that these screws will require resetting when clutch is assembled in tractor.

9. Smear release lever tips with anti-scuffing paste then replace lever thrust plate and secure with spring clips. Fit a $\frac{7}{16}$ in. nut under outer end of each release lever, to prevent thrust springs expanding too far, then unscrew the stud nuts evenly and remove clutch from baseplate.

Refacing Driven Plates

To remove the old facings drill out the rivets using a $\frac{5}{32}$ in. (4 mm) diameter drill inserted through the clearance hole in the opposite side facing.

The open portion of the rivet readily centres the drill enabling a speedy and clear removal to be effected.

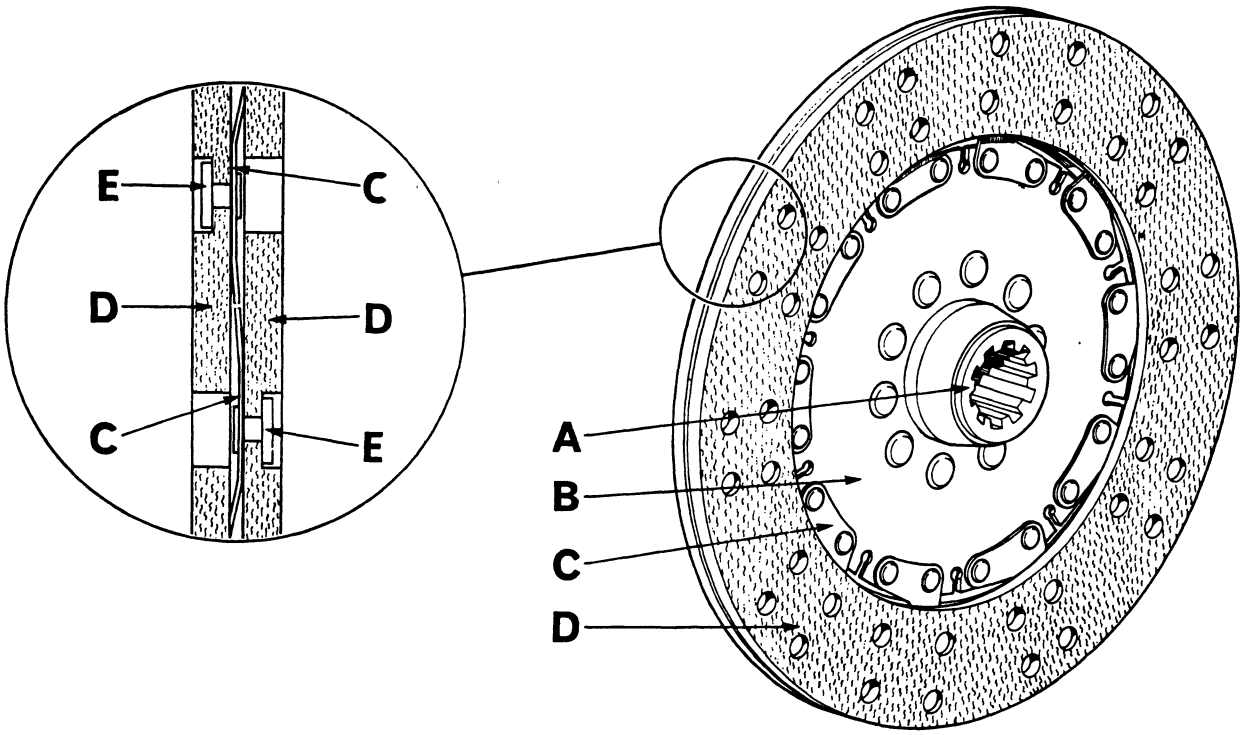

Figure 31. BORGLITE DRIVEN PLATE

A. Hub B. Disc C. Segment D. Facing E. Rivet

Driven Plates

An examination of the various driven plates will show that they are of either the rigid or the Borglite type. The Borglite type consists of a series of segments, set alternately concave and convex, riveted to a centre plate which is itself riveted to a splined hub. The facings are riveted to the segments, each rivet being attached to only one facing. The alternate hole in each facing is drilled to give access to the rivet securing the facing on the opposite side of the plate. It is important that the side of the plate marked "Flywheel" should always be fitted towards the flywheel.

The rigid type plate is a one-piece steel disc which is cut to form segments. The disc is riveted to a centre hub and the facings are connected to alternate segments, as described above for the Borglite plate.

As rigid plates have 24 facing rivets and Borglite plates have 40 facing rivets, facings are not interchangeable, but facings are available to suit either type of plate.

When the facings have been removed examine the plate carefully. If any signs of cracking are apparent, or if the hub is loose on the rivets or worn in the splines, a new plate complete with facings is required. Also check the plate for distortion and discard it if more than 0·015 in. (0·38 mm) out of true when spun on a mandrel between centres.

Place one of the new facings in position on the disc, noting that the convex side of the plate segments are against the rivet holes in the facing.

Insert hollow steel rivets with their heads against the metal disc segment and roll rivet shank securely against the facing counterbore: this is the opposite procedure to that used with brass rivets. If a rolling tool is not available a blunt-ended punch will prove satisfactory.

Insert brass rivets, with their heads in counterbored holes in facing, and roll the shanks securely against plate disc. If a rolling tool is not available a blunt-ended punch will prove satisfactory.

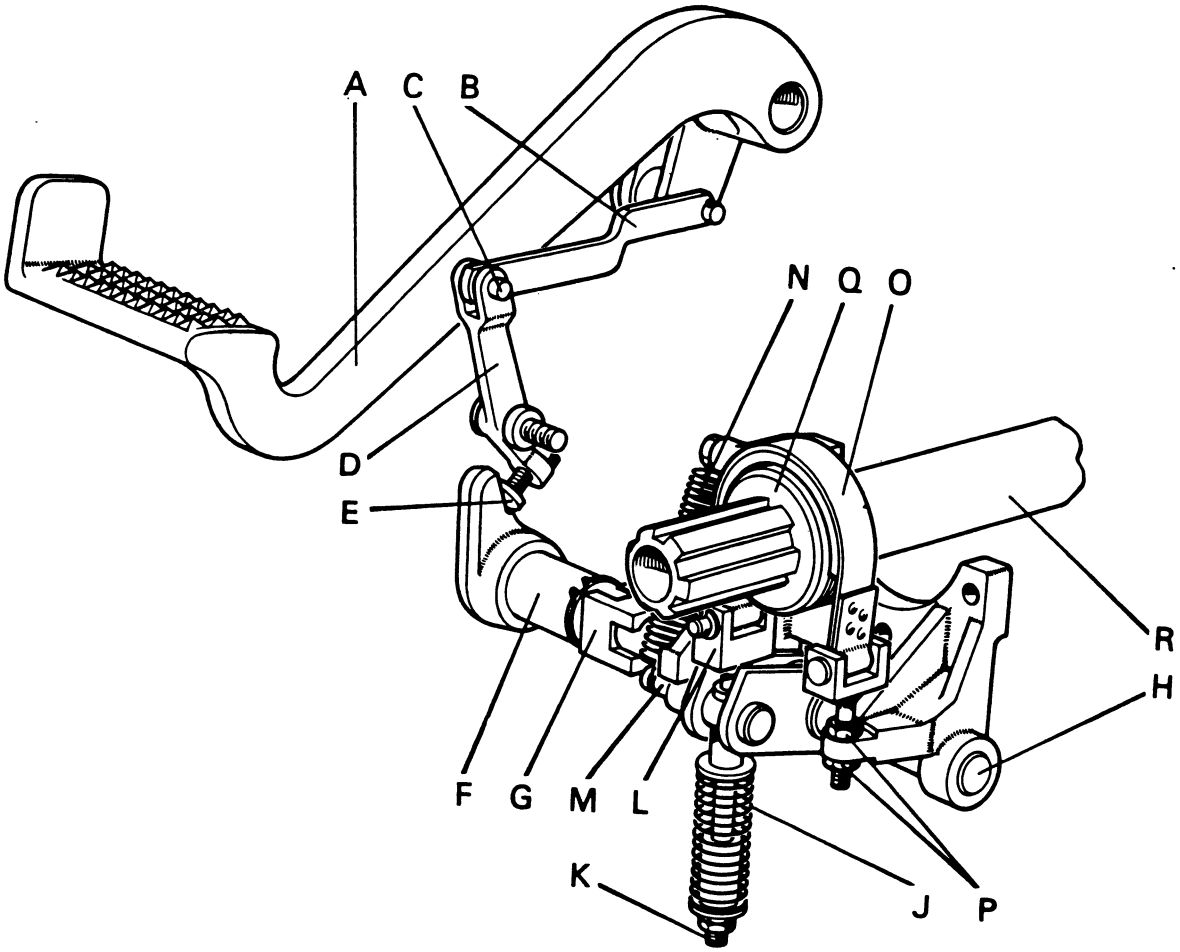

Figure 32. CLUTCH STOP — 990/880/780 LIVEDRIVE TRACTORS

A.	Clutch pedal	B.	Connecting link	C.	Clevis pin	D.	Lever
E.	Adjusting screw	F.	Operating lever	G.	Coupling	H.	Shaft
J.	Compression spring	K.	Stud	L.	Fork	M.	Anchor pin
N.	Tension spring	O.	Brake band	P.	Locknuts	Q.	Drum
		R.	Clutch driveshaft				

Secure the opposite side facing in a similar manner, when it will be noted that counter-bored holes in one facing coincide with clearance holes in the other facing.

Clutch Stop

With the exception of 770 Tractors, all Livedrive models are fitted with a small brake band which operates on a drum on clutch driveshaft. When clutch pedal is depressed to disengage transmission clutch the band is tightened round the drum and stops shaft revolving, thus allowing gears to be engaged without noise or damage.

All Non-Livedrive Tractors and 770 Livedrive models have a spring-loaded friction pad attached to inside of gearbox cover. The pad is in permanent contact with the muff coupling and when clutch is disengaged the slight drag of the pad brings clutch driveshaft to a standstill. There is no adjustment or setting required and the only maintenance necessary is examination of pad whenever gearbox top is removed.

Adjustment: The only external adjustment available is by means of the operating lever adjusting screw and this should be set so that when pedal is depressed sufficiently to take up all the free-play and operating lever is turned clockwise until brake-band touches drum — this only requires light hand pressure — head of adjusting screw is $\frac{1}{16}$ in. (1·6 mm) clear of operating lever or, on 1200 Tractors, pedal pin.

Examination: This should be carried out whenever gearbox cover is removed. Examine brake band lining and renew if more than half worn. New linings are $\frac{1}{8}$ in. (3·2 mm) thick and are bonded to the band. New linings should be soaked in oil before fitting.

Internal Setting (except 1200): Disconnect pedal linkage by removing clevis pin C (Fig. 32) from connecting link and check that long stud K is nearly flush with internal face of large fork-end L.

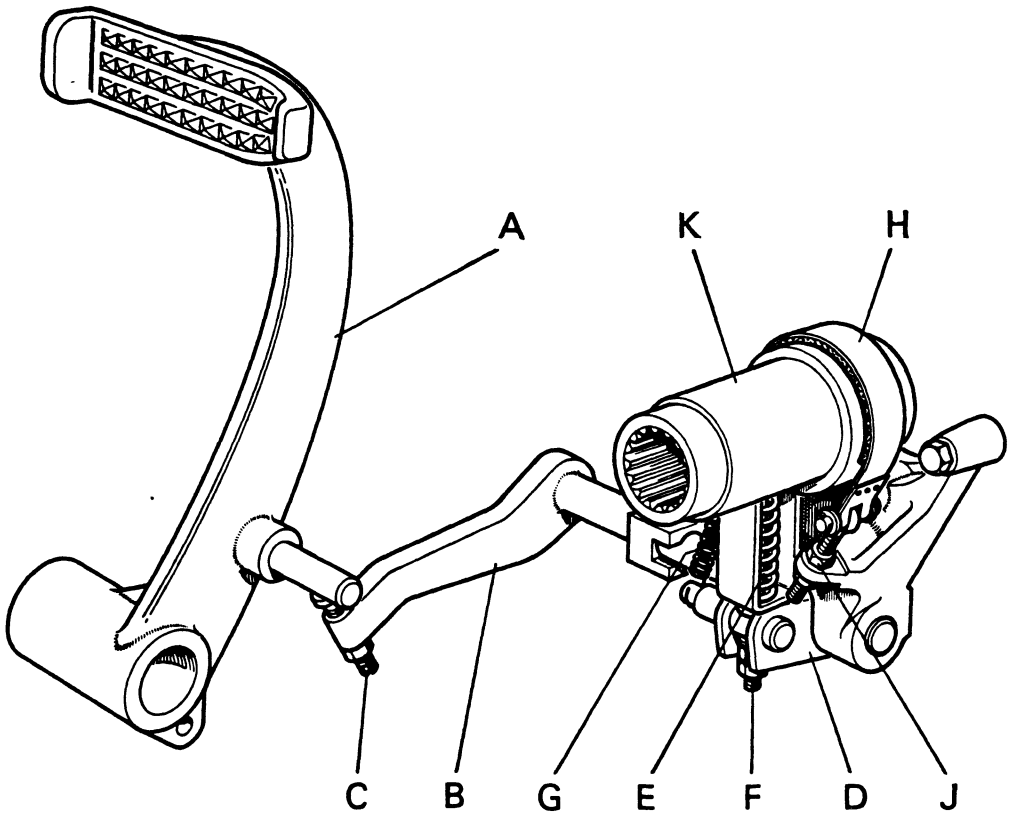

Figure 33. CLUTCH STOP — 1200 LIVEDRIVE TRACTORS

A. Clutch pedal B. Operating lever C. Adjusting screw D. Fork
F. Stud G. Return spring H. Brake band J. Adjusting nuts
K. Muff coupling

Adjust nuts at lower end of stud K so that spring J is compressed to a length of $2\frac{21}{32}$ in. (67·4 mm). Push anchor pin down and insert a 0·070 in. (1·78 mm) feeler gauge between pin and stop. Release anchor so that it holds feeler gauge then set locknuts P so that band is only just clear of drum. Withdraw feeler gauge, refit clevis pin and set lever adjusting screw E so that it is $\frac{1}{16}$ in. (1·6 mm) clear of operating lever when pedal is depressed to take up the free-play, and lever F is turned lightly clockwise until brake-band touches drum.

Internal Setting (1200 Tractors): Check the length of the compression spring E. (Fig. 33). This should be compressed to a length of $2\frac{3}{8}$ in. (60·3 mm) and is set by means of the adjusting nuts on stud F. Screw adjusting screw C fully into the operating lever B and release pedal so that it is in the fully engaged position. With clutch stop mechanism held in the "off" position by return spring G, tighten nuts J until clearance between band and drum is just eliminated — take care not to overtighten nuts — then unscrew nuts two full turns and lock firmly. This will give correct clearance between band and drum. Finally set adjusting screw C so that when pedal is depressed to take up free-play and operating lever B is pressed lightly down, so that band is touching drum, screw head is $\frac{1}{16}$ in. (1·6 mm) clear of pedal pin.

Before refitting gearbox cover, check that the lubricating oil pipe is positioned so that it directs oil on to clutch-stop drum: the brake lining will wear rapidly if not lubricated.

Overload Release Withdrawal Mechanism (Hand Clutch)

Models 880 and 990 Tractors can be fitted with a clutch withdrawal mechanism which is operated by an overload release cable from the top link. The resetting lever (hand clutch lever) is mounted on the left-hand side of the rear axle casing and is normally retained in the rear (engaged) position by the catch engaging with the stud. (Fig. 34.)

When the catch lever is raised by the overload release cable, or tripped by hand, the catch releases the lever and allows the tension spring to draw the lever forward, thus disengaging the clutch.

On Livedrive tractors the hand clutch disengages the main drive clutch only, the power take-off and belt pulley remaining operative until disengaged by the clutch pedal.

Adjustment of the Hand Clutch

Resetting of the clutch pedal free-play by means of the adjustment bolt also resets the free-play in the hand clutch linkage. The setting of the hand clutch rod adjusting nut should, however, always be checked when the clutch is adjusted to ensure that the hand clutch linkage does not prevent the clutch

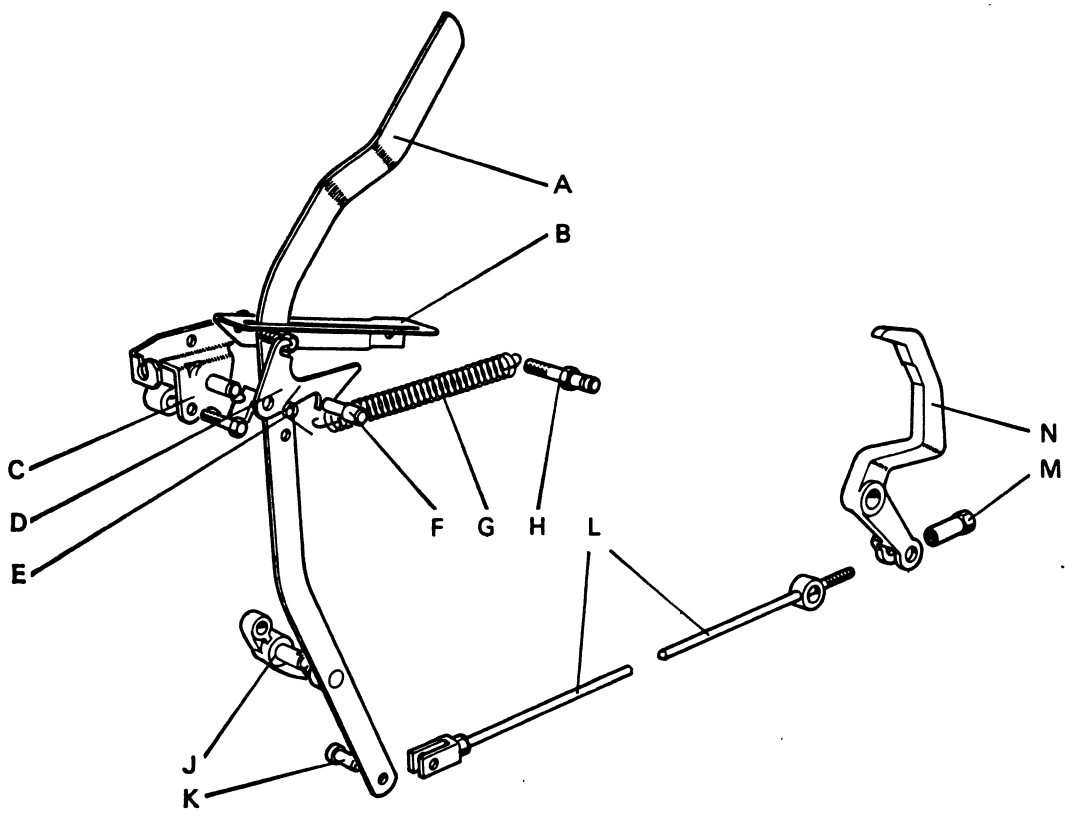

Figure 34. HAND CLUTCH LINKAGE

A. Hand lever B. Guide bracket C. Support bracket D. Trigger
E. Torsion spring F. Locking pin G. Tension spring H. Anchor stud
J. Pivot bracket K. Clevis pin L. Connecting rod M. Adjusting nut
N. Cross shaft lever

pedal from returning to the fully engaged position. When the clutch pedal is against the stop on the clutch housing, and the hand clutch lever is locked in the engaged position, the adjusting nut should be $\frac{1}{16}$ in. (1·5 mm) clear of the pin.

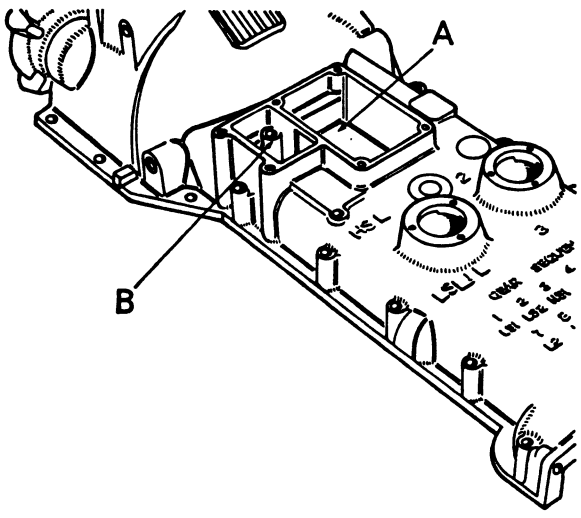

Figure 35.
GEARBOX COVER — 780/770/3800 TRACTORS
A. Steering box oil bath B. Main frame bolt hole

Clutch Removal

770, 780 and 3800 Tractors: Clutch can be removed after the combined gearbox top and clutch housing has been removed. Procedure for Livedrive and Non-Livedrive differs on one point only — on Livedrive models the power take-off unit must be removed so that the PTO cardan shaft can be withdrawn clear of clutch.

1. Remove earth lead from battery terminal. Remove fuel tank with instrument panel attached to it. Disconnect throttle control from hand lever and drag link from drop arm. If tractor is fitted with power-assisted steering, tie steering ram to tractor frame to avoid straining pipes. Remove steering box, complete with column and wheel.
2. Disconnect wiring from starter and remove starter from clutch housing. Remove the two figure-of-eight spring clips which hold clutch fork to release bearing carrier: these are accessible through aperture on underside of main frame.
3. Remove gearbox cover — 17 bolts into main frame, five bolts into rear axle. Note that one of the main frame bolts is inside the steering box oil bath. (Fig. 35.)
4. On Livedrive models, drain transmission oil into a *clean* container, remove power take-

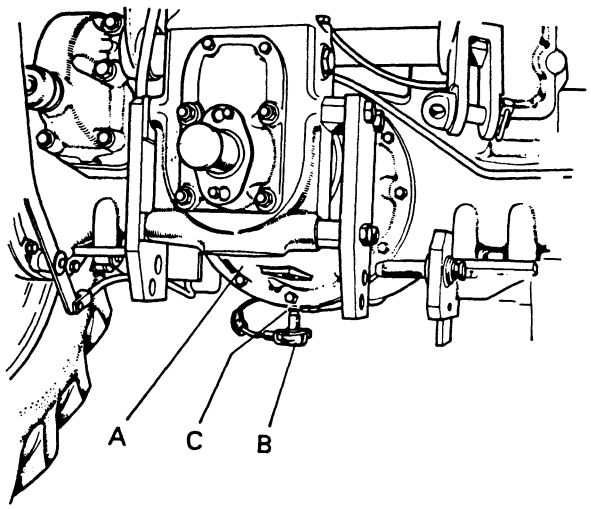

Figure 36. REMOVING OIL FILTER SWITCH ADAPTOR
A. PTO case B. Adaptor C. 'O' ring — adaptor

off unit and withdraw cardan shaft until it is clear of clutch.

Caution: Tractors with a hydraulic filter warning lamp have a switch for this lamp under the PTO unit and it is necessary to remove switch adaptor from PTO case before PTO unit can be withdrawn. (Fig. 36.)

5. Release circlip at front of muff coupling and slide coupling forward. Detach release bearing support snout from frame by removing the three fixing bolts. If tractor is fitted with a band type clutch stop, disconnect the band and remove stop assembly out of frame.
6. Remove bolts attaching clutch cover to flywheel, placing a $\frac{7}{16}$ in. nut under each release lever at the same time, to prevent the thrust springs expanding too far. Lift clutch and driveshaft assembly out of frame; raise cover first and follow with shaft.
7. Retain the three flywheel springs until required for assembly.

Clutch Replacement

770, 780 and 3800 Tractors: After servicing the clutch unit (see appropriate page) and checking the components with reference to the fault-finding information on Page 37, replace the clutch in reverse order to removal, main points to note being listed below.

1. Fit PTO plate with hub towards flywheel and separator plate with assembly marks aligned.
2. Place the three springs in flywheel holes. Assemble release bearing and support snout on shaft, fitting new 'O' ring in snout groove.
3. Fit driveshaft assembly in clutch cover and fit transmission driven plate on shaft — hub towards flywheel — then fit assembly on to flywheel. Line up dowel holes and replace bolts, tightening evenly and by diametrical selection until fully tightened.
4. Check muff coupling end-float. This should be not less than 0·010 in. (0·25 mm) and may be increased by removing shims from behind rear end of coupling.
5. Before fitting gearbox cover, check that clutch cross shaft spring is correctly located against fork and casting and set clutch stop, if fitted. (See Page 25.)
6. Refit the figure-of-eight spring clips to clutch fork, working through the bottom of main frame.
7. When assembly is completed, adjust pedal free-play and if necessary reset pedal, or lever, on cross shaft splines. (See Page 7.) Adjust clutch stop, if fitted.

Removing Clutch — 880 and 990 Tractors

The most convenient method of removing the clutch depends on the tractor type. All Livedrive tractors are fitted with a band type clutch brake. On early tractors this prevented the muff coupling on six-speed tractors being slid far enough forward to clear the gearbox driveshaft. This means that the clutch must be removed by splitting the tractor — as on 12-speed models.

On later models a change was introduced reducing the width of the clutch-stop drum, allowing the clutch to be removed out of the top of main frame after the gearbox cover has been removed — as on Non-Livedrive models.

Clutch removal methods for different tractors are as below:

1. **Non-Livedrive 6-speed Tractors:** Remove gearbox and clutch cover and lift out the clutch — Method 'A'.
2. **Livedrive 6-speed Tractors:** Up to Serial Numbers 990/A/487806, 880/A/533604. Split the tractor and remove the clutch from the flywheel — Method 'B'.
3. **Livedrive 6-speed Tractors:** Serial Numbers 990/A/487807 onwards, 880/A/533604 onwards, 4600/900001 onwards. Remove the gearbox and clutch cover and lift out the clutch — Method 'A'.
4. **Livedrive 12-speed Tractors:** Split the tractor and remove the clutch from the flywheel — Method 'B'.

Removing Clutch Upwards — Method 'A'

1. Disconnect fuel pipes, wiring, and throttle and stop control linkages. On 990 tractors, remove throttle lever.
2. Remove fuel tank and instrument panel. Disconnect steering drop-arm.

3. On 990 Tractors only: Remove steering-box to obtain access to the bolt beneath it which passes through the spacer wedge and into the clutch housing.
4. Remove all gearbox cover fixing bolts (five through the rear axle) and lift cover off main frame. On 880 Tractors the gearbox cover and steering-box can be removed as a unit.
5. On 990 Tractors only: Disconnect the main lead and remove starter motor.
6. Slacken clutch free-play adjusting screw and remove clutch cover.
7. On Livedrive models only: Remove clutch stop brake band by disconnecting it at both ends. Release circlips locating the brake drum and slide the drum forwards to the support snout.
8. Release circlip retaining the muff coupling and slide coupling fully forwards. Do not disturb muff coupling end-float adjusting shims on gearbox drive shaft.
9. On Livedrive models remove PTO housing and withdraw PTO cardan shaft.

   Caution: Tractors with a hydraulic filter warning lamp have a switch for this lamp under the PTO unit and it is necessary to remove switch adaptor from PTO case before PTO unit can be withdrawn. (Fig. 36.)
10. Detach support housing from main frame by unscrewing the three fixing bolts and remove the two spring clips securing cross-shaft fork to release bearing carrier.
11. On Non-Livedrive models, slide the support snout and clutch shaft away from flywheel until the clutch shaft is clear of flywheel spigot bearing.
12. Remove the bolts fixing clutch cover to flywheel, wedging a $\frac{7}{16}$ in. nut under each release lever as this is done. These nuts prevent the clutch thrust spring expanding too far and so assist removal.
13. Ease clutch cover assembly off its dowels and remove the clutch and shaft assembly complete from the main frame.
    On Non-Livedrive tractors this can be done by lifting the rear of the clutch shaft until it is clear of the gearbox and then lifting the whole unit rearwards and upwards. On Livedrive tractors the rear of the clutch shaft must first be lowered into the main frame and the unit then lifted out, cover assembly first.
14. Mark the clutch cover, separator plate and flywheel to ensure replacement in the same relative positions. Retain the three push-off springs for reassembly.

Clutch Replacement — Method 'A'

The clutch should be replaced in the reverse order to removal, special attention being given to the following points.

1. Examine the flywheel spigot bearing and replace if necessary. Place a small quantity of high-melting-point grease in the cavity behind the bearing.
2. Check the fit of the drive plates on the clutch shaft. The plates should slide freely on the spline without excessive slackness. Fit the plates with the hub towards the flywheel. (Borglite plates — "Flywheel" mark to flywheel.)
3. Check that the separator teeth backlash is within the following limits:
   10/10 in. double clutch—0·010 in. to 0·014 in.
   11/10 in. double clutch—0·007 in. to 0·011 in.

If the tolerance is above that quoted, rattle may occur when the clutch is operated but if the tolerance is below that quoted then difficulty may be experienced in engaging the PTO gears, due to the PTO clutch dragging.

4. Refit clutch cover with dowel holes in alignment with dowels in flywheel. Tighten the bolts progressively and by diagonal selection to avoid distortion of cover.
5. Check that the clutch cross shaft is not binding in the main frame.
6. Check that PTO cardan shaft is straight. If bent more than 0·005 in. (0·127 mm) it may foul on the inside of the hollow transmission shaft.
7. Check that the support snout bearing is a clearance fit on the clutch shaft. The bearing should have a radial clearance of 0·0015 in. (0·4 mm), 6-speed or 0·006 in. (0·15 mm) 12-speed.
8. Check the muff coupling end-float, 0·010 in.–0·040 in. (0·25 mm–1·01 mm).
9. On 990 Tractors the clutch housing and gearbox cover are bolted together to increase the effective depth of the main frame. To obtain a rigid attachment a taper wedge is fitted between the housing and the cover faces. After firmly bolting the clutch housing and gearbox cover in position — tightening the gearbox cover against the rear axle before tightening the cover-to-main-frame bolts — place the wedge in the gap between the two faces and push the bolts through the holes in gearbox cover. If the wedge is not tight in the gap when the bolts are screwed in loosely, push the wedge upwards and add shims so that when the bolts are tightened the housing and cover are bolted solidly together without being distorted.
10. When the replacement is completed, readjust the clutch free-play and clutch stop, if fitted.

Removing the Clutch by Splitting the Tractor — Method 'B'

As the engine and transmission units are heavy and require to be aligned carefully when being reassembled, this operation should be carried out with the tractor standing on firm, level ground.

Place a jack under the front end of rear main frame so that it can support the rear half of tractor when the front main frame is withdrawn. Place a block of wood between the jack and main frame and extend the jack so that it takes weight but does not lift the tractor. Drive two suitable wooden wedges between each side of the front extension and axle

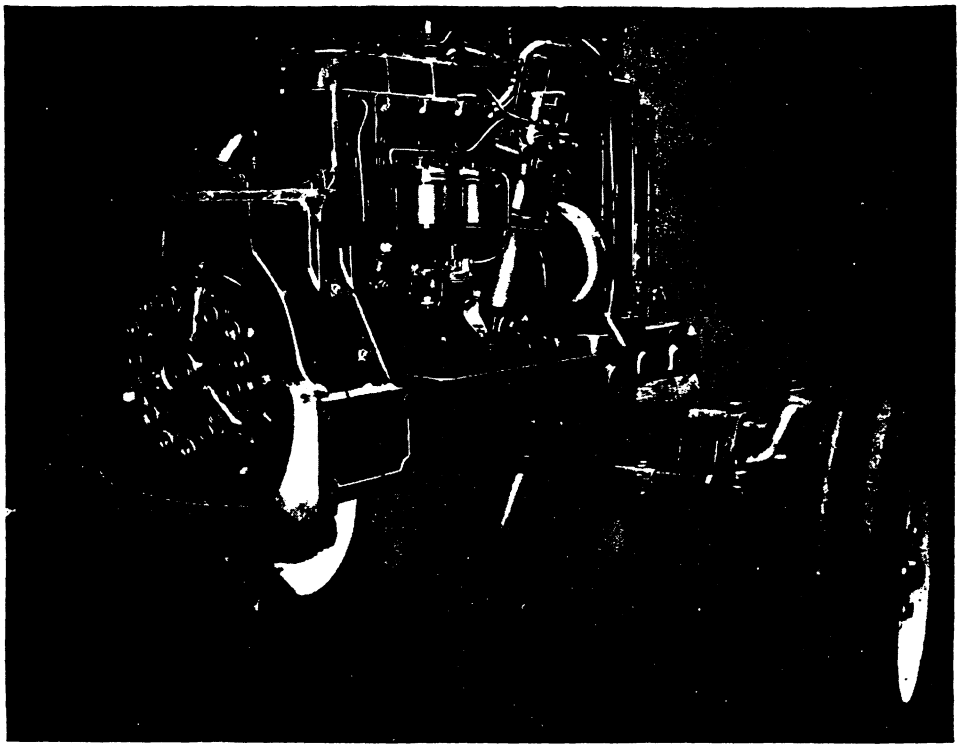

Figure 37. 880 TRACTOR "SPLIT" FOR CLUTCH REMOVAL
A. Supporting wedge B. Clutch assembly C. Flywheel housing

beam, so that the engine unit will remain upright. The wedges should be of hard wood and approximately 5 in. (12·5 cm) long so that they can be driven firmly into position without any possibility of becoming dislodged. Place a trolley jack under the flywheel housing so that the engine unit can eventually be drawn forwards.

Procedure — Method 'B'

1. Disconnect throttle and stop control linkages.
2. On 990 Tractors remove the throttle lever.
3. Disconnect fuel pipes and wiring, and remove fuel tank and instrument panel.
4. Disconnect main lead and remove starter motor (990 only).
5. Disconnect steering drop-arm.
6. Remove the bolts attaching the clutch cover and rear main frame to front section of the tractor.
7. Draw the front half of tractor forwards until it is clear of clutch driveshaft. To avoid damaging the clutch plates or driveshafts adjust the two jacks so that the front and rear main frames are withdrawn squarely away from each other.
8. Fit a $\frac{7}{16}$ nut under each release lever and unbolt the clutch unit from the flywheel.
9. Mark the separator plate and withdraw it from flywheel. Retain the three push-off springs until required for assembly.

Replacing

1. Examine flywheel spigot bearing and replace if necessary. Place a small amount of high-melting-point grease in the cavity behind the bearing.
2. Place the three push-off springs into the holes in flywheel and fit driven plate in position (hub to flywheel).
3. Fit separator plate into flywheel with the markings aligned.
4. A mandrel, or pilot clutch shaft (see Fig. 38), will be required to centralise the driven plates as the clutch assembly is fitted to the flywheel. Insert this pilot shaft through the clutch cover bearing and fit transmission plate on to it (hub to flywheel side).
5. Bolt clutch assembly to flywheel, the end of the mandrel being located in the flywheel spigot bearing. Tighten bolts progressively and by diagonal selection to avoid distortion and then withdraw the mandrel.
6. Check that the adjusting screw clearances are 0·070 in. (1·8 mm) as these are more accessible when the tractor is split.
7. Check that clutch release mechanism is in order and that cross shaft is not binding in main frame. Fully release the pedal free-play adjustment.
8. Ensure that the PTO cardan shaft is engaged on the splines of the input shaft in the PTO

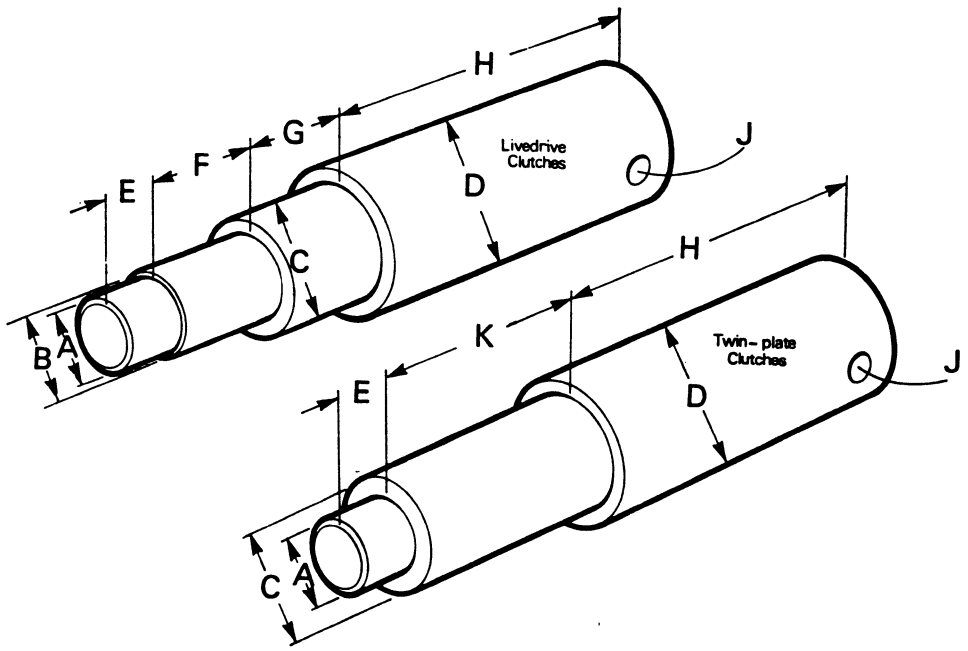

Figure 38. CLUTCH PLATE PILOT — LIVEDRIVE TRACTORS (EXCEPT 1200)

A. 0·874 in (22·20 mm)	B. 0·915 in (23·24 mm)	C. 1·420 in (36·07 mm)
D. 1·771 in (44·98 mm)	E. $\frac{5}{8}$ in (15·88 mm)	F. $1\frac{1}{2}$ in (38·10 mm)
G. $1\frac{3}{4}$ in (44·45 mm)	H. 5 in (127 mm)	J. $\frac{3}{8}$ in (9·5 mm) dia. hole
	K. $3\frac{1}{4}$ in (82·55 mm)	

housing and also that it is pushed fully to the rear.

9. Clean the faces of the two halves of the tractor and push together. (It is essential that the two faces should be parallel and in line and two guide studs temporarily screwed into the main frame will assist aligning the two halves.) When the clutch driveshaft enters the cover, turn the engine so that the splines on the driven plates can be lined up with those on the driveshaft and cardan shaft.
10. When the two sections are together and have entered into the dowels, fit the bolts and fully tighten.
11. Refit starter and throttle lever on the 990 Tractor.
12. Replace fuel tank, reconnect fuel pipes, throttle and stop controls, and steering drop-arm.
13. Adjust pedal linkage as described on page 6, and clutch stop, if fitted.

Clutch Removal

1200 Tractors:

1. Remove bonnet top, grille and tool box. Disconnect battery and remove starter.
2. Disconnect drag link from drop arm. If tractor is fitted with power-assisted steering tie ram to tractor frame, to avoid straining pipes.
3. Unscrew engine speed indicator cable, disconnect fuel pipe and instrument panel wiring so that fuel tank and panel can be removed complete.
4. Drain steering box oil, disconnect hand throttle and remove steering box, complete with column and wheel.
5. Drain transmission oil into *clean containers*, capacity approximately 10 gallons (45·4 litres).
6. Remove seat and support from rear axle case. Remove drawbar and lower links.
7. After removing sensing unit, remove the twelve bolts attaching PTO case to axle case then remove PTO unit so that cardan shaft can be withdrawn clear of clutch. (Fig. 39.)
8. Remove gearbox cover — five bolts into rear axle case, four bolts into clutch housing and 14 bolts into main frame (two of these are inside steering cavity). (Fig. 40.)
9. Remove clutch housing — three bolts into starter support plate and six into main frame. Place PTO clutch lever in "disengaged" position and hook three retaining staples, Part No. 962188, between the PTO release levers and cover, then unlock hand lever and allow the staples to hold the levers towards the clutch cover. (Fig. 21.)
10. Release circlip at front of muff coupling from its groove in driveshaft and if coupling is fitted with wedge-shaped plungers, remove these by lifting retaining clip to one side so that plungers may be extracted. As the two plungers are fitted the opposite way round, note which way each plunger chamfer is fitted.

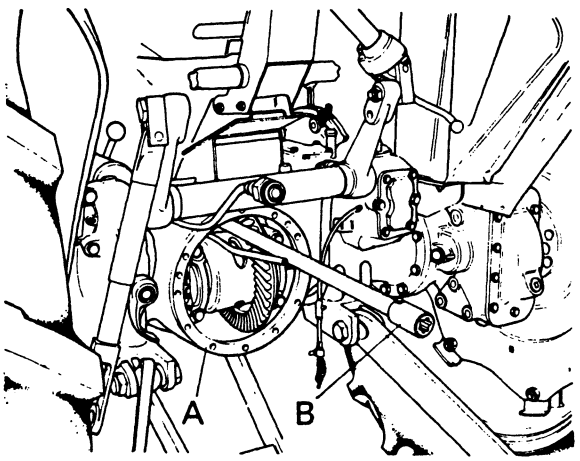

Figure 39.
PTO CARDAN SHAFT WITHDRAWN FROM CLUTCH
A. Rear axle case B. Cardan shaft

11. Fully unscrew adjusting nut on PTO clutch connecting rod and disconnect PTO release bearing carrier by removing the special bolt from one side and pivot pin from other side of cross shaft fork.
12. Unscrew adjusting nut on transmission connecting rod to end of thread and remove the three screws attaching support snout and clutch stop to main frame.
13. Remove the nine long bolts attaching clutch assembly to flywheel, but do not remove the short bolts attaching clutch cover to separator housing. Lift clutch unit, complete with driveshaft, release bearings and support snout, out of the tractor. Raise driveshaft first, then lift complete assembly upwards and rearwards.
14. Withdraw driveshaft from separator housing and remove release bearings, etc.

Refitting Clutch Unit

Before refitting clutch unit, first check the following:

1. Examine PTO clutch linkage; lubricate hand lever catch and pivot. Check that cross shaft operates quite freely in main frame.
   Examine release bearing and renew if any signs of roughness are apparent. On later tractors the bearing housing is connected by a flexible tube to the cross shaft bearing grease passage so that the bearing is lubricated at the same time as the left-hand bearings. If the bearing does not have provision for being lubricated during service, ensure that it is packed with molybdenum disulphide, lithium based grease.
   If the pin on the right-hand side of the release bearing housing is only 2 in. (50·8 mm) long, replace this with a later type pin, Part No. 925323, which is $2\frac{1}{4}$ in.

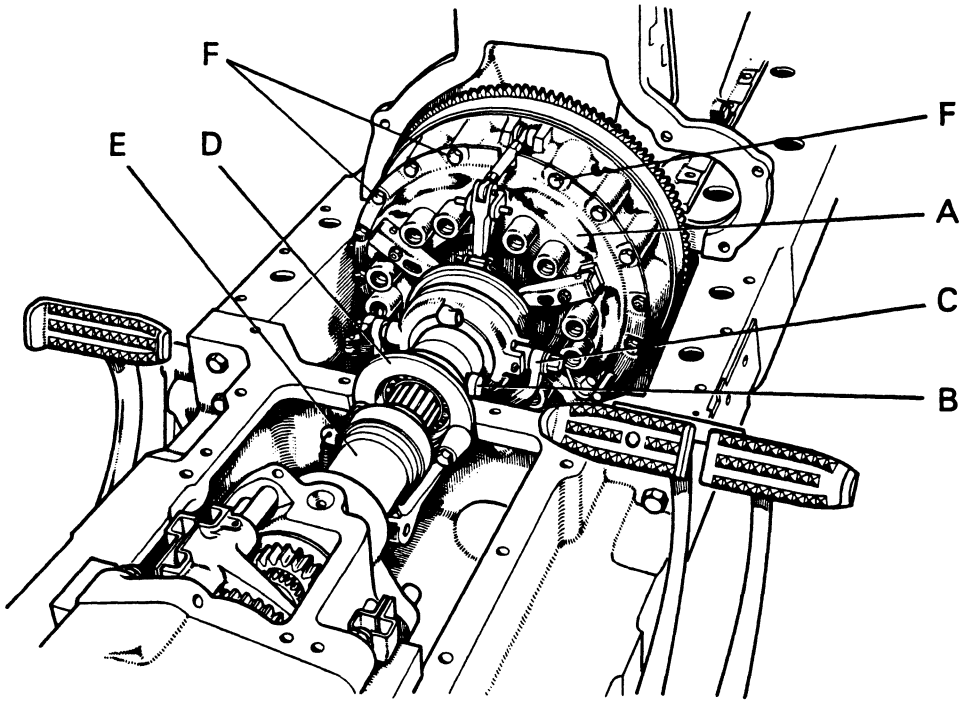

Figure 40. 1200 TRACTOR WITH CLUTCH HOUSING AND GEARBOX COVER REMOVED
A. Clutch assembly B. Transmission release fork C. PTO release fork
D. Support snout E. Muff coupling F. Bolts — clutch to flywheel

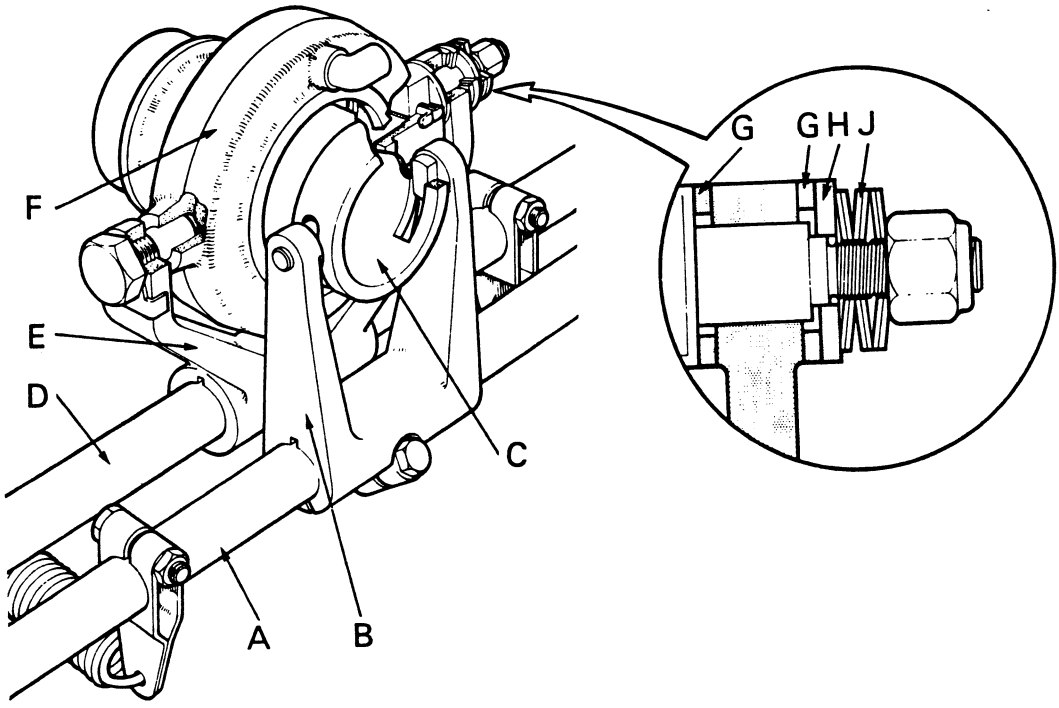

Figure 41. CLUTCH RELEASE MECHANISM — 1200 TRACTORS

A. Cross shaft
B. Fork
C. Sleeve
} Transmission clutch

D. Cross shaft
F. Bearing carrier
H. Special washer
E. Fork
G. Friction washer
J. Belleville washer

(57·1 mm) long and the additional length of thread will allow six Belleville washers to be fitted in place of a single washer fitted on earlier, shorter, pin. (Fig. 41.) Fit tabwasher (626399) on left-hand pivot pin.

2. Examine transmission clutch linkage: lubricate pedal pivot and ensure that pedal does not foul starter switch wire conduit. Check that cross shaft operates freely. Lubricate pins in cross shaft fork with anti-scuffing paste. Renew release bearing if rough or dry: if bearing is renewed, fit latest type bearing, Part No. 620112. Clean inside of bearing carrier, smear it with anti-scuffing paste and check that carrier slides freely on support snout.

Refit clutch in reverse order of removal, taking note of the following:

Lower clutch stop into tractor frame and fit driveshaft, complete with release bearings, support snout, circlip and muff coupling into clutch unit. Fit PTO driven plate in flywheel and lower complete assembly into position, taking care to locate the two release bearing carriers in their forks. Slide cardan shaft into the clutch until it passes through PTO driven plate and enters flywheel spigot bearing, then bolt clutch assembly to flywheel.

Bolt support snout and clutch stop to main frame, slide muff coupling on to gearbox mainshaft and slide circlip into driveshaft groove. Muff couplings without plungers can be fitted on any spline but couplings with plungers must be fitted with plunger holes opposite chamfered splines on shafts, the plunger tapers will then be against a chamfer and not against a spline corner. As the plunger tapers must be towards the non-driving side of spline ensure that front plunger is fitted with taper on its leading side and taper on rear plunger towards its trailing side.

No undue force should be required when sliding coupling on to gearbox shaft and, when retaining circlip is in position, coupling should have 0·008 to 0·040 in. (0·20 to 0·01 mm) end-float. If necessary this can be increased by removing shims from rear end of coupling.

Connect PTO release bearing carrier to its fork, fitting six Belleville washers, plain washer and two friction washers as shown in Fig. 41. Tighten the Nyloc nut to compress Belleville washers then unscrew a half-turn.

Set clutch stop (see Page 26) before replacing gearbox cover. Smear new cover gaskets with grease, to hold them in position, then fit cover and tighten bolts down into main frame only sufficient to hold cover against main frame face. Fully tighten bolts through rear axle case then fully tighten cover-to-main-frame bolts. Place spacing wedge in gap between gearbox cover and clutch housing. If wedge is not tight, add shims until wedge is so tight it has to be driven in with a copper hammer. When the bolts are fully tightened, housing and cover will then be bolted solidly together without distortion.

After replacing steering box, refill with oil to level-plug and refill transmission with oil after fitting PTO unit.

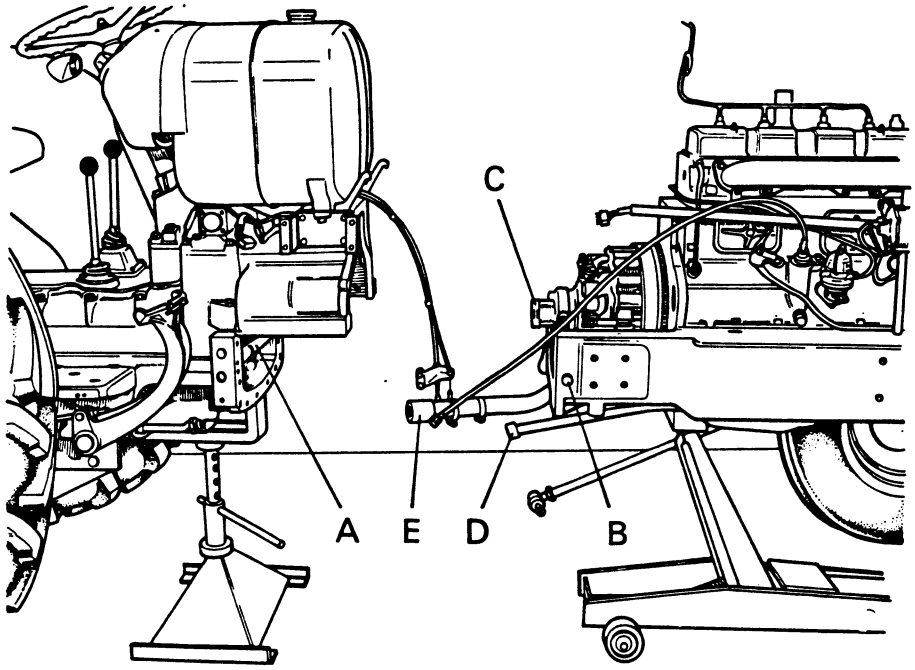

Figure 42. 1200 TRACTOR "SPLIT" FOR CLUTCH REMOVAL

A. Transmission cross shaft B. PTO cross shaft C. Transmission release bearing sleeve
D. Hydraulic pressure pipe E. Hydraulic pump inlet pipe

Ensure that both clutches have the correct amount of free-play. (See Page 16.)

Clutch Removal by Splitting Tractor

This is an alternative method of clutch removal but as the two halves of the tractor are very heavy *it must only be carried out in a workshop with a hard, level floor and if equipment capable of safely supporting the weight of the tractor is available.*

FAILURE TO OBSERVE THESE PRECAUTIONS MAY RESULT IN PERSONAL INJURY AND SERIOUS DAMAGE TO THE TRACTOR.

As it is necessary to centralise the PTO release mechanism very carefully when joining the two halves of tractor together, this method of clutch removal should be carried out by experienced personnel only.

1. With tractor standing on firm, level ground and with ample space round it, firmly apply hand brake.
2. Remove silencer, bonnet top and grille. Disconnect battery leads and remove toolbox.
3. Drain transmission oil into *clean containers,* capacity approximately 10 gal (45 litres).
4. Remove starter motor. Disconnect main wiring harness connectors under fuel tank and wiring to oil warning lamp switch.
5. Release guide tube wiring after disconnecting engine speed indicator cable. Disconnect fuel and leak-off pipes from tank.
6. Disconnect throttle and stop cables from injection pump, then remove cable bracket from pump.
7. Disconnect steering drag link from drop arm. If tractor is fitted with hydrostatic steering, disconnect the two flexible ram pipes, also all four pipes from the servo valve and pipes from pump to reservoir. The two large pipes may then be extracted forwards from under fuel tank.

   CAUTION: It is essential that all pipes and connections are sealed against ingress of dirt, otherwise serious damage may occur when the system has been assembled.

8. Remove clutch pit cover. Place hand clutch lever in "disengaged" position and place a retaining staple, Part No. 962188, over each PTO release lever: it will be necessary to turn engine to bring release levers opposite cover aperture. Return hand lever to "engaged" position and check that staples are correctly positioned.
9. Remove adjusting nuts from PTO and transmission rods. Disconnect anchor from transmission cross shaft return spring. This anchor is hooked through a hole in the underside of the main frame, 6½ in. (16·5 cm) forward of main frame joint and 5 in. (12·7 cm) towards the left-hand side of the frame centre line.
10. Disconnect hydraulic pressure pipe at union underneath right-hand foot plate and disconnect pump inlet pipe from filter housing.

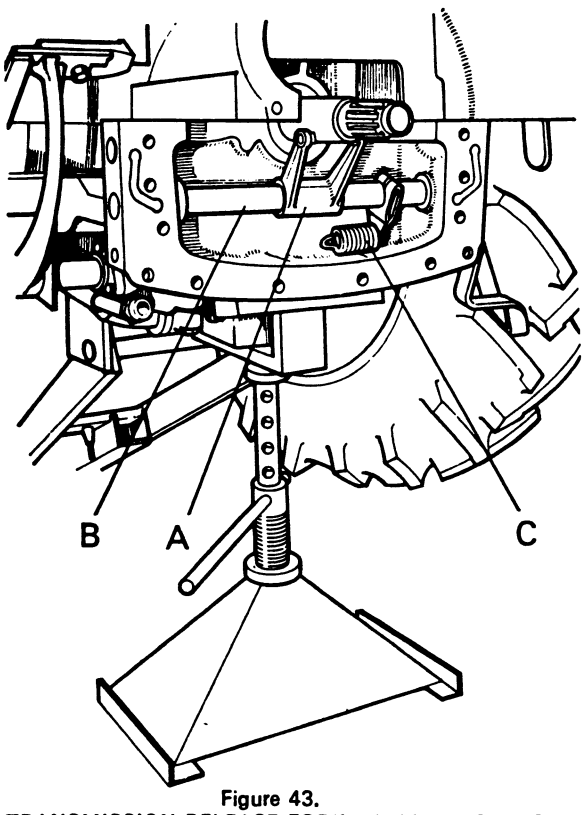

Figure 43.
TRANSMISSION RELEASE FORK - 1200 TRACTORS
A. Release fork B. Cross shaft C. Return spring

Pipe is sealed by an 'O' ring inside housing and on early tractors, where pipe was fitted directly into housing, the pipe should be removed and 3 in. (76·2 mm) cut off the housing end of pipe. Thoroughly clean inside of pipe after cutting. Connecting pipe (921796), hose (917126) and clips (621960) can be fitted during assembly.

11. Remove two centre bolts from main frame joint so that trolley-jack can be located under front frame, behind oil sump. Place an adjustable stand under rear of main frame joint and extend jack and stand so that they take weight but do not lift main frame.
12. Disconnect check chains, remove bolts attaching drawbar frame to PTO and lower frame to ground. If more convenient, the drawbar can be completely removed.
13. Remove sensing unit from PTO case, then remove PTO unit from rear axle case. Withdraw cardan shaft: if coupling is not bolted to cardan shaft, insert a bolt through hole in shaft end so the shaft can be levered out until it is clear of clutch. (Fig. 39.)
14. Drive a wooden wedge between each side of main frame and front axle to hold front end of tractor vertical (Fig. 42). Remove bolts attaching clutch cover to engine and main frame and, after ensuring that stand and jack are supporting weight of frame, remove remaining front-to-rear main frame bolts.
15. With the aid of an assistant, carefully push front of tractor forward until there is a 3 to 4 in. (8 to 10 cm) gap in frame. Remove bolt attaching return spring lever to transmission cross shaft (Fig. 43) so that shaft can turn as main frames are moved further away. If release bearing is fitted with a lubrication pipe, disconnect this from side of main frame.
16. Withdraw front of tractor until clutch is accessible then remove the nine long cover bolts and lift clutch assembly from flywheel.

Replacing the Clutch

To ensure driven plates are centralised, and thus permit driveshafts to be engaged as the two halves of tractor are brought together, a pilot tool made to the dimensions shown in Fig. 44 is required.

Insert pilot through bearing in separator housing so that it centralises transmission plate then fit PTO driven plate on pilot and fit assembly on flywheel. Engage pilot in crankshaft spigot bearing and align cover and flywheel marks. Replace the nine long bolts and tighten evenly and by diametrical selection. Withdraw pilot when bolts have been firmly tightened.

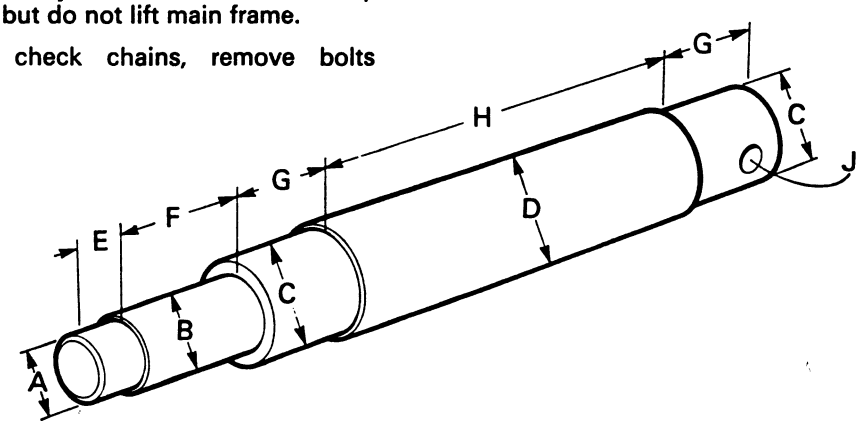

Figure 44. CLUTCH PLATE PILOT — 1200 TRACTORS

A.	0·874 in (22·20 mm)	B.	0·915 in (23·24 mm)	C.	1·374 in (34·90 mm)
D.	1·420 in (36·07 mm)	E.	¾ in (19·05 mm)	F.	2¼ in (57·15 mm)
G.	1½ in (38·10 mm)	H.	6 in (152·4 mm)	J.	⅜ in (9·5 mm) dia. hole

Examination Before Building Tractor

Before commencing to assemble tractor, check the following:

1. Examine release bearings and renew if they show any signs of roughness or are dry. If transmission release bearing is renewed, fit the latest type bearing, Part No. 620112. Clean inside of bearing carrier and check that it slides freely on support snout.
2. If the PTO clutch fork pivot is the early type with only one Belleville washer, fit the latest type pin (925323) and six Belleville washers (626723) as shown in Fig. 41. Tighten the Nyloc nut until the Belleville washers are fully compressed then unscrew half-a-turn. Fit the latest type tabwasher (626399) on the left-hand pivot pin.
3. Check that both clutch cross shafts are quite free in their bearings. Lubricate pins on transmission fork with anti-scuffing paste.
4. Lubricate pedal pivot and check that pedal does not foul starter switch wire conduit. Lubricate hand lever catch and pivot. Check that lever pull-off spring has sufficient tension to hold lever fully forward; if necessary, replace the pull-off spring or fit an additional spring.

Assembling Tractor

1. Screw two $\frac{1}{2}$ UNC×6 in. (15 cm) guide studs into third hole down on each side of front main frame face. Bring the two halves of tractor together until guide studs enter appropriate holes in rear main frame. Ensure slots in transmission bearing carrier are vertical and fork inserts are positioned so that they can enter slots when cross shaft is turned, then continue bringing main frames together until cross shaft can be turned and pins engaged in carrier slots. When the frames are only 3 to 4 in. (7·5 to 10·0 cm) apart examine release fork to make sure that pins are correctly engaged in carrier slots then replace bolt in return spring lever and connect PTO bearing lubrication pipe into left-hand side of main frame.
2. Push two halves of tractor to close the gap and allow a bolt to be fitted in each side of frame but *do not tighten bolts to force frames together.* It will probably be necessary to turn engine before driven plate can be engaged on clutch shaft splines.
3. Push cardan shaft through clutch until it passes through driven plate and into flywheel spigot bearing. If cardan shaft cannot be pushed into spigot bearing, connect linkage and disengage PTO clutch then push shaft in whilst turning it. Refit all main frame and clutch cover bolts and firmly tighten. Connect linkage and adjust. (See Page 16.)
4. Continue assembly of tractor in reverse order of dismantling. Fit new hydraulic oil filter, or wash if earlier gauze type, before filling transmission with oil. If original oil is being replaced, pour through a funnel with a fine strainer and do not replace the last gallon, which will have accumulated any sediment. If tractor is fitted with hydrostatic steering reconnect all pipes, fill with new fluid and then bleed and check system.

CLUTCH FAULT DIAGNOSIS

The most common causes of faulty clutch operation are summarised below for easy reference and if unsatisfactory operation is experienced the appropriate section should be consulted. When a clutch is removed for examination all the points applicable should be checked, because if the fault is due to more than one cause these must all be rectified in order to obtain satisfactory operation.

Operating conditions can also have an effect on clutch operation and these should not be overlooked when investigating clutch problems. The most common causes of clutch failure are due to the operator riding the clutch pedal or not maintaining sufficient pedal free-play.

Livedrive Clutch

Transmission Clutch Slip

1. Insufficient pedal free-play.
2. Insufficient clearance in hand clutch linkage.
3. Cross shaft tight in its bearings.
4. Plate facings worn.
5. Plate facings contaminated with oil.
   If the facings are renewed because of oil contamination the oil leakage should be rectified to prevent a recurrence. Possible sources of oil leakage are: rear main bearing leakage; gearbox leakage due to overfilling, or misplaced front seals. The gearbox oil can also leak along the inside of the clutch driveshaft if the felt seal is misplaced or damaged.
6. Thrust springs weak (see page 45 for checking details).
7. Pressure plate lugs binding in cover slots and preventing pressure plate from being held tightly against the flywheel.
8. Spring cups in cover damaged, causing the cups to foul the spring coils and preventing the springs from exerting their full pressure.
9. Excessive material ground from separator plate, or pressure plate, causing reduction of spring pressure.

Power Take-off Clutch Slip

1. Incorrect adjustment of the three inner adjusting screws.
2. Worn or distorted linings.
3. Separator plate tight in flywheel.
4. Thrust springs weak (see page 45 for details).
5. Pressure plate lugs binding in cover slots and preventing pressure plate from being held tightly against the drive plates.
6. Excessive material ground from separator plate causing reduction of spring pressure.
7. Spring cups in cover damaged, causing cups to foul the spring coils and preventing the springs from exerting their full pressure.

Transmission Clutch Drag

1. Incorrect pedal free-play adjustment.
2. Incorrect adjustment of hand clutch linkage.
3. Incorrect adjustment of inner cover adjusting screws and/or pedal roller eccentric.
4. Incorrectly adjusted clutch stop.
5. Plate facings dragging due to being contaminated with oil.
   If the facings are renewed because of oil contamination the oil leakage should be rectified to prevent a recurrence. Possible sources of oil leakage are: rear main bearing leakage; gearbox leakage due to overfilling, or misplaced front seals. The gearbox oil can also leak along the inside of the clutch driveshaft if the felt seal is misplaced or damaged.
6. Incorrect release lever setting.
7. Wear in release mechanism: release lever ends, pivots or needle rollers.
8. Drive plate tight on clutch shaft splines.
9. Drive plate distorted: the plate should not be more than 0·015 in. (0·38 mm) out of true.
10. Driveshaft not revolving freely in cover bearing. This may be due to a seized or damaged bearing, but can also be caused by the bearing being distorted by the cover bore. The bearing must not be tight in the bore and if necessary the bore should be scraped out until the bearing can be pushed into place by hand. The bearing housing must also be concentric with the clutch cover and to check this it is necessary to remove and dismantle the clutch, then replace the cover assembly on the flywheel. Bearing bore run-out can then be checked with a dial gauge: if the total dial variation exceeds 0·004 in. (0·10 mm) correct by scraping the bore. A slight increase in bore diameter will not be detrimental.
11. Power take-off shaft fouling inside of clutch shaft. There should be no contact between the cardan shaft and driveshaft except by the felt sealing ring. Straighten the cardan shaft if it is more than 0·005 in. (0·13 mm) out of true when turned between the centres. Check the

inner bore of the clutch driveshaft: if the bore is marked cardan shaft is out of true.

12. Muff coupling end-float or alignment: the coupling should have not less than 0·010 in. (0·25 mm) end-float and should be free to engage in all spline positions through 360°, otherwise the clutch shaft and gearbox input shafts are not in line. If the shafts are not in line check the clutch shaft support bearing — there should be radial clearance between the shaft and bearing, 0·0015 in. (0·04 mm) on 6-speed and 0·006 in. (0·015 mm) on 12-speed — and check the gearbox mountings: the gearbox is not mounted rigidly to the main frame but should have not less than 0·012 in. (0·30 mm) "float".

13. Separator plate tapered across diameter. The plate should be completely flat with a maximum of 0·002 in. (0·05 mm) surface ripple.

Power Take-off Clutch Drag

1. Incorrect pedal free-play adjustment.
2. Incorrect adjustment of cover adjusting screws.
3. Drive plate facings bonded to flywheel, due to infrequent use. It is important that the power take-off clutch is disengaged periodically, to prevent any possibility of the facings adhering to the flywheel face.
4. Incorrect release lever height setting.
5. Distorted ~~drive~~ plate: the plate should not be more than 0·015 in. (0·38 mm) out of true.
6. Seized flywheel spigot bearing.
7. Insufficient clearance between separator plate and flywheel. The plate teeth backlash can be checked with a feeler gauge and should be 0·007–0·011 in. (0·18–0·28 mm) on a 990 clutch, or 0·010–0·014 in. (0·25–0·35 mm) on other clutches.

Dual Clutch

Transmission Clutch Slip

1. Insufficient pedal free-play.
2. Cross shaft tight in bearings
3. Release bearing housing tight on support snout.
4. Plate facings worn.
5. Plate facings contaminated with oil. If facings are renewed because of oil contamination the oil leakage should be rectified to prevent a recurrence. Possible sources of oil leakage are: rear main bearing leakage; gearbox leakage due to over-filling or misplaced seals. Gearbox oil may also leak along inside of clutch drive shaft if heart-shaped seal is displaced or damaged.
6. Thrust springs weak (see Page 49 for checking details).
7. Pressure plate lugs binding in cover slots and preventing pressure plate being held tightly against separator housing.
8. Spring cup in cover damaged and causing cups to foul coils and prevent springs exerting full pressure.
9. Excessive material ground from pressure plate, causing reduction of spring pressure.

Power Take-Off Clutch Slip

1. Insufficient free-play in linkage.
2. Cross shaft tight in bearings.
3. Hand lever pivot seized.
4. Pressure plate lugs binding in separator housing.
5. Release levers, or toggles, binding or fouling.
6. Worn plate facings.
7. Weak thrust springs (see Page 49 for checking details).

Transmission Clutch Drag

1. Incorrect free-play adjustment.
2. Incorrectly adjusted clutch stop.
3. Plate facings dragging due to being contaminated with oil. If facings are renewed because of oil contamination, the oil leakage should be rectified to prevent a recurrence. Possible sources of oil leakage are: rear main bearing leakage; gearbox leakage due to overfilling or displaced front seals. Gearbox oil can also leak along inside of clutch driveshaft if heart-shaped seal is displaced or damaged.
4. Incorrect release lever setting.
5. Wear in release mechanism, release lever ends or pivots.
6. Driven plate tight on shaft splines.
7. Driven plate distorted: plate should not be more than 0·015 in. (0·38 mm) out of true.
8. Driveshaft not revolving freely in separator housing bearing. This may be caused by a seized or damaged bearing, but can also be caused by bearing being tight in housing bore. The bearing must not be tight in bore

and bore must be concentric. If bore variation exceeds 0·004 in. (0·10 mm) when checked with dial gauge, correct by scraping bore. A slight increase in bore diameter will not be detrimental.

9. Power take-off cardan shaft fouling inside of clutch driveshaft. There should be no contact between shafts, except by the sealing ring. Straighten cardan shaft if it is more than 0·005 in. (0·13 mm) out of true when turned between centres.
10. Muff coupling end-float or alignment: coupling should have not less than 0·010 in. (0·25 mm) end-float and should be free to engage in all spline positions through 360°, otherwise clutch and gearbox shafts are not in line. If shafts are not in line, check clutch support snout bearing — there should be 0·0015 in. (0·04 mm) radial clearance between shaft and bearing — and check gearbox mountings: gearbox is not mounted rigidly in frame but should have not less than 0·012 in. (0·30 mm) "float" when gearbox cover is bolted down.

Power Take-Off Clutch Spin

1. Incorrect free-play in hand lever.
2. Driven plate facings bonded to flywheel due to infrequent use. It is important that PTO clutch is disengaged periodically, to prevent any possibility of facings adhering to flywheel face.
3. Incorrect release lever height setting.
4. Distorted driven plate: plate should be not more than 0·015 in. (0·38 mm) out of true.
5. Seized flywheel spigot bearing.

Single Clutch

Clutch Slip

1. Incorrect pedal free-play.
2. Incorrect adjustment of hand clutch linkage.
3. Cross shaft tight in its bearings.
4. Drive plate facings worn.
5. Drive plate facings contaminated with oil.
   If the facings are renewed because of oil contamination the oil leakage should be rectified to prevent a recurrence. Possible sources of oil leakage are: rear main bearing leakage; gearbox leakage due to overfilling, or misplaced front seals.
6. Thrust springs weak (see page 45 for checking details).
7. Pressure plate lugs binding in cover slots and preventing plate from being held tightly against the flywheel.
8. Excessive material ground from pressure plate, causing reduced pressure of thrust springs.

Clutch Spin

1. Incorrect pedal free-play.
2. Incorrect release lever height setting.
3. Clutch stop friction pad worn.
4. Plate facings dragging due to being contaminated with oil.
   If the facings are renewed because of oil contamination the oil leakage should be rectified to prevent a recurrence. Possible sources of oil leakage are: rear main bearing leakage; gearbox leakage due to overfilling, or misplaced front seals.
5. Drive plate distorted: plate should be not more than 0·015 in. (0·38 mm) out of true.
6. Drive plate hub tight on clutch shaft splines.
7. Worn release mechanism: release lever ends, pivots or eyebolts.
8. Seized flywheel spigot bearing.
9. Muff coupling end-float or alignment: the coupling should have not less than 0·010 in. (0·25 mm) end-float and should be free to engage in all spline positions through 360°, otherwise the clutch shaft and gearbox input shafts are not in line. If the shafts are not in line check the clutch shaft support bearing — there should be 0·0015 in. (0·04 mm) radial clearance between the shaft and bearing — and check the gearbox mountings: the gearbox is not bolted rigidly to the main frame but should have not less than 0·012 in. (0·30 mm) "float".

Twin Plate Clutch

Clutch Slip

1. Insufficient pedal free-play.
2. Cross shaft tight in its bearings.
3. Plate facings worn.
4. Plate facings contaminated with oil.
   If the facings are renewed because of oil contamination the oil leakage should be rectified to prevent a recurrence. Possible sources of oil leakage are: rear main bearing leakage; gearbox leakage due to overfilling, or misplaced front seals.

5. Thrust springs weak (see page 48 for checking details).
6. Pressure plate lugs binding in cover slots and preventing pressure plate from being held tightly against the flywheel.
7. Spring cups in cover damaged, causing the cups to foul the spring coils and preventing the springs from exerting their full pressure.
8. Excessive material ground from separator plate, causing reduction of thrust spring pressure.

Clutch Drag

1. Incorrect pedal free-play adjustment.
2. Incorrect adjustment of inner cover adjusting screws.
3. Clutch stop friction pad worn.
4. Plate facings dragging due to being contaminated with oil.

   If the facings are renewed because of oil contamination the oil leakage should be rectified to prevent a recurrence. Possible sources of oil leakage are: rear main bearing leakage; gearbox leakage due to overfilling or misplaced seals.
5. Incorrect release lever setting.
6. Wear in release mechanism: release lever ends, pivots or needle rollers.
7. Driven plates tight on shaft splines.
8. Drive plates distorted. Plates should be not more than 0·015 in. (0·38 mm) out of true.
9. Driveshaft not revolving freely in cover bearing. This may be due to a seized or damaged bearing, but can also be caused by the bearing being distorted by the cover bore. The bearing must not be tight in the bore and if necessary the bore should be scraped out until the bearing can be pushed into place by hand. The bearing housing must also be concentric with the clutch cover and to check this it is necessary to remove and dismantle the clutch, then replace the cover assembly on the flywheel. Bearing bore run-out can then be checked with a dial gauge: if the total dial variation exceeds 0·004 in. (0·10 mm) correct by scraping the bore. A slight increase in bore diameter will not be detrimental.
10. Muff coupling end-float or alignment: the coupling should have not less than 0·010 in. (0·25 mm) end-float and should be free to engage in all spline positions through 360°, otherwise the clutch shaft and gearbox input shafts are not in line. If the shafts are not in line check the clutch shaft support bearing — there should be 0·0015 in. (0·04 mm) radial clearance between the shaft end bearing — and check the gearbox mountings: the gearbox is not bolted rigidly to the main frame but should have not less than 0·012 in. (0·30 mm) "float".
11. If a rear-mounted hydraulic pump, driven directly from the flywheel, is fitted, examine the driveshaft bore to ensure that it is not contacting the pump driveshaft.

CLUTCH SERVICE TOOLS

Baseplate Kits

Basic Baseplate Kit (No. 1) can be used for all Selectamatic Tractor clutches and the various spacers and adaptors, etc., required for different clutches are available in kits so that tool requirements can be matched to the actual range of clutches being serviced.

The list of Baseplate Kits shows the full range, and contents, of kits and the tractor models, and clutches, for which they are required.

As it is essential to use the correct adaptors and spacers, etc., the List of Setting Equipment shows spacers and adaptors to use for each clutch.

Flywheel Kits

An alternative method of setting a clutch unit is to use the tractor flywheel instead of a baseplate and kits of adaptors and spacers, etc., are available to enable clutch units to be serviced by this method.

The list of Flywheel Kits shows the full range, and contents, of kits and the tractor models and clutches for which they are required.

As it is essential to use the correct adaptors and spacers, etc., the list of Setting Equipment shows which adaptors and spacers to use for each clutch.

BASEPLATE KITS

Tractor	Clutch	Kit No. and Part No.	Contents of Kit			Remarks
			Part No.	Description	Qty	
All models	All types	Kit No. 1 **961850**	912917	baseplate	1	Basic baseplate Kit
			961845	centre pillar	1	
			961844	actuator	1	
			961846	setting finger, short	1	
			961086	stud, $\frac{3}{8}$ UNC x $3\frac{3}{8}$ in.	9	
			19472	washer, $\frac{3}{8}$ in.	9	
			607045	nut, $\frac{3}{8}$ UNC	9	
			602806	setscrew, $\frac{5}{16}$ UNC x $1\frac{1}{8}$ in.	6	
			961087	socket, $\frac{9}{16}$ AF (ED 562)	1	
			961697	code card	1	
			961847	operating instructions	1	
			961848	fibre box	1	
Livedrive models		Kit No. 2 **961856**	912723	adaptor — centre pillar	1	Used with Kit 1
770, 780, 880	Borg and Beck 10/10 in.		961853	spacer, Code 8 — centre pillar	1	
990	Borg and Beck 11/10 in.		908888	spacer, Code 16X — centre pillar	1	
3800, 4600	Borg and Beck 10/10 in.		961855	spacer, Code 14 — pressure plate	3	
			912724	spacer — cover to baseplate	9	
780, 880	Laycock 10/10 in.		962577	spacer — pillar adaptor	1	Used with Kits 1 and 2
1200	Borg and Beck 11/11 in.	Kit No. 7 **962135**	920203	setting finger, long	1	Used with Kits 1, 2 and 4
			920198	adaptor — centre pillar (PTO)	1	
			920199	adaptor — centre pillar (Trans.)	1	
			962139	spacer, Code 13 — pressure plate	3	
			920202	bolt, $\frac{3}{8}$/$\frac{5}{16}$ UNC, special	9	
			920201	nut, $\frac{5}{16}$ UNC, special	9	
			920204	adaptor plate — actuator	1	
			962188	retaining staple	3	
			962147	socket (ED 500)	1	
			962220	code card	1	
			962138	operating instructions	1	
Non-Livedrive models — Single-plate clutch						
770	Borg and Beck 9 in.	Kit No. 4 **961862**	961857	spacer, Code 3 — pressure plate	4	Used with Kits 1 and 2
880	Borg and Beck 10 in.					
990	Borg and Beck 11 in.					
1200	Borg and Beck 12 in.					
Non-Livedrive models — Twin-plate clutch						
880	Borg and Beck 10/10 in.	Kit No. 3 **961861**	961843	spacer, Code 17X — pressure plate	3	Used with Kits 1 and 2
990	Borg and Beck 10/10 in.					
990	Borg and Beck 11/10 in.					

KITS FOR USE WITH FLYWHEELS

Tractor	Clutch	Kit No. and Part No.	Contents of Kit			Remarks
			Part No.	Description	Qty	
All models	All types	Kit No. 10 **961866**	961845 961844 961846 13179 961877 19472 19403 961864 961865 961088 961848	centre pillar actuator setting finger, short bolt, $\frac{3}{8}$ BSF x $3\frac{1}{2}$ in. stud, $\frac{3}{8}$ BSF x $3\frac{3}{8}$ in. washer, $\frac{3}{8}$ in. nut, $\frac{3}{8}$ BSF socket, $\frac{3}{8}$ BSF (ED 600) operating instructions code card fibre box	1 1 1 2 8 10 10 1 1 1 1	Basic flywheel kit
Livedrive models 770 780 880 3800 4600	Borg and Beck 10/10 in.	Kit No. 11 **961870**	961867 961868 961853 961859 961855 961869	adaptor, No. 1 — flywheel adaptor, No. 9 — centre pillar spacer, Code 8 — centre pillar spacer, Code 10 — separator plate spacer, Code 14 — pressure plate setting finger, short	1 1 1 3 3 1	Used with Kit 10
770 780 880 3800 4600	Borg and Beck 10/10 in.	Kit No. 14 **961873**	961873	adaptor, No. 2 — flywheel	1	Used with Kits 10, 11 and 12
780 880	Laycock 10/10 in.		962577	spacer — pillar adaptor	1	Used with Kits 10 and 11
990	Borg and Beck 11/10 in.	Kit No. 12 **961871**	908888 961086 607045 961087	spacer, Code 16X — centre pillar stud, $\frac{3}{8}$ UNC x $3\frac{3}{8}$ in. nut, $\frac{3}{8}$ UNC socket, $\frac{9}{16}$ AF (Ed 562)	1 9 9 1	Used with Kits 10 and 11
1200	Borg and Beck 11/11 in.	Kit No. 21 **962137**	920199 920198 962139 920203 920204 962188 920200 920201 962147 962138 962221	adaptor — centre pillar (Trans.) adaptor — centre pillar (PTO) spacer, Code 13 — pressure plate (Trans.) setting finger, long adaptor plate — actuator retaining staple stud, $\frac{9}{16}$ UNC x $5\frac{3}{4}$ in. nut, $\frac{9}{16}$ UNC socket (ED 500) operating instructions code card	1 1 3 1 1 3 9 9 1 1 1	Used with Kits 10, 11, 12, 14 and 19
Non-Livedrive models—Single-plate clutch 770	Borg and Beck 9 in.	Kit No. 18 **961851**	961858 602806	spacer, Code 11 — centre pillar setscrew, $\frac{9}{16}$ UNC x $1\frac{1}{2}$ in.	1 6	Used with Kits 10, 11, 15, 17
780 880 3800 4600	Borg and Beck 10 in.	Kit No. 17 **961876**	961876	adaptor, No. 4 — flywheel	1	Used with Kits 10 and 11
990	Borg and Beck 11 in.	Kit No. 19 **908889**	908889	spacer, Code 15X — centre pillar	1	Used with Kits 10 and 11
1200	Borg and Beck 12 in.	Kit No. 22 **962448**	962139 912724	spacer, Code 13 — pressure plate spacer — pressure plate	4 4	Used with Kits 10, 11, 14, 17
Non-Livedrive models — Twin-plate clutch 880 990 990	Borg and Beck 10/10 in. Borg and Beck 10/10 in. Borg and Beck 11/10 in.	Kit No. 13 **961872**	961855	spacer, Code 14 — separator plate	3	Used with Kits 10, 11 and 12

SETTING EQUIPMENT REQUIRED WHEN USING BASEPLATE

Tractor	Clutch type	Centre pillar spacer	Centre pillar adaptor	Pressure plate spacer	Cover spacer
Livedrive models 770 780 880 3800 4600	Borg and Beck 10/10 in.	Code 8 (961853)	912723	Code 14 (961855)	912724
780 880	Laycock 10/10 in.	Code 8 (961853)	912723 +962577	Code 14 (961855)	912724
990	Borg and Beck 11/10 in.	Code 16X (908888)	912723	Code 14 (961855)	912724
1200	Borg and Beck 11/11 in.	Code 16X (908888)	920199 (Trans.) 920198 (PTO)	Code 13 (962139) Code 3 (961857)	none none
Non-Livedrive models — Single-plate clutch 770	Borg and Beck 9 in.	Code 8 (961853)	none	Code 3 (961857)	none
780 880 3800 4600	Borg and Beck 10 in.				
990	Borg and Beck 11 in.				
1200	Borg and Beck 12 in.	Code 16X (908888)	none	Code 3 (961857)	none
Non-Livedrive models — Twin-plate clutch 880	Borg and Beck 10/10 in.	Code 8 (961853)	912723	Code 17X (961843)	912724
880 990 990	Borg and Beck 10/10 in. Borg and Beck 10/10 in. Borg and Beck 11/10 in.	Code 16X (908888)	912723	Code 17X (961843)	912724

SETTING EQUIPMENT REQUIRED WHEN USING FLYWHEEL

Tractor	Clutch type	Flywheel adaptors	Centre pillar adaptor	Centre pillar spacer	Pressure plate spacers Transmission	PTO
Livedrive models 770 780 880 3800 4600	Borg and Beck 10/10 in.	No. 1 (961867) and No. 2 (961873)	No. 9 (961868)	Code 8 (961853)	Code 14 (961855)	Code 10 (961859)
780 880	Laycock 10/10 in.	Nos. 1 and 2 (961867 and 961873)	No. 9 (961868) and 962577	Code 8 (961853)	Code 14 (961855)	Code 10 (961859)
990	Borg and Beck 11/10 in.	No. 1 (961867)	No. 9 (961868)	Code 16X (908888)	Code 14 (961855)	Code 10 (961859)
1200	Borg and Beck 11/11 in.	Nos. 1 and 2 (961867 and 961873)	920199 920198	Code 16X (908888) Code 16X (908888)	Code 13 (962139) —	Code 10 (961859)
Non-Livedrive models—Single-plate clutch 770	Borg and Beck 9 in.	Nos. 1 and 4 (961867 and 961876)	—	Code 11 (961858)	Code 3 (961857)	—
880 3800 4600	Borg and Beck 10 in.	Nos. 1, 2, 4 (961867, 961873 and 961876)	—	Code 8 (961853)	Code 3 (961857)	—
990	Borg and Beck 11 in.	Nos. 1 and 4 (961867 and 961876)	—	Code 15X (908889)	Code 3 (961857)	—
1200	Borg and Beck 12 in.	Nos. 1 and 2 (961867 and 961873)	No. 9 (961868)	Code 16X (908888)	Code 13 + 912724	—
Non-Livedrive models — Twin-plate clutch 880	Borg and Beck 10/10 in.	No. 1 (961867)	No. 9 (961868)	Code 8 (961853)	Code 14 (961855)	—
990 990	Borg and Beck 10/10 in. Borg and Beck 11/10 in.	No. 1 (961867)	No. 9 (961868)	Code 16X (908888)	Code 14 (961855)	—

DIMENSIONAL DATA

Double Clutch (Livedrive) — 770

Clutch type	Borg and Beck BB10/189C
Plate type and diameter (transmission)	Borglite, 10 in (25·4 cm)
Plate facing material	Capasco F30C
Plate thickness (new)	0·350 in (8·89 mm)
Plate type and diameter (PTO)	rigid, 10 in (25·4 cm)
Plate facing material	Capasco F30C
Plate thickness (new)	0·320 in (8·13 mm)
Number of springs (transmission)	9
Spring colour (inner transmission)	brown
Spring pressure (at checking length)	80–85 lb (36–38 kg)
Spring checking length	2·60 in (66·04 mm)
Spring colour (outer transmission)	brown
Spring pressure (at checking length)	120–130 lb (54–58 kg)
Spring checking length	2·60 in (66·04 mm)
Number of springs (PTO)	6
Spring colour (PTO)	buff
Spring pressure (at checking length)	88–94 lb (39–42 kg)
Spring checking length	2·26 in (57·40 mm)
Separator plate thickness	0·705–0·700 in (17·90–17·78 mm)
Cover adjusting screw clearance	0·070 in (1·78 mm)
Pedal free-play	$\frac{1}{2}$–$\frac{3}{4}$ in (13–19 mm)
Release lever height, i.e.: Distance from the tips of the release levers to the base plate face when the clutch is assembled with 0·349 in. (8·865 mm) thick spacers in place of the transmission plate and 912724 spacers between the cover flange and base plate. This dimension also applies when the clutch is assembled on a flywheel and fitted with 0·310 in. (7·874 mm) thick spacers in place of the power take-off plate and 0·349 in. (8.865 mm) spacers in place of the transmission plate	3·345 in (84·96 mm)
Pedal pad height above footplate when free-play is taken up	$3\frac{3}{4}$–$5\frac{1}{4}$ in (95·0–135·0 mm)

Single Clutch (Non-Livedrive) — 770

Clutch type	Borg and Beck BB9/273A
Plate type and diameter	Borglite, 9 in (22·86 cm)
Plate facing material	Capasco F30C
Plate thickness (new)	0·330 in (8·38 mm)
Number of springs	12
Spring colour	black
Spring pressure (at checking length)	150–160 lb (67–69 kg)
Spring checking length	1·688 in (42·875 mm)
Pedal free-play	$\frac{1}{2}$–$\frac{3}{4}$ in (13–19 mm)
Release lever height: Distance from the tips of the release levers to the base plate or flywheel face when the clutch is assembled with three 0·330 in. (8·382 mm) thick spacers in place of the driven plate	1·895 in (48·13 mm)
Pedal pad height above footplate when free play is taken up	$2\frac{1}{4}$–$3\frac{3}{4}$ in (57·0–95·0 mm)

Double Clutch (Livedrive) — 880

Clutch type	Borg and Beck BB10/167E
Plate type and diameter (transmission)	Borglite, 10 in (25·4 cm)
Plate facing material	Capasco F30C
Plate thickness (new)	0·350 in (8·89 mm)
Plate type and diameter (PTO)	rigid, 10 in (25·4 cm)
Plate facing material	Capasco F30C
Plate thickness (new)	0·320 in (8·13 mm)
Number of springs (transmission)	12
Spring colour (inner transmission)	brown
Spring pressure (at checking length)	80–85 lb (36–38 kg)

Spring checking length	2·60 in (66·04 mm)
Spring colour (outer transmission)	brown
Spring pressure (at checking length)	120–130 lb (54–58 kg)
Spring checking length	2·60 in (66·04 mm)
Number of springs (PTO)	6
Spring colour (PTO)	buff
Spring pressure (at checking length)	88–94 lb (39–42 kg)
Spring checking length	2·26 in (57·40 mm)
Separator plate thickness	0·705–0·700 in (17·90–17·78 mm)
Cover adjusting screw clearance	0·070 in (1·78 mm)
Pedal free-play	1–1½ in (25·4–38·0 mm)
Release lever height, i.e.: Distance from the tips of the release levers to the base plate face when the clutch is assembled with 0·349 in. (8·865 mm) thick spacers in place of the transmission plate and 912724 spacers between the cover flange and base plate. This dimension also applies when the clutch is assembled on a flywheel and fitted with 0·310 in. (7·874 mm) thick spacers in place of the power take-off plate and 0·349 in. (8.865 mm) spacers in place of the transmission plate	3·345 in (84·96 mm)

Laycock double clutch (Livedrive) — alternative fitting 780 and 880

Clutch type	Laycock No. 83939
Plate type and diameter (transmission)	Borglite 10 in (25·4 cm)
Plate facing material	Capasco F30C
Plate thickness (new)	0·340 in (8·63 mm)
Plate type and diameter (PTO)	rigid, 10 in (25·4 cm)
Plate facing material	Capasco F30C
Plate thickness (new)	0·310 in (7·87 mm)
Number of springs	12
Spring colour	pale green
Spring pressure at checking length	103–113 lb (46–51 kg)
Spring checking length	1·5 in (38·1 mm)
Spring overall diameter	0·840 in (21·34 mm)
Separator plate thickness	0·705–0·700 in (17·90–17·78 mm)
Cover adjusting screw clearance:	
clutch on baseplate	0·048 in (1·22 mm)
clutch on flywheel	0·057 in (1·447 mm)
Pedal free-play, 880	1–1½ in (25·4–38·0 mm)
Pedal free-play, 780	¾–1 in (19–25·4 mm)
Release lever height, i.e. distance from head of release lever adjusting screw to baseplate face when clutch is assembled with 0·349 in. (8·865 mm) thick spacers in place of transmission plate and 912724 spacers between cover flange and baseplate. This dimension also applies when clutch is assembled on a flywheel and fitted with 0·310 in. (7·874 mm) thick spacers in place of power take-off plate and 0·349 in. (8·865 mm) spacers in place of transmission plate	3·720 in (94·49 mm)

Single Clutch (Non-Livedrive) — 880

Clutch type	Borg and Beck 10A6G
Plate diameter	Borglite, 10 in (25·4 cm)
Plate facing material	Capasco F30C
Plate thickness (new)	0·330 in (8·38 mm)
Number of springs	12
Spring colour	light green
Spring pressure (at checking length)	105–115 lb (47–52 kg)

Spring checking length	1·688 in (42·875 mm)
Pedal free-play	1–1½ in (25·4–38·0 mm)
Release lever height, i.e.: Distance from the tips of the release levers to the base plate or flywheel face when the clutch is assembled with three 0·330 in. (8·382 mm) thick spacers in place of the driven plate	1·955 in (49·53 mm)

Double Clutch (Livedrive) — 990

Clutch type	Borg and Beck BB11/180E
Plate type and diameter (transmission)	Borglite 11 in (27·44 cm)
Plate facing material	Capasco F30C
Plate thickness (new)	0·350 (8·89 mm)
Plate type and diameter (PTO)	rigid, 10 in (25·4 cm)
Plate facing material	Capasco F30C
Plate thickness (new)	0·320 in (8·13 mm)
Number of springs (transmission)	12
Spring colour (inner-transmission)	brown
Spring pressure (at checking length)	80–85 lb (36–38 kg)
Spring checking length	2·60 in (66·04 mm)
Spring colour (outer transmission)	red
Spring pressure (at checking length)	140–150 lb (63–67 kg)
Spring checking length	2·60 in (66·04 mm)
Number of springs (PTO)	6
Spring colour (PTO)	pink
Spring pressure (at checking length)	113–121 lb (51–54 kg)
Spring checking length	2·26 in (57·40 mm)
Separator plate thickness	0·765–0·760 in (19·44–19·30 mm)
Cover adjusting screw clearance	0·070 in (1·78 mm)
Pedal free-play	1–1½ in (25·4–38·0 mm)
Release lever height, i.e.: Distance from the tips of the release levers to the base plate face when the clutch is assembled with 0·349 in. (8·865 mm) thick spacers in place of the transmission plate and 912724 spacers between the cover flange and base plate. This dimension also applies when the clutch is assembled on a flywheel and fitted with 0·310 in. (7·874 mm) thick spacers in place of the power take-off plate and 0·349 in. (8.865 mm) spacers in place of the transmission plate	3.445 in (87·5 mm)

Single Clutch (Non-Livedrive) — 990

Clutch type	Borg and Beck 11A6G
Plate type and diameter	Borglite 11 in (27·44 cm)
Plate facing material	Capasco F30C
Plate thickness (new)	0·330 in (8·38 mm)
Number of springs	12
Spring colour	yellow/light green
Spring pressure (at checking length)	135–145 lb (61–65 kg)
Spring checking length	1·688 in (42·875 mm)
Pedal free-play	1–1½ in (25·4–38·0 mm)
Release lever height, i.e.: Distance from the tips of the release levers to the base plate or flywheel face when the clutch is assembled with three 0·330 in. (8·382 mm) thick spacers in place of the driven plate	1·955 in (49·53 mm)

Twin Plate Clutch — 880 (Early clutch with inner cover)

Clutch type	special twin plate
Plate diameter (outer plate)	10 in (25·4 cm)
Plate facing material (outer plate)	Capasco F30C
Plate thickness (new) (outer plate)	0·350 in (8·89 mm)

Plate diameter .. } inner		10 in (25·4 cm)
Plate thickness (new) } plate		0·350 in (8·89 mm)
Plate facing material }		Capasco F30C
Number of springs on pressure plate		12
Spring colour (inner)		brown
Spring pressure (at checking length)		80–85 lb (36–38 kg)
Spring checking length		2·60 in (66·04 mm)
Spring colour (outer)		brown
Spring pressure at (checking length)		120–130 lb (54–58 kg)
Spring checking length		2·60 in (66·04 mm)
Number of springs on inner cover		6
Identification		Part No. 625149
Spring pressure (at checking length)		10 lb (4·54 kg)
Spring checking length		2·25 in (57·15 mm)
Separator plate thickness		0·705–0·700 in (17·90–17·78 mm)
Cover adjusting screw clearance		0·050 in (1·270 mm)
Pedal free-play		1–1½ in (25·4–38·0 mm)

Release lever height, i.e.: Distance from the tips of the release levers to the base place face when the clutch is assembled with 0·389 in. (9·880 mm) spacers in place of the transmission plate and 912724 spacers between the cover flange and base plate. This dimension also applies when the clutch is assembled on a flywheel and fitted with 0·349 in. (8·865 mm) spacers in place of both drive plates. 3·345 in (84·96 mm)

Twin Plate Clutch — 990 (Early clutch with inner cover)

Clutch type		special twin plate
Plate diameter .. } outer		11 in (27·94 cm)
Plate facing material } plate		Mintex H19
Plate thickness (new) }		0·350 in (8·89 mm)
Plate diameter .. } inner		10 in (25·4 cm)
Plate facing material } plate		Capasco F30C
Plate thickness (new) }		0·350 in (8·89 mm)
Number of springs on pressure plate		12
Spring colour (inner)		brown
Spring pressure (checking length)		80–85 lb (36–38 kg)
Spring checking length		2·60 in (66·04 mm)
Spring colour (outer)		brown
Spring pressure (checking length)		120–130 lb (54–58 kg)
Spring checking length		2·60 in (66·04 mm)
Number of springs on inner cover		6
Identification		Part No. 625149
Spring pressure (at checking length)		10 lb (4·54 kg)
Spring checking length		2·25 in (57·15 mm)
Separator plate thickness		0·765–0·760 in (19·43–19·30 mm)
Cover adjusting screw clearance		0·050 in (1·270 mm)
Pedal free-play		1–1½ in (25·4–38·0 mm)

Release lever height, i.e.: Distance from the tips of the release levers to the base plate face when the clutch is assembled with 0·389 in. (9·880 mm) spacers in place of the transmission plate and 912724 spacers between the cover flange and base plate. This dimension also applies when the clutch is assembled on a flywheel and fitted with 0·349 in. (8·865 mm) spacers in place of both drive plates. 3·445 in (87·5 mm)

Twin Plate Clutch — 990 and 880 (Later clutch without inner cover)

Clutch type	special twin plate
Plate diameter	10 in (25·4 cm)
Plate facing material	Thermoid 11046

Plate thickness (new)	0·350 in (8·89 mm)
Number of springs on pressure plate	12
Spring colour (inner)	brown
Spring pressure (at checking length)	80–85 lb (36–38 kg)
Spring checking length	2·60 in (66·04 mm)
Spring colour (outer)	red
Spring pressure (at checking length)	140–150 lb (63–67 kg)
Spring checking length	2·60 in (66·04 mm)
Separator plate thickness – 990	0·765–0·760 in (19·44–19·30 mm)
Separator plate thickness – 880	0·705–0·700 in (17·90–17·78 mm)
Pedal free-play	1–1½ in (25·4–38·0 mm)
Release lever height, i.e.: Distance from tips of release levers to base plate face when clutch is assembled with 0·389 in. (9·880 mm) spacers in place of drive plate and 912724 spacers between cover flange and baseplate. This dimension also applies when clutch is assembled on a flywheel and fitted with 0·349 in. (8·865 mm) spacers in place of both drive plates	3·445 in (87·5 mm)

Dual Clutch (Livedrive) — 1200

Clutch type	Borg and Beck 49400
Plate type and diameter (transmission)	Borglite 11 in (27·94 cm)
Plate facing material	Capasco F30C
Plate thickness (new)	0·340 in (8·64 mm)
Plate type and diameter (PTO)	rigid 11 in (27·94 cm)
Plate facing material	Capasco F30C
Plate thickness (new)	0·324 in (8·23 mm)
Number of springs (transmission)	12
Spring colour	dark blue/light green
Spring pressure (at checking length)	130–140 lb (58–63 kg)
Spring checking length	1·69 in (42·92 mm)
Number of springs (PTO)	12
Spring colour	red
Spring pressure (at checking length)	131–140 lb (59–63 kg)
Spring checking length	1·41 in (35·81 mm)
Pedal free-play	⅞ to 1 in (22 to 25 mm)
Hand lever free-play	1⅞ to 2⅛ in (48 to 54 mm)
Release lever height, i.e.: Distance from baseplate or flywheel face to	
transmission release lever plate	5·385–5·215 in (136·78–132·46 mm)
PTO release lever plate	6·37–6·27 in (161·80–159·26 mm)

Single Clutch (Non-Livedrive) — 1200

Clutch type	Borg and Beck 12AS
Plate type and diameter	Borglite, 12 in
Plate facing material	Mintex H19
Plate thickness (new)	0·52 in (13·21 mm)
Number of springs	16
Spring colour	lavender/black
Spring pressure (at checking length)	112–122 lb (50–55 kg)
Spring checking length	1·69 in (42·92 mm)
Pedal free-play	1 in (25·4 mm)
Release lever height, i.e.: Distance from tips of release levers to flywheel face when clutch is assembled with four 0·520 in (13·2 mm) spacers in place of driven plate	2·25 in (57·15 mm)

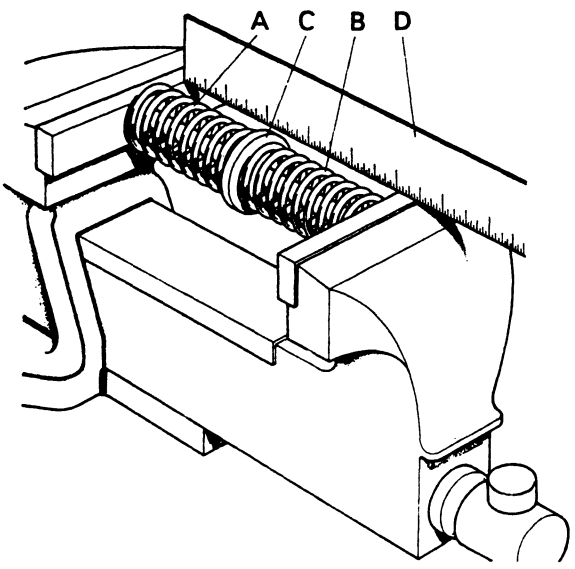

Figure 45. CHECKING THRUST SPRINGS

A. New spring B. Old spring
C. Spacer D. Rule

Checking Thrust Springs

If a spring tester is not available, springs should be checked as follows:

1. Select an average length spring from a set of *new* springs to use as a guide.
2. First compare free-length of new spring against old springs and discard any springs whose free-length is over $\frac{1}{16}$ in. (1·5 mm) shorter than the new spring.
3. Finally compare loaded length of springs by compressing the new spring and each old spring in turn, in series between vice jaws. For safety fit a 3 in. (76 mm) piece of $\frac{3}{8}$ in. (9·5 mm) diameter rod inside the springs and fit a short spacer between the spring ends. Compress springs between vice jaws until new spring is reduced to its loaded length (see data pages) then measure length of old spring. If old spring is within $\frac{1}{16}$ in. (1·5 mm) of length of new spring it is satisfactory and can be refitted but any spring whose compressed length is more than $\frac{1}{16}$ in. (1·5 mm) shorter than new spring is weak and must be discarded.

SUMMARY OF DESIGN CHANGES

Details of Change	When introduced
Power take-off clutch adjusting screws on inner cover increased from $\frac{1}{4}$ UNF to $\frac{5}{16}$ UNF. Parts, except screws and nuts, are interchangeable but if a new inner cover is used with an earlier outer cover the holes in the outer cover must be increased to $\frac{11}{16}$ in. (17·5 mm), to provide clearance for the larger adjusting screws.	AD4/47A/63792 AD3/55A/2847 AD3/49A/1929 (April 1966)
Drain hole drilled through support snouts, Part Nos. 89334 and 911906 to prevent any possibility of oil seepage past the clutch shaft bearing reaching the clutch.	990/A/484285 880/A/531626 (April 1966)
Clutch driven plate change from rigid type to Borglite. Part number of plate changed from 906854 to 915694. As the Borglite plate has 40 facing rivets and the rigid plate only 24 rivets, facings are not interchangeable.	AD4/47B/41329 (April 1966)
Width of clutch stop drum reduced from $1\frac{5}{8}$ in. to 1 in. so that on 6-speed tractors the clutch can be removed without "splitting" the tractor. Part number of the drum changed from 915582 to 917780 and these are not interchangeable unless a new clutch driveshaft is also fitted.	990/A/487807 880/A/533604 (June 1966)
Clutch driveshaft ball bearing (19201) changed to single seal type bearing. The new bearing, Part No. 620033 is interchangeable with the previous bearing and must be fitted with the sealed side towards the support snout.	990/A/487807 880/A/533604 (June 1966)
Stop bolt, Part No. 912855, fitted on left-hand fender to give positive stop for resetting-lever and prevent damage to guide bracket (913860).	880/535820 990/491847 (September 1966)
Clutch-housing locating-dowels case hardened and increased in length from $\frac{3}{4}$ to $1\frac{1}{8}$ in. (19·0 to 28·5 mm) to give more positive location of housing. Part No. of dowel changed from 35840 to 621838.	AD3/49A/4988 AD3/55A/8773 AD4/47A/72497 (January 1967)

Hole in clutch pedal, for operating starter safety switch, tapped $\frac{3}{8}$ UNC so that threaded operating peg (K920281) can be used instead of plain peg (K918618).	880/539423 990/496835 (January 1967)
Clutch-stop fork end, Part No. K916482, replaced by fork end K916481.	880/539995 990/497389 (February 1967)
Tension of PTO thrust springs increased from 41 to 53 kg (91 to 117 lb). Part number and colour marking of springs changed from K900261 (buff) to K902514 (pink). Part number of cover assembly changed from K917998 to K921273. Springs are interchangeable if fitted in sets.	AD4/47A/78292 (June 1967)
Tension of transmission thrust spring increased from 53 to 61 kg (117 to 135 lb). Part number and colour marking of springs changed from K625210 (lavender/black) to K962292 (dark blue/light green). Part number (K919860) of clutch assembly is unchanged and springs are interchangeable if fitted in sets.	AD4/55A/4665 (November 1967)
Power take-off clutch operating toggles increased in diameter. As the new toggles, which may be identified by having $\frac{3}{8}$ UNF threads, have larger eyebolts than the $\frac{5}{16}$ UNF toggles, corresponding changes to the clutch cover, pressure plate and release levers do not allow the new toggles to be fitted to earlier clutches unless all the later parts are fitted.	AD4/55A/2839 (June 1967)
Strength of clutch-pedal springs increased from 3 to 8 kg (7 to 18 lb) by increasing thickness of springs from 13 SWG to 10 SWG. Part number of springs (K921684 and K921685) and retaining pins (K921683 and K921686) unchanged.	780/600610 (December 1967)
Strength of cross shaft return spring increased by changing thickness of spring from 7 SWG to 6 SWG. Part number of spring (K921687) unchanged.	780/600745 (January 1968)
Clutch dust cover U1174 introduced to prevent build up of dust in the flywheel housing. Required only in exceptionally dry and dusty conditions.	1200 (February 1968)
Tension of transmission lever anti-rattle springs increased by changing thickness of springs from 12 SWG to 10 SWG, and lever adjusting screws changed to lighter screws with socket head. Part number of spring changed from K919863 to K923989, and number adjusting screw changed from K919864 to K923990. Parts are interchangeable but must be fitted in sets to preserve clutch balance.	AD4/55/5611 (February 1968)
Pull-off spring (K624935), hook (K916478) and anchor plate (K924167) fitted on PTO hand lever to hold lever firmly in "engaged" position and prevent unnecessary wear of release mechanism.	1200/706056 (July 1968)
Length of trunnion pin in cross shaft fork increased and six Belleville washers (K626723) fitted on pin to increase tension and hold release bearing clear of release lever plate when clutch is engaged. Part number of pin changed from K915834 to K925323.	1200/707333 (December 1968)
Power take-off release-bearing housing connected to grease channel in main frame by a nylon tube, so that release bearing is lubricated at same time as left-hand cross-shaft bearings. Part number of housing (K915837) unchanged but tapped boss incorporated for tube connection.	1200/707536 (January 1969)
Transmission release bearing changed from Part No. K19169, which has 7·9 mm ($\frac{5}{16}$ in) ball bearings, to Part No. K620112 bearing, which has 9·5 mm ($\frac{3}{8}$ in) diameter balls. Bearings are interchangeable and the K620112 bearing should be used as a replacement.	1200/708319 (March 1969)
Twin-plate clutch redesigned so that both drive plates are engaged simultaneously. Inner cover (K918606 or K918613) deleted and three springs (K625232) fitted in pressure plate so that inner driven plate is released at same time as outer plate. Earlier clutches can be changed by discarding the inner cover and fitting a new pressure plate (K962573) and three springs (K625232).	355001/22392 355005/1011 355105/1002 449005/1415 (June 1969)
Cored holes in front main frame (K915404) repositioned and clutch housing vent cover (K904246) changed to plain cover (K923650) to prevent dust entering clutch compartment.	1200/710355 (September 1969)

Slot in guide brackets (K919401 and K919402) reshaped to facilitate operation of hand-lever catch. Part numbers of brackets unchanged but care must be taken that new and old type brackets are not used on the same tractor.

1200/711248
(November 1969)

Tension of transmission thrust springs increased from 57 kg (125 lb) to 66 kg (145 lb). Part number and colour marking of springs changed from K902512 (brown) to K928922 (red). Springs are interchangeable if fitted in sets

449001/19735
(April 1970)

Transmission lever pivot pin increased in length from 6·5 to 8 mm ($\frac{1}{4}$ to $\frac{5}{16}$ in). Release levers strengthened, part number changed from K919851 to K962808. Wider thrust pads on release lever plate drilled and fitted with spring steel pins. Rat trap springs replace leaf springs on release lever plate. Transmission spring changed from K625231 (dark blue/light green) to K625262 (violet/black) and strength increased from 61 to 68 kg (135 to 150 lb). Parts not interchangeable.

AD4/55A/15122
(September 1970)

Groove machined on the 12 speed gearbox driveshaft and at the support snout steady bearing position and 'O' ring K15535 fitted.

990/824197
880/560763
4600/900497
U1074/1099
(February 1971)

Clutch release lever adjusting screw repositioned centrally on the thrust button.

455001/17909
455021/1205
455031/15037
(August 1971)

TRANSMISSION RELEASE LEVER IDENTIFICATION (1200)

Stamped	*DB Part Number*	*Set of three*	*Description*
49405	K919581	Use K962979	Release lever narrow → E15122
55118	K962808		Release lever wide E15122 →
55568	K962948	K962979	Release lever wide later models

Length of PTO release lever adjusting screws increased by 5 mm ($\frac{3}{16}$ in) to provide more adjustment during bedding in of clutch. Part number of screws changed from K962536 to K962994.

355001/33058
(December 1971)

Height of clutch stop boss changed from 32 to 24 mm ($1\frac{1}{4}$ to $\frac{15}{16}$ in) to ensure that adequate clutch adjustment is present at all times.

885/620406
885N/646022
885G/651001
(May 1972)

Clutch release lever springs changed from K962539 (12SWG) to K963598 (3·175 mm; 0·125 in). The number of coils at the spring eye reduced from $2\frac{1}{2}$ to $1\frac{1}{2}$ turns. Spring part number changed from K962539 to K963598.

355011/14364
349001/10543
(April 1972)

Suffix letters "L" for Laycock and "B" for Borg and Beck are stamped on engine blocks after engine numbers to eliminate special engine numbers denoting type of clutch.

(August 1972)

The PTO stage clearance changed from 1·45 mm to 1·22 mm (0·057 in to 0·048 in) at the adjusting screw when checked at the flywheel The pedal clearance from the footplate should be 190 to 230 mm ($7\frac{1}{2}$ to 9 in).

355011/27212
355022/3368
349101/1628
(December 1972)

The Livedrive clutch driveshaft support bearing changed from one to two neoprene seals to prevent oil leaks.

January 1973

Laycock clutch drive plates changed from F30C facing to a Thermoid facing. Transmission driveplate part number changed from K926850 to K942291.

355011/18917
349101/1726
(March 1973)

Laycock 10/10 in double clutch release lever mechanism fitted with a one piece roller instead of the former roller and pin.

(June 1974)

Transmission

TRANSMISSION

990, 880 AND 770 SELECTAMATIC TRACTORS

CASE CORPORATION

Pub 9-38115

PRINTED IN U.S.A.

CONTENTS

Section	Page
Gearbox — 880 and 990 tractors	1
Gearbox — 770 tractors	11
Differential	17
Reduction Units	21
Brakes	28
Dimensional Data	34
Summary of Design Changes	35

GEARBOX — 880 AND 990 TRACTORS
Six-Speed and Twelve-Speed Models

The gearbox is of open construction, being formed by two cast iron end-plates secured together by four steel spacer bars. The end-plates house the bearings, which in turn carry the shafts and gears. On Livedrive tractors the gearbox driveshaft is hollow, permitting the power take-off driveshaft to pass through the gearbox to the rear-mounted power take-off and hydraulic lift pump.

The gears are straight-toothed spur gears and are carried on splined shafts to permit movement for gear engagement. The crown-wheel pinion is integral with the gearbox output-shaft and allows the bevel-pinion-type differential to be supported on the gearbox rear end-plate, thus making a compact unit which can be fully assembled before being mounted in the tractor frame.

The six-speed gearbox is, in effect, two three-speed boxes: a high-range gearbox and a low-range gearbox. The selection of the range in use is determined by the position of the range gear-lever, which causes the layshaft to be driven at high or low speed as required.

Three forward speeds and one reverse are available in each range, the required speed being selected by means of the main gear-lever which slides the gears on the pinion shaft so that they mesh with the appropriate gear on the layshaft. Reverse gear is obtained by interposing an idler gear, positioned on the driveshaft between the pinion shaft and layshaft, thus reversing the direction of rotation of the pinion shaft. When either the main or range gear-lever is in

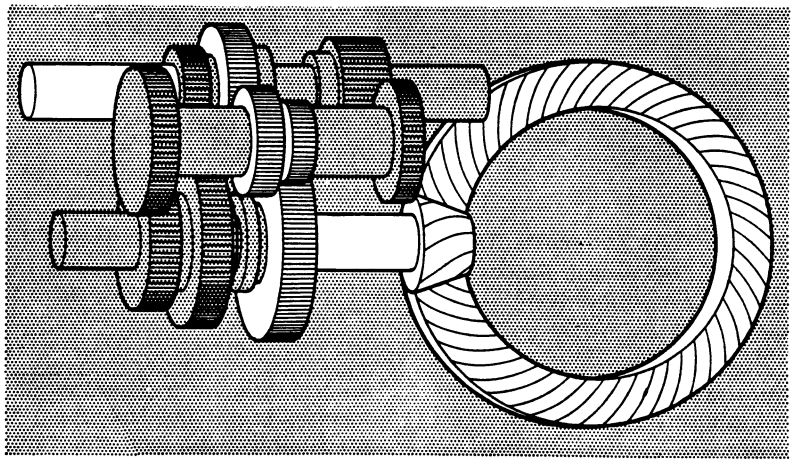

Figure 1. GEAR TRAIN: First Gear — High Ratio

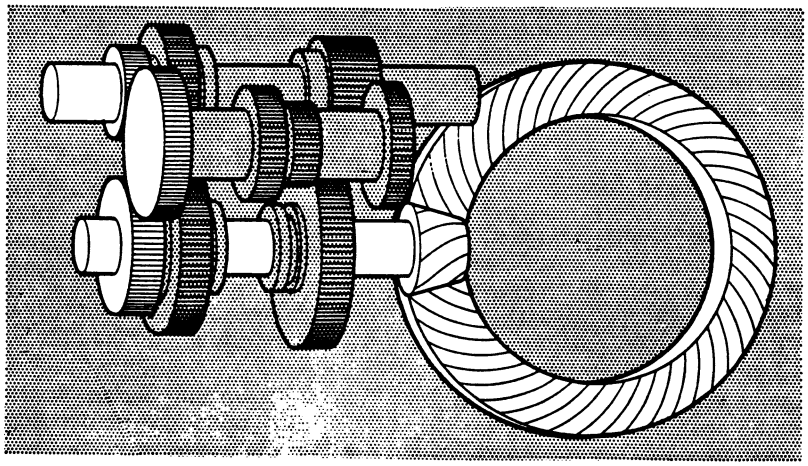

Figure 2. GEAR TRAIN: Top Gear — Low Ratio

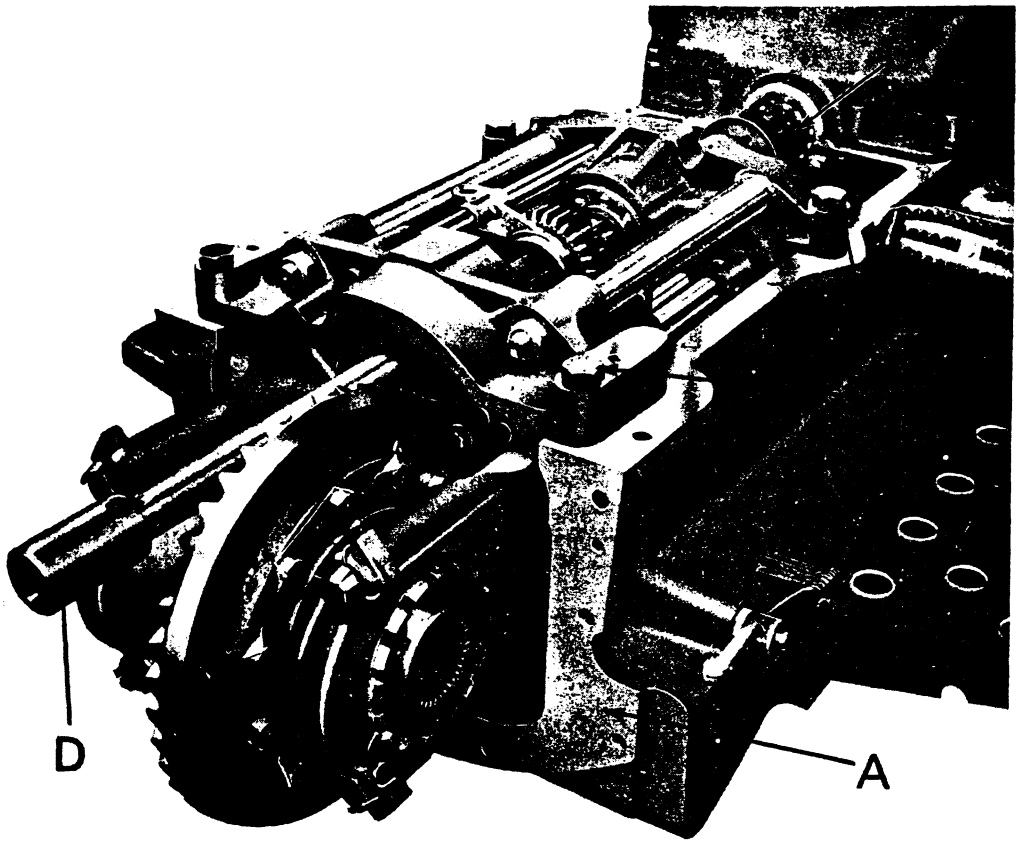

Figure 3. TRACTOR WITH REAR AXLE CASE AND GEARBOX REMOVED

A. Tractor main frame
B. Gearbox mounting bolts
C. Clutch driveshaft
D. P.T.O cardan shaft

the neutral position, the gears are not engaged and no drive is transmitted through the gearbox.

The twelve-speed gearbox is an alternative fitting to the six-speed unit and consists of a six-speed gearbox with an auxiliary reduction gear mounted on the front end-plate. The auxiliary gear may be engaged, or disengaged, by means of an additional gear-lever and when engaged reduces all gear ratios by approximately 40%, thus giving the very low travelling speeds required for certain operations. When the auxiliary gear is disengaged the gearbox becomes, in effect, a normal six-speed gearbox with the same gear ratios as a six-speed model.

Removing the Gearbox Unit

Before starting to strip the tractor for gearbox removal, thoroughly clean the gearbox cover, rear-axle case top and power take-off case to prevent any possibility of dirt entering the main frame and subsequently damaging the hydraulic system.

The gearbox unit and differential assembly may be removed as a complete unit and the most convenient method of doing this depends on the tractor type.

All Selectamatic Livedrive tractors are fitted with a band-type clutch-stop and on early models this prevented the muff coupling from being slid far enough forward to clear the gearbox driveshaft. This means that the gearbox must, therefore, be removed by "splitting" the rear axle from the main frame. On later models the width of the clutch-stop drum was reduced to allow the gearbox to be removed forwards after taking off the gearbox cover.

As twelve-speed tractors are not fitted with a muff coupling, the input gear being mounted direct on the clutch driveshaft, the gearbox cannot be removed forwards and must, therefore, be withdrawn rearwards.

Gearbox removal methods for different tractor types are as follows:

1. **Livedrive Six-Speed Tractors:**
   To Serial Numbers 990A/487806
   880A/533604
   Remove the gearbox rearwards after splitting the rear axle from the main frame (Method A).
2. **Livedrive Six-Speed Tractors:**
   From Serial Numbers 990A/487807 onwards
   880A/533605 onwards
   Remove the gearbox forwards after taking off the gearbox cover (Method B).
3. **Livedrive Twelve-Speed Tractors:**
   Remove gearbox rearwards after splitting the rear axle from the main frame (Method A).

4. **Non-Livedrive Six-Speed Tractors:** Remove the gearbox forwards after taking off the gearbox cover (Method B).

Removing Gearbox Rearwards (Method A)

1. Disconnect steering drop-arm and throttle linkage.
2. On 990 tractors only: Remove hand-throttle lever and steering-box to obtain access to the bolt beneath steering-box which passes through the spacer wedge and into the clutch housing.
3. Remove all gearbox-cover fixing bolts (five through the rear axle) and lift cover off main frame. On 880 tractors the gearbox cover and steering-box can be removed as a unit.
4. Disconnect and remove gearbox lubrication pipes and drain transmission oil.
5. Remove drawbar frame and the lift linkage; jack up the tractor, supporting it firmly under rear main frame.
6. Remove both rear wheels and reduction units. A trolley-jack or portable crane is useful to support the weight of the reductions. As the brake drums may bind on the brake shoes it is advisable to slacken off the brake-rod adjusting nuts before removing the reduction units.
7. Remove oil-seal housing from right-hand side of axle case in order that a hand may be inserted into the case to extract the differential-lock sleeve and spring. As the spring may have expanded and trapped the sleeve in the case, it will probably be necessary to manipulate the differential-lock pedal whilst positioning the sleeve for extraction. It is not necessary to completely remove the sleeve and spring from axle case; all that is required is for the sleeve and spring to be clear of the differential.
8. Remove transmission sump cover-plate and withdraw filter unit. Disconnect sensing unit cable and remove power take-off unit. Remove the four bolts attaching the oil inlet pipe to the base of hydraulic pump.
9. Disconnect brake linkage.
10. Withdraw PTO cardan shaft and remove the mudguards from the footplates.
11. Place a trolley-jack under axle case and, whilst holding axle case vertical, remove the cap screws attaching axle to main frame. Ease the casing off the dowels and carefully withdraw it from main frame.
12. Remove the four gearbox mounting bolts and remove gearbox by sliding rearwards out of main frame.
13. On twelve-speed models the drive-gear thrust washer will be released as gearbox is withdrawn from clutch shaft. Remove this washer from main frame and retain until required for re-assembly. On the six-speed models retain the muff-coupling end-float adjusting shims until required for replacement.

Replacing the Gearbox (Method A)

1. Ensure that the inside of main frame is clean, then slide gearbox into position. On twelve-speed gearboxes a thrust washer is fitted between the drive gear and end-cap and, as this washer is not retained in position until the clutch shaft is inserted into the gear, the washer should be smeared with grease before fitting and care taken to ensure that it is not displaced as the clutch shaft enters the gear. On six-speed gearboxes fit the muff-coupling end-float adjusting shims in place before positioning the gearbox.
2. Temporarily fit the four mounting bolts without bushes and tighten so that the end-plates are clamped to the main frame. Release the four Nyloc nuts on the front ends of spacer bars and, after giving the end of each spacer bar a few taps with a soft-faced hammer to allow the bars to align themselves in the clearance holes in the end-plate, retighten the nuts to 70 lb ft (9·67 kg metres). Remove the mounting bolts, fit the bushes into end-plates and replace the bolts, tightening to 100 lb ft (13·83 kg metres). The mounting bushes are a clearance fit in the end-plates so that when the bolts are fully tightened the gearbox is not clamped rigidly to the frame but has a limited amount of vertical and horizontal "float". On six-speed models check the muff-coupling end-float: 0·010–0·040 in. (0·25–1·0 mm). Adjust, if necessary, by changing the thickness of the shims on the end of the gearbox input shaft.
3. Wipe the axle and main frame faces clean and lift the axle assembly on a trolley-jack. Slide the axle into position on the dowels, guiding the oil inlet pipe into position at the same time. Refit the cap screws and nuts, tightening to 55 lb ft (7·60 kg metres).
4. Slide PTO cardan shaft through gearbox and into clutch. Insert the shaft carefully so as not to damage the oil seal. On six-speed gearboxes this seal is a felt ring inside the end of the clutch shaft, and if the cardan shaft is turned whilst the splines are in contact with the ring, the ring may be damaged or displaced. If difficulty is experienced entering the shaft into clutch, fully depress clutch pedal to free the driven plate, and turn the shaft as it is pushed home.
5. After ensuring that the 'O' ring is in position on the pipe flange, replace the bolts attaching the pipe to the base of the hydraulic pump. Refit the power take-off unit and reconnect the brake linkage.
6. Push differential-lock spring into differential gear and push sleeve against the spring. Insert the special tool (Fig. 4) into axle case and against the sleeve. Push sleeve against spring until the splines on the sleeve start to enter the differential gear, then turn the tool to engage

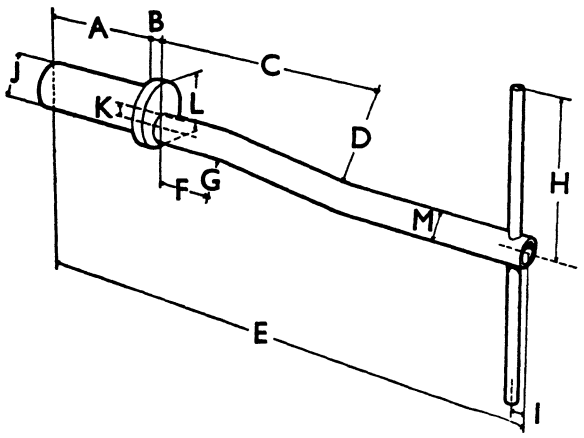

Figure 4. TOOL FOR REPLACING DIFFERENTIAL LOCK SLEEVE

A.	4½ in. (10·79 cm)	B.	½ in. (1·27 cm)
C.	6½ in. (16·51 cm)	D.	4 in. (10·16 cm)
E.	19½ in. (48·89 cm)	F.	1½ in. (3·81 cm)
G.	4 in. (10·16 cm)	H.	9 in. (22·86 cm)
I.	½ in. (1·27 cm)	J.	1½ in. (3·81 cm)
K.	½ in. (1·27 cm)	L.	2½ in. (5·71 cm)

M. 1 in. (2·54 cm)

the pedal fork into sleeve groove. If the pedal is then held in the "engaged" position the spring will be retained in the compressed position and permit the reduction unit to be refitted.

7. Examine axle case oil seals; if they are not in good condition they should be renewed. New seals should be fitted with the seal lips towards the centre of the tractor and the space between the seals packed with high-melting-point grease. Replace right-hand oil-seal housing, smearing the outside of housing with jointing compound before pressing it into axle case.
8. Ensure that axle-case faces are clean and the brake shoes in good condition. Smear the inside of axle oil seals with grease and refit reduction units, taking care not to damage the seals. Degrease the bolt and stud threads and smear with Loctite before replacing and tightening to 75 lb ft (10·5 kg metres).
9. Fit rear wheels and adjust brakes. Jack up the tractor and remove supports from under main frame.
10. Replace gearbox lubrication pipes and refit gearbox cover, using new gaskets. Check that gear levers are correctly located in their selectors before fitting the cover bolts. When the cover is in position tighten the cover-to-main-frame bolts only sufficient to hold the cover down on to the main frame, then fully tighten the bolts through the axle case. Finally tighten the cover down on to main frame.
11. On 990 tractors only: Place the spacing wedge in the gap between gearbox cover and clutch cover. If wedge is not tight in the gap add shims until the wedge is so tight it has to be driven in with a copper hammer. When the bolts are tightened the housing and cover will then be bolted solidly together without being distorted. Fill steering-box oil bath to within half-an-inch (12 mm) of cover face and fit steering-box and column. Note that the long bolts through the front of box will have to be inserted in the box holes before box is placed in position. Replace hand throttle lever.
12. Replace steering-box drop arm, noting that the dot on arm is opposite chisel mark across end of shaft. Reconnect throttle control linkage.
13. Replace drawbar frame and refill transmission with correct grade of lubricant. Adjust sensing unit cable (see Page 20, Hydraulic Section).

Removing the Gearbox Forwards (Method B)

1. Carry out operations 1 to 7 as listed in Method A.
2. Release circlip locating muff-coupling and slide coupling forwards. On Livedrive models also release the circlips locating clutch-stop brake drum. The brake drum can now be pushed fully forward on the clutch shaft, so allowing the muff coupling to be moved forward until it is clear of gearbox driveshaft. Retain the end-float adjusting shims until required for replacement.
3. On Livedrive models remove PTO housing and withdraw cardan shaft. Remove the bolts attaching support snout to main frame and remove the two figure-of-eight clips from clutch fork. After removing the bolts attaching clutch cover to flywheel, remove clutch assembly complete with driveshaft, support snout and muff coupling.
4. Remove the four gearbox mounting bolts then remove the gearbox by lifting forwards and upwards.

Replacing Gearbox (Method B)

1. Clean inside of main frame and lower gearbox into position, sliding rearwards. Temporarily fit the four mounting bolts without bushes and tighten so that end-plates are clamped to main frame. Release the four Nyloc nuts on front ends of spacer bars and after giving the end of each spacer bar a few taps with a copper hammer, to allow the bars to align themselves in the clearance holes in end-plate, retighten the nuts to 70 lb ft (9·67 kg metres). Remove the mounting bolts, fit bushes and replace the bolts, tightening to 100 lb ft (13·83 kg metres). The mounting bushes are a clearance fit in the end-plates so that when the bolts are fully tightened the gearbox is not held rigidly to the main frame but has a limited amount of vertical and horizontal "float".
2. Replace the clutch assembly in the reverse order of removal (see Page 18 of Clutch Section).
3. Replace muff-coupling end-float adjusting

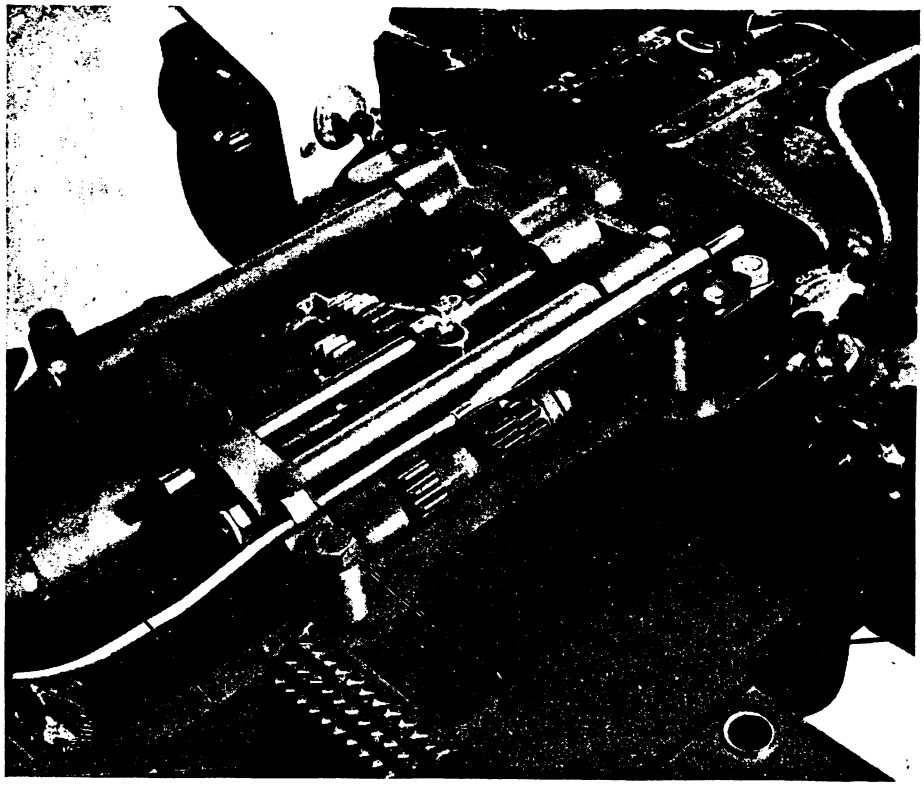

Figure 5. TRACTOR STRIPPED FOR GEARBOX REMOVAL
A. Gearbox mounting bolts B. Lubrication pipe C. Muff coupling

shims on gearbox driveshaft and slide muff coupling into position. Fit retaining circlip and check that end-float is 0·010–0·040 in. (0·25–1·0 mm). If not, adjust as necessary by changing the thickness of shims on gearbox input shaft. On Livedrive models, also slide clutch-stop drum back into position, fit the locating circlips then adjust the clearance of clutch-stop brake band and set the length of the compression spring (see Page 15 of the Clutch Section).

4. On Livedrive models slide the PTO cardan shaft through gearbox, taking care not to damage the felt ring in clutch shaft. Replace PTO unit.
5. Continue the replacement by carrying out operations 6 to 13 as given in Method A.

Dismantling the Gearbox

As the gearbox and differential is a rather cumbersome and heavy assembly, a support stand will assist dismantling and assembly operations. A suitable stand can often be fabricated from scrap materials, a typical example being shown in Fig. 6. Only the dimensions that are shown are important and it should be noted that the two support points for the front end-plate must be in line with the two rear supports, in order to maintain the end-plates in alignment during assembly.

On twelve-speed gearboxes commence dismantling by removing the gear housing from the front end-plate; this is secured by three of the spacer-bar nuts and may be drawn off the dowels, complete with gears and selector, after the nuts have been removed. When the gear housing has been removed place it in a vice and remove the selector shaft by pushing it out towards the rear, then withdraw the selector and clutch member: note that when the selector rod is withdrawn out of the selector the detent spring and ball inside the selector will be released. Remove layshaft nut then place the housing on bed of a press and press layshaft out of gear and bearing. Remove the three cover screws and withdraw drive gear; if spacer washers were fitted between end-cover and gear housing retain these for refitting during assembly.

Remove nut from end of pinion shaft (this is left-hand thread) and remove the bolts attaching bearing housing to end-plate. Draw the pinion-bearing housing from the end-plate by screwing two $\frac{3}{8}$ UNC bolts into the tapped holes in the housing flange and tapping the end of pinion, to prevent it being drawn out with the housing. When the housing has been removed, replace inner track of the thrust race on the pinion, ensuring that the distance piece and shims have not been disturbed; refit the pinion nut. The shims fitted between housing and end-plate should be retained for use during assembly as these control the meshing of the crown-wheel and pinion.

With the four spacer-bar nuts removed, engage reverse gear by levering the selector rearwards, then gently tap the end-plate forward with a soft-faced hammer. Allow the 2nd/3rd selector rod to move with the end-plate but do not allow the 1st/reverse rod to

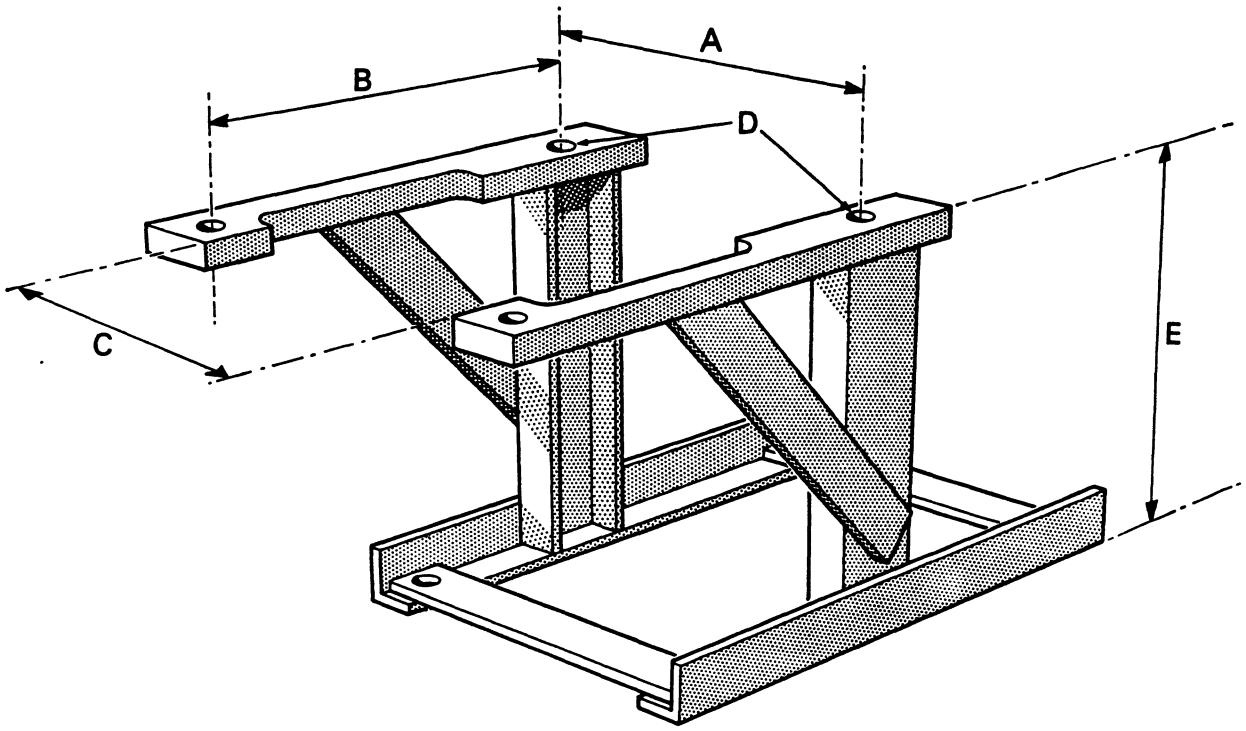

Figure 6. GEARBOX SUPPORT STAND

A. 12⅝ in. (32·06 cm) B. 13⅜ in. (35·08 cm) C. 11⅝ in. (29·52 cm)
D. ⅝ BSF tapped holes E. 12 in. (30·48 cm)

Note: In order to support the end-plates in correct alignment it is essential that the two side supports are correctly aligned

move out of gear. Withdraw end-plate until reverse selector rod is clear of its detent ball; it will then also be clear of the interlocking plunger and allow the end-plate to be withdrawn and the selector rods and gears to remain. As the end-plate is withdrawn the layshaft can be removed.

When the end-plate has been removed turn it upside down and tap it on the bench to remove the three detent springs; remove the interlocking plunger from side of plate in a similar manner.

Remove pinion shaft, complete with gears and thrust-bearing tracks, withdrawing the selector forks and rods at the same time. Remove driveshaft by tapping forwards with a soft-faced hammer, taking care of the shims fitted behind the rear bearing if a twelve-speed box; on six-speed boxes these shims are fitted behind the front bearing.

Make suitable marks on the differential-bearing caps, so that the caps can be replaced in their original position, then remove the four cap bolts and lift the differential assembly from end-plate. If an oil scraper is mounted on the end-plate, remove this to avoid possible damage.

The main driveshaft also carries the reverse idler gear and this may be removed by supporting the gear on the bed of a press and pressing the shaft out of the gear and rear bearing; the gear carrier bush can be left on the shaft if it is kept clear of the press support. Note that the thrust washer at rear of bearing is locked to the carrier by means of a small dowel pin.

The pinion-shaft gears will be prevented from sliding off the splines by the thrust-bearing inner races and may be removed by placing the gears on a press and pressing the pinion out of the bearing tracks. When the bearing tracks are removed from the pinion, place these with the distance piece and shims and retain until required for assembly.

To strip the differential, unlock the tabwashers and remove the differential-casing cover bolts, mark the position of the cover and case, then lift the cover off the dowels. Remove one of the split pins, or circlips, from the end of the differential pin then tap the pin out of the casing to release the pinions.

Assembling the Gearbox

After cleaning all components examine the gears for chipped or worn teeth and check the bearings for any signs of roughness. If the pinion-roller bearings are to be renewed, fit the new outer tracks supplied with the new bearings. The outer track of the pinion

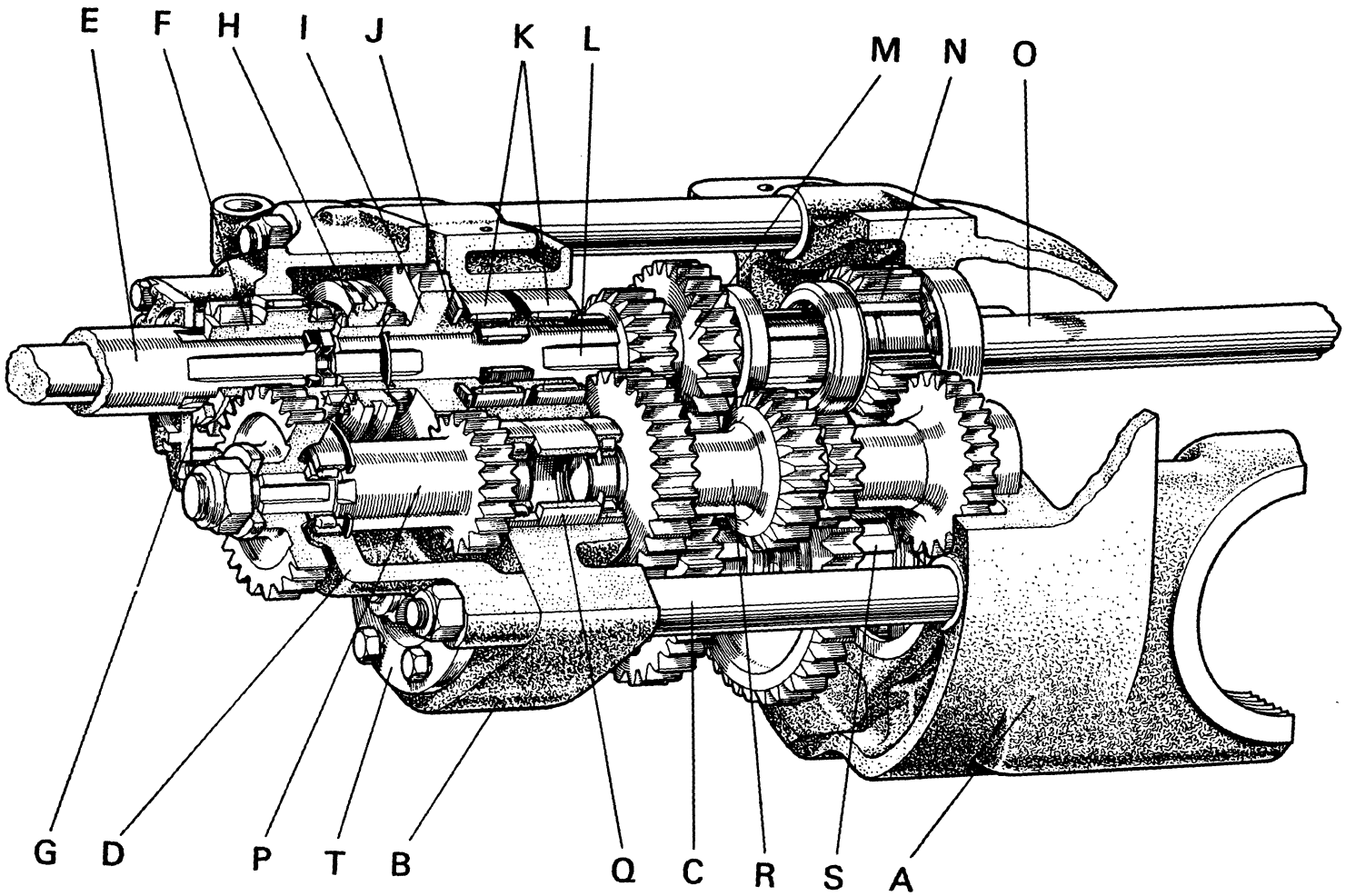

Figure 7. TWELVE-SPEED GEARBOX — 880/990 TRACTORS

A. Rear end-plate
B. Front end-plate
C. Spacer bar
D. Housing — creeper gear
E. Clutch driveshaft
F. Driving gear
G. Thrust washer
H. Sliding dog-clutch
I. Driven gear
J. Thrust washer
K. Needle roller bearings
L. Driveshaft
M. Range pinion
N. Reverse idler gear
O. PTO cardan shaft
P. Creeper layshaft
Q. Distance piece
R. Main layshaft
S. Pinion shaft
T. Housing — pinion bearings

rear race is secured in rear end-plate by means of a bolt and two special washers; if this bolt is removed ensure that it is replaced with the bolt head on rear (differential side) of end-plate, otherwise the bolt may foul the crown-wheel. Tighten the nut to 9 lb ft (1·3 kg metres).

The two lower spacer bars are screwed (right-hand thread) into the rear end-plate and do not normally require removing; if, however, the bars are removed the threads should be smeared with Loctite sealant (Part No. 960998) after degreasing and treating with Locquic primer (Part No. 961673), then screwed into the end-plate and firmly tightened.

Torrington needle-roller bearings are employed in a number of places in the twelve-speed gearbox.

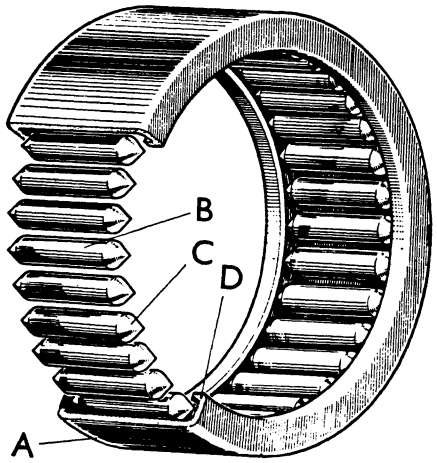

Figure 8. NEEDLE ROLLER BEARING

A. Steel shell
B. Needle roller
C. Roller chamfer
D. Shell lip

These bearings consist of a number of small diameter needle rollers housed inside a thin steel shell. The ends of the rollers are chamfered and the ends of the shell lipped inwards so that they pass round the roller chamfers and retain the rollers in position. It is, therefore, important that no undue force is applied to the bearings as this may distort the shell lip and jam the rollers.

Once fitted, needle-roller bearings should not be removed unless they are to be renewed, and when fitting new bearings these must be pressed in, using a special tool to protect the shell lip from damage. The stamped end of bearing should be placed against the tool, the bearing placed squarely in position and then pressed in. Under no circumstances should the bearing be driven or hammered in, even when using the special tool. Use of the special tool will also ensure that the bearings are pressed in to the correct depth.

Place the pinion shaft in a vice, fitted with soft-jaw grips, and temporarily assemble the thrust bearings and housing. Tighten the Nyloc nut on end of pinion to 200 lb ft (27·6 kg metres) then check the bearing clearance; this should be 0·002–0·004 in. (0·051–0·102 mm) and shims should be added, or

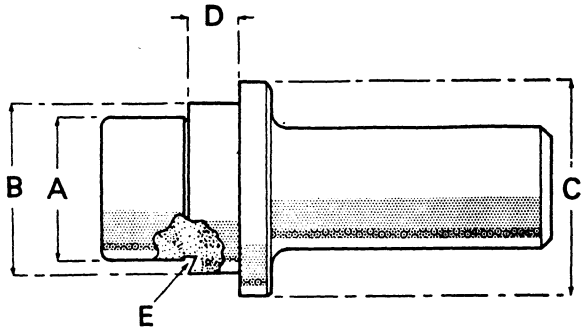

Figure 9. TOOL FOR FITTING 620053 NEEDLE ROLLER BEARING

A. Diameter 1·749 in. (44·427 mm)
B. Diameter $2\frac{1}{16}$ in. (52·4 mm)
C. Diameter $2\frac{5}{8}$ in. (66·7 mm)
D. Recess $\frac{5}{8}$ in. (15·87 mm)
E. Chamfer 15°

removed, until this clearance is obtained. When sufficient shims have been fitted so that the required bearing clearance is obtained, remove the nut and draw the complete bearing assembly off the pinion and retain in a safe place until required for assembly.

Fit the 1st/reverse gear on to pinion shaft, positioned with the selector groove towards thrust bearing (front) end, followed by 2nd/3rd gear with its selector groove towards the teeth (rear) end. Insert pinion into roller-bearing track in rear end-plate.

On twelve-speed gearboxes a bush is fitted inside the front end of driveshaft. This bush is a steady bearing for the power take-off cardan shaft and the recess in the bush should be packed with high-melting-point grease before assembly.

Press reverse-gear carrier bush on to driveshaft until it contacts the circlip. Smear the inside of gear

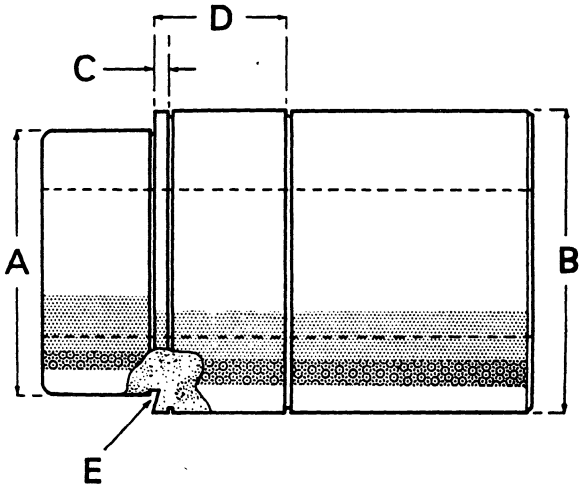

Figure 10. TOOL FOR FITTING 620052 NEEDLE ROLLER BEARING

A. Diameter 2·623 in. (66·62 mm)
B. Diameter $2\frac{15}{16}$ in. (74·6 mm)
C. Location $\frac{5}{32}$ in. (3·97 mm)
D. Location $1\frac{5}{16}$ in. (33·3 mm)
E. Chamfer 15°

bush with anti-scuffing paste and slide the gear on to carrier, chamfered edge of teeth towards front of shaft. Fit the thrust washer, locking this to carrier bush by fitting the pin through the holes in thrust washer and carrier, followed by the rear bearing. Press rear bearing on to shaft until the thrust washer and carrier bush are pushed against the circlip, then check that the gear can be turned quite freely. Slide range pinion on to driveshaft, selector groove towards the rear, and, if a six-speed box, replace the front bearing and circlip, fitting circlip first and then pressing the bearing on the shaft until it contacts circlip. Replace shaft in position in the rear end-plate, noting that on twelve-speed boxes shims are fitted between rear bearing and end-plate.

Replace layshaft shims in the bearing location in front end-plate. On the twelve-speed gearbox check that distance piece which is fitted between the outer races of main and creeper-gear layshaft is held in position by the locating screw in the side of end plate. On six-speed gearboxes also replace drive-shaft-bearing shims before sliding end-plates on to spacer bars. Guide the bearings into position when fitting the end-plate, taking care that the races do

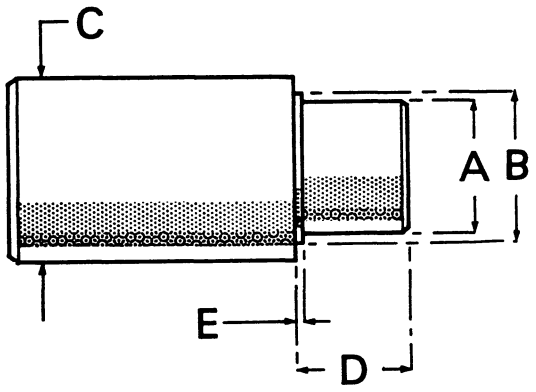

Figure 11. TOOL FOR FITTING DRIVESHAFT BUSH (TWELVE-SPEED)

A. Diameter 1·129 in. (28·676 mm)
B. Diameter 1¼ in. (31·7 mm)
C. Diameter 1⅝ in. (41·3 mm)
D. Recess ⅞ in. (22·2 mm)
E. Recess $\frac{1}{16}$ in. (1·6 mm)

not bind in the housing; when end-plate is in position fit spacer-bar nuts to hold end-plate firmly in position.

On twelve-speed boxes three of the spacer bars are extended for attaching the gear housing and in order to clamp end-plate firmly in position three distance pieces, 1⅝ in. (41 mm) long, should be fitted so that the nuts can be tightened and the end-plate clamped firmly in position.

With the spacer-bar nuts tightened to hold end-plate firmly in position, check the layshaft end-float. (When checking the layshaft end-float the shaft must be freely spun to centralise the taper rollers within their cones, axial pressure should be applied with a backward and forward rotational movement to fully seat the bearing rollers and eliminate any residual clearance before taking a dial gauge reading. Pressure should be applied in a similar manner in the opposite direction to obtain the total existing end-float and determine the shims required.) The required end-float is 0·002—0·004 in. (0·051—0·0102 mm), and is controlled by the thickness of the front bearing shims. If only two 0·010 in. (0·254 mm) shims are fitted initially the thickness of the additional shims required may be found by measuring the end-float with a dial gauge and subtracting 0·003 in. (0·076 mm) from the gauge reading.

On six-speed gearboxes the driveshaft end-float should be 0·006–0·010 in. (0·152–0·254 mm), and this is determined by the thickness of shims fitted between the front bearing and end-plate.

On twelve-speed gearboxes the driveshaft shims are fitted between the rear bearings and end-plate. To check if sufficient shims have been used, fit driven pinion on to driveshaft, noting that the needle-roller bearing inside the gear is in good condition and placing the thrust washer on the gear so that the oil groove is against end-plate. The thrust washer faces should be smeared with anti-scuffing paste. When the gear is in position fit the circlip on to driveshaft and temporarily fit inner clutch member. With front end-plate clamped in position, push the inner clutch member against drive gear whilst inserting a feeler gauge between thrust washer and end-plate. With clutch member pressed against circlip, as described, the thrust washer should have 0·015 in. (0·381 mm) clearance and may be adjusted by adding, or removing, shims between the rear bearing and end-plate.

When the shaft end-floats have been correctly adjusted, continue the assembly by assembling the pinion thrust bearing. Place an inner track on the pinion, noting that on twelve-speed gearboxes a distance washer is fitted between the inner race and pinion; replace the bearing housing, distance piece, shims and the second inner race. Ensure that the shims selected when the pinion-bearing clearance was set previously are refitted as removed, and that the pinion-meshing shims fitted between the housing and end-plate are refitted as originally installed. Replace the bearing-housing bolts, tightening to 30 lb ft (4·1 kg metres). Fit the flat washer on to the pinion, replace the Nyloc nut and tighten to 200 lb ft (27·6 kg metres). Sliding two gears into engagement simultaneously will lock the pinion shaft and facilitate tightening the nut.

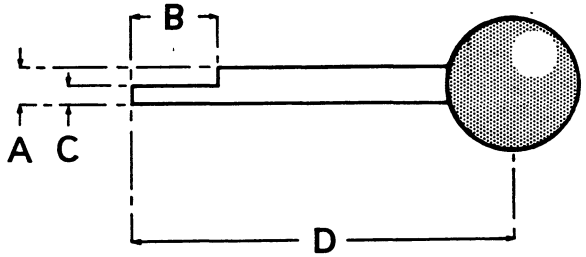

Figure 12. TOOL FOR COMPRESSING DETENT SPRINGS

A. ⅜ in. (9·5 mm)
B. ⅝ in. (15·9 mm)
C. $\frac{3}{16}$ in. (4·8 mm)
D. 6 in. (150 mm)
E. Gear lever knob

Remove the Mills pin securing High/Low range selector on to its rod; slide selector off its rod and enter rear end of selector rod into the front end-plate. Insert detent spring into the hole in front end-plate followed by the plunger, domed end upwards. Compress the detent spring by pushing the plunger down with a suitable tool (Fig. 12) until the end of the selector rod rides on to the plunger and enables the tool to be withdrawn. Position the selector fork in the gear groove and push the selector rod through the selector until the pin-holes are in line and a new Mills pin fitted.

Remove the 1st/reverse selector from its selector rod and fit rod into end-plate, holding the detent ball down in the same manner as the plunger on high/low range rod. When the new Mills pin has been fitted, place selector rod in the neutral position and place gear interlocking plunger in the horizontal hole in end-plate. The 2nd/3rd selector rod can then be fitted in the same manner as the other rods.

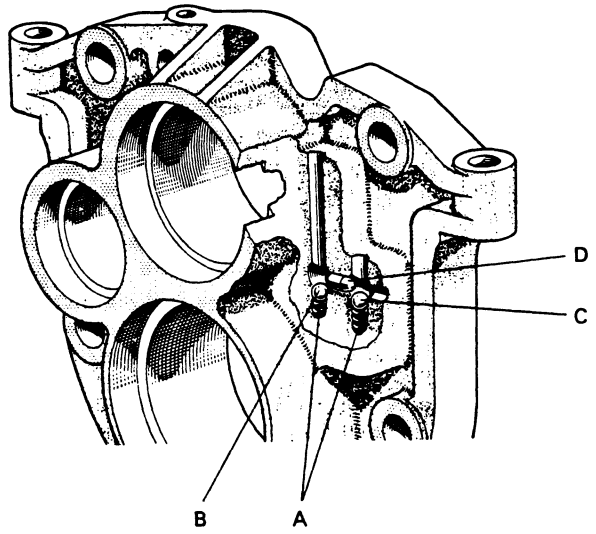

Figure 13. GEARBOX FRONT END-PLATE

A. Detent springs B. Detent ball (1st/reverse gear)
C. Detent ball (2nd/3rd gear) D. Interlocking plunger

Press the outer tracks of creeper-gear layshaft bearings into the housing and front end-plate, replacing the shims fitted between end-plate and bearing track. Press the inner tracks of thrust races on to ends of creeper-gear layshaft. Fit selector in position and fit selector rod through from the rear of housing, holding the detent ball down against spring until selector rod passes over the ball.

Place outer clutch member into selector fork then place inner clutch member inside outer clutch member. Refit creeper-gear housing on to spacer bars, entering the creeper-gear layshaft bearings into the outer bearing tracks and sliding inner clutch member on to the driveshaft splines at the same time. When the housing is located on the dowels, fit the four spacer-bar nuts and tighten to 70 lb ft (9·67 kg metres). Check creeper-gear layshaft end-float. This should be 0·001–0·003 in (0·025–0·076 mm) and is controlled by the thickness of shims fitted between end-plate and bearing track.

Ensure that the oil seal and 'O' ring inside the driving gear are in good condition before fitting gear into housing. If oil seal is replaced note that seal should be fitted with lip towards front and is pressed into the gear until seal face is 0·050–0·060 in.

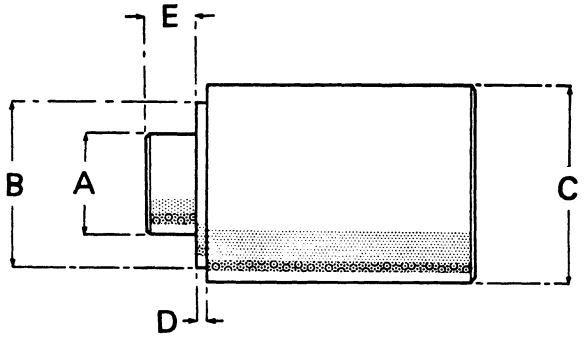

Figure 14. TOOL FOR FITTING DRIVING GEAR OIL SEAL (TWELVE-SPEED)

A. Diameter $1\frac{1}{8}$ in. (28·6 mm)
B. Diameter $1\frac{7}{8}$ in. (47·6 mm)
C. Diameter $2\frac{1}{4}$ in. (57·1 mm)
D. Recess $\frac{1}{16}$ in. (1·6 mm)
E. Recess $\frac{1}{2}$ in. (12·7 mm)

(1·3–1·5 mm) below the gear end-face (Fig. 14). After fitting drive gear replace front cover, replacing any distance washers originally fitted between end-cover and gear housing. Check thrust washer clearance by placing the thrust washer in position and inserting a feeler gauge. After checking that thrust washer has not less than 0·015 in. (0·381 mm) clearance, remove the thrust washer and wire it to front cover.

Fit driving gear on to creeper-gear layshaft, replace the large, flat washer and tighten the nut to 150 lb ft (20·7 kg metres).

GEARBOX — 770 TRACTORS

The gearbox is of open construction being formed by two cast iron end-plates attached together by four steel spacer bars. The end-plates house the bearings, which in turn carry the shafts and gears. The gears are straight-toothed spur gears and are carried on splined shafts to permit movement for gear engagement.

The crown-wheel pinion is integral with the gearbox output shaft and allows the bevel-pinion-type differential to be supported on gearbox rear end-plate, thus making a compact unit which can be fully assembled before being mounted in the tractor.

The gearbox has four ranges, each range having three forward speeds and one reverse speed, giving a choice of twelve forward speeds and four reverse speeds. The speeds are selected by the main gear lever, which slides the gears on the pinion shaft so that they mesh with the appropriate gear on layshaft. Reverse gear is obtained by interposing an idler gear, positioned on the driveshaft between the layshaft and pinion shaft, thus reversing the direction of rotation of the pinion shaft. When the gear lever is in the neutral position the gears are not engaged and no drive is transmitted through the gearbox.

The high and low-range gears are incorporated in the main gearbox between the two end-plates, but the slow and normal gears form an auxiliary

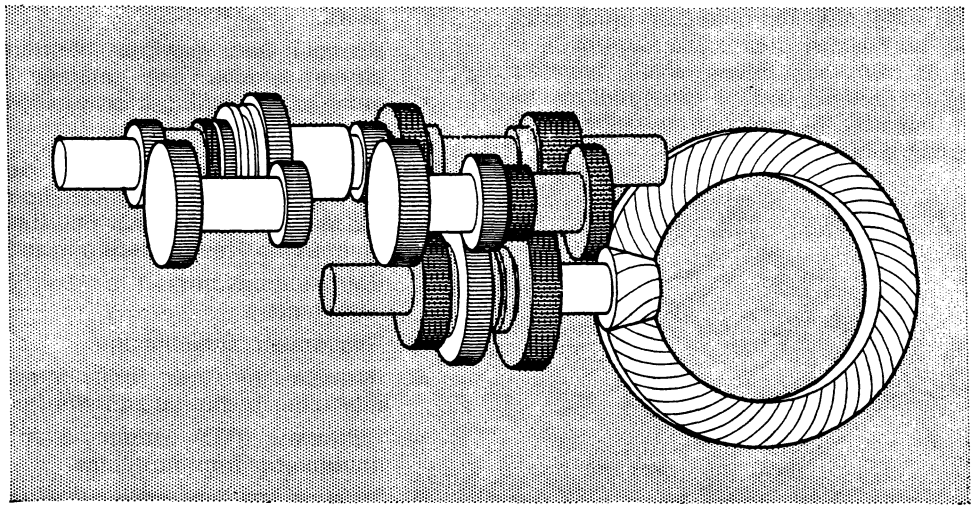

Figure 15. GEAR TRAIN
Second gear — low ratio (creeper gear in low)

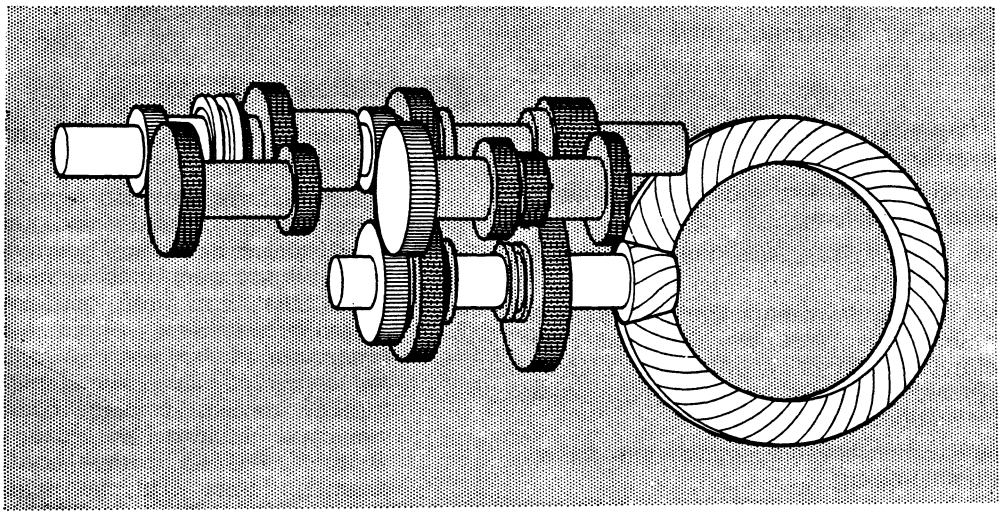

Figure 16. GEAR TRAIN
Third gear — low ratio (creeper gear in normal)

reduction unit which is mounted inside the front end-plate. The range gear lever selects the range in use and has four position — low-slow, low-normal, high-low, and high-normal ranges.

Gearbox Removal

Before starting to strip tractor for gearbox removal thoroughly clean gearbox cover, rear-axle case and power take-off case, to prevent any possibility of dirt entering main frame and subsequently damaging the hydraulic system.

On 770 tractors the gearbox cover is integral with the clutch housing, and the fuel tank, instrument panel and wiring must therefore be removed in order to remove gearbox cover. Also note that the steering-box must be removed first as one of the gearbox cover holding-down bolts is inside the steering-box oil bath (Fig. 17).

On tractors from Serial No. 580651 the gearbox can be removed forwards after the reduction units have been removed, but tractors prior to this number have a larger web in rear main frame which prevents gearbox being slid forward, and on these tractors the gearbox must therefore be removed rearwards after first removing rear axle case.

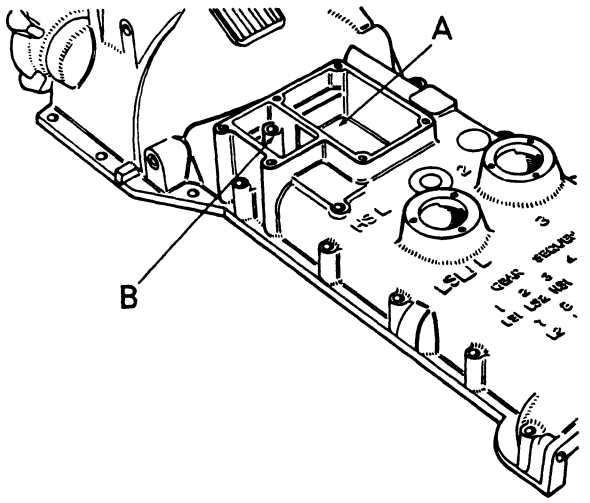

Figure 17. GEARBOX COVER

A. Steering-box oil bath B. Main frame bolt-hole

Removing Gearbox: Tractors from Serial No. 580651 onwards —

1. Disconnect throttle and stop control linkage and steering drop-arm.
2. Remove steering-box, fuel tank, instrument panel and wiring.
3. Remove the figure-of-eight spring clips from clutch shaft fork; these are accessible after removing the cover from underside of main frame clutch compartment and right-hand side inspection cover.
4. Disconnect main lead and remove starter motor from clutch housing.
5. Remove gearbox cover, noting that one of the bolts is in the steering-box oil bath. Drain transmission oil, remove sump cover and filter.
6. Support tractor under the main frame and remove both rear wheels and reduction units. It is advisable to slacken off the brake rod adjustment to ensure that the shoes do not bind in the drums as the reductions are removed.
7. Remove right-hand side oil-seal housing from axle case and extract the differential lock sleeve and spring from differential case. As the spring may have expanded and trapped the sleeve in the case, it may be necessary to manipulate the differential-lock pedal whilst positioning the sleeve for extraction.
8. Disconnect and remove gearbox lubrication pipes.
9. Release circlip locating muff-coupling and slide the coupling forwards. Retain the spacing shims from driving-gear shaft.
10. Disconnect sensing unit cable and remove power take-off unit. Withdraw PTO cardan shaft.
11. Remove two gearbox mounting bolts and dowel screws. The gearbox can now be removed by sliding it forward and lifting it out of main frame.

Removing Gearbox: Tractors to Serial No. 580650 — The gearbox in these tractors must be removed rearwards after rear axle has been "split" from main frame. The procedure is as follows:

1. Carry out operations 1 to 10 as given above for later models.
2. Disconnect brake linkage.
3. Remove the four bolts attaching the oil inlet pipe to the base of the hydraulic pump.
4. Withdraw PTO cardan shaft and remove mudguards from footplates.
5. Support rear axle case on a trolley-jack and remove the nuts and bolts attaching axle to main frame. Ease case off the dowels and gently withdraw from main frame; ensure that PTO cardan shaft remains in gearbox.
6. Remove the two gearbox mounting bolts and dowel screws then slide gearbox rearwards out of main frame.

Replacing Gearbox

The following operations apply to all models except where stated:

1. Ensure that inside of main frame is clean, then lower gearbox and slide it into position. Fit the dowel screws and clamp down rear end-plate using the mounting bolts without the bushes. Check that both front end-plate lugs are seated on main frame — if not, release the four Nyloc nuts on front ends of spacer bars and tap the end of each bar with a copper hammer to allow the bars to align themselves in the end-plate. Retighten the spacer bar nuts to 70 lb ft (9·67 kg metres) and remove the mounting bolts. Refit the bolts with their bushes and tighten to 100 lb ft (13·83 kg metres). The gearbox is not bolted rigidly to the frame but should have a small amount

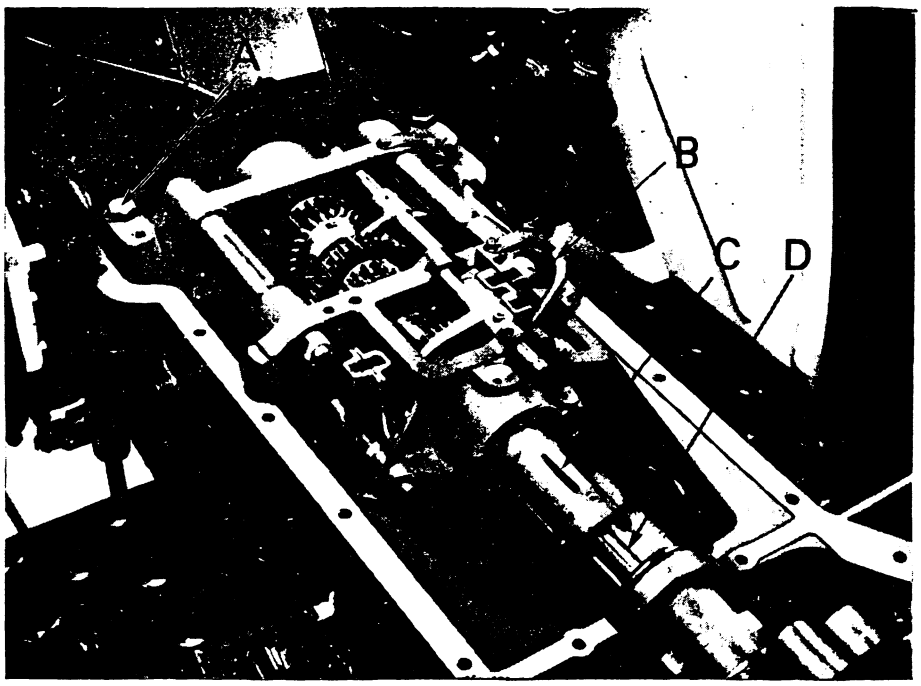

Figure 18. '770' TRACTOR WITH GEARBOX COVER REMOVED

A. Gearbox mounting bolts B. Lubrication pipe C. Muff coupling D. Clutch driveshaft

of vertical and horizontal "float" when the bolts are fully tightened.

2. **Tractors to Serial No. 580650 only:** Slide PTO cardan shaft into gearbox, noting that the shaft end with the tapped hole must be towards the PTO unit. Fit rear axle into position on the dowels, guiding the oil inlet pipe and PTO shaft into position at the same time. Refit cap screws and nuts and tighten to 45 lb ft (6·22 kg metres). Refit the bolt attaching oil inlet pipe to main frame and replace filter and sump plate. Reconnect brake linkage.
3. Push differential lock spring into differential gear and push sleeve against the spring. Insert the special tool (Fig. 19) into axle case and against the sleeve. Push sleeve against spring until the splines on sleeve start to enter differential gear, then move the tool to engage pedal fork in the sleeve groove. The pedal should then be fastened in the "engaged" position to hold the sleeve in place so that the reduction unit can be refitted.
4. Examine axle case oil seals and replace if they are in poor condition. If new seals are fitted ensure that they are positioned so that the seal lips will point towards the centre of the tractor when installed and pack the cavity between the seals with high-melting-point grease. Replace right-hand oil seal housing, smearing the outside of housing with jointing compound before pressing it into axle case. Smear the inside of oil seals with grease, fit the reduction units and rear wheels then adjust brakes.
5. Refit muff coupling and check the end-float. If coupling end-float is not 0·010–0·040 in. (0·25–1·0 mm) remove or add shims as required. Replace gearbox lubrication pipes.
6. **Tractors from Serial No. 580651 only:** Fit PTO cardan shaft into gearbox and replace PTO housing.

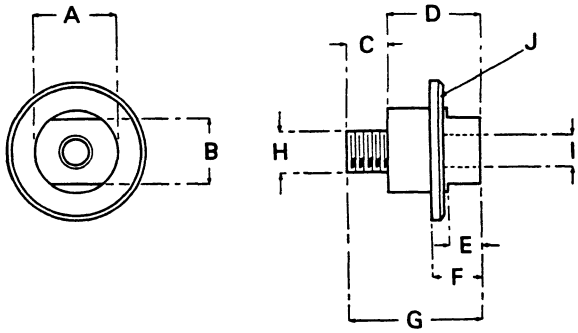

Figure 19. TOOL FOR REPLACING DIFFERENTIAL LOCK SLEEVE

A.	1¼ in. (31·7 mm)	B.	1 in. (25·4 mm)
C.	⅝ in. (15·9 mm)	D.	1⅜ in. (34·9 mm)
E.	½ in. (12·7 mm)	F.	⅞ in. (22·2 mm)
G.	2 in. (50·8 mm)	H.	⅝ in. UNC thread
I.	½ in. Whitworth thread	J.	1¼ in. washer welded as shown

This tool is used with slide hammer 4235A and the thread at H is to enable the tool to be also used for extracting the front axle trunnion pin

7. Refit gearbox cover and replace the figure-of-eight spring clips on to clutch-shaft fork. Adjust clutch pedal free-play to ½–¾ in. (See Page 8, Clutch Section).
8. Refit the starter motor and steering column box.
9. Replace fuel tank and instrument panel, reconnect the wiring and controls.

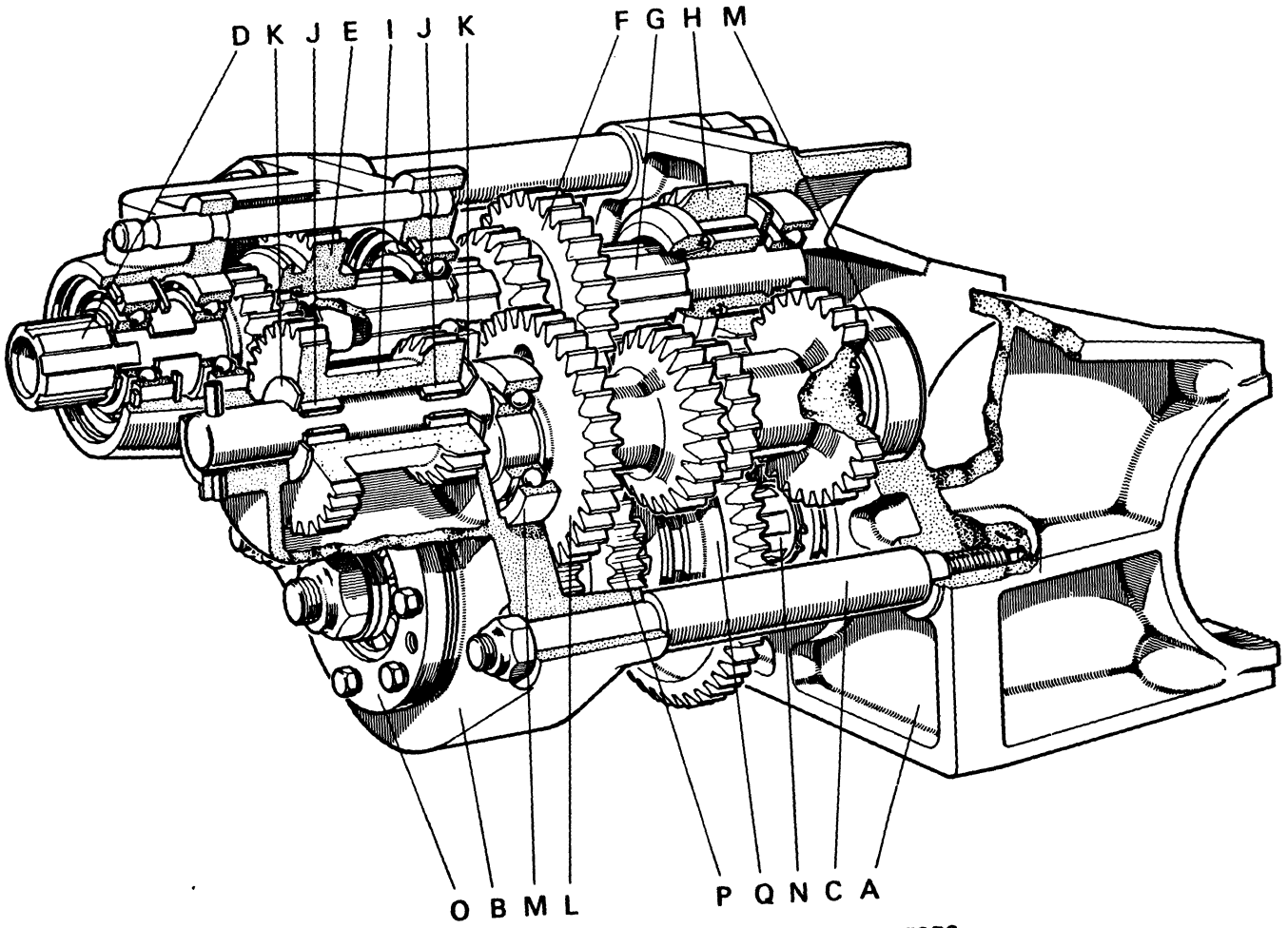

Figure 20. TWELVE-SPEED GEARBOX — 770 TRACTORS

A. Rear end-plate
B. Front end-plate
C. Spacer bar
D. Driving gear
E. Slow-normal gear
F. High-low range gear
G. Driveshaft
H. Reverse idler gear
I. Creeper layshaft
J. Needle roller bearings
K. Thrust washers
L. Main layshaft
M. Ball bearing
N. Pinion shaft
O. Pinion housing
P 2nd/3rd gear
Q. 1st/Reverse gear

Dismantling the Gearbox

If gearbox is to be completely dismantled, the Nyloc nut on the pinion shaft (left-hand thread) should be removed first as the shaft is difficult to hold when the gearbox has been partly dismantled.

Continue by removing the four Nyloc nuts from the ends of spacer bars. Withdraw front end-plate complete with all the selector forks and rods, pinion shaft, driveshaft and layshaft. The layshaft can now be withdrawn from front end-plate and the ball bearings removed as required. The shims controlling the layshaft end-float should be removed from front end-plate and kept with the layshaft until reassembly. Also remove the shims controlling driveshaft end-float.

Drive out the Mills pin fixing the High/Low ratio selector fork to the selector rod and withdraw driveshaft rearwards complete with gear, selector fork and bearings.

Rotate the High/Low selector rod until the Mills pin holding the selector can be driven out and then withdraw the rod rearwards, taking care to retain the detent ball, spring and interlocking plunger until required for assembly.

The driveshaft also carries the reverse idler gear and this may be removed by supporting the gear on the bed of a press and pressing the shaft out of the gear and rear bearing; the gear carrier bush can be left on the shaft if it is kept clear of the press support. Note that the thrust washer at rear of bearing is locked to carrier by means of a small dowel pin.

Remove the bolts attaching pinion-bearing housing to front end-plate and withdraw housing by screwing two $\frac{3}{8}$ UNC bolts into the threaded holes in housing flange. The end of pinion shaft should be tapped with a copper hammer to prevent it from being drawn out with the housing. When housing has been removed the pinion shaft can be lowered to clear the selector forks and then withdrawn rearwards.

The shims fitted between pinion housing and end-plate should be retained for use during assembly as these control the meshing of the crown-wheel and pinion.

If pinion-shaft gears are to be removed they should be supported on the bed of a press and the shaft then pressed out of inner bearing track and gears. The inner-bearing tracks should be placed with the distance piece and shims and kept until required for assembly.

The 1st/Rev. and 2nd/3rd gear selectors, rod and forks need not be removed unless required, removal procedure being the same as for the other selectors.

Drive the Mills pin out of creeper-gear selector fork and remove the rod, detent ball and spring. The driven gear can now be lifted out of its housing. Remove the circlip from driving-gear shaft and press the gear out rearwards. Remove circlip retaining the front ball-race and press the bearing out. The rear bearing will probably have been removed with the driveshaft, but if not it can now be easily pressed out of the housing.

Drive out the spring pin locating creeper-gear layshaft spindle and remove the spindle forwards. Lift out layshaft together with the thrust washers.

Make suitable marks on the differential-bearing caps so that the caps can be replaced in their original position, then remove the four cap bolts and lift differential assembly from end-plate.

To strip the differential, unlock the tabwashers and remove differential-casing cover bolts, mark the position of cover and case then lift cover off the dowels. Remove one of the split pins, or circlips, from end of differential pin and tap pin out of casing to release the bevel pinions.

Assembling the Gearbox

After cleaning all components, examine the gears for chipped or worn teeth and check the bearings for any sign of roughness. If the pinion-roller bearings are to be renewed, remove outer tracks from housing and rear end-plate and fit the tracks supplied with the new bearings. The outer track of pinion rear race is secured in rear end-plate by means of a bolt and two special washers. If this bolt is removed ensure that it is replaced with the bolt head on the rear (crown-wheel side) of end-plate — otherwise the bolt may foul the crown-wheel — and the nut tightened to 9 lb ft (1·33 kg metres).

The two lower spacer bars are screwed (right-hand thread) into rear end-plate and do not normally require removing. If, however, the bars are removed the threads should be degreased, smeared with Loctite sealant (960998) and then screwed into end-plate and firmly tightened.

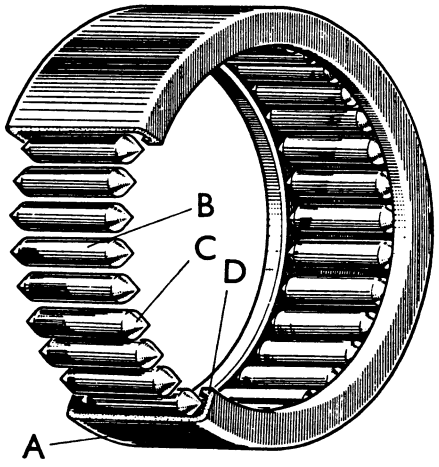

Figure 21. NEEDLE ROLLER BEARING

A. Steel shell
B. Needle roller
C. Roller chamfer
D. Shell lip

Examine the condition of needle-roller bearings inside creeper layshaft and renew if worn or damaged. These bearings consist of a number of small diameter rollers housed inside a thin steel shell. The ends of the rollers are chamfered and the ends of the shell lipped inwards so that they pass round the roller chamfers and retain the rollers in position. It is, therefore, very important that no undue force is applied to the bearings as this may distort the shell lip and jam the rollers.

Once fitted, needle-roller bearings should not be removed unless they are to be renewed, and when fitting new bearings these must be pressed in using a special tool to protect the shell lip from damage (Fig. 22). The stamped end of the bearing should be placed against the tool, the bearing placed squarely in position and then pressed in. Under no circumstances should the bearing be driven or hammered in, even when using the special tool.

Smear needle-roller bearings with grease and the thrust washers with anti-scuffing paste. Lower layshaft into position in end-plate and fit the two thrust washers at the same time. Align layshaft and thrust washers with spindle holes then refit the spindle and secure with the spring pin.

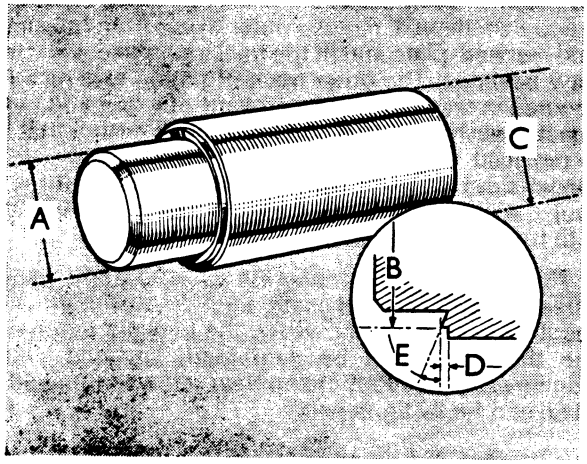

Figure 22. TOOL FOR FITTING 620070 NEEDLE ROLLER BEARING

A. Diameter 0·992 in. (25·19 mm)
B. Diameter 1·244 in. (31·59 mm)
C. Diameter 1½ in. (38·1 mm)
D. Recess $\frac{1}{16}$ in. (1·6 mm)
E. Chamfer 15°

The front ball bearing supporting the driving gear is located in the front end-plate by two circlips. Fit the inner circlip, press the front bearing into position against the circlip then fit the second circlip. Check the condition of the seal in drive gear and replace if damaged. Press rear bearing on to driving gear and after fitting the distance piece press gear and bearing into housing until the distance piece comes up against front bearing and enables the circlip to be fitted on front of gear shaft. Lower the driven gear into housing and slide the dog on to driving gear.

Insert detent spring and ball into hole in front end-plate and, using a suitable tool (Fig. 23) to hold the ball down against the spring, push the selector rod into the end-plate until the end of the rod rides over the ball and enables the tool to be withdrawn. Push the rod through selector and fit Mills pin. Drop in the interlocking plunger and fit creeper-gear selector rod in the same manner after having placed selector fork in groove of driven gear. Fit a new Mills pin into creeper gear selector fork.

Place pinion shaft in a vice, fitted with soft-jaw grips, and temporarily assemble the thrust bearings

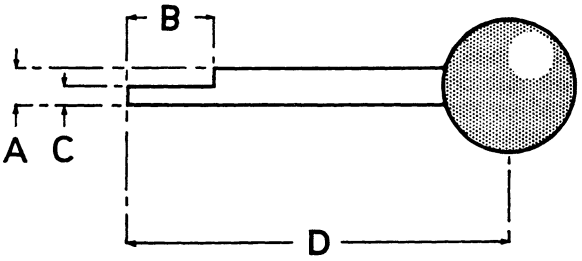

Figure 23. TOOL FOR COMPRESSING DETENT SPRINGS

A. $\frac{3}{8}$ in. (9·5 mm)
B. $\frac{5}{8}$ in. (15·9 mm)
C. $\frac{3}{16}$ in. (4·8 mm)
D. 6 in. (150 mm)
E. Gear lever knob

and housing. Tighten the Nyloc nut on end of pinion to 200 lb ft (2·76 kg metres) and check bearing clearance. This must be 0·001–0·003 in. (0·025–0·076 mm) and shims should be added or removed until this clearance is obtained. When this clearance is correct, remove the nut and draw complete bearing assembly off the pinion and retain for assembly.

Fit the 1st/Rev. gear on to pinion shaft, with selector groove towards the thrust bearings (front end), followed by the 2nd/3rd gear with selector groove towards the teeth (rear end).

Guide pinion into position in front end-plate, ensuring that selector forks are located in the grooves in the gears, and fit bearing housing complete with thrust races. The original shims should be fitted between housing and front end-plate.

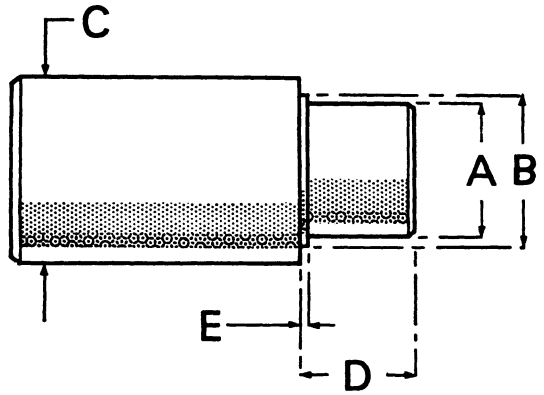

Figure 24. TOOL FOR FITTING DRIVESHAFT BUSH

A. Diameter 0·870 in. (22·09 mm)
B. Diameter 0·935 in. (23·749 mm)
C. Diameter 1¼ in. (31·7 mm)
D. Recess $\frac{5}{8}$ in. (15·9 mm)
E. Recess $\frac{1}{16}$ in. (1·6 mm)

The inside of the hollow driveshaft has a recess at the front end and on Livedrive tractors a bush is fitted in the recess to act as a steady bearing for the power take-off cardan shaft. The same driveshaft is used in Non-Livedrive gearboxes but as the shorter cardan shaft does not require a steady bearing the bush is omitted.

Press reverse gear carrier bush on to driveshaft until it contacts the circlip. Smear the inside of gear bush with anti-scuffing paste and slide gear on to

carrier, chamfered edge of teeth towards front of shaft. Fit thrust washer, locking this to carrier bush by fitting the pin through the holes in thrust washer and carrier, followed by the rear bearing. Press rear bearing on to shaft until thrust washer and carrier bush are pushed against circlip, then check that the gear can be turned quite freely. Slide range pinion on to driveshaft, selector groove towards the rear. Fit circlip on to shaft and press the front ball race on to shaft until it contacts circlip. Fit High/Low range selector fork into the groove in the gear and, whilst sliding fork on to rod, replace driveshaft in front end-plate.

Fit the two bearings on to main layshaft and replace layshaft in front end-plate.

The front end-plate is now complete with all the gears, shafts, selectors and rods. Place the original shims in the layshaft and driveshaft bores in the rear end-plate and assemble the two end-plates together. Tighten the spacer bar nuts to 70 lb ft (9·67 kg metres) and check the shaft end-floats. These should be: layshaft 0·010–0·015 in. (0·25–0·38mm), driveshaft 0·006–0·010 in. (0·15–0·25 mm). If the end-floats are incorrect remove front end-plate and adjust the shims.

DIFFERENTIAL

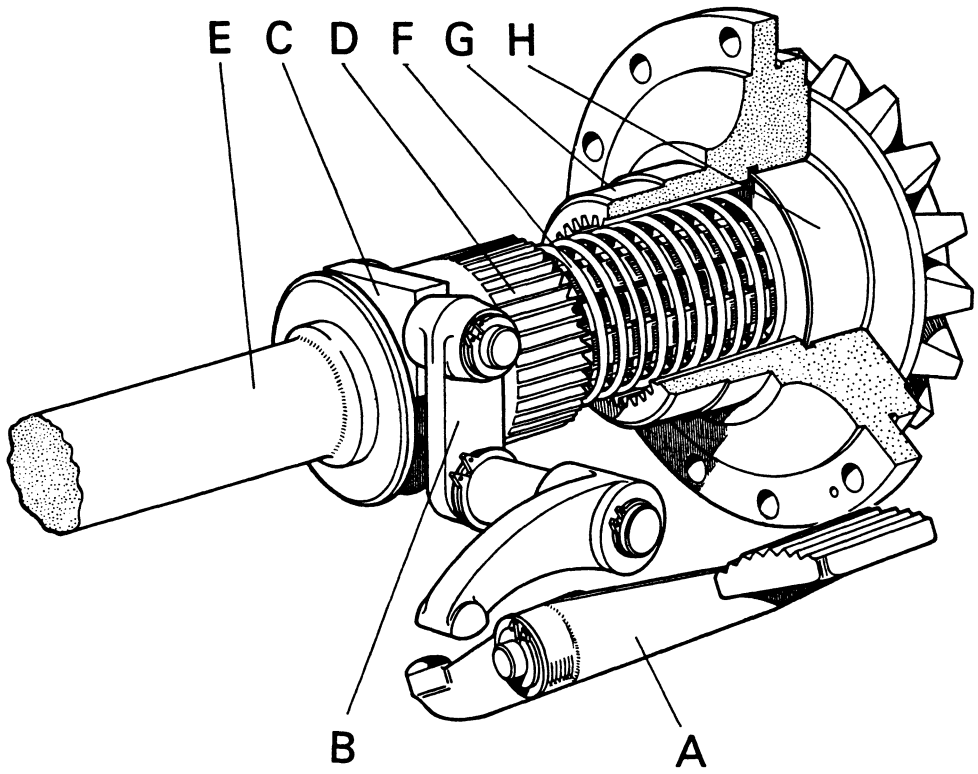

Figure 25. DIFFERENTIAL LOCK

A. Foot pedal
B. Lever and shaft
C. Fork
D. Splined sleeve
E. Spur pinion shaft
F. Compression spring
G. Side-plate — differential cage
H. Differential gear

The differential is mounted on the gearbox rear end-plate and permits the two rear wheels to rotate at different speeds whilst transmitting equal driving torque to both wheels.

As the differential action is essential to allow the tractor to turn from a straight course but limits the wheel grip, by allowing one wheel to remain stationary when the other is spinning, a differential lock is fitted so that when the lock is applied the rear wheels cannot revolve at different speeds.

The differential lock is controlled by a foot pedal on right-hand side of tractor and when the pedal is depressed the sleeve on spur pinion shaft slides into engagement with differential cage and gives, in

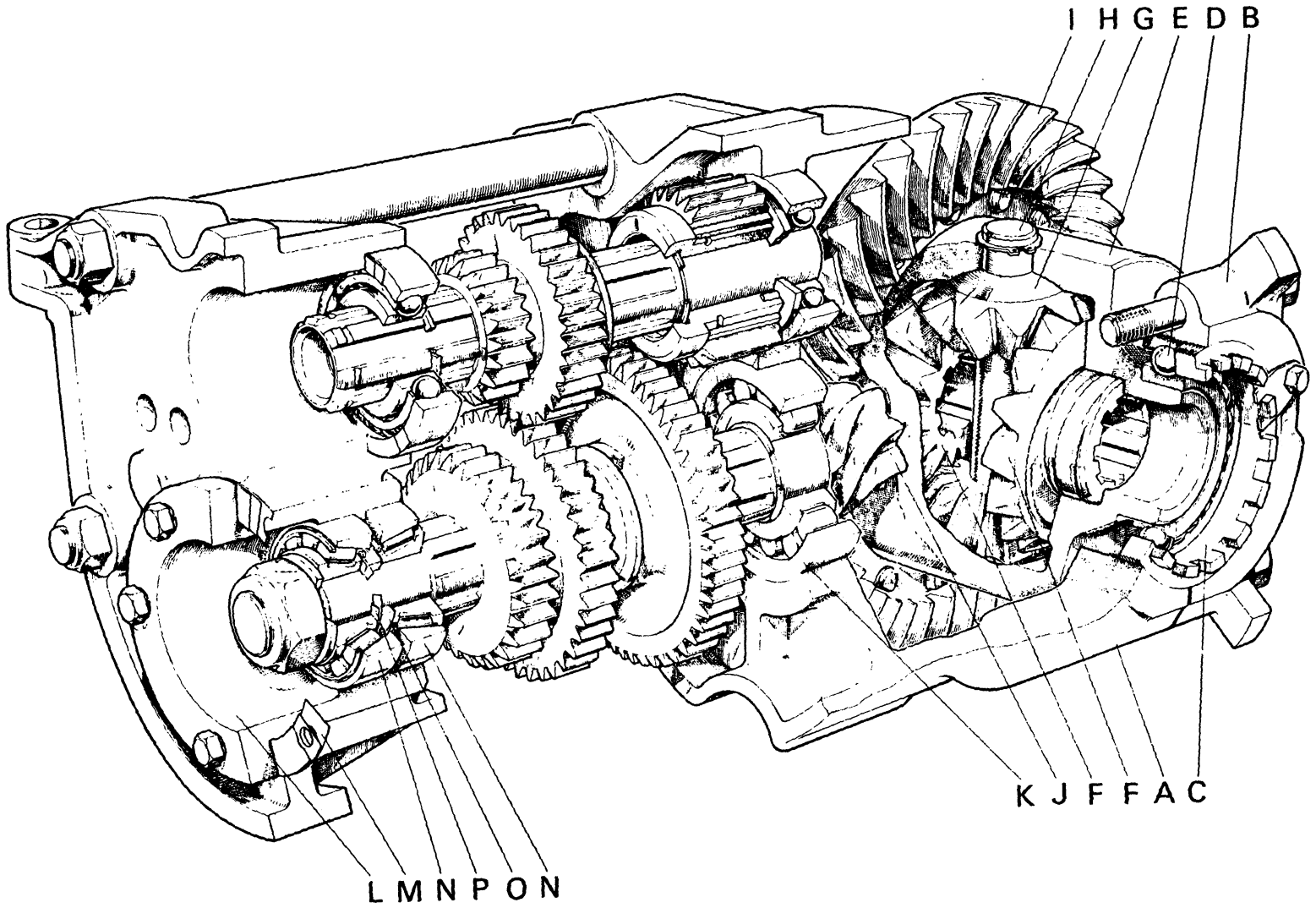

Figure 26. DIFFERENTIAL

A. Gearbox rear end-plate
B. Bearing cap
C. Bearing adjuster
D. Angular contact bearing
E. Differential cage
F. Differential gear
G. Differential pinion
H. Pin
I. Crown wheel
J. Bevel pinion
K. Roller bearing
L. Bearing housing
M. Shims
N. Thrust bearings
O. Distance piece
P. Shims

effect, a solid drive to both wheels. Maximum wheel grip is therefore obtained, but as both wheels are being driven at the same speed the tractor will tend to travel in a straight line and make it impossible to turn sharply. For this reason the differential lock should not be used on the highway or when travelling at high speed as the unexpected failure of the tractor to turn could have serious consequences. The differential-lock pedal is spring loaded so that it returns to the disengaged position when released, but as the sleeve is most likely to be under torque — and the pressure against shaft splines will prevent the spring from sliding the sleeve along shaft — the lock will not always disengage when the pedal is released. If pedal therefore remains down when released, the differential lock is engaged and no attempt should be made to turn tractor sharply until the pedal has sprung upwards; if necessary, momentarily depress the two brake pedals in turn to release the torque and allow lock to disengage.

Dismantling the Differential Assembly

The differential assembly is attached to the gearbox rear end-plate by means of two bearing caps and before the caps are removed they should be marked so that they can be refitted in their original position; the caps are bolted to the end-plate before final machining and are not, therefore, interchangeable.

After removing differential assembly, unlock tab-washers and remove end-plate nuts. Mark the position of end-plate and cage then carefully tap the plate off dowels. Remove pinion pin; this is secured by a split pin, or on later models a circlip, at each end, and extract the pinions and side gear.

The crown-wheel is bolted to differential case and need not be removed unless it is to be renewed. Crown-wheels and pinions are matched during manufacture and must not be interchanged. Replacement crown-wheels and pinions obtained from Parts Department are wired together and care must be taken to ensure that they do not become detached during storage. If a crown-wheel or pinion becomes worn it must not be replaced singly but should be replaced with a matched pair of gears.

Examine differential side bearings and renew if they show any signs of roughness. As the bearings are angular contact type, they cannot be removed by holding the outer track but must be removed by using an extractor, such as Service Tool 960605, which pulls against the bearing inner track.

Assembling the Differential

Fit crown-wheel on to differential cage. Ensure that wheel face fits flat against the cage flange and tighten the bolts, by diagonal selection, to 50 lb ft (6·91 kg metres) before locking with the tabwashers.

Press the side bearings on to the cage and side-plate. As these are angular contact bearings they must be fitted so that the word "Thrust" stamped on the outer track is facing away from differential and will be against the bearing adjuster when fully assembled.

Smear bearing faces of the two bevel gears with anti-scuffing paste and place one of the gears inside differential cage. Smear the bores and faces of the two bevel pinions with anti-scuffing paste and place them both in position inside cage. Push the pin through holes in the case and gears before securing the pin in position with split pins. On later models the pin is free to rotate and is retained in position by circlips, but on earlier models the cage is grooved so that the retaining split pins also prevent the pin from rotating. Place remaining bevel gear on the two pinions and fit end-plate on to cage. Ensure the marks made before dismantling are aligned and the plate fits flat against cage face. Cages with nine bolt holes are fitted with $1\frac{1}{8}$ in. (28·57 mm) long dowels, but cages with six bolt holes are only drilled deep enough for $\frac{3}{4}$ in. (19·05 mm) long dowels. Replace the bolts after degreasing the threads and treating with Loctite. Position the tabwashers so that they cover the dowels and tighten the bolts by diagonal selection to 30 lb ft (4·15 kg metres) before locking with the tabwashers.

When fitting end-plates with nine bolt holes ensure that the plate is fitted with the dowels located in the three special holes. As the dowel holes are only slightly smaller than the bolt holes, to assist identification a small indentation is made adjacent to one of the dowel holes.

Remove bearing caps from gearbox rear end-plate and place the differential in position: crown-wheel on right-hand side of pinion. Replace bearing adjusters and caps, ensuring that the marks made on caps and end-plate are aligned.

Crown-Wheel and Pinion Adjustment

To obtain long life and quiet running of the crown-wheel and pinion it is essential that they are correctly meshed and adjustment is therefore provided so that both crown-wheel and pinion can be moved to bring the teeth into correct mesh.

Adjustment of crown-wheel is by means of two ring nuts on differential side bearings, which can be screwed in or out to move differential cage sideways, and pinion adjustment is by means of shims fitted between the thrust-bearing housing and gearbox front end-plate, which can be changed in thickness to move the pinion in or out of mesh.

After mounting differential assembly on gearbox rear end-plate, screw right-hand bearing adjuster inwards until the gear teeth backlash is reduced to 0·007–0·009 in. (0·18–0·23 mm) and screw left-hand adjuster inwards until differential cage end-float is reduced to 0·000–0·002 in. (0·00–0·05 mm).

To check the differential cage end-float, mount dial gauge with its finger resting on the differential cage and, with a suitable lever at each side of the differential cage, lever the cage first to one side and then the other. The amount of clearance will then be shown on the dial gauge.

The teeth backlash can be checked by mounting a dial gauge at right-angles to the crown-wheel teeth and holding the pinion — by levering against one of

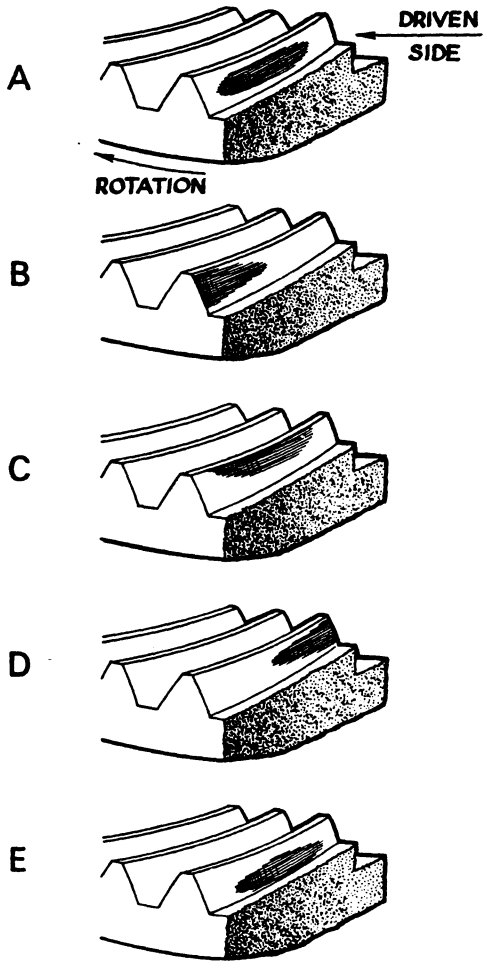

Figure 27. CROWN WHEEL TEETH MARKING

A. CORRECT MARKING

Contact area extending approximately two-thirds of the length of the tooth and positioned slightly towards the outer edge.

B. HEEL CONTACT

Pinion requires moving nearer to crown wheel by reducing the thickness of the bearing housing shims.

C. PEAK CONTACT

Gears too far out of mesh. If backlash is not excessive move pinion nearer to crown wheel.

D. TOE CONTACT

Gears too deep in mesh. Increase thickness of bearing housing shims to move pinion away from the crown wheel.

E. ROOT CONTACT

Gears too deep in mesh. If backlash is sufficient, move pinion away from the crown wheel by increasing the thickness of the bearing housing shims.

the gears with a hammer shaft — whilst rocking the crown wheel against the stationary pinion. The amount of crown-wheel movement, which will also be the amount of tooth backlash, will then be shown on the gauge.

When gear backlash and bearing clearance are correct, smear the crown-wheel teeth with marking compound and whilst applying a slight load to the pinion shaft rotate the crown-wheel in alternate directions. The resulting mark on the crown-wheel teeth should be slightly towards the outer edge of the teeth and extend approximately two-thirds of the length of the teeth. After examining the teeth marking, correct as required (see Fig. 27) by removing the thrust-bearing housing bolts, withdrawing the housing and adding, or removing, shims. Shims may be cut adjacent to one of the semi-circular cut-outs to enable the shims to be fitted without removing housing from pinion.

As any adjustment made to the position of pinion will also affect gear backlash it may be necessary to readjust the position of the crown wheel after each pinion adjustment. Since turning the bearing adjusters to re-set the tooth backlash will disturb the end-float setting, note how far the adjuster is turned and then turn the other side adjuster exactly the same amount but in the opposite direction, e.g., if the right-hand adjuster is screwed outwards two castellations and the left-hand adjuster screwed inwards two castellations the differential cage end-float will be unchanged but the tooth backlash will be increased.

When checking the gear marking ensure that pinion-housing bolts are fully tightened and the side bearings are against the adjusters. Tapping differential cage from side to side with a soft-faced hammer will push side bearings against adjusters and prevent any possibility of obtaining a false amount of end-float.

When a satisfactory tooth mark has been obtained and the gear backlash and bearing end-float are correct, tighten the cap nuts to 120 lb ft (16·6 kg metres) before locking with the tabwashers. Fit the plates to lock the bearing adjusters and check that pinion-housing bolts are tightened to 30 lb ft (4·14 kg metres).

REDUCTION UNITS

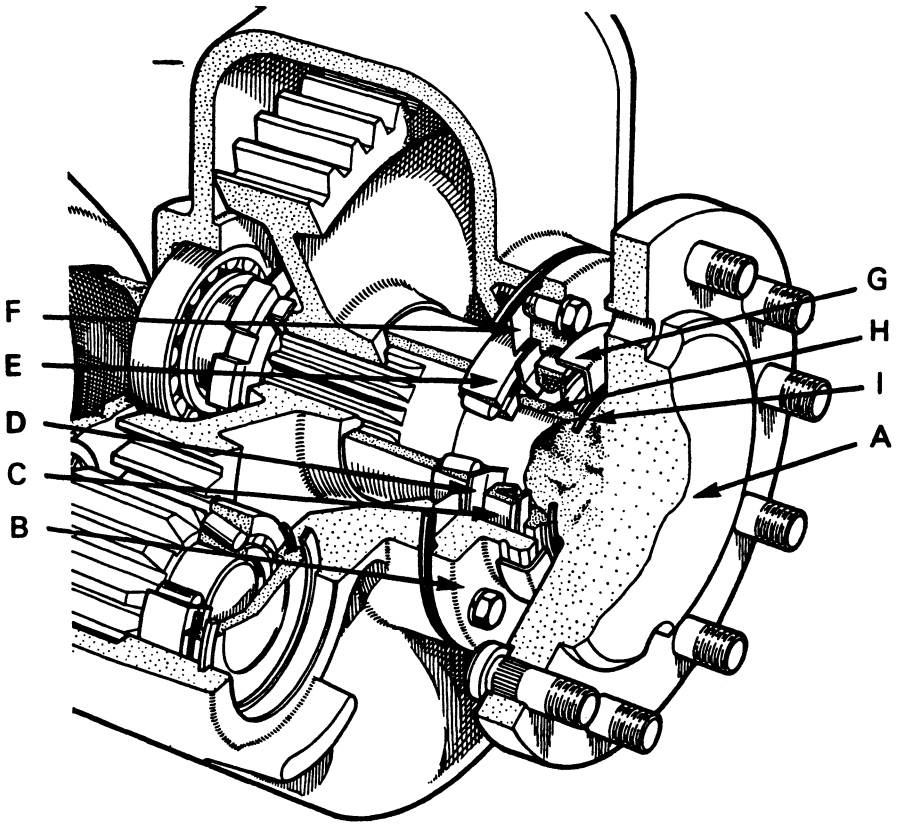

Figure 28. FINAL DRIVESHAFT OIL SEAL — 990 TRACTOR

A. Final driveshaft B. Oil seal housing C. Oil seal D. Grease baffle E. Taper roller bearing
F. Shims G. Dirt shield H. Collar I. 'O' ring

The reduction units are bolted to the ends of rear axle case and consist of a one-piece casting which houses the spur reduction final drive gears. The spur pinion shafts are splined into differential at their inner ends and are supported by two taper roller bearings in the reduction housing at their outer ends. The final drive shafts are supported on taper roller bearings and are fitted with special seals to retain lubricant and prevent dirt entering the reduction unit.

Final Driveshaft Oil Seals

The oil seal on the final driveshafts prevent dirt entering shaft bearings and the purpose of the grease nipple is to maintain the seal cavity full of clean grease. When grease is pumped through the nipple, excess grease in the cavity is forced outwards between shaft and housing and pushes out dirt which would otherwise damage the seal. A discharge of grease out of the seal housing is not, therefore, detrimental but desirable, as this ensures that the seal is being kept free of abrasive matter which would quickly damage the seal.

If, through lack of regular greasing, the seal is damaged by dirt, oil from the reduction unit will leak past the seal and indicate that the seal requires renewing.

To remove a final driveshaft oil seal it is not necessary to remove the reduction unit. Drain the oil and remove cover. Jack up the rear of tractor and remove wheel. Unlock tabwasher on final driveshaft and release ring nut. The nut is right-hand thread and may be released using Service Tool 909482 and a heavy copper hammer.

Insert a socket wrench through the holes in final driveshaft flange and remove two opposite seal-housing-to-reduction-case bolts.

Clean the threads in final driveshaft extraction holes by screwing a $\frac{1}{2}$ BSF tap into each hole: this is essential to prevent damage to the shaft and extraction bolt threads. Screw the two extraction bolts (Service Tool 900207) into shaft flange and place two thrust blocks between the housing flange

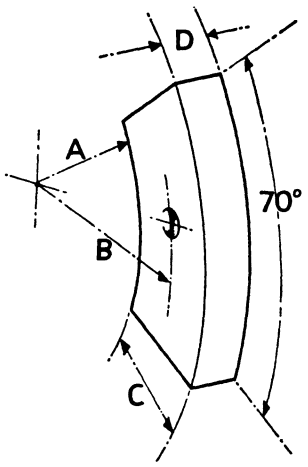

Figure 29. DIMENSIONS OF THRUST BLOCK

A. $2\frac{9}{16}$ in. (65·1 mm) B. 3 in. (76·2 mm)
C. $1\frac{5}{16}$ in. (33·4 mm) D. $\frac{9}{16}$ in. (14·3 mm)

Drill $\frac{1}{4}$ in. (6 mm) diameter indentation $\frac{1}{16}$ in. (1·6 mm) deep at position shown

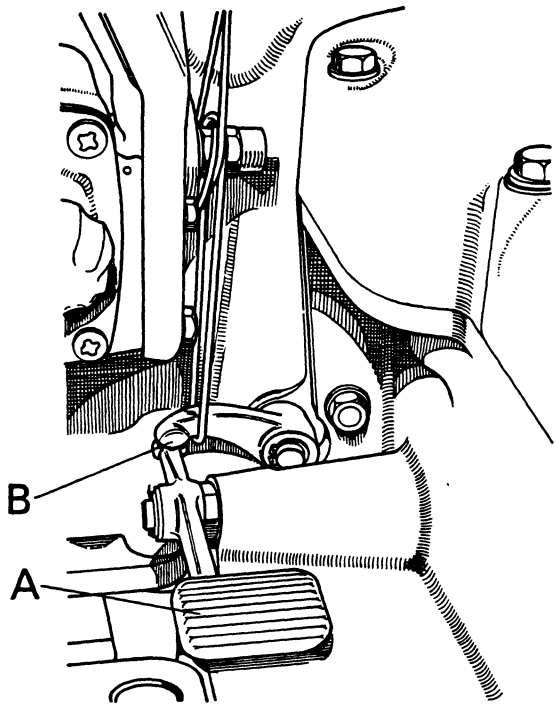

Figure 30. DIFFERENTIAL LOCK PEDAL WIRED IN ENGAGED POSITION

A. Pedal B. Operating lever

and bolt ends. These thrust blocks are necessary to prevent the extraction bolts damaging the housing, and dimensions of a suitable block are shown in Fig. 29. Tighten the bolts evenly to draw the shaft out of the housing and bearing, noting that the ring nut must be unscrewed at the same time. Shims fitted between the seal housing and case should be retained and refitted when reassembling so that the original bearing setting is maintained. Extract the gear, tabwasher, ring nut and inner bearing from inside case.

Do not attempt to remove bearing by pressing shaft out of seal housing or by using the extraction bolts with the shaft assembly clamped in a vice. If seal housing is not bolted to reduction case it will distort under pressure and cause the taper roller bearing to grip the shaft very tightly.

After extracting shaft remove the housing and bearing. Clean the housing and fit a new seal. Carefully press the seal into housing using Service Tools 960904 and 900211, to avoid distorting seal, and positioning the seal so that its inner lip is pointing towards the outside of the housing (Fig. 28).

Pack the inside of seal cavity with high-melting-point grease and clean the driveshaft before placing housing in position on shaft.

On 880 tractors the seal housing incorporates an 'O' ring which should be renewed before the housing is fitted on shaft. On 990 and 770 tractors a metal grease baffle is clamped between the housing and bearing and this should be fitted before the bearing is pressed on to shaft. The purpose of the baffle and 'O' ring is to prevent grease passing into the reduction unit, so that when grease is pumped through nipple it forces the dirty grease outwards through the gap between shaft and housing.

Ensure that inner bearing is in position inside the case — if necessary smear the bearing with grease so that it will remain in position — and replace the gear inside the case. Remove all traces of oil from shaft splines then smear splines with Loctite. Refit shaft assembly into case, fitting the tabwasher and ring nut at the same time, and also replacing the shims between the housing and case. On 990 tractors the housing should be fitted so that the grease nipple is at the seven o'clock position.

Firmly tighten shaft ring nut. As it is essential that the nut is tightened until the gear, distance piece and bearing are clamped solidly together, ensure that the nut is fully tightened before locking with the tabwasher. Do not tighten the nut with a hammer and punch but use a 'C' spanner of the correct size (Service Tool 909842) and a hammer, otherwise the gear may chatter on the splines and cause the drive-shaft to develop end-float. When the ring nut has been fully tightened, strike the centre of the shaft flange with a hide-faced hammer then check the tightness of nut.

After tightening the ring nut and oil seal housing bolts check that there is no free play in the shaft bearings. The shaft bearings should have 0·005–0·007 in. (0·127–0·178 mm) pre-load and if the original thickness of shims has been refitted the setting will be unchanged. If the bearing pre-load is incorrect shims must be added or removed (see Page 27).

Refit reduction case cover plate and fill to the correct level with the recommended grade of oil. Pump grease through the nipple until the housing cavity is filled and surplus grease is discharged through the gap between housing and driveshaft, then refit the wheel.

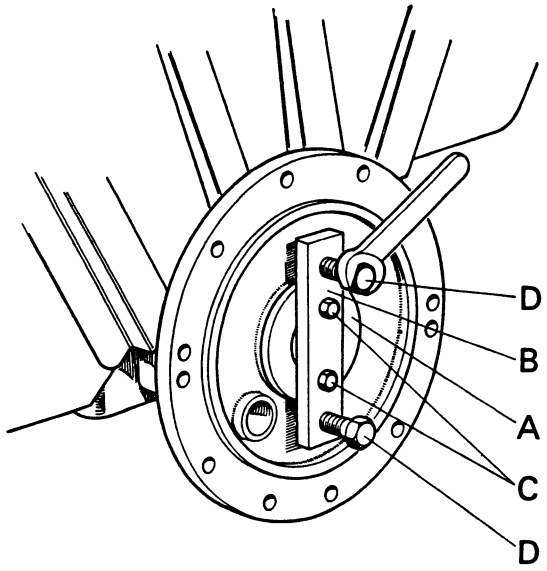

Figure 31. REMOVING OIL SEAL HOUSING FROM AXLE CASE

A. Oil seal housing B. Bridge piece
C. Bolts into seal housing D. Extraction bolts

Removal of the Reduction Units

Before attempting to remove a reduction unit first ensure that the tractor is standing on firm and reasonably level ground and that suitable packing material is available to support the weight of tractor.

Caution: The differential lock must be retained in the engaged position, by holding the pedal depressed whilst the operating lever is wired to the hand brake lever (Fig. 30), otherwise the differential-lock sleeve will become displaced when the reduction unit is withdrawn and prevent the unit from being refitted.

Raise the rear end of tractor until the rear wheels are clear of the ground, then place packings under rear axle case. Remove the rear wheels and release the brake adjustment, to prevent the brake drum from binding on the brake shoes. Remove the drain plugs and allow the oil to drain into a suitable container. Remove the bolts attaching the reduction unit to axle case and withdraw the complete unit, taking care not to damage the oil seals in axle case. A trolley-jack, or small packing case, placed under the reductions will assist in supporting the weight and allow the unit to be withdrawn horizontally until spur pinion shafts are clear of axle case.

Replacement of the reduction units should be carried out in reverse order of removal, paying special attention to the following:

1. Examine the condition of the brake linings and renew if excessively worn or contaminated with oil (see Page 29).
2. Examine the axle case oil seals and renew if damaged or if any signs of oil leakage is apparent.
3. Ensure that spur pinion shaft splines are clean and the inside of brake drum is free from oil.

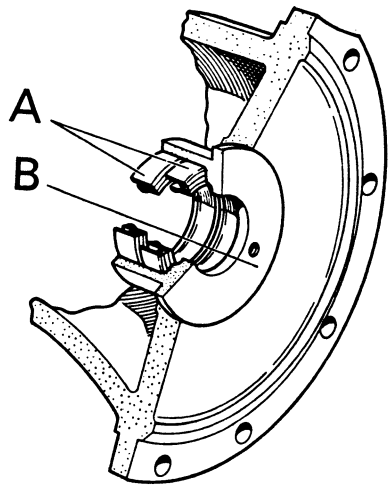

Figure 32. REAR AXLE CASE OIL SEALS

A. Oil seals B. Seal housing

Axle Case Oil Seals

The oil seals in the axle case prevent transmission oil from reaching the brake shoes and are accessible when the reduction units are removed. To remove the seal, first draw housing out of axle case, using Service Tools 900207 and 900208. These tools consist of a bridge piece and four extractor bolts: the two $\frac{1}{2}$ BSF bolts fit through the inner holes in the bridge piece and into the two tapped holes in seal housing; the two $\frac{1}{2}$ BSF bolts screw through the tapped holes in bridge piece and against axle case (Fig. 31). Tightening the two outer bolts will then draw the housing out of the axle case and allow the oil seal to be pushed out of housing by tightening the two inner bolts.

When fitting new seals, position the seals so that when installed all the seal lips point towards the centre of tractor. Before fitting the seal housing into axle case, pack the cavity between the seals with high-melting-point grease and smear the inside of seals with grease and the outside of the housing with jointing compound.

Dismantling the Reduction Units

Remove brake drum from spur pinion shaft, using Service Tool 960618 or two $\frac{1}{2}$ UNC extractor bolts screwed through the tapped holes in the drum and remove the reduction case cover.

Unlock the tabwasher on final driveshaft and release ring nut until it touches the inner bearing. The nut is right-hand thread and may be released using Service Tool 909802 and a hammer.

Insert a socket wrench through the holes in final driveshaft flange and remove two of the bolts attaching seal housing to reduction case. Clean the threads in the final driveshaft extraction holes with a $\frac{1}{2}$ BSF tap: this is essential to prevent damage to the shaft and extraction bolt threads. Screw two extraction bolts (Service Tool 900207) into shaft flange and place two thrust blocks between the housing flange and bolt ends. These thrust blocks are necessary to prevent the extraction bolts damaging the housing, and dimensions of a suitable block are

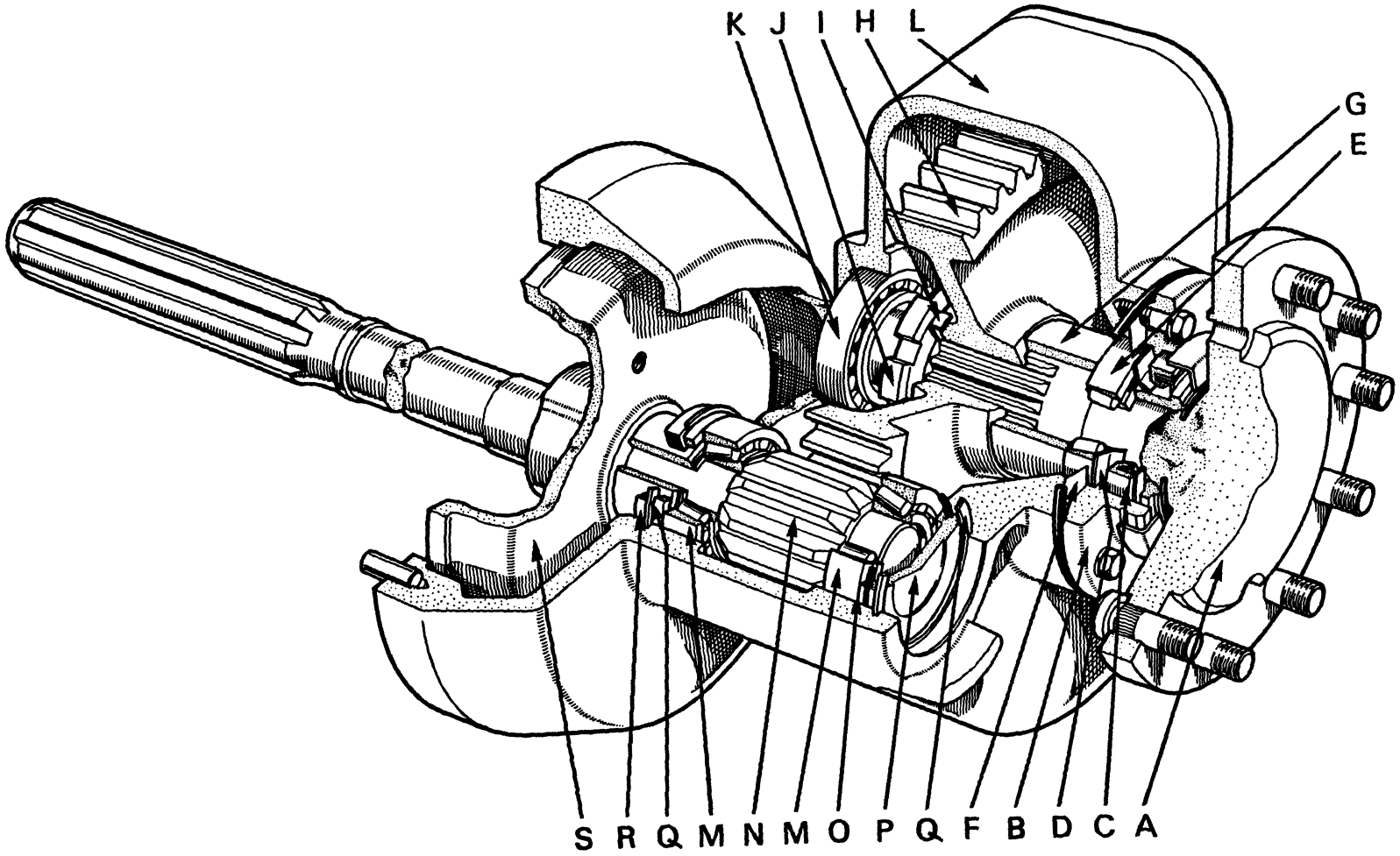

Figure 33. REDUCTION UNIT—990 TRACTOR

A. Final driveshaft
B. Oil seal housing
C. Oil seal
D. Grease baffle
E. Taper roller bearing
F. Shims
G. Distance piece
H. Spur gear
I. Tabwasher
J. Ring nut
K. Taper roller bearing
L. Case
M. Taper roller bearing
N. Spur pinion shaft
O. Shims
P. End cover
Q. Circlip
R. Oil seal
S. Brake drum

shown in Fig. 29. Tighten the bolts evenly to draw the shaft out of the housing and bearing, noting that the ring nut must be unscrewed at the same time.

Do not attempt to remove bearing by pressing shaft out of seal housing or using extractor bolts with the shaft assembly held in a vice. If the seal housing is not bolted to reduction case it will distort under pressure and cause the taper roller bearing to grip the shaft very tightly.

After withdrawing shaft remove seal housing and bearing then press oil seal out of the housing. Shims are fitted between the housing flange and reduction case and these should be retained for use during assembly.

Spur Pinion Shaft Removal — 880 and 990 Tractors

Remove the circlip from outside the outer bearing end-cover then remove the shaft by tapping the splined end with a soft-faced hammer. The shaft will push the end-cover shims and outer bearing out of the case, but the oil seal and outer track of the inner bearing will remain in position. Remove the oil seal by passing a long drift through the end-cover aperture, then remove the bearing outer track by tapping inwards into case.

Spur Pinion Shaft Removal — 770 Tractors

Removing the brake drum will expose the shaft collar and this must be removed from shaft. The collar should not be very tight and is provided with a groove so that it can be levered out of position. After removing collar, lever oil seal out of case to expose inner bearing circlip. Remove the circlip then pierce the welch plug with a sharp punch and lever the plug out. Insert a $\frac{3}{4}$ in. (20 mm) diameter soft drift through the welch plug aperture and, whilst holding the shaft square with case, drive the shaft out. The inner bearing, shims and distance piece will be removed with shaft but the outer track of outer bearing will remain in the case and may be removed using Service Tool 960608 with an adaptor made to the dimensions shown in Fig. 34.

Replacing the Spur Pinion Shafts

After cleaning all components, examine bearings for any signs of roughness and the gear teeth for wear. If the bearings are not being renewed, the bearing track in case need not be removed, but if new bearings are being fitted the bearing track should be removed from the case and replaced with the track supplied with new bearing.

Refit spur pinion shaft in the opposite order of removal. On 770 tractors replace the shims between distance piece and inner bearing before replacing the circlip. The bearings should have 0·001–0·003 in. (0·025–0·076 mm) pre-load and if any free play is present rotate the shaft then push the distance piece inwards and measure the gap between the distance piece and circlip with a feeler gauge. The correct

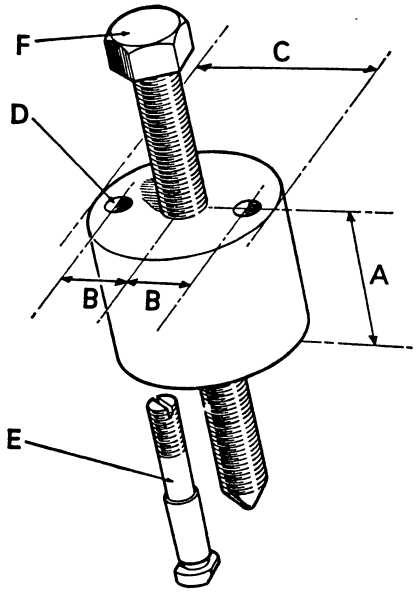

Figure 34. TOOL FOR REMOVING OUTER SPUR PINION BEARING—770 TRACTOR

A. $1\frac{3}{4}$ in. (44·4 mm) B. 0·980 in. (24·89 mm)
C. 2·415 in. (61·34 mm)
D. 0·393 in. (9·98 mm) diameter
E. 31797 bolt with thickness of head reduced to $\frac{1}{8}$ in. (3·2 mm)
F. Extractor bolt 960608 ($\frac{5}{8}$ in. BSF)

bearing preload can then be obtained by fitting additional shims which are 0·003 in. (0·076 mm) thicker than the gap. When the bearing setting is correct, fit a new oil seal, ensuring that the seal lip is pointing inwards towards the gear. Before fitting a new welch plug place unit on the floor, so that spur pinion shaft is vertical, and place a short piece of $\frac{7}{8}$ in. (20 mm) diameter bar through the welch plug hole. Fit a new 'O' ring inside the shaft collar then slide collar on to shaft: recessed edge of collar towards the bearing. Place brake drum key in position and slide brake drum on to shaft. With the end of spur pinion shaft resting on the piece of bar, drive brake drum on to shaft until it comes firmly against the collar. Do not strike the rim of brake drum but use a long piece of tube over the shaft. Fit a new welch plug when the brake drum has been driven "fully home".

On 990 and 880 tractors replace spur pinion shaft in the case then fit the outer bearing track and temporarily replace the end-cover without an 'O' ring. Fit the circlip, then rotate the shaft whilst pushing cover fully inwards and measure the gap between cover and circlip. Remove circlip and cover, fit shims 0·003 in. (0·076 mm) thicker than the width of the gap and replace the cover, with 'O' ring and circlip. The bearings will then have 0·003 in. (0·076 mm) preload.

Fit a new oil seal into the case, inner lip of the seal towards the gear. Clean the shaft and smear with Loctite before placing the collar in position on the shaft. Ensure that the collar is free from burrs or damage, which would reduce oil seal life, and is fitted so that the chamfered edge is towards the the bearing.

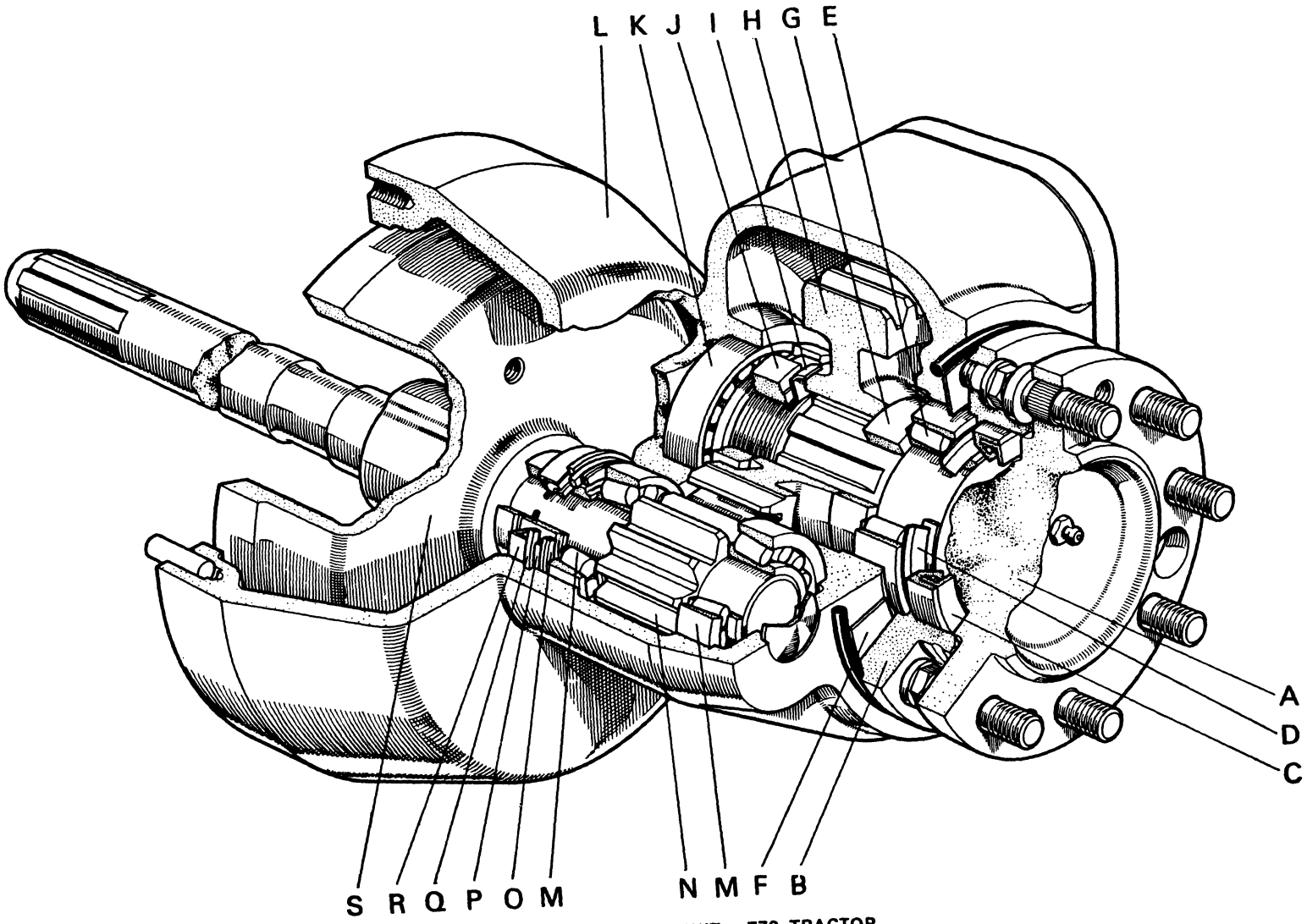

Figure 35. REDUCTION UNIT—770 TRACTOR

A. Final driveshaft
B. Oil seal housing
C. Oil seal
D. Grease baffle
E. Taper roller bearing
F. Shims
G. Distance piece
H. Spur gear
I. Tabwasher
J. Ring nut
K. Taper roller bearing
L. Case
M. Taper roller bearing
N. Spur pinion shaft
O. Shims
P. Distance piece
Q. Circlip
R. Oil seal
S. Brake drum

Fit the brake drum key into the shaft keyway and place the drum on the shaft. Using Service Tool 960618, or a long piece of tube over the shaft, drive the drum on to the shaft until it is firmly against the collar.

Replacing the Final Driveshaft

Clean the housing and fit a new seal. Carefully press the seal into position to avoid distorting seal case and position the seal so that the inner lip is pointing towards the outside of housing (Fig. 28). Pack the inside of seal with high-melting-point grease and clean the driveshaft before placing housing in position on shaft.

On 880 tractors the seal housing incorporates an 'O' ring which should be renewed before the housing is fitted on shaft. On 990 and 770 tractors a metal grease baffle is clamped between the housing and bearing and this should be fitted before the bearing is pressed on to shaft and positioned so that the inner lip of the baffle is towards the seal. The purpose of the baffle and 'O' ring is to prevent grease passing into the reduction unit, so that when grease is pumped through nipple it forces the dirty grease outwards through the gap between shaft and housing.

Place shaft inner bearing in position inside the case — if necessary smear the bearing with grease so that it will remain in position — and place gear in case. If a new inner bearing is being fitted it would be necessary to remove the bearing track from the case, using Service Tool 960608 with a 960986 adaptor, and fit the track supplied with the new bearing. Remove all traces of oil from shaft splines then apply Locquic primer and smear splines with Loctite. Fit shaft assembly into case, fitting the tabwasher and ring nut at the same time. Temporarily fit only three housing bolts, equally spaced and only screwed in finger-tight.

Firmly tighten the shaft ring nut. As it is essential that the nut is tightened until the gear, distance piece and bearing are clamped solidly together, ensure that it is fully tightened before locking with the tabwasher. Do not tighten ring nut with a hammer and punch but use a 'C' spanner of the correct size (Service Tool 909842) and a hammer, otherwise the gear may chatter in the splines and cause driveshaft to develop end-float.

When the ring nut has been fully tightened, rotate the shaft and tighten the three housing bolts until bearings become tight and prevent shaft being rocked against the gear backlash. Do not over-tighten the bolts so that the housing flange is distorted, but tighten them evenly so that when a feeler gauge is inserted between housing and case flange the gap is equal all the way round. As a false setting will be obtained if the inner bearing is not against the shaft shoulder, strike the centre of shaft flange with a soft-faced hammer to ensure the bearing is pushed "fully home". When the three bolts have been tightened as described, measure the gap between housing and case faces with a feeler gauge. This gap, if equal all the way round, will be the thickness of shims required to give the bearings no pre-load, and as the bearings require 0·005–0·007 in. (0·127–0·178 mm) pre-load shims should be selected which are 0·005 in. (0·127 mm) less than the width of the gap.

Thickness of seal housing shims:

Part No.	Shim
902772	0·003 in. (0·076 mm)
902773	0·006 in. (0·152 mm)
902774	0·009 in. (0·229 mm)
902775	0·015 in. (0·381 mm)

Having measured the gap and selected the appropriate shims, remove the three housing bolts and fit the shims. The shims are split to enable them to be fitted without removing the shaft and should be positioned so that the split will be horizontal when the unit is installed on the tractor.

On 990 tractors the seal housing should be positioned so that the grease nipple is at the seven o'clock position.

Tighten the housing bolts evenly to 50 lb ft (6·91 kg metres) and fit a new 'O' ring in the seal housing groove. Pump grease through the nipple until the seal cavity is filled and grease is forced out between housing and driveshaft flange.

Refit cover plate, using a new gasket, and tighten the bolts to 30 lb ft (4·15 kg metres) on 990 and 880 tractors and 20 lb ft (2·76 kg metres) on 770 tractors.

As it is essential that no build up of pressure takes place inside the reduction case a breather is fitted in the cover plate. On 990 and 880 tractors one of the cover bolts is drilled to act as a breather and it is therefore important that this bolt is not replaced by an undrilled bolt and is fitted at the top of cover plate. On 770 tractors a breather plug is fitted in the cover. When assembling a reduction or replacing a leaking oil seal always check that the breather is clear as a blocked breather can cause oil to be forced past the seals.

Refill the unit to the level of the filler plug with the recommended grade of oil.

BRAKES

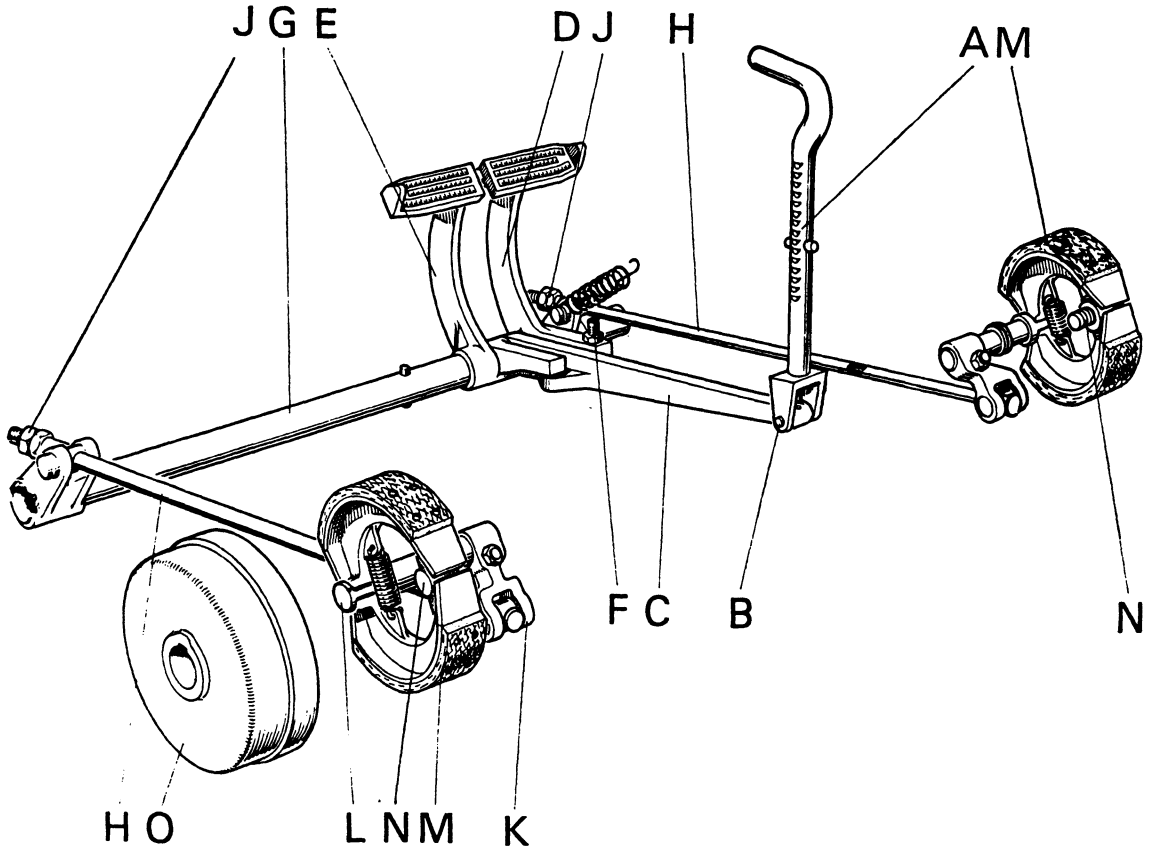

Figure 36. BRAKE MECHANISM

A.	Hand lever	B.	Fork	C.	Operating lever	D.	Right-hand pedal	E.	Left-hand pedal
F.	Adjusting screw	G.	Cross shaft	H.	Brake rod	J.	Adjusting nut	K.	Camshaft lever
L.	Camshaft	M.	Brake shoe	N.	Anchor pin	O.	Brake drum		

Operation of Brakes

The brake shoes are mounted on the ends of axle case and operate inside brake drums mounted on the spur pinion shafts. Each brake is operated by its own pedal, permitting the brake to be applied on one side only to assist steering when making very short turns in the field. For normal operations, when both brakes are required to be operated simultaneously the two pedals should be locked together.

The hand lever mounted on the side of tractor is a parking brake and applies the brakes on both sides. A spring-loaded pawl inside the lever housing engages in the teeth on hand lever to retain the lever in the "on" position. The hand lever is free to rotate, and when turned so that the lever teeth are not in line with the pawl the lever will return to the "off" position when released.

Brake Adjustment

Adjustments to compensate for lining wear should be made by reducing the lengths of the two rods connecting the camshaft levers to the cross shaft. As the linkage is not compensated, the adjustments will have to be balanced so that both brakes are applied evenly when the pedals are locked together.

To adjust the brakes, chock the front wheels to prevent the tractor from moving, then raise the rear wheels clear of the ground. With the two pedals locked together and the gear lever in neutral, release the locknut and tighten the adjusting nut on one rod until the brake starts to bind, then release until the wheel is free. Apply the hand brake until the wheel can just be turned then tighten the adjusting nut on the other side rod until both wheels bind equally. Release the hand brake and check that the wheels are free, then hold the adjusting nuts stationary and tighten the locknuts.

Adjusting the length of the brake rods also adjusts the hand brake and no further adjustment is required. When the adjustment is completed road-test the tractor and check for satisfactory brake operation.

Brake Linkage

The brake linkage is shown in Fig. 36. The two foot pedals are mounted on a common cross shaft which is supported by self-aligning bushes incorporated in the footplates. The left-hand brake pedal is secured to the shaft by a Mills pin but the right-hand pedal is loose on the shaft and is retained in position by a collar pinned on the end of the shaft.

For independent operation of the two brakes it is essential that the right-hand pedal is free to pivot on the cross shaft; the pedal boss should therefore be periodically lubricated through the grease nipple.

The hand brake is connected directly to the cross shaft by means of an operating lever between the pedal bosses. The operating lever has two lugs which contact the pedal bosses and to enable the two pedals to be aligned the right-hand pedal has an adjusting screw which should be set so that when the hand brake is applied the pedal locking catch remains in line with the slot in the opposite pedal.

The brake-shoe camshafts are supported in two bushes in the axle case. These bushes are self-lubricating and may be driven out with a suitable drift when the camshaft has been removed.

The shoe fulcrum pins are screwed into the axle case and if removed the threads should be cleaned and smeared with Loctite before the pins are replaced to prevent any possibility of transmission oil leaking along the threads and to prevent the pins becoming loose during service.

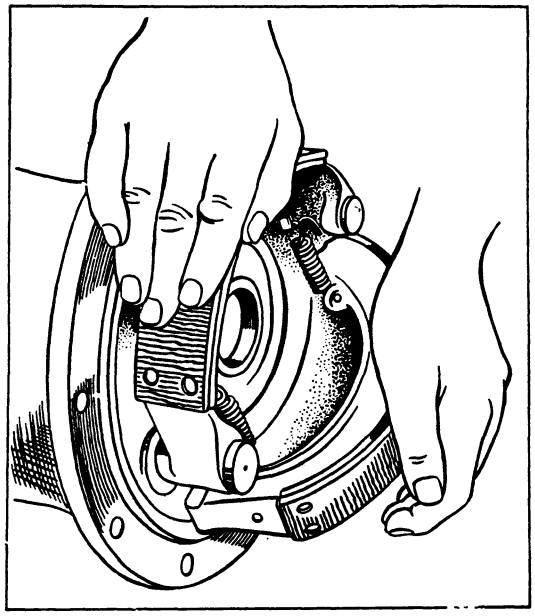

Figure 37. REMOVING THE BRAKE SHOES

Relining the Brake Shoes

After removing the reduction units (see Page 23) to expose the brake mechanism remove the brake shoes, taking care not to over-stretch the springs (Fig. 37).

Remove the rivets from the brake shoes by drilling out the open portion of the shank, then punching out. Clean the shoes and fit new linings, ensuring that these fit close to the shoes and are not contaminated with oil or grease.

If the brake shoes are re-lined because of oil contamination the cause of the oil leakage must be rectified to prevent a recurrence. If thick oil leaks on to the brake shoes this will be from the reduction unit and the brake drum should be removed from spur pinion shaft and the shaft oil seal renewed (see Page 25). As it is possible for oil to by-pass the seal by leaking along the shaft inside the collar, remove the collar, degrease the shaft and collar, then smear the shaft with Loctite and press the collar into position. Do not use Loctite on 770 tractors as this will make the collar difficult to remove, but fit a new 'O' ring in the groove inside the collar.

If transmission oil leaks on to the brakes, the oil seal housing should be withdrawn from axle case and the seals renewed (see Page 23).

Examine brake drums before refitting the reduction units. If the drums are excessively scored or worn they should be renewed or reground, otherwise excessive lining wear may take place.

Four-Wheel Braking System

This is an optional fitting on 880 tractors and on 990 tractors with heavy duty front axles. The rear brakes are as on standard tractors but are both operated by a single pedal and cannot, therefore, be applied independently to assist steering. The front-wheel brakes are hydraulically operated by a master cylinder mounted beneath the right-hand footplate.

The foot-pedal pivots freely on the brake cross-shaft and operates the brakes through a compensating lever. One end of the compensating lever contacts the brake cross-shaft lever, so operating the rear brakes, and the other end is connected to the front brake master cylinder by a push-rod. As the compensating lever is free to pivot on the pedal, this mechanism ensures that the front and rear brakes are applied evenly.

The compensating lever passes through a slot in the pedal and this slot limits the angle through which the compensating lever can pivot, thus ensuring that the rear brakes will operate in the event of hydraulic failure in the front brakes. The hand-brake operating lever contacts the brake cross-shaft lever and operates the rear brakes only.

The hydraulic pipe-line from the master cylinder passes down right-hand side of tractor and then along the front axle to each wheel. Flexible pipes are used from main frame to front axle and from front axle to each wheel. A pressure switch is fitted in the pipe-line between front axle and master cylinder to enable brake lights to be operated.

Brake Adjustment

As the brake linings wear during service the brake pedal travel will increase. When pedal travel becomes excessive adjust the brakes as follows:

1. Jack the rear wheels clear of ground and, with hand-brake in the "off" position, tighten brake rod adjuster nut until brake starts to bind then unscrew until the wheel revolves freely.
2. Apply hand-brake until wheel can just be turned then tighten adjusting nut on the other side until resistance to turning is equal on both wheels. Release hand-brake and check that

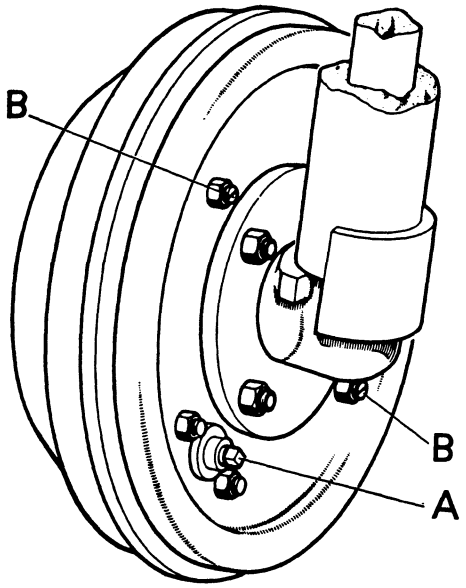

Figure 38. FRONT WHEEL BRAKE ADJUSTMENT
A. Brake adjuster B. Brake shoe steady post

wheels revolve freely then hold the adjusting nuts stationary and tighten locknuts.

3. Lower rear wheels on to ground and jack front wheels clear of ground.
4. Turn the square-headed adjuster on inside of back-plate (Fig. 38) clockwise until brake starts to bind, then unscrew two "clicks". Check that wheel rotates freely then adjust the opposite side brake in the same manner. As the front brakes are hydraulic, and therefore fully compensating, it is not necessary to balance the adjustment. Do not attempt to adjust brakes by means of the two slotted studs on the back-plate. These are the brake shoe steady posts and must not be disturbed.
5. Check level in fluid reservoir and top up if necessary. Lubricate pedal pivot and compensator lever through the three grease nipples.
6. Road test and check the brakes for satisfactory operation.

Setting the Brake Linkage

Once set, the linkage should not normally require any adjustment, the adjustment for lining wear being all that is required, but if the linkage has been disturbed re-set as follows:

1. Place hand-brake in the "off" position. The spring on brake pedal should then hold the pedal in its rearmost position, i.e., up against the footplate. Release locknut on hand-brake operating-lever adjusting screw and tighten adjusting screw as far as possible.
2. Adjust the length of master cylinder push-rod so that when the right-hand end of the compensator lever is held rearwards to take up the play in push rod ends, the compensator lever is at right-angles to centre line of brake pedal.
3. Unscrew adjusting screw in hand-brake operating lever until the clearance between cross-shaft lever and end of the compensator lever is reduced to 0·30 in. (0·76 mm), then tighten the locknut.
4. Adjust front and rear brakes as described previously.

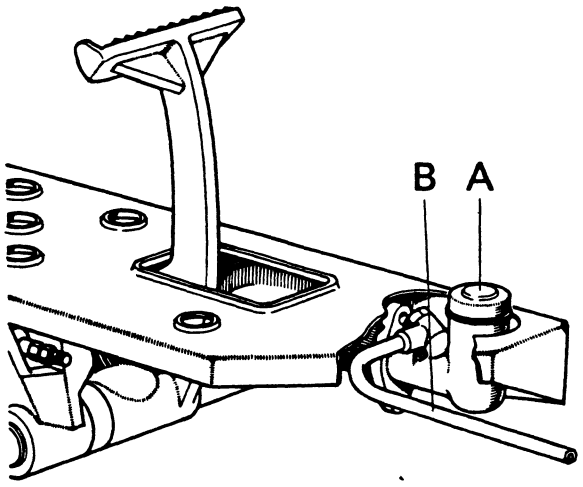

Figure 39. FRONT BRAKE MASTER CYLINDER
A. Filler cap B. Outlet pipe

Venting the Hydraulic Braking System

If the level of fluid in master cylinder reservoir is allowed to fall too low, or if any part of the system has been disconnected, the brake pedal will be "spongy" due to air being present in system. It will be necessary to remove this air-lock by venting the system at wheel cylinders (left-hand first and then right-hand). The sequence is as follows:

1. Remove rubber dust cover and attach a length of rubber tubing to wheel-cylinder vent screw. Place lower end of tube in glass jar containing a small amount of brake fluid. The end of the tube must be kept submerged in the fluid.
2. Slacken vent screw and slowly pump the brake pedal, pausing at end of each stroke, until the fluid issuing from tube shows no sign of air bubbles.
3. Tighten vent screw, taking care to hold tube under surface of the fluid.
4. The fluid in the reservoir must be replenished throughout venting to prevent another air-lock being formed. Carry out the above procedure on both wheels. Finally, check the vent screws for tightness, replace dust covers and top up the reservoir to the correct level. Only Girling crimson brake fluid should be used.

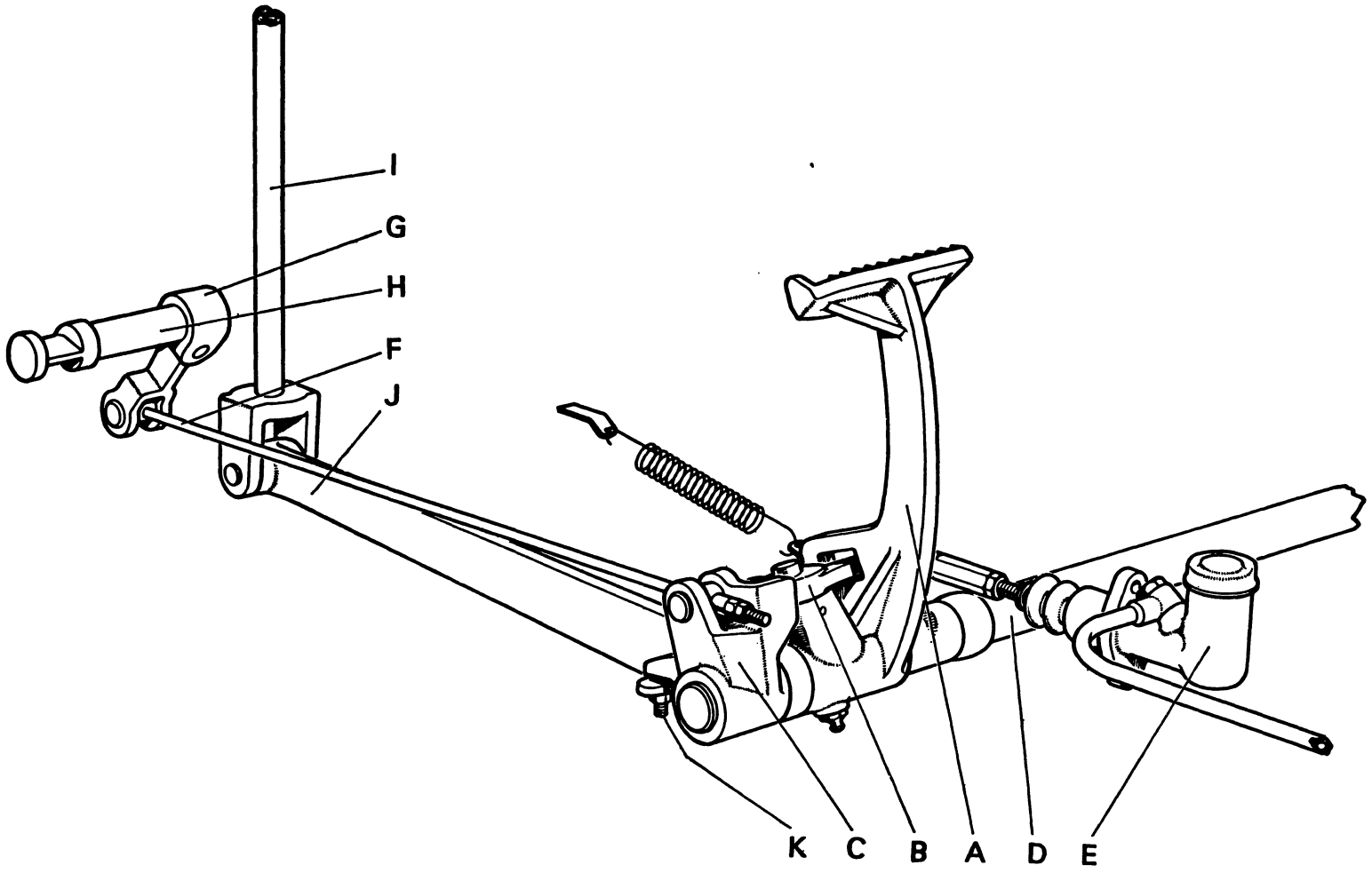

Figure 40. FOUR-WHEEL BRAKE MECHANISM

A. Brake pedal
B. Compensator lever
C. Cross shaft lever
D. Cross shaft
E. Master cylinder
F. Brake rod
G. Camshaft lever
H. Brake camshaft
I. Handbrake lever
J. Handbrake operating lever
K. Adjusting screw

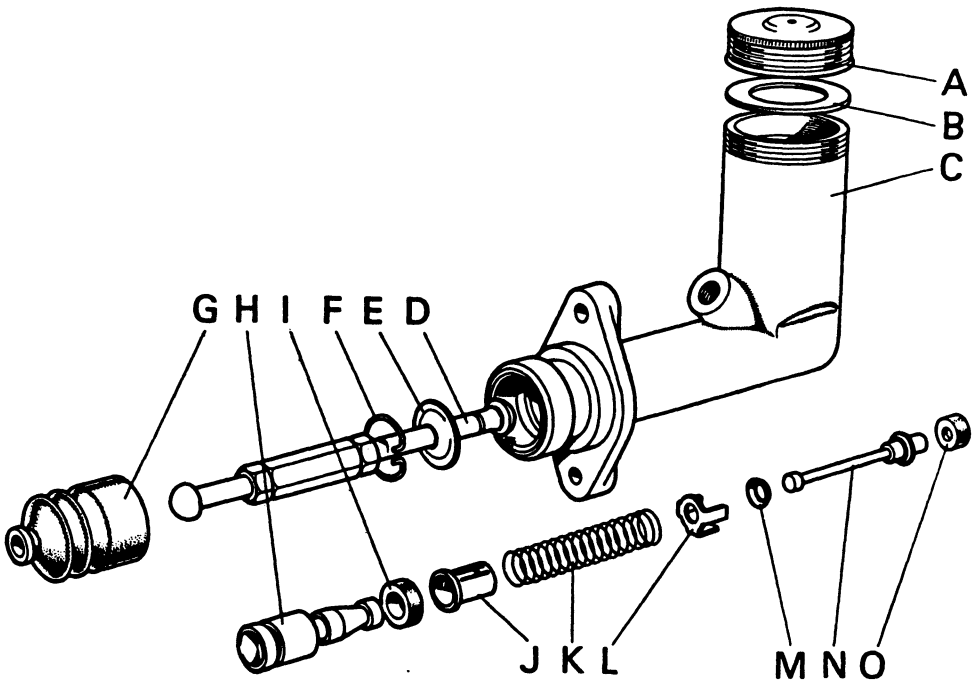

Figure 41. FRONT BRAKE MASTER CYLINDER

A.	Filler cap	B.	Washer	C.	Cylinder body	D.	Push rod	E.	Retaining washer
F.	Circlip	G.	Dust cover	H.	Plunger	I.	Plunger seal	J.	Thimble
K.	Spring	L.	Spacer	M.	Spring washer	N.	Valve stem	O.	Valve seal

Dismantling Front Brake Assembly

1. Jack up front axle and remove wheel.
2. Slacken shoe adjuster (anti-clockwise), remove the two drum locating screws and withdraw brake drum from hub.
3. Remove the two brake shoes and springs. If wheel cylinder is not to be dismantled, e.g., when re-lining brake shoes, retain pistons in cylinder by wiring round the cylinder.
4. Remove adjuster plungers, clean them, and retain for fitting in the same position.
5. If cylinder is to be dismantled, disconnect flexible hose from wheel cylinder and secure the loose end above the level of master cylinder to prevent undue loss of fluid. Remove cylinder from back-plate.
6. Remove dust covers, pistons and vent screw.

Reassembling

1. Clean all wheel cylinder components by washing in brake fluid and examine for damage. Renew where necessary. **Do not wash brake components in diesel fuel, petrol or paraffin** as this will contaminate the rubber seals and shorten their life.
2. Refit vent screw.
3. Refit pistons, etc., with new seals. Renew dust covers as required. Care must be taken not to contaminate seals, pistons, etc., with oil. The only lubricants used should be the special rubber lubricant supplied in the seal kit or brake fluid.
4. Fit wheel cylinder to back-plate. Reconnect flexible pipe. On 880 tractors the single-piston wheel cylinder must slide freely on the back-plate. On 990 tractors the bolts holding the double-piston cylinder should be left slack until the brake drum is fitted.
5. Replace adjuster plungers. If these are replaced correctly the slots in plungers will line up with brake shoes when the plungers are pressed down firmly on to the adjusting wedge.
6. If necessary, re-line the brake shoes and then replace together with the springs.
7. Examine brake drum for scoring and ovality and re-grind if required. Maximum amount which can be removed is 0·030 in. (0·75 mm). Replace brake drum and fit the two locating screws. On 990 tractors screw in the adjuster until the drum is locked. This will centralise the wheel cylinder so that the bolts holding wheel cylinder to back-plate can be tightened.
8. Top up reservoir and vent the system.
9. Replace the wheel and adjust brake shoes as described above.

Servicing the Master Cylinder

1. Disconnect master cylinder push-rod by unscrewing adjusting sleeve.

2. Disconnect hydraulic pipe-line from master cylinder.
3. Unscrew the two mounting bolts and remove master cylinder.
4. Remove dust cover and release circlip retaining the push-rod and piston assembly. Withdraw piston, spring and valve stem, etc.
5. Clean piston and cylinder by washing in brake fluid. **Do not wash components in diesel fuel, petrol or paraffin** as this will contaminate the rubber seals and shorten their life.
6. Fit new seals to piston and reassemble the piston and push-rod in cylinder; replace the retaining circlip and dust cover.
7. Fit master cylinder to tractor and reconnect pipe and push-rod.
8. Readjust the push-rod length as described under "Adjustment" and then top up the reservoir and vent the system.

DIMENSIONAL DATA

990 and 880 Gearbox

Bevel pinion shaft bearing clearance (six- and twelve-speed)	0·002—0·004 in (0·05 —0·10 mm)
Layshaft bearing clearance (six- and twelve-speed)	0·002—0·004 in (0·05 —0·10 mm)
Main driveshaft end-float	0·006—0·010 in (0·15 —0·25 mm)
Creeper layshaft bearing clearance (twelve-speed)	0·001—0·003 in (0·025—0·076 mm)
Thrust washer clearance (twelve-speed):	
Creeper drive gear, minimum	0·015 in (0·38 mm)
Creeper driven gear, minimum	0·015 in (0·38 mm)
Differential side bearing clearance	0·000—0·002 in (0·00 —0·05 mm)
Crown wheel backlash	0·007—0·009 in (0·178—0·229 mm)
Muff coupling end-float (six-speed)	0·010—0·04 in (0·25 —1·0 mm)
Gearbox mounting clearance: vertical	0·016—0·021 in (0·40 —0·53 mm)
lateral	0·008—0·012 in (0·20 —0·30 mm)

770 Gearbox

Bevel pinion shaft bearing clearance	0·001—0·003 in (0·025—0·076 mm)
Main layshaft bearing clearance	0·010—0·015 in (0·25 —0·38 mm)
Creeper layshaft end-float	0·005—0·012 in (0·13 —0·30 mm)
Driveshaft end-float	0·006—0·010 in (0·15 —0·25 mm)
Differential side bearing clearance	0·000—0·002 in (0·00 —0·05 mm)
Crown wheel backlash	0·007—0·009 in (0·178—0·229 mm)
Muff coupling end-float	0·010—0·040 in (0·25 —1·0 mm)
Gearbox mounting clearance: vertical	0·016—0·021 in (0·40 —0·53 mm)
lateral	0·008—0·012 in (0·20 —0·30 mm)

Reduction Units — 990, 880 and 770 Tractors

Spur pinion shaft bearing pre-load	0·001—0·003 in (0·025—0·076 mm)
Final driveshaft bearing pre-load	0·005—0·007 in (0·127—0·178 mm)
Final drive gear backlash	0·006—0·010 in (0·15 —0·25 mm)

Brakes

Drum diameter (new) — rear	8·505 in (216·03 mm)
Drum diameter (maximum re-grind) — rear	8·565 in (217·55 mm)
Drum diameter (new) — front (12-inch brakes)	12·005 in (304·93 mm)
Drum diameter (maximum re-grind) — front (12-inch brakes)	12·065 in (306·45 mm)
Drum diameter (new) — front (10-inch brakes)	10·005 in (254·13 mm)
Drum diameter (maximum re-grind) — front (10-inch brakes)	10·065 in (255·65 mm)

Tightening Torques

Gearbox mounting bolts	100 lb ft (13·83 kg metres)
Spacer bar nuts	70 lb ft (9·67 kg metres)
Pinion thrust bearing housing bolts	30 lb ft (4·15 kg metres)
Crown wheel attachment bolts	50 lb ft (6·92 kg metres)
Differential cover bolts	30 lb ft (4·15 kg metres)
Differential bearing cap bolts	120 lb ft (16·6 kg metres)
Gearbox pinion nut — 990 and 880 tractors	200 lb ft (27·6 kg metres)
Gearbox pinion nut — 770 tractor	150 lb ft (20·7 kg metres)
Creeper layshaft nut	150 lb ft (20·7 kg metres)
Rear axle to main frame bolts — 990 and 880 tractors	55 lb ft (7·6 kg metres)
Rear axle to main frame bolts — 770 tractor	45 lb ft (6·2 kg metres)
Reduction units to rear axle case bolts — 990 and 880 tractors	75 lb ft (10·5 kg metres)
Reduction units to rear axle case bolts — 770 tractor	45 lb ft (6·2 kg metres)
Transmission sump bolts	15 lb ft (2·1 kg metres)
Reduction case cover bolts — 990 and 880 tractors	30 lb ft (4·15 kg metres)
Reduction case cover bolts — 770 tractor	25 lb ft (3·46 kg metres)
Reduction case seal housing bolts	50 lb ft (6·92 kg metres)
Rear wheel nuts	110 lb ft (15·21 kg metres)

SUMMARY OF DESIGN CHANGES

Details of change	When introduced
Rear wheel fixing changed from six-bolt to eight-bolt. Part No. of final driveshaft changed from 910603 to 916494. Final driveshafts and wheel centres are not interchangeable.	990/482936 (March 1966)
Pre-load of spur pinion shaft bearings increased to 0·001—0·003 in. (0·025—0·076 mm) and pre-load of final driveshaft bearings increased to 0·005—0·007 in. (0·127—0·178 mm) pre-load.	990/491127 880/535724 770/584761 (September 1966)
Number of bolts attaching end-plate (903184) to differential cage (908780) increased from six to nine and length of dowels (14542) increased from $\frac{3}{4}$ in. (19·0 mm) to $1\frac{1}{8}$ in. (28·5 mm). Part Nos. of end-plate and cage are unchanged but the new dowels (621801) can only be used with a cage to the latest change.	990/491369 880/535881 770/584947 (September 1966)
Location of differential pin (30233) changed from split pins to circlips and differential pinions (15020) fitted with bushes. The new pin (916863), which is free to revolve in the differential cage, is interchangeable with the previous pin and the new pinion and bush assembly (910465) is interchangeable with the previous pinion.	990/491369 (September 1966)
Material of gear lever dirt excluder changed from rubber to neoprene. The new dirt excluder (917375), which is also a slightly different shape, is interchangeable with the previous excluder (903932).	All models (October 1966)
Differential-lock pedal pivot pin increased in length so that pedal can be retained with spring pin instead of circlip used previously. Part No. of pivot pin (907643) changed to 919577 and this is interchangeable with previous pin if spring pin (690976) is also fitted.	990/492888 880/536714 770/585295 (October 1966)
Differential bearing cap studs, Part No. 608604, replaced by bolts 601240. Tabwasher, 11590 replaced by tabwasher, 626389. Studs and bolts are interchangeable but tabwasher 11590 should be used with studs and tabwasher 626389 used with bolts.	990/498101 880/540745 770/587310 (March 1967)

SYNCHROMESH TRANSMISSION

885, 990, 995 and 996 Tractors

Written In *Clear And Simple English*

CASE CORPORATION

Pub 9-37142

Printed in U.S.A.

CONTENTS

SECTION	DETAILS	PAGE
Introduction		C3/1
Methods of Removing the Gearbox		C3/2
Special Tools		C3/3
Removing the Gearbox: Method A		C3/9
Removing the Gearbox: Method B		C3/12
Installing the Gearbox: Method B		C3/12
Replacing the Oil Filter		C3/14
Installing the Gearbox: Method A		C3/14
Disassembly of the Gearbox:		
	Introduction	C3/18
	Disassembly	C3/18
Inspection of Parts		C3/21
Adjustments before Assembling the Gearbox:		
	Auxiliary Layshaft	C3/23
	Layshaft Bearings	C3/23
Gear and Range Levers:		
	Removing	C3/24
	Installing	C3/24
	Dirt Excluders	C3/24
Assembling the Gearbox		C3/25
Differential:		
	Disassembly	C3/28
	Assembly	C3/28
	Bevel Pinion Adjustments	C3/30
	Spiral Gear Adjustments	C3/32
Reduction Units:		
	Removing and Installing	C3/33
	Disassembly	C3/35
	Spur Pinion Shaft	C3/36
	Final Drive Shaft	C3/37
Rear Axle Case Oil Seals		C3/39
Reduction Case Breather		C3/39
Data		C3/40

SYNCHROMESH GEARBOX, 8 AND 9 SERIES TRACTORS

Introduction

The gearbox is made from two end plates fastened together by four spacer bars. The gear shafts are kept in position by taper roller bearings. The taper roller bearings are installed in the end plates and can be adjusted by shims. On Livedrive tractors the gearbox drive shaft is hollow. This permits the installation of the cardan shaft which turns the power take-off unit. The bevel pinion and the gearbox output shaft are made in one piece. The differential and bevel wheel are installed on the rear end plate. Using this arrangement, the gearbox and differential can be assembled as a unit. The unit can then be installed in the tractor.

The six speed gearbox is a high range gearbox and a low range gearbox. The range needed can be selected by the range lever to change the gear ratio of the layshaft. There are three forward and one reverse gear in each range. The gear needed can be selected by the main gear lever. The twelve speed gearbox is a six speed gearbox with an auxiliary reduction gear installed on the front end plate. This reduction gear can be engaged by the range lever. When the auxiliary reduction gear is disengaged, the gearbox becomes a normal six speed gearbox.

Methods of Removing the Gearbox:

There are two ways of removing the gearbox.

Method A
This procedure must only be used for six speed gearboxes. It is done by removing the reduction units and lifting the gearbox up out of the main frame.

Method B
This procedure must be used for twelve speed gearboxes and can also be used for six speed gearboxes. It is done by separating the rear axle case and the main frame and removing the gearbox toward the rear of the tractor.

SPECIAL TOOLS

Tool	Illustration	Page
Gearbox support	1	C3/4
Tool for Compression of Detent Springs	2	C3/4
Tool for checking the Depth of Spring holes	3	C3/4
Differential Bearing Remover	4	C3/5
Tool for Removing Oil Seal Housing	5	C3/5
Tool for Removing the Brake Drum	6	C3/6
Modification to Brake Drum Removing Tool	7	C3/6
Pinion Setting Gauge	8	C3/7
Tool for Replacing Differential Lock	9	C3/7
Tool for Removing Final Drive Shaft	10	C3/8

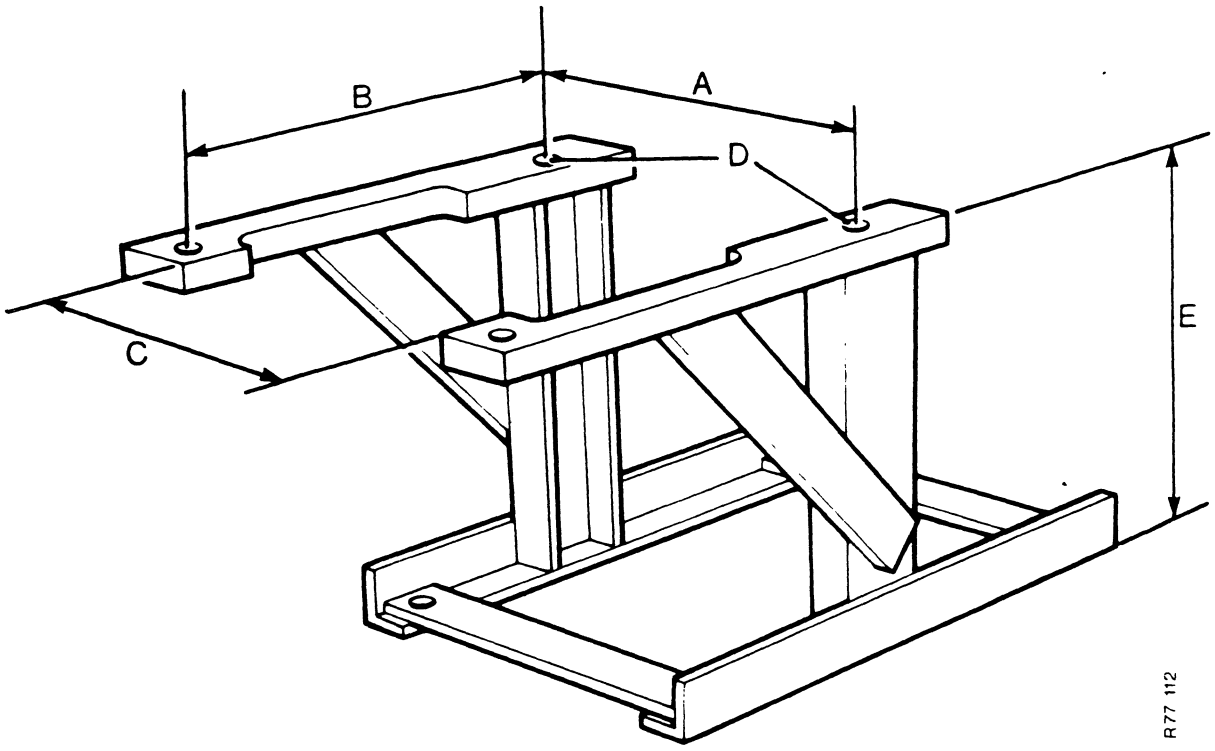

Figure 1 GEARBOX SUPPORT

A. 321 mm (12⅝ in) **B.** 351 mm (13 13/16 in) **C.** 295 mm (11⅝ in)
D. ⅝ BSF tapped holes **E.** 304 mm (12 in)

Note It is essential that the two side supports are correctly aligned

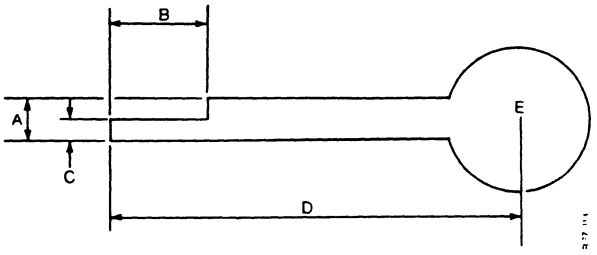

Figure 2
TOOL FOR COMPRESSING DETENT SPRINGS

A. 9·5 mm (⅜ in)
B. 15·9 mm (⅝ in)
C. 4 8 mm (3/16 in)
D. 150 mm (6 in)
E. Gear lever knob

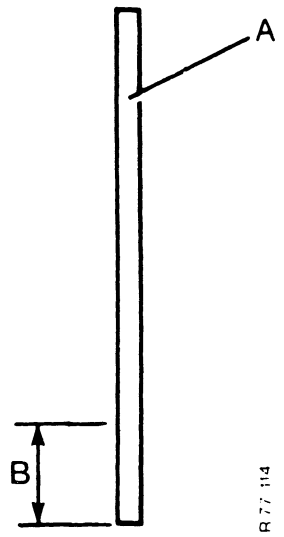

Figure 3
TOOL FOR CHECKING DEPTH OF DETENT SPRING HOLES

A. Round bar 10 mm (⅜ in) diameter
B. 27 94 mm (1·10 in)

Part No. K960605 DIFFERENTIAL BEARING REMOVER

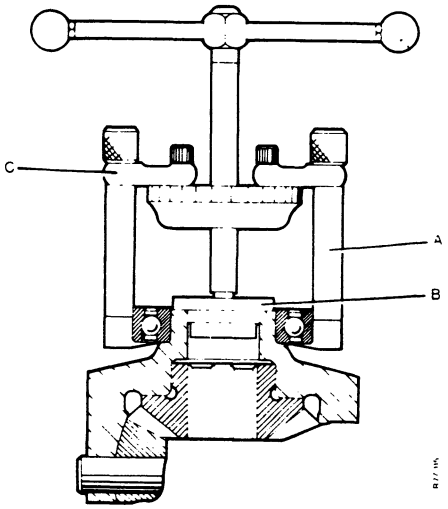

N.B.—This tool is used in conjunction with Churchill No. 55 puller.

This tool consists of:—

A. Two special claw legs

B. A thrust pad

C. Two adjustable arms

Figure 4

Part No. K900208 REAR AXLE OIL SEAL AND OIL SEAL HOUSING EXTRACTOR

Note. Use with K900207

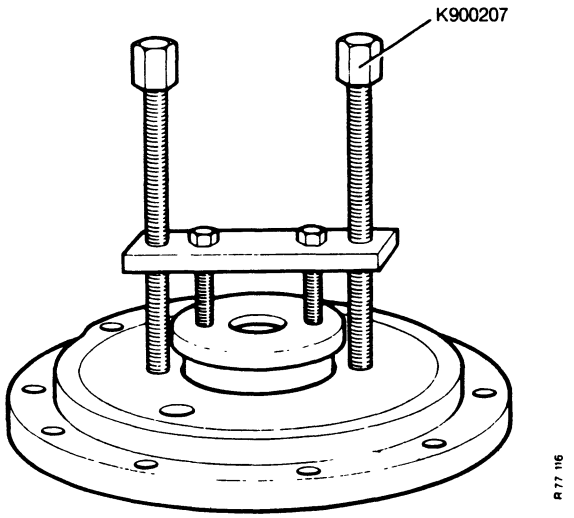

Figure 5

Part. No. K960618 BRAKE DRUM REMOVER AND REPLACER

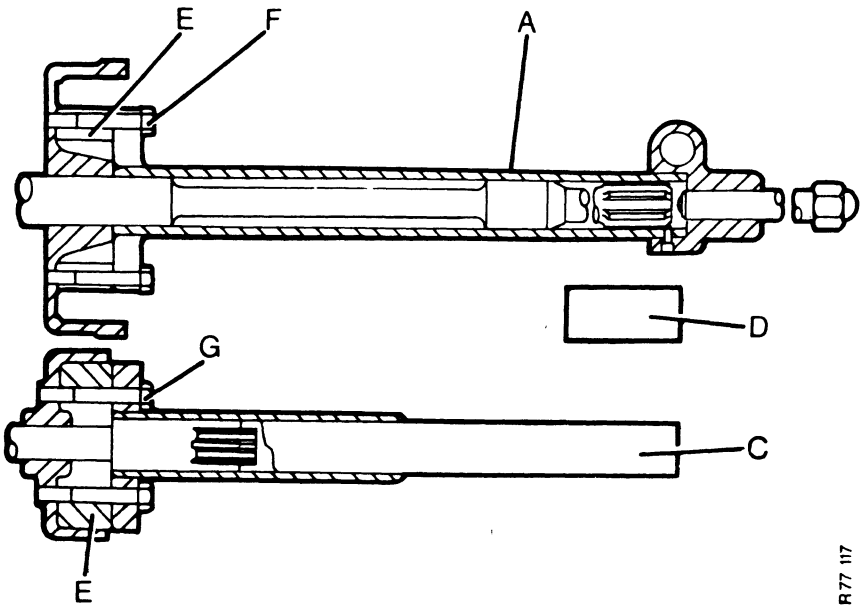

Figure 6

A. Main tool
B. Large tommy bar (not shown)
C. & D. Two distance pieces
E. Annular spacer
F. Two $\frac{1}{2}$ in BSF bolts
G. Two $\frac{3}{8}$ in BSF bolts

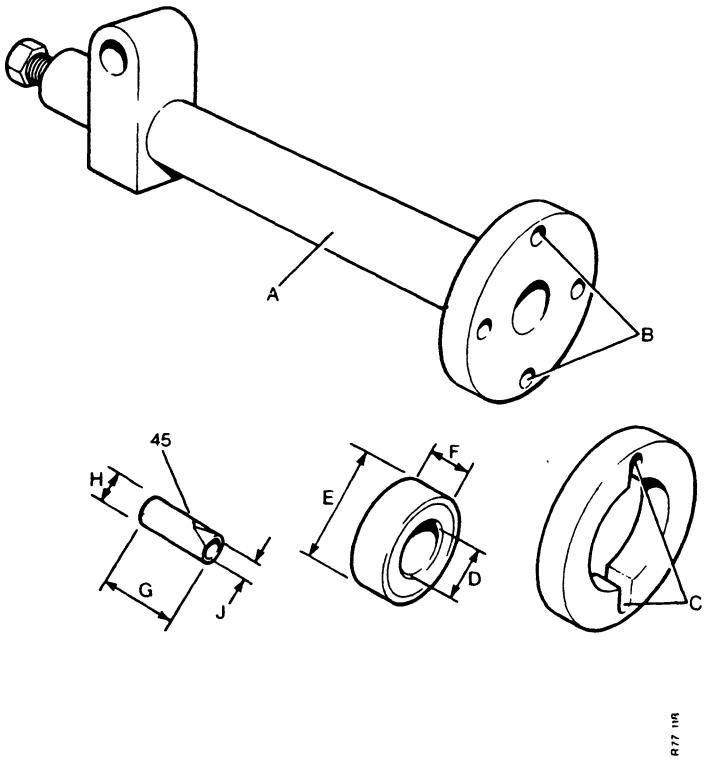

Figure 7
MODIFICATIONS TO
BRAKE DRUM REMOVER

A. Service tool 960618
B. Additional pair of 13·5 mm ($\frac{17}{32}$ in) dia holes at 104·8 mm ($4\frac{1}{8}$ in) centres
C. Holes in distance piece converted into 13·5 mm ($\frac{17}{32}$ in) wide by 7·9 mm ($\frac{5}{16}$ in) deep slots
D. 47·6 mm ($1\frac{7}{8}$ in) } Collar
E. 82·5 mm ($3\frac{1}{4}$ in) } Collar
F. 44·5 mm ($1\frac{3}{4}$ in) } Collar
G. 88·9 mm ($3\frac{1}{2}$ in) } Distance tube (two required)
H. 22 2 mm ($\frac{7}{8}$ in) } Distance tube (two required)
J. 14 3 mm ($\frac{9}{16}$ in) } Distance tube (two required)

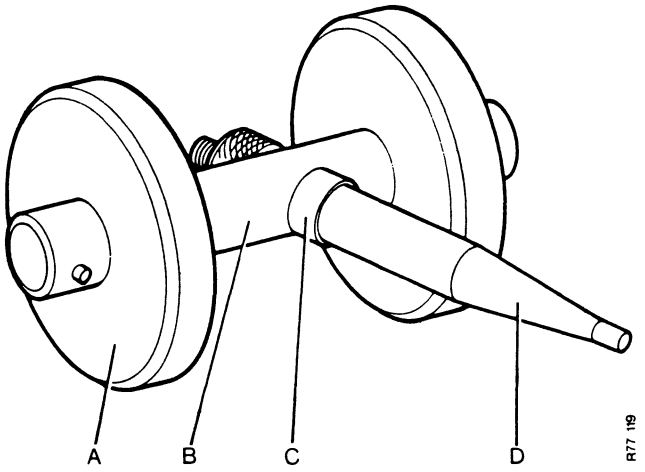

Figure 8
PINION SETTING GAUGE
(Service Tool DB 8208)

A. Dummy bearings **B.** Mandrel
C. Spacer **D.** Probe

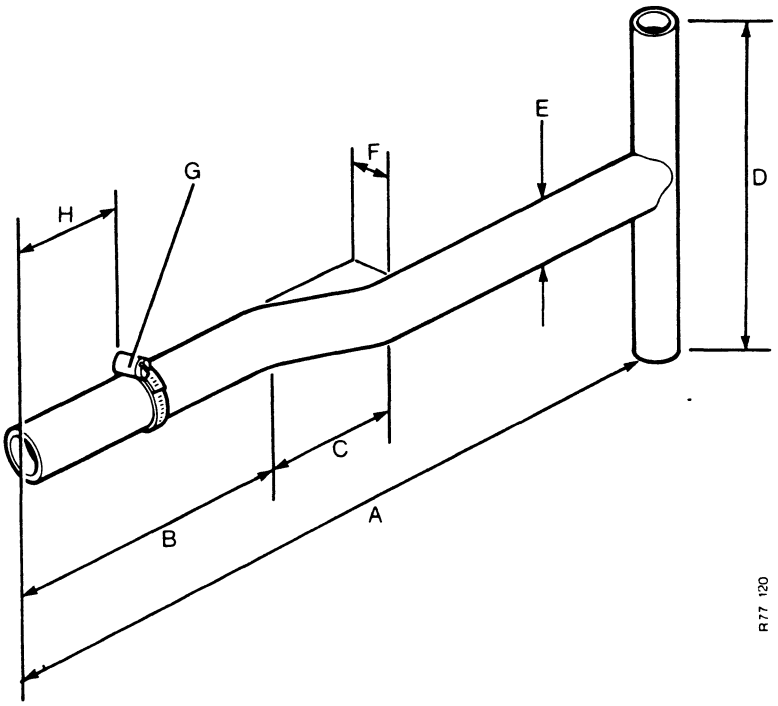

Figure 9 TOOL FOR REPLACING DIFFERENTIAL LOCK SLEEVE

A. 609·6 mm (24 in) **B.** 228·6 mm (9 in) **C.** 101·6 mm (4 in)
D. 304·8 mm (12 in) **E.** 38·1 mm ($1\frac{1}{2}$ in) **F.** 25·4 mm (1 in)
G. Hose clip **H.** 103·2 mm ($4\frac{1}{16}$ in)

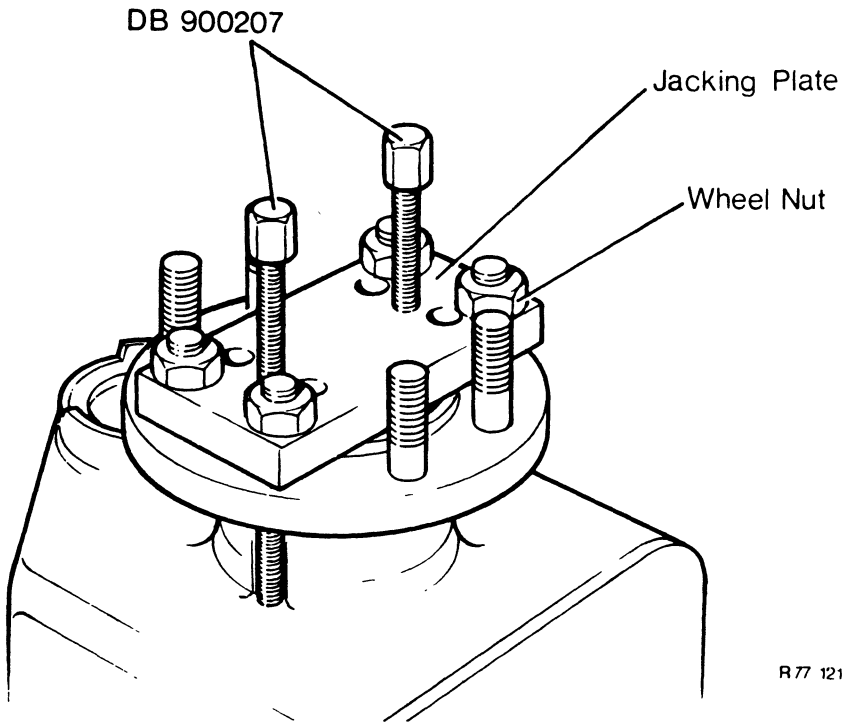

Figure 10 TOOL FOR REMOVING FINAL DRIVE SHAFT

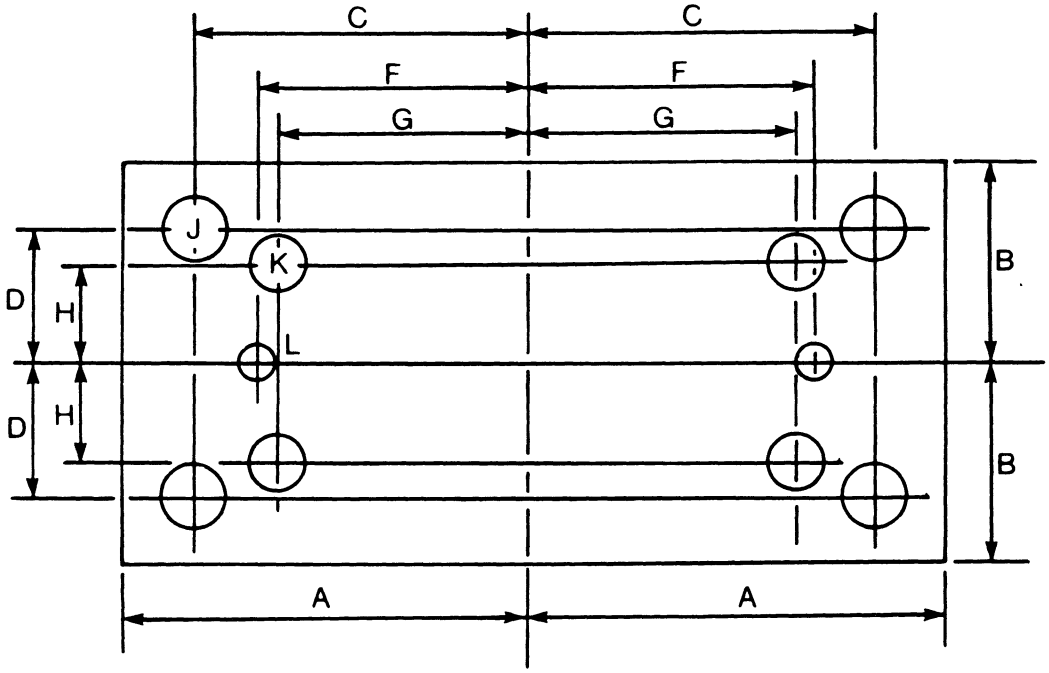

Figure 11 DIMENSIONS OF JACKING PLATE

R77 122

Material — Steel plate 12 mm ($\frac{1}{2}$ in) thick.

Dimensions

A. 114·3 mm ($4\frac{1}{2}$ in)
B. 57·1 mm ($2\frac{1}{4}$ in)
C. 93·7 mm ($3\frac{11}{16}$ in).
D. 38·9 mm ($1\frac{17}{32}$ in).
E. 85·7 mm ($3\frac{3}{8}$ in).
F. 76·2 mm (3 in).
G. 70·6 mm ($2\frac{25}{32}$ in).
H. 29·4 mm ($1\frac{5}{32}$ in).
J. Drill 4 holes 20·5 mm ($\frac{13}{16}$ in) dia.
K. Drill 4 holes 17·5 mm ($\frac{11}{16}$ in) dia.
***L.** Drill 2 holes 11·1 mm ($\frac{7}{16}$ in) dia. and tap $\frac{1}{2}$ – 16 BSF.

*Alternatively if BSF taps are not available, thread to suit jacking bolts, minimum 12 mm ($\frac{1}{2}$ in) dia.

Removing the Gearbox (Method A)

1. Clean the outside of the tractor.
   NOTE: To do the next jobs you will need clean containers with covers. Make sure that the containers will hold all the fuel from the fuel tank. Use a separate container which will hold a minimum of 40 litres (5 gal) for the transmission oil.
2. Remove the fuel from the fuel tank.
3. Remove the oil from the transmission casing.
4. Disconnect:
   The battery cables.
   The drive for the engine speed indicator.
   The throttle linkage.
   The fuel pipes from the fuel tank.
5. Remove:
   The bracket for the engine stop control from the steering box.
   The fuel tank with the instrument panel.

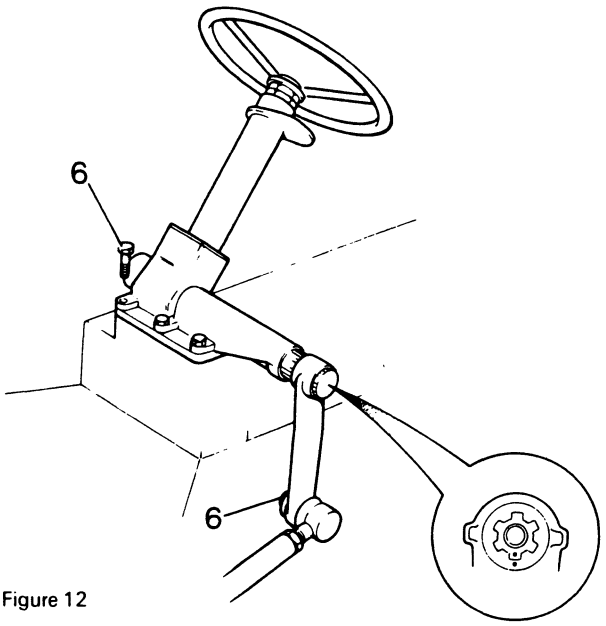

Figure 12

R77 123

Tractors with Manual Steering

6. Remove the bolts which fasten the steering box to the main frame.
   Disconnect the drag link from the steering drop arm.
   Remove the steering assembly.
   NOTE: Do not turn the steering wheel after the steering assembly has been removed.

Tractors with Hydrostatic Steering

7. Remove the oil from the steering reservoir.
8. Disconnect the inlet pipe from the steering pump.
9. Disconnect the four pipes which are fastened to the steering valve.
   Make sure that you can connect the pipes correctly by putting a mark on each pipe.

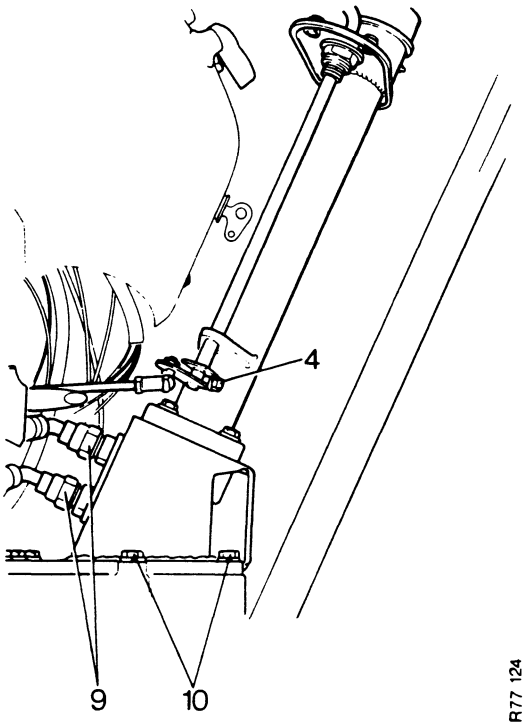

R77 124

Figure 13

10. Remove the support bracket with the steering column and the steering valve.
    NOTE: Do not turn the steering wheel after the steering column has been removed.
11. Remove:
    The tractor seat and support bracket. The bolts which fasten the gearbox cover to the clutch housing.
    The wedge fitted between the gearbox cover and the clutch housing.
    The bolts which fasten the gearbox cover to the main frame and the rear axle casing.
    The gearbox cover.
12. Put a support below the drawbar frame.
    Remove the bolts which fasten the drawbar frame to the hitch.
    Remove the support and lower the drawbar frame to the ground.
13. Disconnect the sensing unit cable.
    Remove the sensing unit.
14. Use a hoist to hold the PTO in position.
    Remove the vacuum switch adaptor.
    Remove the bolts which fasten the PTO to the rear axle casing.
    Install two guide studs into horizontally opposite holes in the rear axle casing.
    Pull the PTO away from the rear axle casing.
    Lower the PTO to the ground.
    Pull the cardan shaft out of the gearbox.
15. Use a 5 ton jack to raise the back of the tractor.
    Put a support below each side of the rear axle casing.
16. Loosen the adjusting nuts on both brake rods.
    Remove both reduction units. See Section: Removing the Reduction Units.

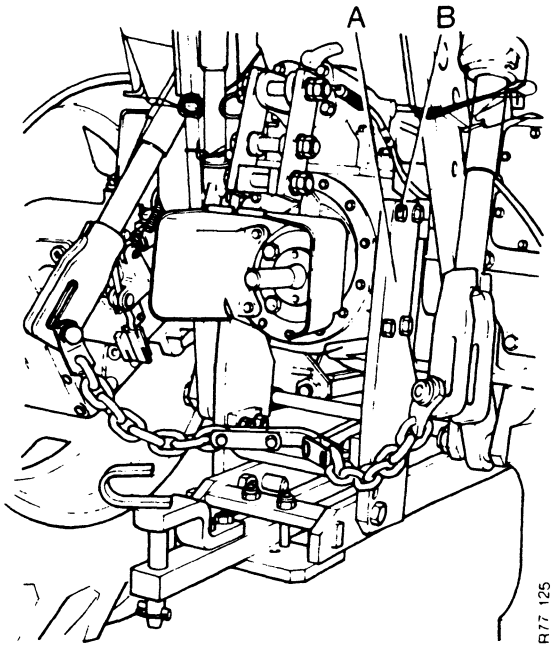

Figure 14

A. Hitch Plate
B. Setscrews (Hitch plate to PTO casing)

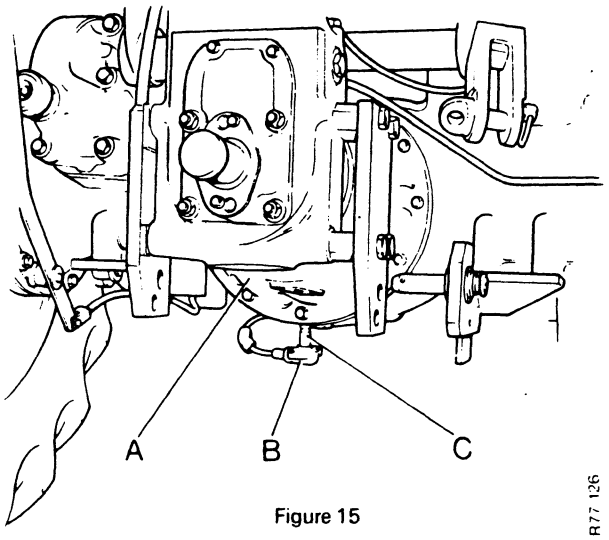

Figure 15

A. PTO case **B.** Adaptor **C.** 'O' ring — adaptor

17. Remove the oil seal housing from the right hand side of the axle casing.
    Put your hand into the axle casing and pull the differential locking sleeve and spring away from the differential.
    NOTE: If the differential locking sleeve and spring do not move easily, get assistance to move the differential lock pedal up and down.
    Continue pulling until the locking sleeve and spring are away from the differential. It is not necessary to remove the locking sleeve and spring from the axle casing.
18. Use external circlip pliers to remove the circlip from the groove in the clutch shaft. Move the circlip and the muff coupling toward the clutch until the muff coupling is away from the gearbox main shaft.
    Keep the shims which are installed between the muff coupling and the gearbox mainshaft for use when you install the gearbox.
19. Remove the lubrication pipes for the gearbox.
20. Remove the bolts and bushes which fasten the gearbox to the main frame.
21. Use a hoist to remove the gearbox from the main frame.

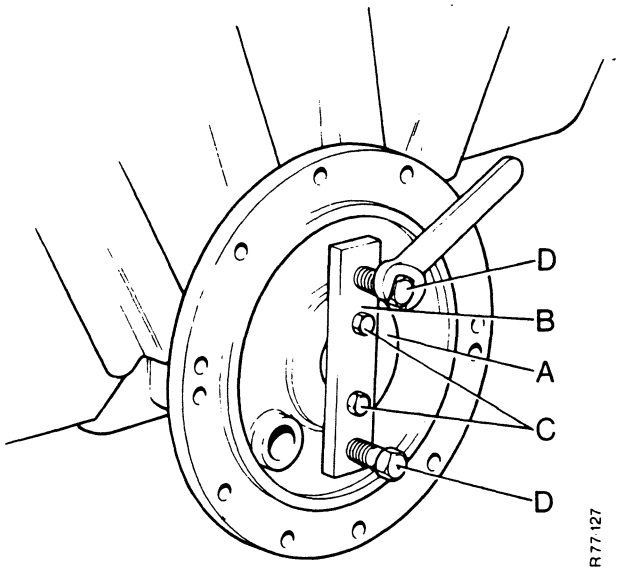

Figure 16

A. Oil seal housing
B. Bridge piece
C. Bolts into seal housing
D. Extraction bolts

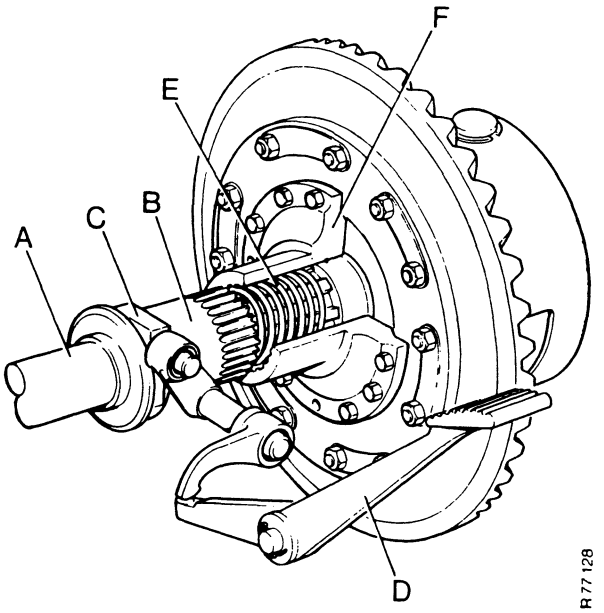

Figure 17 DIFFERENTIAL LOCK

A. Spur pinion shaft
B. Sleeve
C. Operating fork
D. Pedal
E. Return spring
F. End plate — differential cage

Removing the Gearbox (Method B)

1. See the procedure for Removing the Six Speed Gearbox.
   Do jobs 1 to 17. Then:
2. Put a mark on the lubrication pipes so that you can assemble them in the correct position.
   Remove the lubrication pipes.
3. Remove the brake adjusting nuts from both brake rods and pull the brake rods through the camshaft levers.
4. Remove the fenders.
5. Use a trolley jack as a support under the axle case.
   Remove the screws which fasten the axle case to the main frame.
   Carefully pull the axle case away from the main frame and the dowels.
   Lower the axle case to the ground.
6. Remove the bolts and bushes which fasten the gearbox to the main frame.
7. Use a hoist to remove the gearbox backwards from the main frame.
   NOTE: When the gearbox is pulled away from the clutch shaft, the thrust washer for the drive gear will fall out of position.
   Keep this washer to use when you install the gearbox.

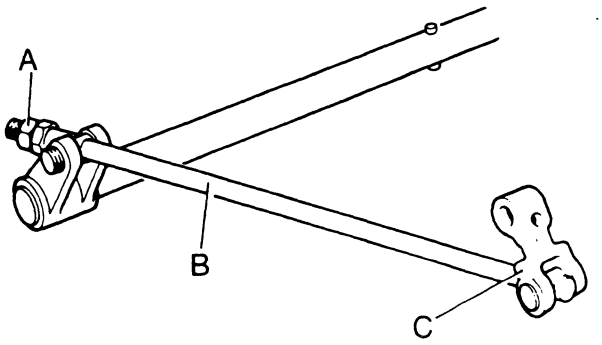

Figure 18

A. Adjusting nuts
B. Brake rod
C. Camshaft Levers

Installing the Gearbox (Method B)

Before you install the gearbox see the procedure for Replacing the Oil Filter.

1. Use a hoist to put the gearbox into the main frame.
2. Put grease on the thrust washer and install the thrust washer in the drive gear.
3. Push the gearbox into position so that the clutch shaft is engaged in the drive gear.
4. Install the mounting bolts without the bushes.

5. Tighten the bolts and check that both lugs of the front end plate are against the main frame. Do this job to make sure that the gearbox is aligned correctly.
   If the lugs are not against the main frame:
   Loosen the four $\frac{5}{8}$ in Nyloc nuts at the front of the gearbox.
   Hit the spacer bars with a soft faced hammer until the lugs are against the main frame.
   Tighten the Nyloc nuts to 9·7 kg m (70 lb ft).
6. Remove the mounting bolts and install the bushes.
   Install the mounting bolts and tighten to 13·8 kg m (100 lb ft).
7. Clean the faces of the main frame and the axle case.
   Put grease on to a new gasket and install the gasket on the main frame.
8. Use a trolley jack to raise the axle case and push the axle case in position on the dowels.
9. Install the screws and tighten to 7·6 kg m (55 lb ft).
10. See the procedure for Installing the Gearbox (Method A).
    Do jobs 8 to 27.

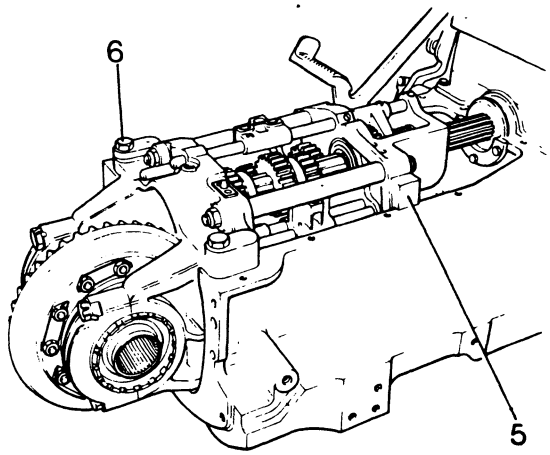

R 77.130

Figure 19

Replacing the Oil Filter

Before you install the gearbox you must:

Remove the oil filter cover, the filter screen and the filter element.

Clean inside the main frame.

Remove the old gasket from the main frame and axle casing faces.

Wash the filter gauze in new fuel oil.

Destroy the filter element and the 'O' rings.

Assemble a new filter element to the filter screen.

Using new 'O' rings, install the filter element and gauze on the oil suction pipe.

Using a new gasket, install the oil filter cover.

NOTE: Make sure that you do not cause damage to the new filter element before or during installation.

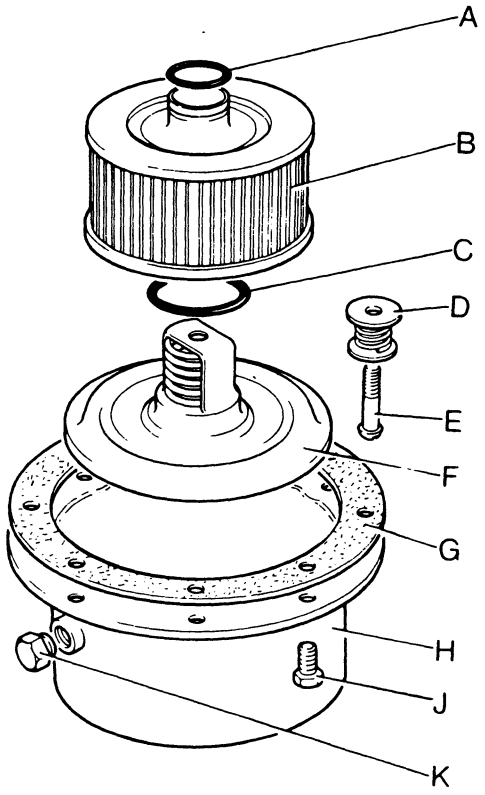

Figure 20 OIL FILTER

R 77 131

A.	'O' ring	**B.**	Filter Element
C.	'O' ring	**D.**	Magnet
E.	Screw	**F.**	Valve and Gauze
G.	Gasket	**H.**	Filter Cover
J.	Setscrew	**K.**	Drain Plug

Installing the Gearbox (Method A)

1. Install the shims on the gearbox mainshaft.
2. Use a hoist to lower the gearbox into the main frame.
3. Install the mounting bolts at the back of the gearbox without the bushes.
4. Tighten the mounting bolts and check that both lugs of the front end plate are against the main frame. Do this job to make sure that the gearbox is aligned correctly.
   If the lugs are not against the main frame:
   Loosen the four $\frac{5}{8}$ in Nyloc nuts at the front of the gearbox.
   Hit the spacer bars with a soft faced hammer until the lugs are against the main frame.
   Tighten the Nyloc nuts to 9·7 kg m (70 lb ft).
5. Remove the mounting bolts and install the two bushes.
   Install the mounting bolts and tighten to 13·8 kg m (100 lb ft).

6. Move the muff coupling toward the gearbox until the splines are engaged to the maximum. Do not use force to do this job. The splines must engage easily in any position.
7. Install the circlip in the groove in the clutch shaft and check the free movement of the muff coupling.
   The free movement must be 0·20 to 1·0 mm (0·008 to 0·040 in).
   If necessary, move the muff coupling until it is disengaged from the gearbox mainshaft and add or remove shims until the free movement is correct.
8. Remove the sharp edges from the splines of the cardan shaft.
   Push the cardan shaft through the gearbox into the clutch.
   NOTE: If this job is difficult, disengage the PTO clutch. Then push and turn the cardan shaft until it is in the correct position.
9. Install the differential locking sleeve. To do this job using the tool shown in Figure 9.
   Install the spring in the end plate.
   Put the locking sleeve on the tool with the splines away from the handle of the tool.
   Using the tool put the locking sleeve into the axle casing.
   Push the tool toward the differential until the groove of the locking sleeve is behind the inner gusset of the casing.

   NOTE: Do not permit the tool to go into the spring or it will be difficult to engage the selector fork into the groove of the locking sleeve.
   Move the selector fork until it is in alignment with the groove of the locking sleeve.
   Then turn the tool clockwise to engage the locking sleeve with the selector fork.
   Push the tool a small amount toward the differential until the end of the tool is in the spring.
   Push the tool toward the differential until the splines on the locking sleeve engage into the splines on the end plate.
   Push the pedal to engage the differential lock.
   Use wire to hold the lock in position.
   Remove the tool.

10. Before you install new oil seals in the rear axle case, check that the seal lips are toward the differential. After you have installed the oil seals put grease into the space between the oil seals. See Section: Rear Axle Case Oil Seals.
11. Use a brush to put jointing compound on to the face of the right-hand seal housing.
    Install the seal housing to the axle casing using a soft faced hammer.
12. Check the condition of the brake shoes and install new linings if necessary.
    Clean the faces of the axle casing and inside the brake drums.
    Install both reduction units. See the Section Installing the Reduction Units.
    Tighten the bolts to 10·4 kg m (75 lb ft).
13. Install both rear wheels.
14. Adjust both brakes.
15. Use a 5 ton jack to raise the back of the tractor.
    Remove the supports.
    Lower the tractor to the ground.
16. Use a hoist to install the PTO.
    Tighten the bolts to 10·4 kg m (75 lb ft).
17. Install the lubrication pipes.
18. Use a new gasket and install the gearbox cover.
    Check that the gear levers are engaged in the selectors.
    Install the bolts and tighten all the bolts to 1·4 kg m (10 lb ft).
    Tighten the bolts which fasten the cover to the axle case to 6·9 kg m (50 lb ft).
    Tighten the bolts which fasten the cover to the main frame to 6·9 kg m (50 lb ft).
    Install the wedge between the cover and the clutch housing.
    Install the bolts and tighten to 6·9 kg m (50 lb ft).

Tractors with Manual Steering

19. Install the steering assembly.
    Install and tighten the bolts which fasten the steering box to the main frame.
    Connect the drag link to the drop arm.
    Check the oil level of the steering box and add oil if necessary.

Tractors with Hydrostatic Steering

20. Install the steering column and mounting bracket.
    Connect the four pipes to the steering valves. Use the marks to put the pipes in the correct position.
    Connect the inlet pipe from the steering pump.
    Fill the steering reservoir with new oil to the correct level.
21. Fill the transmission with oil to the correct level.
    NOTE: If you use the old oil, put the oil in the transmission using a funnel with a fine filter. Destroy the last 5 litres (one gallon). Add new oil to the correct level.
22. Install:
    The fuel tank with the instrument panel.
    The bracket for the engine stop control.
23. Connect:
    The fuel pipes to the fuel tank.
    The throttle linkage.
    The drive for the engine speed indicator.
    The battery cables.
24. Install the tractor seat.
25. Fill the fuel tank with new fuel oil.
26. Start the engine.

Tractors with Hydrostatic Steering

27. Use a 5 ton jack to raise the front wheels.
    Turn the steering wheel from left to right four times to remove air from the hydraulic system.
    Check the oil level and add new oil if necessary.

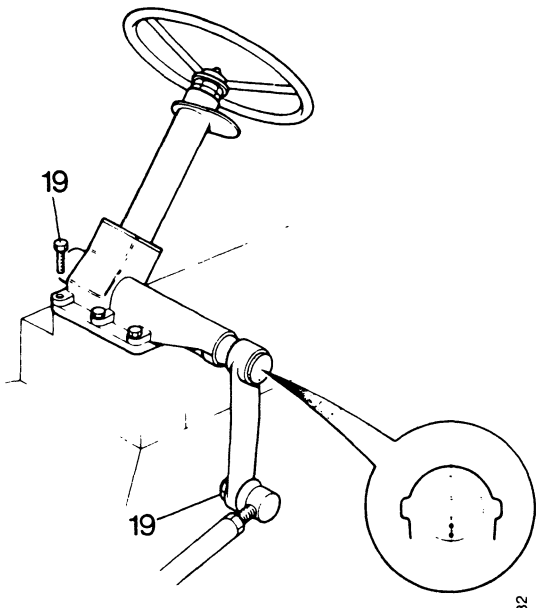

Figure 21

R77132

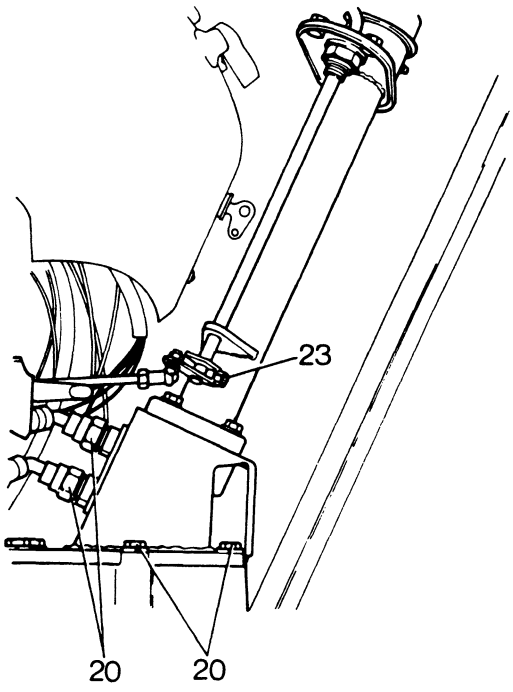

Figure 22

R77133

Introduction

The construction of the twelve speed and six speed gearbox is similar and the basic parts are the same.
The difference is that the twelve speed gearbox has an extra layshaft, drive gear and selector linkage.
The procedure for disassembly and assembly of both gearboxes is the same except for Operation 11, Disassembly, and Operation 18, Assembly.
The procedure for disassembly and assembly of the extra layshaft is in the section: Auxiliary Layshaft.

Disassembly of the Gearbox

1. Put the gearbox on an acceptable stand. See the section Special Tools.
2. Put a support under the slow/normal selector rod and remove the Mills pins from the selector fork and the selector jaw. Use a 500 g (1 lb) hammer and a 3 mm ($\frac{1}{8}$ in) punch to do this job.
3. Move the slow/normal selector rod toward the front of the gearbox. At the same time push the selector jaw and fork toward the rear end plate. Remove the selector jaw and fork.
   Pull the selector rod out of the front end plate. Remove the ball and spring.
4. Engage low gear and put a soft metal punch between two gears to stop the pinion shaft turning.
   Use a socket spanner $1\frac{1}{16}$ in A/F, to remove the Nyloc nut from the pinion shaft.
   NOTE: Turn the nut CLOCKWISE.
   Remove the washer and the bearing cone.
   Remove the soft metal punch.
   Put the selector jaws in the neutral position.
5. Remove the four Nyloc nuts which fasten the front end plate to the spacer bars.

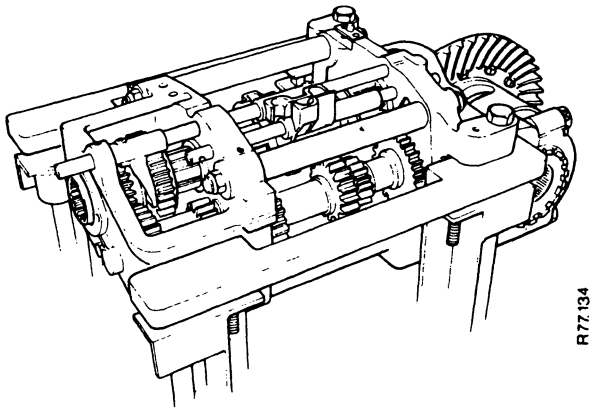

Figure 23

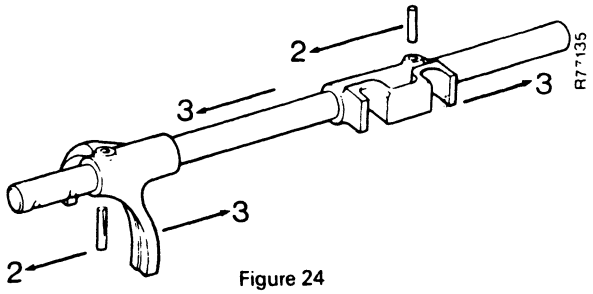

Figure 24

6. Engage medium gear by pushing the shortest selector rod toward the rear end plate. Keep the selector rod in this position. At the same time use a soft faced hammer to hit the front end plate toward the front of the gearbox until the end plate is away from the ball and gear lock grooves in the selector rod.
   Remove the ball from the hole in the end plate.
7. Push the selector rod for the high/low range toward the rear end plate. Remove the selector lock, ball and spring from the front end plate.
   NOTE: Selector locks are not installed on 'Q' cab tractors.
8. Push the selector rod for the low/reverse range toward the rear end plate.
   Remove the lock, ball and spring from the front end plate.
9. Remove the driving gear from the driveshaft.
10. Hold the driveshaft in position and remove the front end plate.
    When the end plate has been removed, hit it on a soft surface to remove the locks and springs.
11. Put the selector jaws in the neutral position.
12. Remove the driveshaft with the selector rod and fork.
13. Remove the layshaft.
14. Put a soft metal or wood wedge between the end of the pinion shaft and the rear end plate.

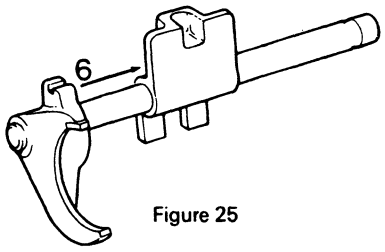

R77136

Figure 25

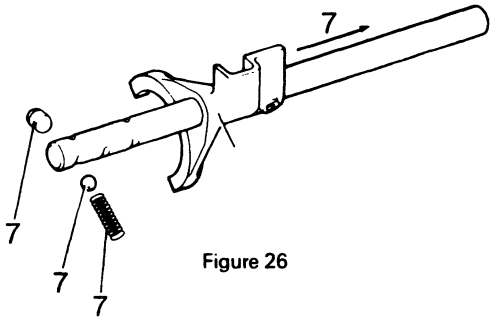

R77137

Figure 26

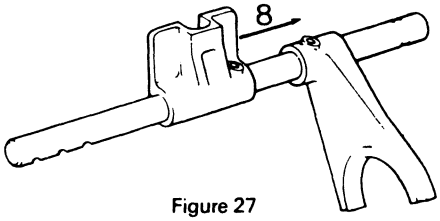

R77138

Figure 27

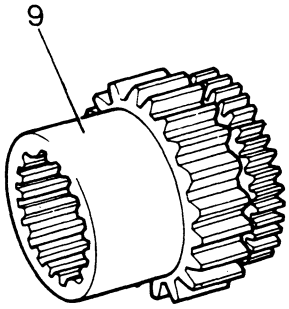

R77139

Figure 28

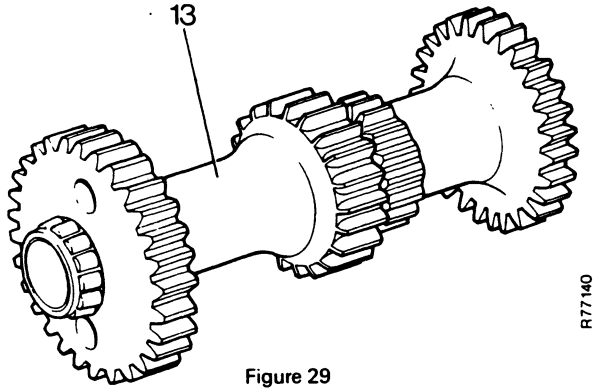

R77140

Figure 29

15. Remove the distance pieces, shims and special washer. Remove the high gear. Be ready to keep the bearing pads which will fall when the gear is moved.
16. Remove the sliding gear with the selector rod and fork.
17. Remove the front dog gear.
    Use external circlip pliers to remove the circlip.
    Remove the back dog gear.
18. Remove the medium gear. Be ready to keep the bearing pads which will fall when the gear is moved.
19. Remove the special washer.
    Use external circlip pliers to remove the circlip.
    NOTE: A split ring is used instead of a circlip on later models.
20. Remove the low gear with the selector rod and fork.
21. Put a mark on both the differential bearing caps and the rear end plate so that you can assemble the bearing caps in the correct position.
22. Put a support under the differential.
    Remove the bearing caps.
    Remove the differential assembly.
23. Remove the wedge and carefully pull the pinion out of the rear end plate.

Auxiliary Layshaft (12 speed gearboxes)

Disassembly

1. Remove the setscrew, tabwasher and locking plate from the front end plate.
2. Push the layshaft spindle out of the end plate.
3. Remove the layshaft and the two thrust washers.
4. Push the needle roller bearings and the distance piece out of the layshaft.

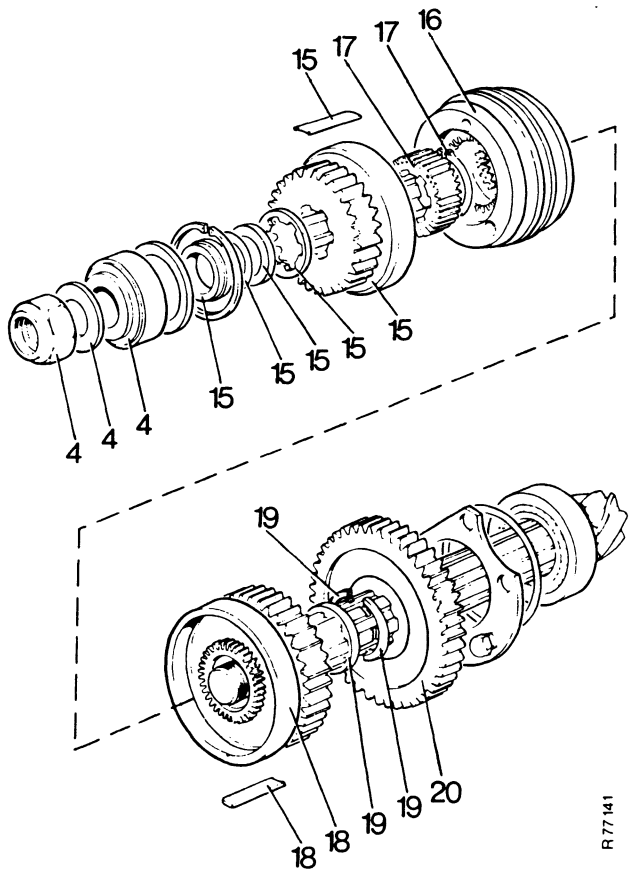

Figure 30

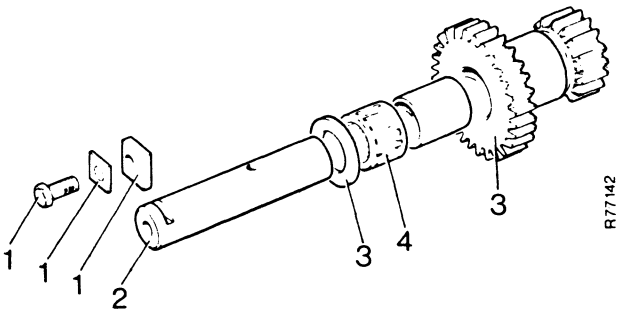

Figure 31

INSPECTION OF PARTS

Selector Parts

1. Check the position of a detent ball in the grooves of the selector rods.
   There must be a small clearance between the detent ball and the bottom of the groove.
   If there is no clearance, remove material from the bottom of the groove.
2. Measure the length of the springs.
   If the length is less than 31·7 mm ($1\frac{1}{4}$ in) replace the spring.
3. Measure the depth of the spring hole.
   To do this use a metal rod 100 mm (4 in) long and 10 mm ($\frac{3}{8}$ in) diameter.
   Use a hacksaw to put a mark 27·9 mm (1·100 in) from one end.
   Put the bar in the spring hole with the measured end toward the bottom of the hole.
   Look through the hole for the selector rod.
   The mark must be at the same level as the edge of the hole for the selector rod.
   If the mark is below the edge of the hole, remove the rod, install shims in the bottom of the spring hole.
   Do this until the mark and the hole are aligned.

Gear Teeth

1. Check the gear teeth for wear and damage.
   If it is known that a gear will not hold in the engaged position, replace the gear wheels in that ratio.
2. Check that the centralizer springs can be easily moved in the grooves in the sliding gear.
   NOTE: Do not try to disassemble the sliding gear. Be careful not to damage the cones in the sliding gear.

Bearings

1. Check the bearings for wear or damage. If you can see any wear or damage to the layshaft bearings, they must be replaced.
2. Check the bearing cups in the end plates for wear and damage.
   NOTE: If it is necessary to replace a taper roller bearing, the bearing cup must also be replaced.

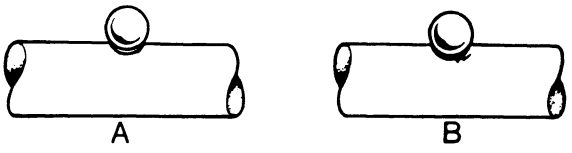

Figure 32
SELECTOR ROD AND DETENT BALL

R77143

A. Correct **B.** Wrong

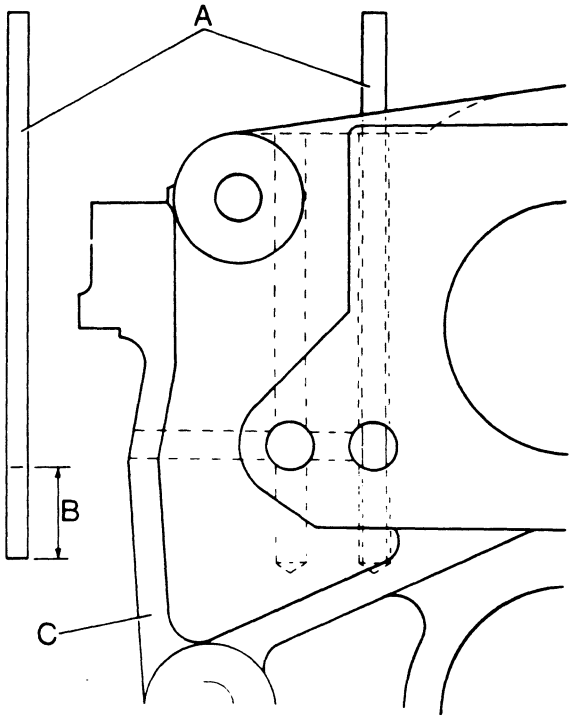

Figure 33
CHECKING DEPTH OF
DETENT SPRING HOLES

R77144

A. Test rod
B. 27·94 mm (1·10 in)
C. End plate

Auxiliary Layshaft Bearings

1. Check the needle roller bearings, the layshaft spindle and the layshaft bore for wear and damage.
   NOTE: If any one of these parts needs replacing, all the parts must be replaced. If this is not done, the result will be rapid wear of all the parts and possible gearbox failure.

Driveshaft Bush

1. Check the bush inside the front of the driveshaft for wear.
   Replace if necessary.

Driven Gear

1. Replace the oil seal and 'O' ring inside the driven gear.
   Use 'O' ring Part Number K623555.
   Install the oil seal with the seal lip towards the differential.
   To prevent damage to the oil seal when you install the PTO cardan shaft, remove the sharp edges from the splines of the cardan shaft.

Layshaft Bearing Failure

This can be caused by a failure of the lubrication system. Check:

1. That the oil pipes are correctly positioned.
2. That there is a supply of oil from the pump.

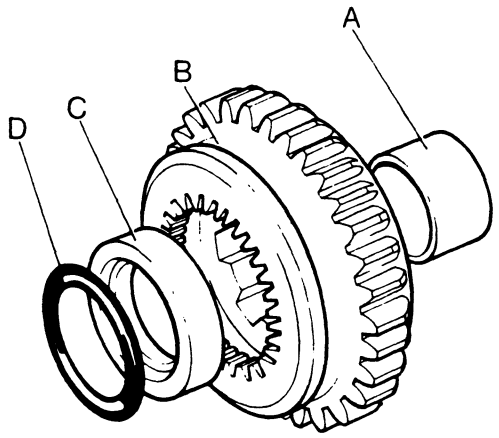

R77145

Figure 34

A. Driveshaft Bush
B. Driven Gear
C. Oil Seal
D. 'O' Ring

ADJUSTMENTS BEFORE ASSEMBLING THE GEARBOX

Auxiliary Layshaft: Twelve Speed Gearbox

If a new layshaft, spindle and needle bearings are being installed, do these jobs:

1. Put the layshaft with the bore vertical on a flat surface.
2. Put one needle bearing, the distance piece and the other needle bearing inside the bore of the layshaft.
3. Use a straight edge and a feeler gauge to measure the clearance between the face of the layshaft gear and the case of the needle bearing.
4. The correct clearance must be 0·25 mm (0·010 in) to 1·3 mm (0·050in).
5. If the clearance is not correct check:
   The needle bearings are Part Number K620273.
   The length of the distance piece is 42·54 to 42·67 mm (1·675 to 1·680 in).

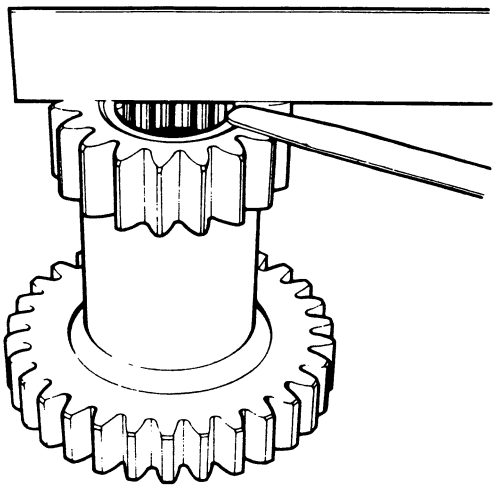

Figure 35

Layshaft Bearing Clearance

1. Remove the cup for the layshaft bearing from the front end plate.
   Remove shims approximately 0·20 mm (0·008 in) in thickness.
   Install the cup in the front end plate.
2. Put the layshaft in position in the rear end plate.
   Install the front end plate.
   Install the Nyloc nuts on the spacer bars and tighten to 9·7 kg m (70 lb ft).
3. Turn the layshaft to align the bearings.
4. Put a dial gauge against the end of the layshaft and move the layshaft backwards and forwards. Measure the amount of movement.
5. To find the correct amount of shims needed:
   Example: Amount of movement 0·016 in
   Minus (—) Movement needed 0·003 in
   Shims needed 0·013 in
6. Remove the front end plate and the layshaft.
   Remove the bearing cup from the front end plate.
   Install the correct amount of shims and the bearing cup.
7. Do jobs 2, 3 and 4 again to check that the clearance is correct.
   This is important.

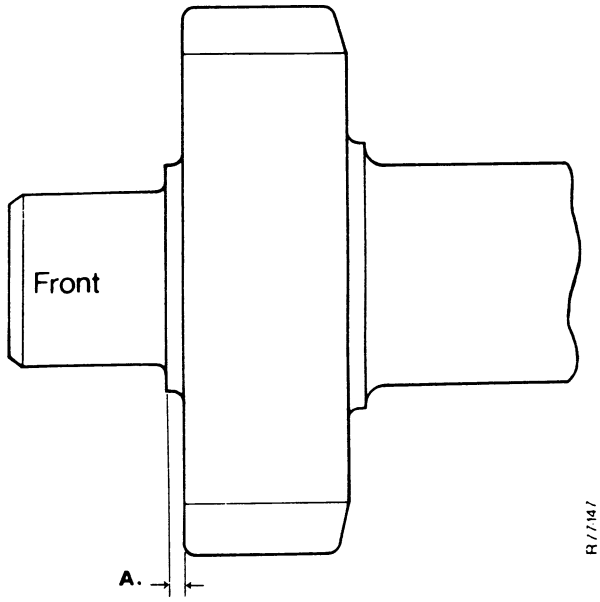

Figure 36 POSITION OF SHIMS

A. = 1·5 to 1·73 mm (0·058 to 0·068 in)
Install shims in the front end plate.

A. = 3·33 to 3 58 mm (0 131 to 0·141 in)
Install shims in the rear end plate

GEAR LEVERS

Removing

1. Clean the gearbox cover and the ball housings.
2. Remove the setscrews which fasten the ball housings to the gearbox cover.
3. Remove the ball housings with the gear levers.
4. Put a cover over the holes in the gearbox cover to prevent dirt falling into the gearbox.
5. Remove the gear lever knobs by turning the knobs counterclockwise.
6. Bend the tabwashers away from the support plate setscrews.
   Remove the support plate setscrews and the support plate.
7. Hold the ball end of the gear lever.
   Carefully pull the gear lever through the dirt excluder.

Installing

1. Put grease in the ball housing.
2. Hold the ball end of the gear lever. Push the lever in position through the dirt excluder.
3. Install the support plate, setscrews and new tabwashers.
4. Tighten the support plate setscrews to 0·55 kg m (4 lb ft).
   Bend the tabwashers to keep the setscrews in position.
5. Install the gear lever knob.
6. Use a new gasket. Install the ball housing on the gearbox cover.
   Check that the lever is engaged in the selector jaws.
7. Install the setscrews. Tighten to 0·97 kg m (7 lb ft).

Dirt Excluders

1. Check the dirt excluders for wear and damage. Replace if not correct.
2. Make sure that when the clip is in position the dirt excluder is tight against the ball housing.
   NOTE: A hose clip can be used to hold the dirt excluder in position.

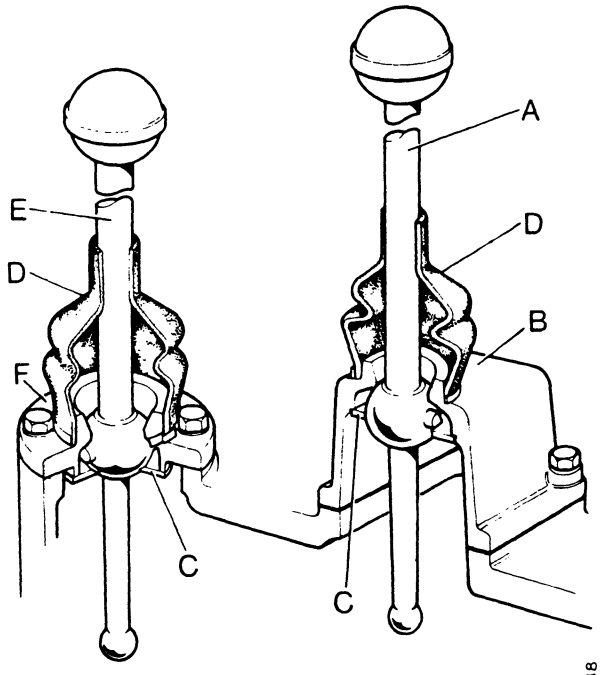

Figure 37 GEAR SELECTOR LEVERS

A. Range lever
B. Housing
C. Support plate
D. Dirt excluder
E. Gear lever
F. Housing

AUXILIARY LAYSHAFT

Twelve Speed Gearbox: See Figure 31

1. Install the needle bearings and distance piece in the layshaft bore.
   Put the layshaft in position in the front end plate.
2. Install a thrust washer at each end of the layshaft.
3. Align the holes and install the spindle.
4. Turn the spindle until the slot in the spindle is aligned with the screw hole in the end plate.
5. Install the locking plate, screw and tabwasher.
6. Tighten the screw to 2 kg m (15 lb ft).
   Bend the tabwasher to hold the screw in position.

Temporary Installation of the Differential:

1. Put the differential assembly in position on the rear end plate.
2. Install the bearing caps with the marks correctly aligned.
3. Install the bolts and tabwashers and tighten the bolts to 16·6 kg m (120 lb ft).

Assembling the Gearbox:

1. Install the pinion into the rear end plate.
   Put a soft metal or wood wedge between the end of the pinion shaft and the rear end plate.
2. Install the low gear complete with the selector rod and fork.
3. Install the circlip or the split ring.
   Install the special washer.
   NOTE: A split ring is now used instead of a circlip. See Technical Bulletin No. 63 of Aug. 1975.
4. Install the medium gear and the bearing pads.
5. Install the back dog gear with the smaller tooth sections toward the centre of the gearbox.
   Look for the mark on the face of the dog gear.
   Use external circlip pliers to install the circlip.
6. Look for the mark on the face of the front dog gear. Install the front dog gear so that the smaller tooth sections are toward the back dog gear and the marks are aligned.
7. Install the sliding gear with the selector rod and fork.
8. Install the high gear and the bearing pads.
9. Install the special washer and the distance piece.
   Use thick grease to hold the washer in position.
   Add one shim, 0·008 in, to the shims that were removed.
   Install the shims and distance piece.
   NOTE: The small shoulder of the distance piece must be installed toward the front of the gearbox.
10. Install the layshaft.
11. Install the range pinion, also the selector rod and fork.
12. Put the selector jaws in the neutral position.
13. Install the springs and low/reverse and medium/high gear locks in the front end plate.
14. Put the front end plate in position on the end of the spacer bars.

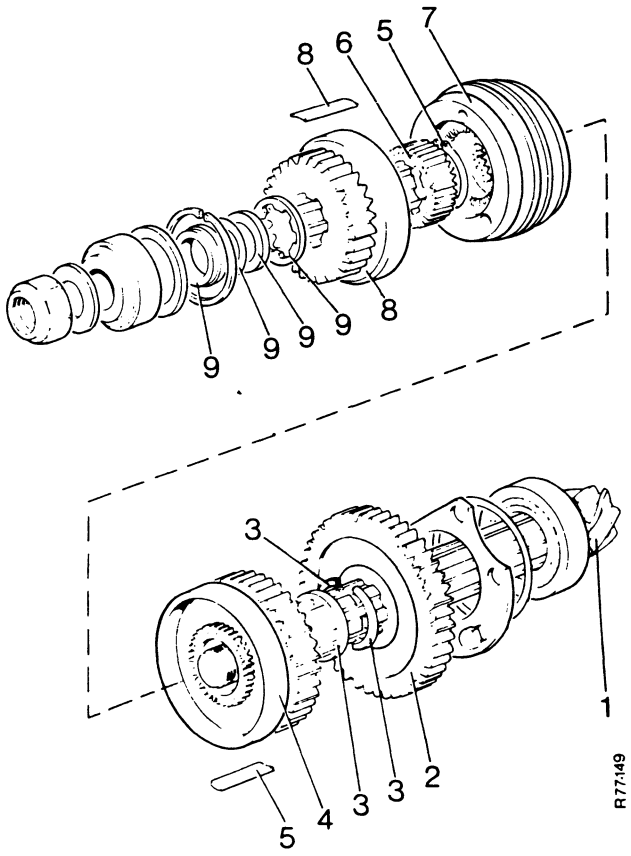

Figure 38

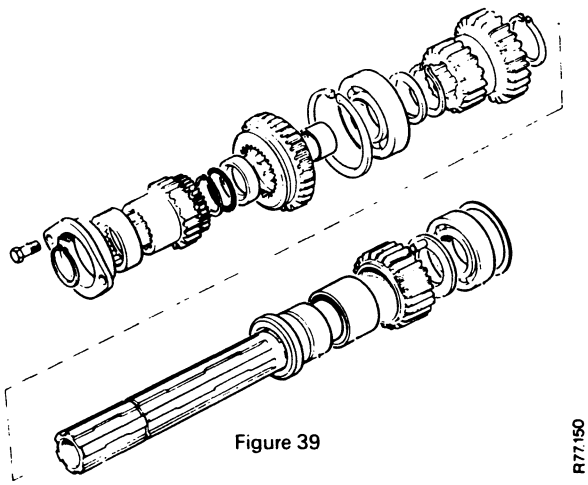

Figure 39

15. Install the ball for the low/reverse selector rod using the special tool.
    Do the procedure as follows:
    Put the spring and the ball in the hole in the front end plate.
    Hold the tool with the flat part toward the end of the selector rod.
    Push the ball down with the tool.
    Push the front end plate until the selector rod is in the hole and against the flat part of the tool.
    Remove the tool.
16. Move the low/reverse selector rod forward until the groove in the rod aligns with the gear lock.
17. Install the four Nyloc nuts on the spacer bars for two turns.
18. Twelve Speed Gearbox.
    Install the driving gear on the driveshaft.
19. Install the ball for the high/low selector rod, using the special tool to push the ball down as in Operation 15.
    At the same time pull the selector rod toward the front end plate until the rod is against the flat part of the tool.
    Remove the tool and pull the selector rod toward the front end plate.
20. Install the ball for the medium/high selector rod using the special tool as in Operation 19.
21. Align the layshaft bearings and push the front end plate into position.
22. Check that the lugs on the front end plate are against the face of the stand.
    Tighten the nuts to 7·9 kg m (70 lb ft).
23. Install the bearing, special washer and Nyloc nut on the pinion shaft. See Figure 41.
24. Remove the wedge from between the pinion and the rear end plate.
25. Engage low gear and put a soft metal punch between two gears to stop the pinion shaft turning.
    Use a socket spanner, $1\frac{1}{16}$ in A/F, to tighten the Nyloc nut to 27·6 kg m (200 lb ft).
26. Turn the pinion shaft to align the bearings.
27. Put a dial gauge against the end of the pinion shaft and move the pinion shaft backwards and forwards.
    Measure the amount of movement.
28. To find the correct amount of shims to remove:
    Example: Amount of Movement 0·010 in
    Movement needed 0·000 in
    Shims to be removed 0·010 in
    NOTE: The tolerance is +0·002 to —0·002 in.
29. Remove the Nyloc nut, special washer, bearing and distance piece from the pinion shaft.
    Remove shims of the correct size.
    Install the distance piece, bearing, special washer and Nyloc nut.
    Tighten the Nyloc nut to 27·6 kg m (200 lb ft).

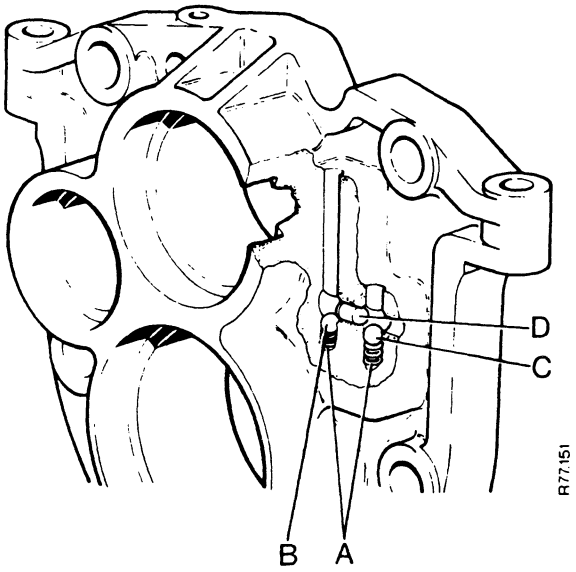

Figure 40 GEARBOX FRONT END-PLATE

A. Detent springs
B. Detent ball (Low/Reverse Gear)
C. Detent ball (Medium/High Gear)
D. Interlocking plunger

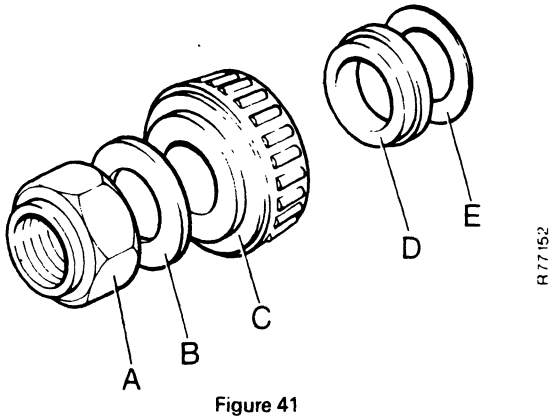

Figure 41

A. Nyloc Nut **B.** Special Washer
C. Bearing Cone **D.** Distance Piece
E. Shims

30. Remove the punch from between the gear teeth.
31. Engage either high or low gear.
32. Install the lock, spring and ball for the slow/normal selector rod.
    Push the ball down using the special tool and install the slow/normal selector rod in the front end plate.
33. Push the selector rod through the selector fork and the selector jaw.
34. Put a support under the selector rod and install the Mills pin.
35. Make the adjustment to the spiral gear free movement.
    See the Section: Spiral Gear for the procedure.

DIFFERENTIAL

Disassembly

1. Bend the tabwashers and remove the nine setscrews which fasten the cage to the end plate.
2. Put a mark on the cage and the end plate so that you can assemble the parts in the correct position. This job is important.
3. Use a soft faced hammer to remove the end plate.
4. Use external circlip pliers to remove the two circlips from the pin.
5. Use a mild steel punch and a hammer to remove the pin.
6. Remove the bevel wheels and bevel pinions.
   NOTE: It is not necessary to remove the spiral gear from the cage unless it is to be replaced.
   If a new spiral gear is being installed, do jobs 7 and 8.
7. Bend the tabwashers and remove the nuts and bolts which fasten the spiral gear to the cage.
8. Use a soft faced hammer to remove the spiral gear.
9. Check the two ball bearings for wear and damage.
10. If there is wear or damage, use Service Tool K960605 to remove the bearings. DO NOT use a tool which pulls against the outer track of the bearings.

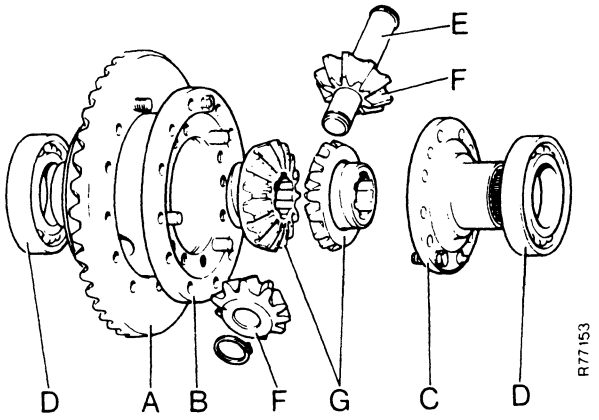

Figure 42 DIFFERENTIAL ASSEMBLY

A. Crown wheel **B.** Cage **C.** End plate
D. Ball thrust bearing **E.** Pin **F.** Bevel pinions
G. Bevel gears

Assembly

1. Before you install new bearings, look for the word THRUST on the outer track of each bearing.
2. Install the bearings with the word THRUST toward the adjuster wheels.
   Use a press to push the bearings into position.
3. Before you install a new spiral gear, make sure that the faces of the cage and the spiral gear are clean.
   NOTE: Spiral gears and bevel pinions are made as a set.
   Do not replace one part unless the other part is also replaced.
4. Put the spiral gear in position on the cage and install the bolts.
   Replace the tabwashers and install the nuts. Tighten the nuts evenly to 6·92 kg m (50 lb ft).
   Bend the tabwashers to keep the nuts in position.

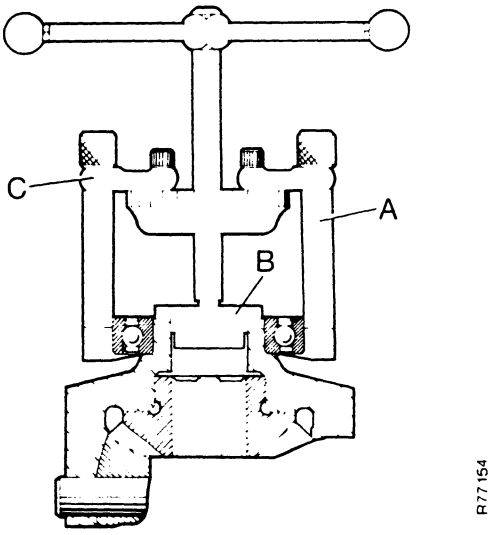

Figure 43 REMOVING DIFFERENTIAL BEARINGS

5. Put a small amount of molybdenum grease on the faces of the bevel wheels and bevel pinions.
6. Install a bevel wheel in the cage.
   Install the bevel pinions in the cage.
7. Align the holes in the bevel pinions with the holes in the cage and install the pin.
8. Use external circlip pliers to install a circlip at each end of the pin.
9. Install the other bevel pinion.
10. Align the marks on the end plate and the cage and use a soft faced hammer to hit the end plate in position.
11. Use new tabwashers and install the setscrews. Make sure that the tabwashers are over the dowels.
12. Tighten the setscrews to 4·2 kg m (30 lb ft).
13. Bend the tabwashers to keep the setscrews in position.

BEVEL PINION ADJUSTMENTS

NOTES:

When you install a new spiral gear you must install a new bevel pinion.
You must then adjust the position of the bevel pinion so that it engages correctly with the spiral gear.
You must also make this adjustment when you replace the taper roller bearings on the pinion shaft. To make this adjustment the gearbox must be disassembled.

To Make the Adjustment

1. Use a mild steel punch and a hammer to remove the pinion bearing cup from the rear end plate.
   Remove the shims from the rear end plate.
   Install the pinion bearing cup. Make sure it is correctly in position.
2. Install the bearing cone on the pinion shaft.
3. Install the front end plate. Tighten the Nyloc nuts to 9·67 kg m (70 lb ft).
4. Put the bevel pinion in position. Install the front bearing cone, washer and nut.
5. Tighten the nut while turning the pinion shaft until there is no free movement. The shaft will now be difficult to turn.
6. Assemble the Setting Gauge No. DB 8208 by installing the B spacer (5·9375 in) on the probe.
   Install the probe in the mandrel.
   Install the nut.
7. Put the setting gauge in position on the rear end plate.
   Install the bearing caps and the bolts.
   Tighten the bolts to 16·6 kg m (120 lb ft). Make sure that the mandrel is easy to move.
8. Move the mandrel until the probe is toward the back face of the pinion bearing.
   Turn the probe until it is against the face of the bearing.
   Tighten the nut.
   Check again the position of the probe. Make an adjustment if necessary.
9. Use a feeler gauge to measure the gap between the spacer and the mandrel. Make a record of this measurement.
10. Look for the number on the pinion face. Make a record of this number.
11. To find the correct amount of shims needed:
    Example: Negative (—) number on the pinion face: — 0·007 in

Constant dimension	0·030 in
minus (—)	0·007 in
	0·023 in
Gap measurement	0·057 in
minus (—)	0·023 in
Total shims needed	0·034 in

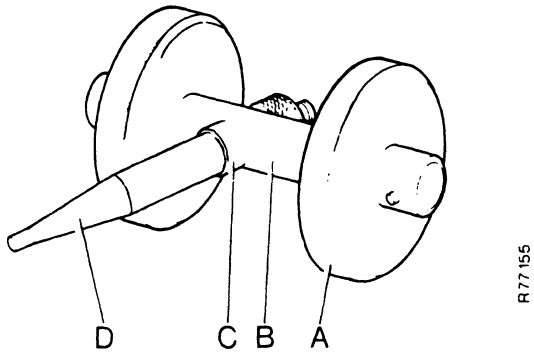

Figure 44
PINION SETTING GAUGE
(Service Tool DB 8208)

A. Dummy bearings **B.** Mandrel
C. Spacer **D.** Probe

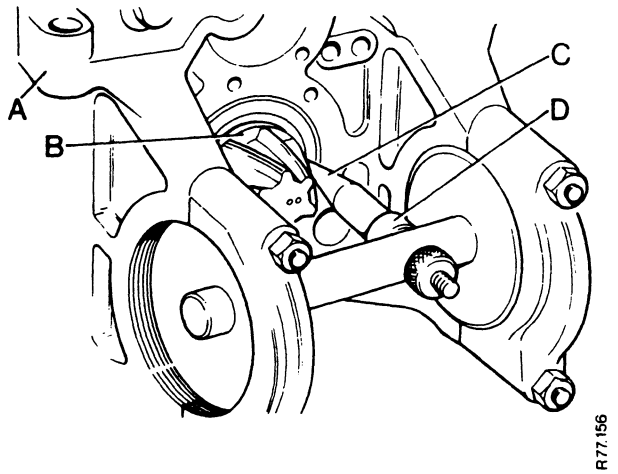

Figure 45
CHECKING PINION SETTING DISTANCE

A. Rear end-plate
B. Pinion bearing
C. Probe
D. Measured gap

Example: Positive (+) number on the pinion face: +0·007 in

Constant dimension	0·030 in
plus (+)	0·007 in
	0·037 in
Gap measurement	0·057 in
minus (—)	0·037 in
Total shims need	0·020 in

12. Remove the Setting Gauge from the end plate.
13. Remove the nut, washer and cone from the pinion shaft.
    Remove the pinion shaft.
14. Remove the pinion bearing cup.
    Install the correct amount of shims.
    Install the pinion bearing cup.
15. See page 25 for assembly of the gearbox.

SPIRAL GEAR ADJUSTMENTS

To Make the Adjustment

1. Remove the screws and lockplates from both adjuster wheels.
2. Use a screwdriver or flat bar to turn the left adjuster wheel clockwise until the spiral gear is pushed away from the pinion.
3. Turn the right adjuster wheel clockwise. At the same time hit the bearing caps and the differential cage with a soft faced hammer.
4. Do this until the spiral gear is difficult to turn.
5. Use a 150 mm (6 in) screwdriver as a weight. Put the point of the screwdriver in a horizontal hole in the differential cage.
6. Turn the right adjuster counterclockwise until the weight of the screwdriver moves the spiral gear between the pinion teeth.
7. Put a mark on both the adjusting wheels.
8. Put the probe of a dial gauge against the driving face of one of the teeth of the spiral gear to measure the free movement between the teeth.
9. Turn the left adjuster wheel counterclockwise and the right adjuster wheel clockwise. Use the marks to make sure that you turn each adjusting wheel the same amount.
10. When the gauge shows a free movement of 0·18 to 0·23 mm (0·007 to 0·009 in), tighten the bearing cap bolts to 16·6 kg m (120 lb ft).
    Bend the tabwashers to keep the bolts in position.
11. Check the free movement again and if correct install the lockplates and setscrews.
    Tighten the setscrews to 2·0 kg m (15 lb ft).
    Bend the lockplates to keep the setscrews in position.

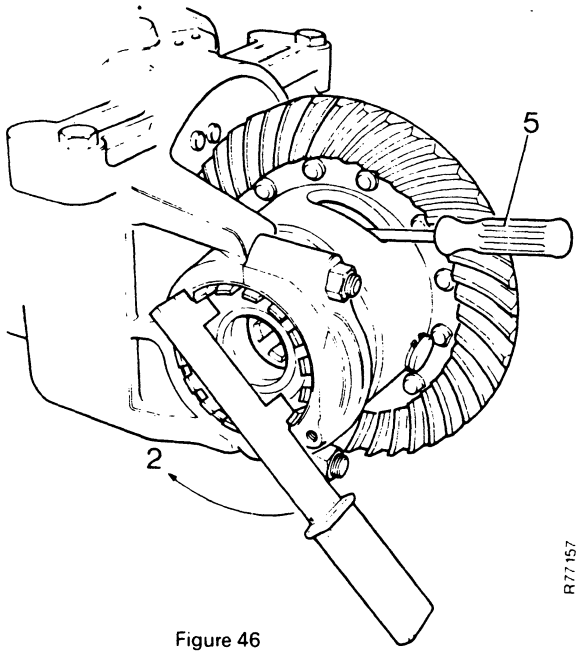

Figure 46

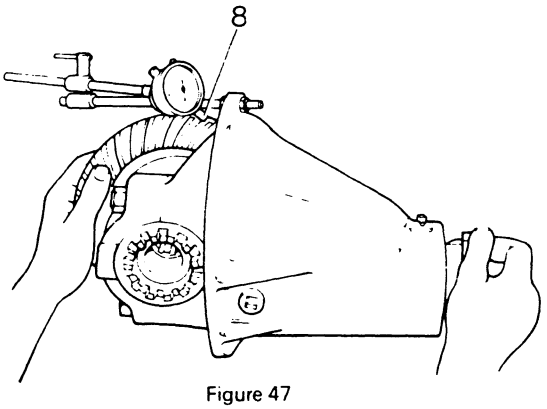

Figure 47

REDUCTION UNITS

Removing the Reduction Units

1. Put the tractor on hard and level ground.
2. Use a 5 ton jack to raise the back of the tractor. Put a support below each side of the rear axle case.
3. Remove the back wheels.
4. Loosen the adjusting nuts on both brake rods.
5. Engage the differential lock. Use wire to hold the lock in position.
   Do not do this if the gearbox is to be removed.
6. Remove the oil from each unit into a clean container. The total capacity is 5 litres (8 pints).
7. Remove the nuts which fasten the right-hand side reduction unit to the rear axle case.
8. Carefully pull the reduction unit away from the axle case until the dowels are disengaged.
9. Permit the unit to turn until it is in the vertical position.
10. Put a trolley jack in position under the reduction unit.
    Raise the jack until it is against the reduction unit.
    Use the jack as a support.
    Pull the reduction unit away from the axle case.
11. Do the jobs 7 to 10 to remove the left-hand side reduction unit.

Before you install the reduction units.

1. Check the brake linings for wear and damage. Replace if necessary.
   Look in the book for the procedure.
2. Replace the oil seals in the axle case.
   See the procedure on Page C3/39.
3. Check that the differential lock is in the engaged position. If the lock is not in the correct position, see Page C3/15 and do job 9.

Installing the Reduction Units

1. Clean the brake shoes, the brake drum and the faces of the axle case and the reduction case.
2. Put the reduction unit in position on a trolley jack. Raise the jack until the reduction unit is in alignment with the axle case.
3. Push the reduction unit toward the axle case until the shaft is engaged in the differential splines.

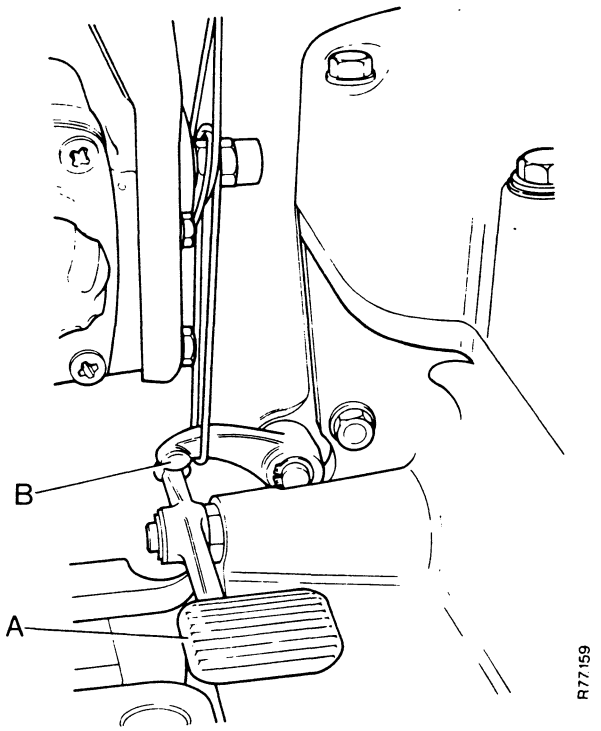

Figure 48 DIFFERENTIAL LOCK PEDAL HELD IN ENGAGED POSITION

A. Pedal **B.** Operating lever

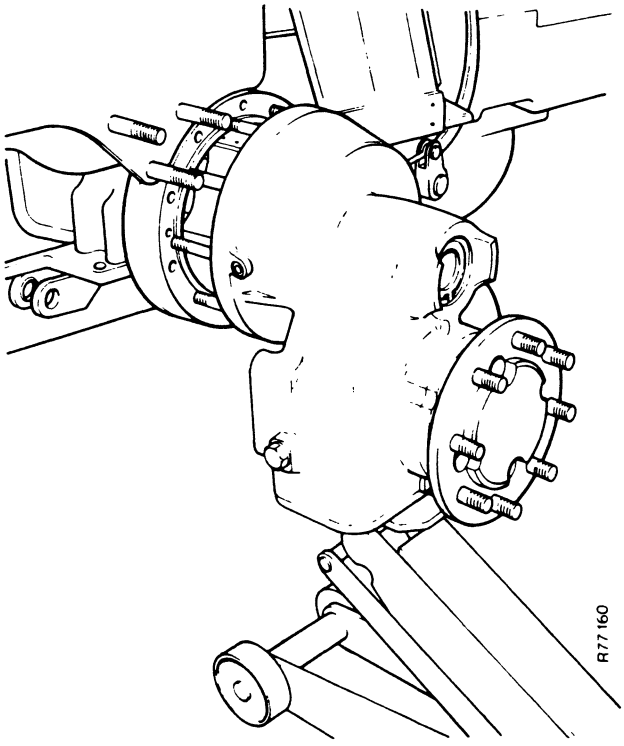

Figure 49

4. Remove the jack.
   Turn the reduction unit to align the dowel holes.
   Push the reduction unit in position on the dowels.
5. Install the spring washers and nuts.
   Tighten the nuts to 10·5 kg m (75 lb ft).
6. Adjust the brakes.
7. Install the back wheels.
8. Remove the supports from under the axle case.
9. Remove the wire from the differential lock lever.
10. Fill with new oil to the correct level.

REDUCTION UNIT

Disassembly:

1. Make sure that you have removed all the oil from the reduction case.
2. Remove the cover.
3. Bend the tabwasher away from the ring nut.
4. Use a spanner (Service Tool K909842) and a hammer to loosen the ring nut.
5. Turn the ring nut until it is against the inner bearing.
6. Clean the two holes, ($\frac{1}{2}$ in BSF thread) in the final driveshaft flange. Early types only.
7. Install two bolts (Service Tool K900207) in the holes.
8. Tighten the bolts against the heads of two bolts which fasten the oil seal housing to the reduction case.
9. Continue tightening the bolts evenly until the shaft is pulled out of the housing.
10. Remove the ring nut, tabwasher and the shaft from the reduction case.
11. Remove the six setscrews which fasten the oil seal housing to the reduction case.
    Remove the oil seal housing and the sleeve.
    Remove the spur gear.
12. Use Service Tool K960618 to remove the brake drum. Do the procedure as follows:
    Put the two $\frac{1}{2}$ in UNC × $3\frac{1}{2}$ in bolts in the holes in the flange of the tool.
    Put the annular spacer in position on the bolts.
    Put the tool on the pinion shaft.
    Fasten the tool flange to the drum with the bolts.
    Use a bar through the tool lug to prevent the tool from turning.
    Tighten the extractor screw to remove the drum.
    NOTE: If the brake drum is difficult to remove, hit the end of the extractor screw with a heavy soft-faced hammer. Then continue to tighten the extractor screw until the drum can be removed.
13. Use internal circlip pliers to remove the circlip which holds the end cover in the reduction case.
14. Hit the splined end of the shaft with a soft-faced hammer until the end cover, shims and outer bearing cup are pushed out of the case.
15. Remove the spur pinion shaft from the case.
16. Remove the bearing cones.
17. Use a long punch through the case to remove the oil seal.
18. Use internal circlip pliers to remove the circlip. Remove the distance piece.
19. Use a mild steel punch to remove the inner bearing cup.
    Hit the bearing cup from the outside toward the centre of the case.

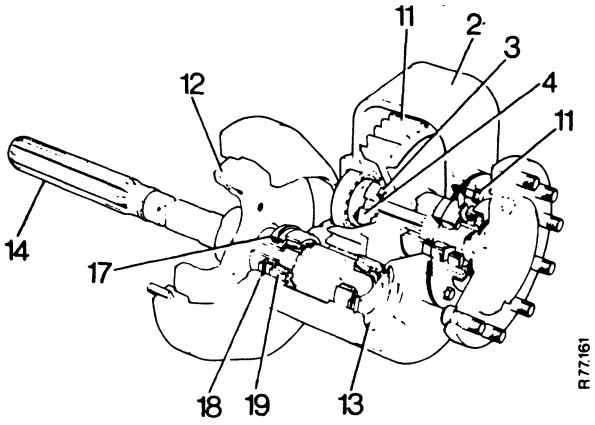

Figure 50

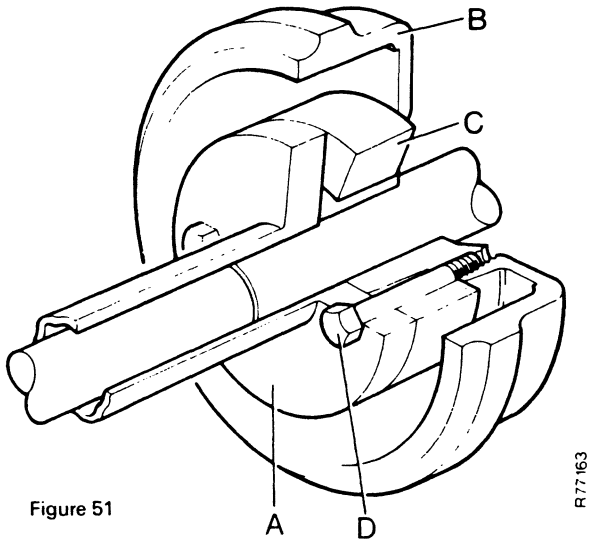

Figure 51

A. Service Tool
B. Brake drum $2\frac{1}{2}$ in
C. Distance Piece
D. Bolts $\frac{1}{2}$ UNC × $3\frac{1}{2}$ in

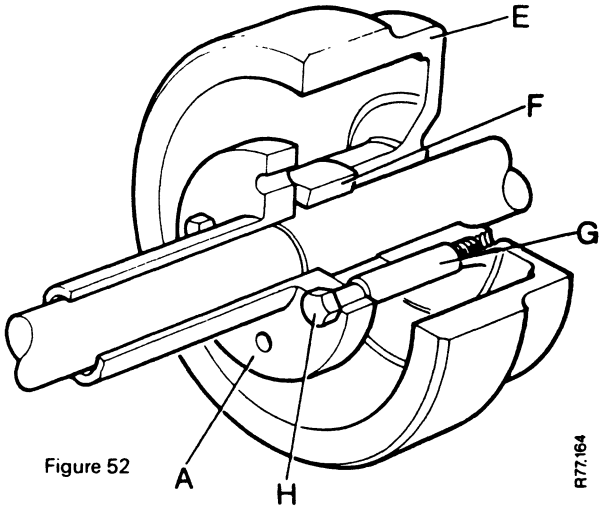

Figure 52

A. Service Tool
E. Brake drum $3\frac{1}{2}$ in
F. Collar
G. Distance Tube
H. Bolts $\frac{1}{2}$ UNC × 5 in

20. Remove the collar from the spur pinion shaft. Remove the 'O' ring from inside the collar.

Inspection:

1. Check all the bearing cups and cones for wear or damage.
2. Check the gear teeth for wear or damage.
3. Check the outside face of the collar for wear.
4. Replace any parts that show wear or damage.
5. Replace all the oil seals and 'O' rings. Destroy the old seals and 'O' rings.
6. Check the brake drums for wear. See the Data Section for the permissible size before replacement is necessary.

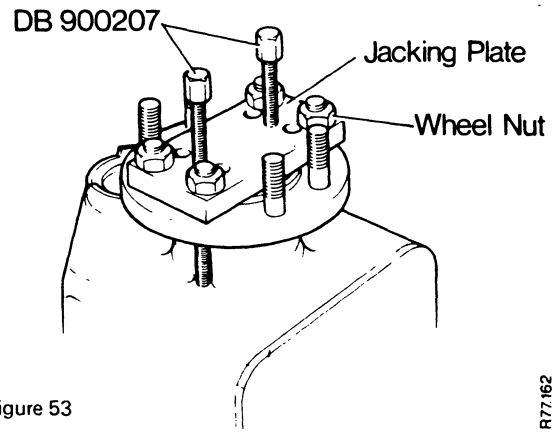

Figure 53

THE FINAL DRIVE SHAFT OF LATE TYPE TRACTORS

SPUR PINION SHAFT

Installing and Adjusting

1. Install the inner oil seal, circlip and distance piece in the reduction case.
2. Install the inner bearing cup.
3. Install the bearing cones on the spur pinion shaft.
4. Put the spur pinion shaft into the reduction case with the splined end through the oil seal.
5. Install the outer bearing cup.
6. Install a new 'O' ring in the collar.
7. Install the collar on the spur pinion shaft with the shoulder toward the bearing.
8. Install the key in the groove in the spur pinion shaft.
   NOTE: Two keys must be installed when the brake drum is $2\frac{1}{2}$ inches wide.
9. Put the brake drum on the spur pinion shaft. Align the grooves in the brake drum with the key.
10. Put a support against the outer end of the spur pinion shaft.
    Use a steel tube 50 mm (2 in) bore and a heavy hammer to put the brake drum in position against the collar.
11. Turn the spur pinion shaft to align the bearings.
12. Install the end cover without the 'O' ring. Install the circlip.
13. Push the end cover toward the bearing. Use a feeler gauge to measure the gap between the end cover and the circlip. Make a record of the measurement.
14. To find the correct amount of shims needed:
    Example: Measurement of the gap 0·012 in
    Plus (+) Bearing preload 0·003 in
    Shims needed 0·015 in
15. Remove the circlip and end cover. Install the correct amount of shims against the bearing cup. Put a new 'O' ring in position on the end cover. Install the end cover. Install the circlip.

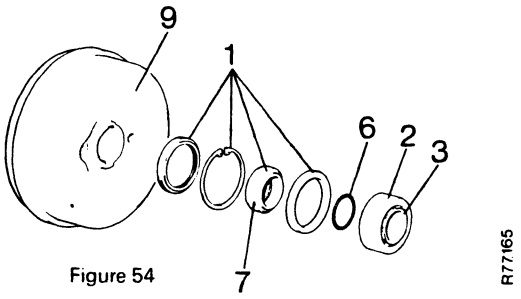

Figure 54

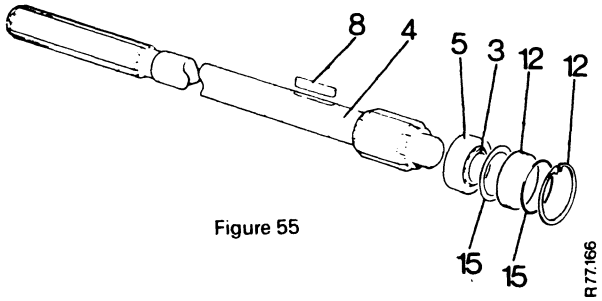

Figure 55

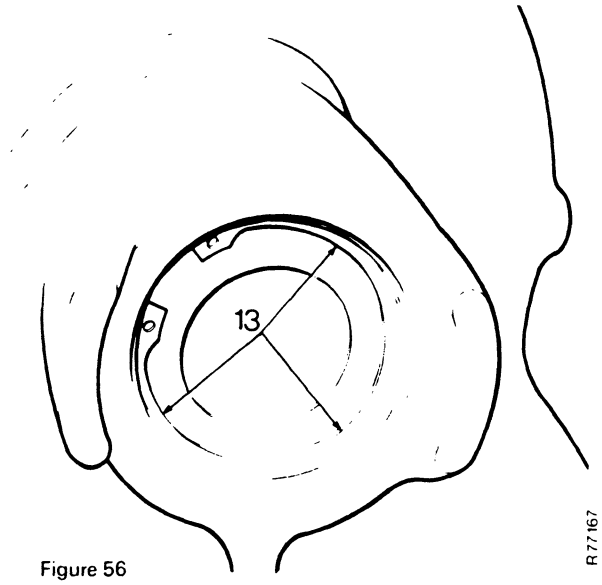

Figure 56

FINAL DRIVESHAFT

Installing and Adjusting

NOTE: When you install new oil seals, use a piece of plate or round bar to prevent damage to the seal.

1. Put the inner oil seal (single lip type) in the bore of the reduction case.
   Make sure that the lip of the seal is toward the inside of the reduction case.
2. Use the plate or round bar to push the oil seal in position.
   The correct position for the oil seal is when the distance from the outer face of the seal to the face of the reduction case is 25 mm (1 in).
3. Put the outer oil seal (double lip type) in the bore of the oil seal housing.
   Make sure that the seal lips are toward the outside of the seal housing.
4. Use the plate or round bar to push the oil seal in position.
   The correct position is when the seal is against the inner shoulder of the seal housing.
5. Install the dirt shield, new 'O' ring and collar on the final drive shaft.
   Make sure that the inside chamfer of the collar is toward the flange end of the shaft.
6. Install the oil seal housing on the final drive shaft.
7. Install the bearing cup in the oil seal housing.
8. Install the bearing cone and the sleeve on the final drive shaft.
   Make sure that the chamfered end of the sleeve is toward the bearing.
9. Use an acceptable piece of pipe to push the sleeve until the bearing cone is against the collar.
10. Clean the splines on the final drive shaft.
    Put the correct grade of Loctite on the splines.
11. Put the spur gear in the reduction case.
    Carefully put the drive shaft in the reduction case to engage in the splines of the spur gear.
    When the drive shaft is through the spur gear, install the tabwasher, ring nut and bearing cone.
    Tighten the ring nut with your fingers.
12. Turn the oil seal housing so that when you look toward the spur gear:
    (i) The grease nipple on the right-hand side is in the 0700 hours position.
    (ii) The grease nipple on the left-hand side is in the 0500 hours position.
13. Install three bolts which fasten the seal housing to the reduction case. Put the bolts in position at even distances.
    Tighten the bolts with your fingers.

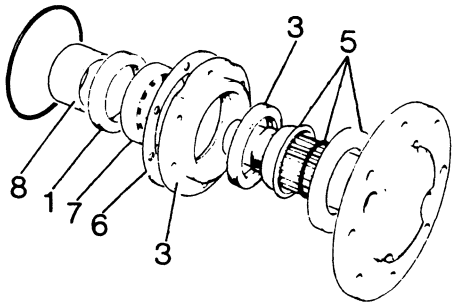

R77.168

Figure 57

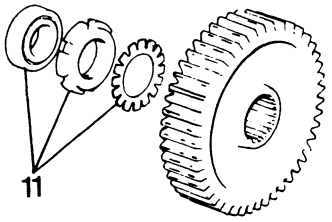

R77.169

Figure 58

14. Use a spanner (Service Tool K909842) and a hammer to tighten the ring nut.
    When the ring nut is tight, bend the tabwasher to keep the ring nut in position.
15. Tighten the three bolts evenly. At the same time hit the flange of the drive shaft with a soft faced hammer to align the bearings.
    While you tighten the bolts make sure that the gap between the seal housing and the reduction case is even.
    Use a feeler gauge to check the gap.
    Turn the drive shaft backwards and forwards.
16. When you cannot turn the drive shaft, use a feeler gauge to measure the gap.
    Make a record of this measurement.
    To find the correct amount of shims needed:

Example: Measurement of the gap	0·015 in
Minus (—) Bearing preload	0·005 in
Shims needed	0·010 in

17. Remove the three bolts.
    Install the correct amount of shims.
    NOTE: Put the shims in position so that the ends of the shims are horizontal when the reduction unit is installed on the axle case.
18. Install all the bolts. Tighten the bolts to 6·9 kg m (50 lb ft).
19. Use a grease gun on the grease nipple to put grease in the space between the inner and outer oil seals.
    When you do this job, look inside the reduction case at the inner oil seal.
    Add grease until you can see grease at the lip of the inner oil seal.
20. Install a new gasket on the cover.
    Install the cover with the filler plug at the bottom.
    Install the setscrews. Make sure that the hollow bolt is installed at the top.
    Tighten the setscrews to 3·5 kg m (25 lb ft).
    NOTE: A hollow bolt is not installed to tractors that have been changed to High Clearance.

REAR AXLE CASE OIL SEALS

There are two oil seals installed at each end of the axle case.

Removing the Oil Seals

1. You will need Service Tool K900208. Do the procedure as follows:
2. Use two $\frac{1}{4}$ BSF × 2 in bolts to fasten the tool to the housing.
3. Install the two special bolts (900207) in the tool.
4. Tighten the bolts evenly to pull the housing out of the axle case.
5. Remove the oil seals from the housing.

Installing the Oil Seals

1. Clean the oil seal housing and the inside of the axle case.
2. Put a new seal in position in the bore of the housing.
   Make sure that the seal lip is away from the housing shoulder.
   Use an acceptable piece of metal or wood, 3 in diameter, to push the seal to the end of the housing bore.
3. Put the second new seal in position in the bore of the housing.
   Make sure that the seal lip is away from the housing shoulder.
   Use the same piece of wood or metal to push the seal in the housing until it is level with the housing edge.
4. Put grease in the space between the oil seals.
5. Put jointing compound on the outside of the housing.
6. Use a soft faced hammer to hit the housing in position in the axle case.

Reduction Case Breather

To give release to any pressure that may be inside the reduction case, one of the cover bolts is hollow.
When you install the cover on the reduction case, check:

1. The hole in the bolt is clear of dirt.
2. You install the hollow bolt at the top of the cover.
   NOTE: Do not replace the hollow bolt with a bolt of the normal type unless the tractor has been changed to High Clearance.

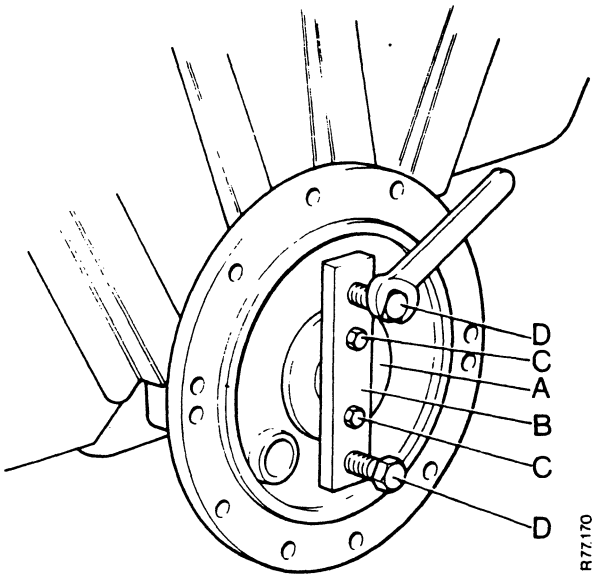

Figure 59 REMOVING OIL SEAL HOUSING FROM AXLE CASE

A. Oil seal housing **B.** Bridge piece
C. Bolts into seal housing **D.** Extraction bolts

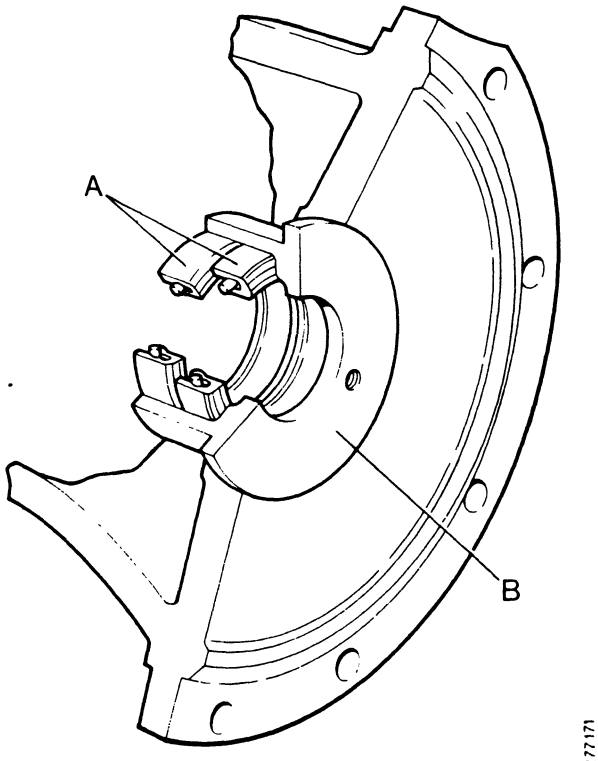

Figure 60 REAR AXLE CASE OIL SEALS

A. Oil seals **B.** Seal housing

DATA

Driveshaft end clearance	0·4 mm	0·015 in
Auxiliary layshaft end clearance	0·25 to 1·3 mm	0·010 to 0·050 in
Layshaft end clearance	0·05 to 0·10 mm	0·002 to 0·004 in
Pinion end clearance	0·000 mm	0·000 in
Spiral gear free movement	0·18 to 0·23 mm	0·007 to 0·009 in
Differential bearing end clearance	0·05 mm	0·002 in
Gearbox mounting bushes: vertical	0·40 to 0·53 mm	0·016 to 0·021 in
horizontal	0·20 to 0·30 mm	0·008 to 0·012 in
Muff coupling end clearance	0·20 to 1·00 mm	0·008 to 0·040 in
Spur pinion shaft clearance (minus)	0·07 mm	0·003 in
Final driveshaft clearance (minus)	0·12 mm	0·005 in
Brake drum diameter (new)	216·41 mm	8·52 in

TORQUE

Gearbox mounting bolts	13·8 kg m	100 lb ft
Spacer bar nuts	9·7 kg m	70 lb ft
Housing bolts (pinion thrust bearing)	4·15 kg m	30 lb ft
Spiral gear fastening bolts	6·9 kg m	50 lb ft
Differential end plate bolts	4·2 kg m	30 lb ft
Differential bearing cap bolts	16·6 kg m	120 lb ft
Bevel pinion nut	27·6 kg m	200 lb ft
Axle case to main frame bolts	7·6 kg m	55 lb ft
Axle case to reduction unit bolts	10·4 kg m	75 lb ft
Reduction case to seal housing bolts	6·9 kg m	50 lb ft
Gearbox cover bolts	6·9 kg m	50 lb ft
PTO to axle case bolts	10·4 kg m	75 lb ft
Reduction unit cover bolts	3·5 kg m	25 lb ft

TRANSMISSION

1200 AND 1210 TRACTORS

CASE CORPORATION

Pub 9-37151

PRINTED IN U.S.A.

CONTENTS

REPAIR OPERATIONS

(In same order as Schedule of Repair Times, TP 670)

Operation	Description	Page
K1.	Removing and replacing gearbox	1
K1a.	Dismantling and assembling gearbox	4
	Repairs with 12-speed gearbox *in situ*	13
K1b.	Dismantling and assembling differential	16
K1c.	Adjusting differential bearing end-float	17
K2.	Removing and replacing gear levers	19
K4.	Removing and replacing reduction units	20
K4b.	Dismantling and assembling reduction unit	21
K4c.	Removing and replacing rear axle case oil seal	23
K5.	Removing and replacing final drive shaft oil seal	24
K7.	Removing and replacing differential lock pedal	25
	DIMENSIONAL DATA	25
	SUMMARY OF DESIGN CHANGES	26

OPERATION K1

Removing and Replacing Gearbox

The gearbox can be removed upwards after removing both reduction units and gearbox cover, without disturbing the clutch.

1. Clean the exterior of the tractor, paying particular attention to the gearbox cover and rear axle case.
2. Disconnect main battery lead, instrument panel wiring and engine speed indicator drive.
3. Disconnect throttle linkage from lower end of hand lever then remove hand lever. Remove engine stop control bracket from steering box.
4. Disconnect fuel pipes (drain fuel tank, to reduce its weight, if full) and remove fuel tank complete with instrument panel.
5. Disconnect drag link from drop arm and drain steering box oil. Remove steering box complete with column and wheel.
   CAUTION: Do not turn steering wheel into full left-hand lock when drag link is disconnected as the steering nut can be turned past end of screw and allow the steel balls to fall out.
   If tractor is fitted with hydrostatic steering, drain reservoir, to prevent oil leakage, by disconnecting pump inlet then disconnect four pipes from servo valve. Alternatively supply and return pipes can be blanked off to prevent leakage.
   Remove mounting bracket, complete with servo valve and steering column. Do not turn steering wheel after removal or oil will be discharged from servo valve.
6. Drain transmission oil, (capacity approximately 9 gal., 40 litres), through plugs in main frame and rear axle case. If oil is to be re-used ensure that containers are very clean and are removed from under tractor as soon as oil is drained.
7. Remove tractor seat and support bracket. Remove gearbox cover to clutch housing bolts, lift out wedge and shims. Remove all gearbox cover bolts, including five through rear axle case, then lift off gearbox cover. (Fig. 1).
8. Remove the two bolts attaching drawbar frame to hitch brackets and lower drawbar to ground. Disconnect sensing unit cable and remove sensing unit. Remove bolts attaching PTO unit to rear axle case and withdraw PTO unit complete. Slide cardan shaft out of gearbox. (Fig. 2).
9. Raise rear of tractor and place suitable support stands under each side of rear axle. Fully unscrew adjusting nuts on both brake rods, to prevent shoes binding on brake drums, then remove both reduction units (see Page 20).
10. Remove oil seal housing from right-hand side of axle case (see Page 23), so that a hand can be inserted into axle case to withdraw diff lock sleeve and spring. As spring may have expanded and trapped sleeve in case it may be necessary to manipulate diff lock pedal to release sleeve. It is not necessary to remove spring or sleeve from axle: all that is required is for spring and sleeve to be clear of differential.

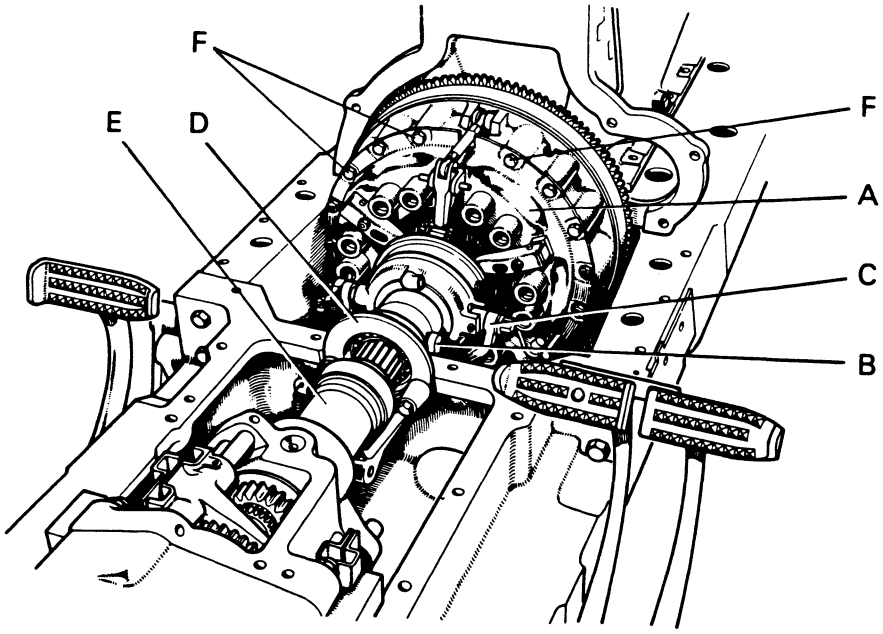

Figure 1. TRACTOR WITH GEARBOX COVER REMOVED

A. Clutch assembly
B. Transmission release fork
C. PTO release fork
D. Support snout
E. Muff coupling
F. Bolts — clutch to flywheel

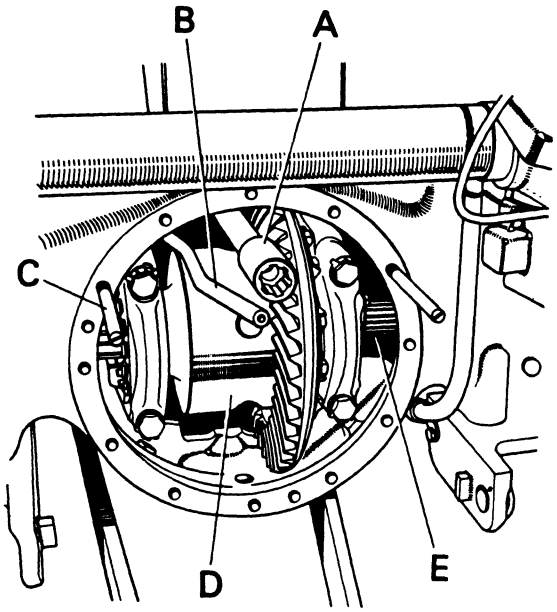

Figure 2.
TRACTOR WITH PTO UNIT REMOVED

A. PTO cardan shaft
B. Lubrication pipe
C. Guide studs
D. Differential
E. Differential lock sleeve

11. Disconnect drive between clutch and gearbox by moving the muff coupling. On six-speed gearboxes release circlip on gearbox driveshaft then slide muff coupling fully rearwards until it is clear of clutch shaft. On twelve-speed gearboxes release circlip on clutch driveshaft then slide muff coupling fully forward until it is clear of gearbox shaft. Remove shims from gearbox shaft and retain these until required for re-assembly
12. Remove gearbox lubricating pipes and bolts attaching rear of gearbox to main frame. Screw a ½ UNC eyebolt into tapped hole in rear end plate, attach suitable lifting tackle to eyebolt and lift complete gearbox, front end first, out of frame.

Replace gearbox in reverse order of removal, paying particular attention to the following.

1. Remove hydraulic filter assembly from underside of main frame. Wash the screen filter in clean fuel oil and if filter incorporates a paper element, discard this and fit a new element.
CAUTION: Handle new filter elements with care. A dry element is fragile and if split will allow unfiltered oil to pass into the hydraulic system.
Before replacing the hydraulic filter, clean inside of main frame and remove all traces of gasket from frame and axle faces.
2. Fit muff coupling onto clutch shaft if 12-speed, or gearbox shaft if 6-speed, ensuring that any shims originally fitted at rear of coupling are replaced on gearbox shaft. Lower gearbox assembly, rear end first, into main frame. Replace the two rear mounting bolts, *without bushes,* and fully tighten so that end plate is helf firmly down on frame then check that both front-end plate lugs are touching main frame face. If both lugs are not touching main frame, release the four Nyloc nuts on front end of gearbox studs then tap end of each stud with a soft-faced hammer to allow end-plate to align itself. Fully tighten stud nuts then remove mounting bolts, fit bushes and replace and fully tighten bolts.
3. Slide muff coupling into position – forward on 6-speed, rearward on 12-speed – and check that gearbox alignment is correct by ensuring that coupling can be easily engaged in any position through a full 360 degrees. Slide shaft circlip into its groove then check muff coupling end float, this should be 0.008 to 0.040 in. (0.20 to 1.02 mm) and, if necessary, should be adjusted by changing thickness of shaft shims.
4. Examine clutch stop, if fitted, whilst gearbox cover is removed. Check condition of brake band and reset internal adjustment (see Clutch Section).
5. Slide PTO cardan shaft through gearbox and into clutch, taking care not to damage or displace seal in clutch shaft, or on 12-speed gearbox, driving gear. If difficulty is experienced entering shaft into clutch, place PTO clutch hand lever in disengaged position, so that clutch plate is released, then turn shaft whilst pushing it into place. Ensure that shaft is pushed fully into flywheel spigot bearing.
6. Replace diff-lock spring in differential end plate. Place sleeve on tool, shouldered end of sleeve towards handle end of tool, and insert tool into axle case. Push tool inwards until sleeve shoulder is behind inner web of casting. When placing sleeve in this position ensure that protruding end of tool is not entered in the spring or the sleeve will be tilted and make subsequent engagement of pedal fork difficult. Manipulate the pedal fork until it is in line with sleeve groove then turn tool to move sleeve sideways and engage fork in sleeve groove. At the same time the protruding end of tool will automatically locate in the spring and act as a guide to align sleeve end plate with end plate splines. Push tool towards differential and manipulate it until splines on sleeve engage in end plate splines then wire diff-lock down to hold the sleeve in the engaged position and allow tool to be withdrawn without the sleeve becoming displaced. (Fig. 3).
7. Examine rear axle case oil seals and renew if not in good condition. New seals should be fitted with the seal lips towards centre of tractor and cavity between seals packed with high-melting point grease. Replace seal housing in right-hand side of axle, smearing outside of housing with jointing compound before pressing it into axle case.

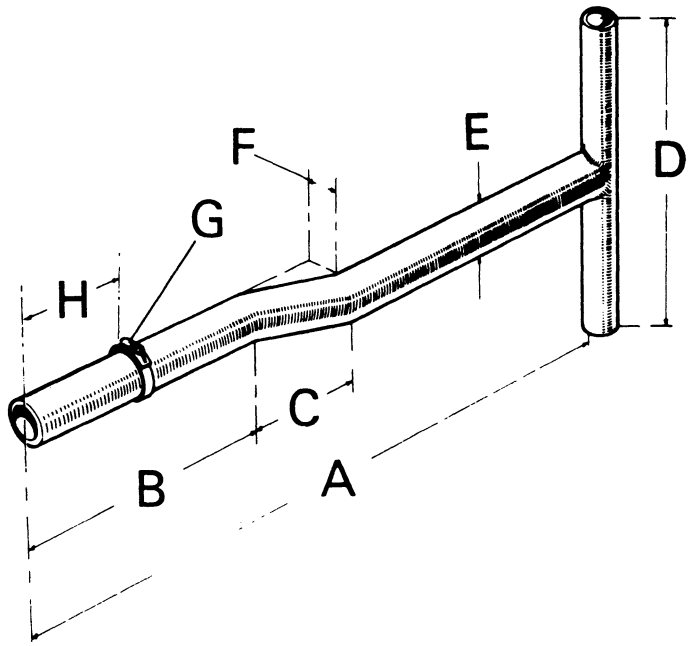

Figure 3. TOOL FOR REPLACING DIFFERENTIAL LOCK SLEEVE

A. 24 in. (609·6 mm) **B.** 9 in. (228·6 mm) **C.** 4 in. (101·6 mm)
D. 12 in. (304·8 mm) **E.** $1\frac{1}{2}$ in. (38·1 mm) **F.** 1 in. (25·4 mm)
G. Hose clip **H.** $4\frac{1}{16}$ in. (103·2 mm)

8. Ensure that axle case faces are clean and brake shoes in good condition. Smear outside of axle case oil seals with grease and wipe the inside of brake drums then refit reduction units, taking care not to damage oil seals. Degrease bolt or stud threads then smear with Loctite before replacing. (Grade AV)
9. Replace rear wheels and re-adjust brakes. Remove supports and lower tractor on its wheels. Replace PTO unit.
10. Replace gearbox lubrication pipes, ensuring that the front pipe is correctly positioned: on 6-speed models the front pipe must be positioned to direct oil on the clutch stop drum but on 12-speed models the front pipe must be fully inserted into front end-plate hole so that auxiliary reduction lay shaft is pressure lubricated (there is no direct feed to the 12-speed clutch stop as the auxiliary reduction unit provides adequate oil splash). (Fig. 4).

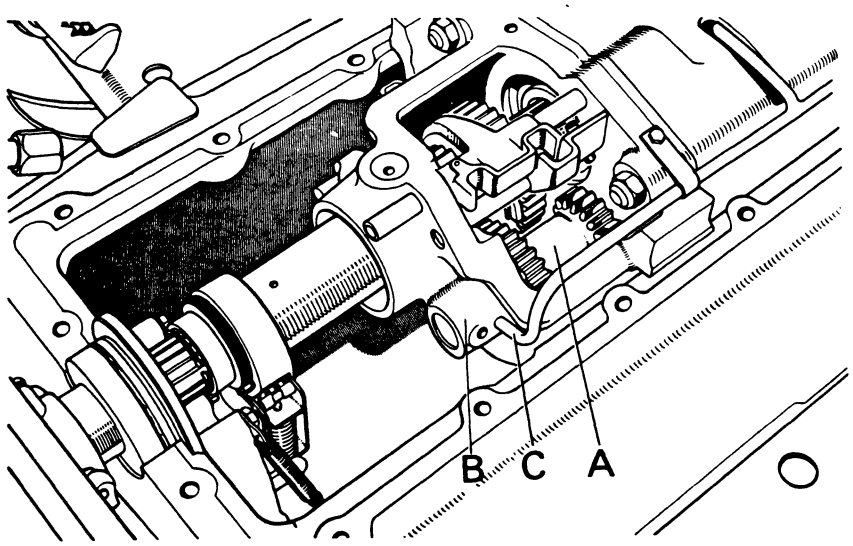

Figure 4. OIL FEED PIPE — 12-SPEED GEARBOX

A. Auxiliary layshaft **B.** Front end-plate **C.** Oil feed pipe

11. Replace gearbox cover, using new gaskets and ensuring that gear levers are correctly engaged in their selectors before cover bolts are fitted. Tighten cover-to-main-frame bolts only sufficient to hold cover down on frame then fully tighten bolts through axle case before finally fully tightening bolts into main frame.
12. Place spacing wedge in gap between gearbox and clutch cover. If wedge is not tight in gap add shims until wedge is so tight that it has to be driven in with a copper hammer, then replace and fully tighten bolts.
13. Replace steering box and column. Re-connect drag link and refill steering box with oil
If hydrostatic steering is fitted, replace steering column complete with servo valve. Re-connect pipes to valve and pump, refill reservoir with new oil.
14. Refill transmission with oil: a quick way of doing this is to pour the oil into top of PTO case. If original oil is being re-used pour it through a funnel with a fine screen filter and discard the last gallon, which will have accumulated any sediment. Top up to level mark on dipstick with new oil then replace sensing unit.
15. Replace fuel tank and re-connect fuel pipes. Refit hand throttle and attach stop control bracket. Connect engine speed indicator cable and instrument panel wiring. Re-connect battery cable.
16. Replace seat, start engine and if hydrostatic steering is fitted raise front wheels off ground, turn steering wheel from lock-to-lock several times to vent system then top-up reservoir.

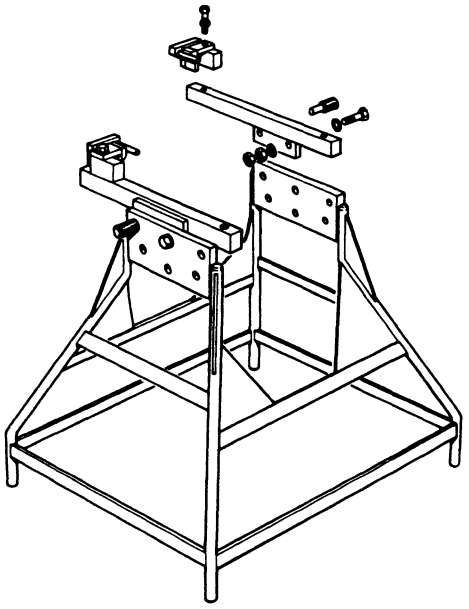

Figure 6.
GEARBOX SUPPORT STAND
Made to Service drawing Misc. 1747

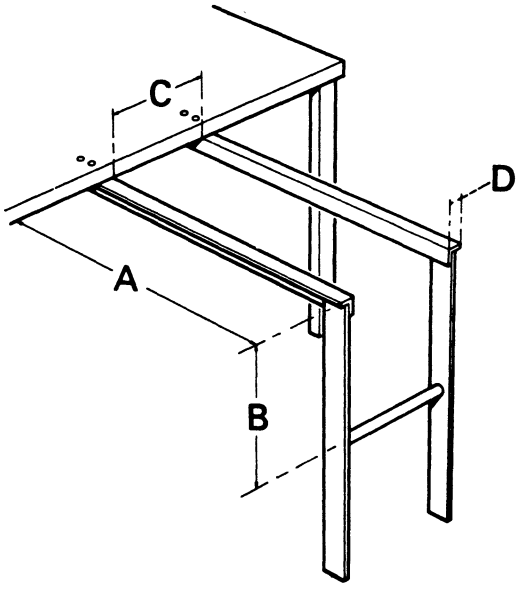

Figure 5.
GEARBOX SUPPORT FRAME
A. 30 in. (762·0 mm)
B. 15 in. (381·0 mm)
C. 11 in. (279·4 mm)
D. 2 in. (50·8 mm)

OPERATION K1a

Dismantling and Assembling Gearbox

The gearbox assembly is a very heavy unit and repairs will be easier if a support stand is used.
Figure 5 shows an easily-made simple frame which is adequate if gearbox repairs are not carried out very often. If a greater number of gearbox repairs are undertaken the stand shown in Figure 6, which swivels to allow the gearbox to be positioned either horizontally or vertically, will be found very useful.

1200 Gearbox (non-synchromesh)

Place gearbox on stand and fasten down with rear mounting bolts. Mark rear end-plate then remove caps and differential assembly.
Depending on the reason for dismantling gearbox, it may be useful to check layshaft and pinion shaft end-floats before dismantling further. This could possibly save time during assembly as any correction required can be made whilst gearbox is dismantled. (see page 25).
Prevent pinion shaft from turning by engaging low/slow reverse gear and placing a brass drift between the teeth of pinion and layshaft gears, then remove pinion nut – this is left-hand thread. Remove washer, bearing, distance piece and shims from pinion then withdraw pinion rearwards, leaving the two gears inside the case. On 12-speed gearboxes place slow/normal selector in 'normal' range, to minimise risk of bending selector rod, then drive locating pin out of selector fork. Push selector rod out of end-plate, taking care of detent ball and spring. Extract gear lock from end-plate hole, using a punch with a spot of thick grease on the end, or a suitable magnet.
Push range selector rod rearwards, to reduce risk of rod bending, then drive locating pin from high/low range selector jaw.

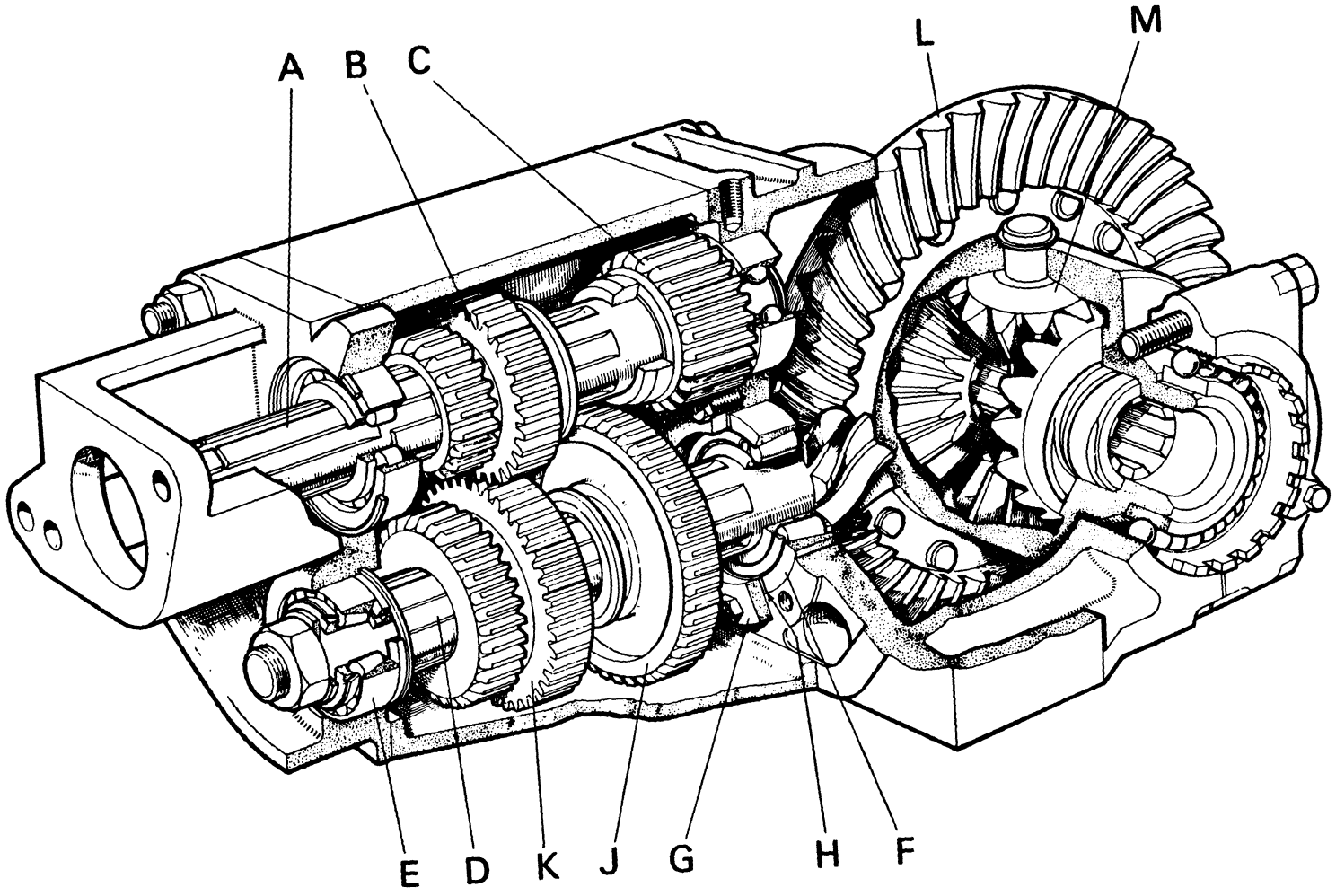

Figure 7. SIX-SPEED GEARBOX — 1200 TRACTORS

A. Top shaft
B. Range pinion
C. Reverse idler
D. Pinion shaft
E. Front bearing
F. Rear bearing
G. Cover plate
H. Shims
J. 1st/reverse gear
K. 2nd/3rd gear
L. Crown wheel
M. Differential

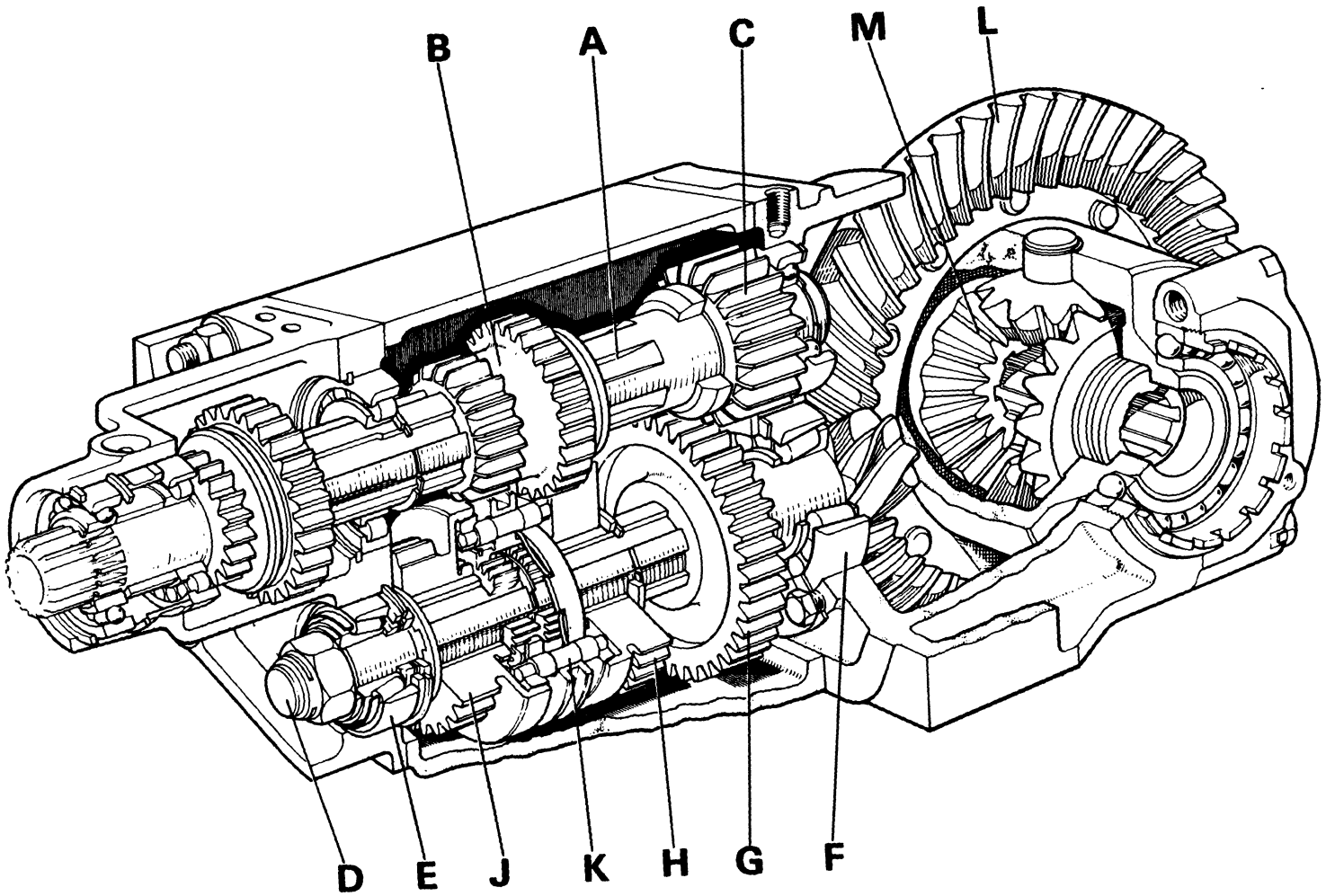

Figure 8. TWELVE-SPEED SYNCHROMESH GEARBOX — 1210 TRACTORS

A. Top shaft
B. Range pinion
C. Reverse idler
D. Pinion shaft
E. Front bearing
F. Rear bearing
G. 1st/reverse gear
H. Second gear
J. Third gear
K. Synchro hub
L. Crown wheel
M. Differential

Lever main gearbox selector into reverse and range selector into low range. Remove the four end-plate nuts and withdraw the two upper bolts. Remove bolt attaching special retaining washer on inside of top shaft rear bearing and separate the two end-plates slightly, by tapping the front end-plate a short distance forward. Remove bolts attaching rear end-plate to stand, then slide end-plate rearwards away from spacer. (Fig. 7). Clamp front end-plate to stand then turn stand so that gearbox is held in vertical position, with front and-plate downwards.

Lift spacer off end-plate, tilting it at the same time so that it clears range selector, then remove layshaft and driven gears. Push range selector rod rearwards so that top shaft can be withdrawn: front bearing will be removed with shaft. Do not remove range selector rod from end-plate unless it is to be renewed, or the detent ball and spring require inspection.

1210 Synchromesh Gearbox

Place gearbox on stand and fasten down with rear mounting bolts. Engage low/slow first gear, so that gearbox can be locked with a brass drift between teeth of auxiliary reduction unit gears, then slacken pinion shaft nut – this is left-hand thread.

Remove Mills pins from 2nd/3rd selector fork, 1st/reverse and 2nd/3rd selector jaws and high/low selector fork. Place 1st/reverse selector rod in central position then remove pins from slow/normal selector fork and high/low selector jaw.
Remove 2nd/3rd selector rod by pushing it forwards; take care of detent ball and spring, which will be released when rod uncovers end-plate hole, and place selector jaw with rod.

Remove pinion shaft nut, washer, inner race, outer stepped distance piece and shims. Unscrew spacer bar, nuts and tap the two upper bolts rearwards until they are clear of front end-plate.
With high/low selector rod in neutral, push slow/normal selector rod forwards out of end-plate – taking care of detent ball, spring and gear lock – then push high/low selector rod rearwards until it is clear of its detent ball.

Hold 1st/reverse selector rod rearwards whilst carefully tapping front end-plate forward. Take care of detent ball and spring, which will be released as end-plate passes end of 1st/reverse selector rod, and remove 1st/reverse selector jaw and slow/normal selector fork when removing end-plate.
Remove retaining bolt from topshaft rear bearing: this is located on rear face of rear end-plate and when removed will allow retaining washer to drop inside gearbox. Push topshaft, complete with high/low range selector, forward and if fork fouls on case push range selector rod rearwards.

Move spacer forward until it is approximately 1 in. (25 mm) clear of rear end-plate, then pull 1st/reverse selector rod forward until layshaft can be removed. Remove the two upper spacer bolts and push spacer as far forwards as possible then slide 3rd gear off pinion and remove the six bearing pads.

Remove front dog clutch from pinion and slide synchro hub and selector fork as far forward as possible so that circlip at front of rear dog clutch can be removed. The rear dog clutch and 2nd speed gear can then be moved forward to gain access to a second circlip at rear of 2nd gear; remove this circlip from its groove then slide 1st gear forward until 1st/reverse selector rod can be removed. (Fig. 8).

Slide spacer carefully forward on its two lower studs, but before removing spacer remove the following.

(a) Synchro hub with selector fork.
(b) Rear dog clutch.
(c) 2nd speed gear, bearing pads and splined washer.
(d) Rear circlip and 1st/reverse gear.

To remove the pinion shaft, mark and remove differential bearing caps. Lift off the differential assembly then withdraw pinion shaft rearwards out of end-plate.

Dismantling Auxiliary Reduction – 12-Speed Gearboxes Only: Return end-plate to horizontal position. Lift out range selector jaw and remove slow/normal selector fork and gear from end-plate. Remove locating pin from end-plate so that auxiliary layshaft spindle can be driven out.
After removing circlip from front end of driving gear, push the shaft rearwards – taking care that rear bearing does not foul on layshaft gear – then lift gear out of end-plate. Lift out layshaft gear and thrust washers.

Gearbox Selector Rods: These need not be removed unless they are to be renewed, or if the detent balls and springs are to be examined. To remove the rods, place one in neutral position then push other rearwards until detent ball is released. The remaining rod may then also be pushed rearwards and the gear lock and detent springs removed.

Assembling the Gearbox: This can be divided into three sections:

(a) Inspection of parts to determine which parts require renewing or rectification.
(b) Adjustment of pinion shaft position and layshaft end-float prior to assembling gearbox.
(c) Assembling gearbox including final adjustment of crown wheel and pinion.

(a) Inspection and Rectification

After thoroughly cleaning all parts examine the gears for chipped or worn teeth and the bearings for any signs of wear or roughness.
Renew any defective parts paying particular attention to the following:

Roller Bearings: If new tapered roller bearings are fitted it is important that the outer track supplied with the new bearing is also fitted as tracks are not interchangeable. Ensure that the new track is fully seated in the end-plate bore, otherwise it will move during service and cause excessive end-float.

Gear Teeth: These should be marked evenly along the length of the tooth. Jumping out of gear will quickly produce uneven tooth marking, due to the progressively higher loading as the teeth slide out of mesh. In some cases the very high pressure can shave metal from the tooth and cause slightly tapered teeth. It is therefore important to carefully examine the gears if jumping-out-of-gear has been experienced and if any irregular teeth markings are apparent on any gear this gear, and also its mating gear, should be renewed.

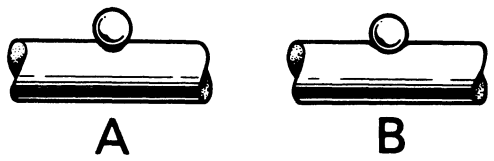

Figure 9.
SELECTOR ROD AND DETENT BALL
A. Correct B. Incorrect

Selectors: If jumping out of gear has been experienced the selector rods, detent balls, springs and spring holes should be checked.
All the selector rods have grooves with straight sides at 60° and use 3/8 in (9.5 mm) diameter detent balls and springs. Check that the balls contact the side of the groove and do not touch the bottom of the groove. If necessary, grind the groove bottom, taking care not to touch the sides, until the ball has sufficient clearance. (Fig. 9).

Check the springs and spring holes: the springs should be renewed if their free-length is less than 1 1/4 in. (31.75 mm) and the spring holes should not be deeper than 1.10 in. (27.94 mm). To measure depth of spring hole, select a short piece of rod same diameter as spring and make a sawcut 1.10 in (27.94 mm) from the end. Place rod in end-plate hole than look through selector-rod hole: if sawcut is below level of selector-rod hole the spring hole is too deep and a suitable shim should be fitted under the spring. (Fig. 10).

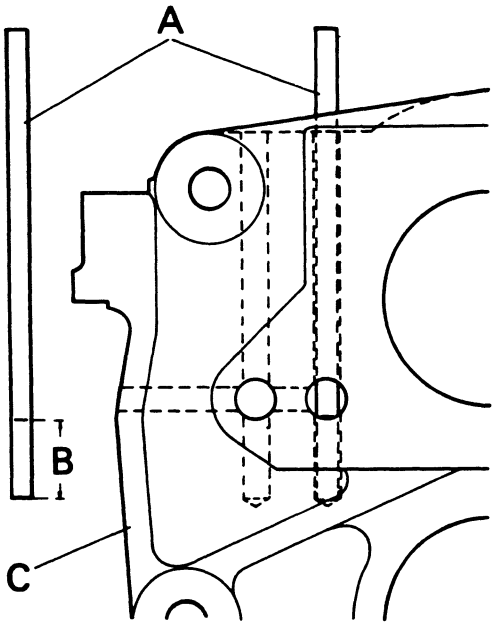

Figure 10.
CHECKING DEPTH OF DETENT SPRING HOLES

A. Test rod
B. 1·10 in. (27·94 mm)
C. End plate

Auxiliary Layshaft Bearings – 12 Speed Gearboxes Only: Layshaft on early gearboxes was mounted on two Torrington needle roller bearings. These were a press fit in the gear bore and a distance piece was fitted to ensure the bearings did not move out of position. Current gearboxes have two cage and roller type needle bearings which run in direct contact with both gear bore and spindle. It is advisable to fit the latest type bearings and distance piece when early type gearboxes are dismantled. (Fig. 11).

Before assembling fit both bearings and distance piece inside gear and check that overall length of bearings and distance piece is 0.010 to 0.050 in. (0.25 to 1.27 mm) less than length of gear, to ensure that bearings are not end loaded when gear is fitted in case.

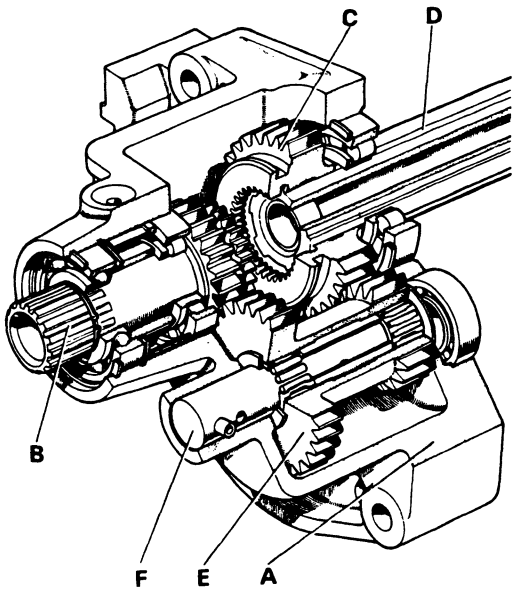

Figure 11.
AUXILIARY REDUCTION UNIT — 12-SPEED GEARBOX

A. Front end-plate
B. Drive gear
C. Driven gear
D. Gearbox mainshaft
E. Layshaft gears
F. Layshaft spindle

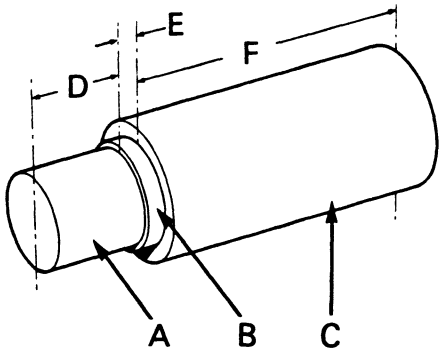

Figure 12.
TOOL FOR REPLACING TOP SHAFT BUSH

A. 1·125 in. (28·57 mm)
B. 1·245 in. (31·62 mm)
C. 1½ in. (38·10 mm)
D. ¾ in. (19·05 mm)
E. ⅛ in. (3·17 mm)
F. 3 in. (76·2 mm)

Input Gear Oil Seal – 12 Speed Gearboxes Only: Check condition of the heart-shaped seal inside the gear bore and renew if damaged. Oil leakage past this seal will contaminate the clutch plates.

Gearbox Tie Bars: The two lower bars are screwed (right-hand thread) into the rear end-plate and do not normally require removing. If the bars are removed, degrease threads and smear with Loctite (960998) before screwing bars into end-plate and fully tightening.

Operation of Synchromesh Mechanism: The dog clutch between second and third gears consists of two inner, fixed, members and an outer, sliding, member. The sliding member incorporates two synchronising rings – one at each side – which are attached together by three waisted pins passing through clearance holes in sliding member. (Fig. 13).
When outer member is in its central (neutral) position both second and third gears are disengaged and free to revolve independently of the pinion shaft.

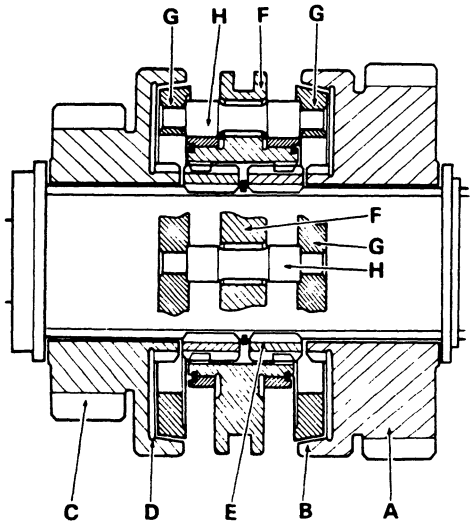

Figure 13.
SYNCHROMESH MECHANISM IN NEUTRAL

A. Second gear pinion
B. Second gear clutch member
C. Third gear pinion
D. Third gear clutch member
E. Fixed members
F. Sliding member
G. Synchronising ring
H. Waisted pin

When gear lever is moved to engage second gear, the outer member is moved rearwards by its selector fork, and coned faces of synchronising ring and gear member are brought into contact. As synchronising ring contacts face of gear member the ring attempts to revolve at same speed as gear and in doing so overcomes tension of centring springs and moves the three waisted pins away from centre of clearance holes in sliding member. When the pins are not in the centre of their clearance holes the sliding member cannot pass freely over the pin shoulders and further pressure applied to the gear lever results in the sliding member pressing against the shoulder corners and pushing synchronising ring harder against gear member face. (Fig. 14).

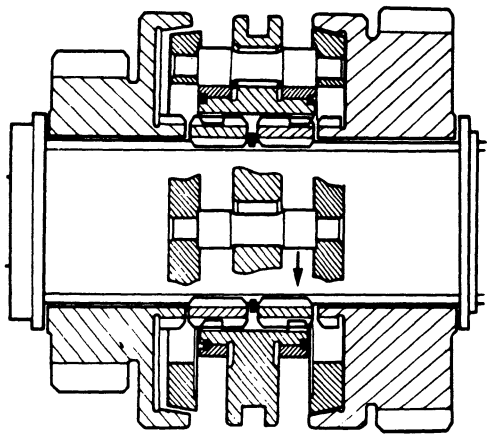

Figure 14.
SYNCHROMESH MECHANISM CHANGING INTO SECOND GEAR
(References as in Figure 13)

When synchronising ring and gear member are pressed together hard enough for the speed of the sliding member to be synchronised with speed of gear the six springs will centralise the pins in their holes and allow member to pass over the pin shoulders. The teeth on member and gear – which are now both rotating at same speed – will then be engaged and the gear locked to the pinion shaft. (Fig. 15).

Inspection of Synchromesh Mechanism: The sliding dog clutch is rivetted together and no attempt should be made to dismantle it. The only parts that can be removed are the six centralising springs, and if any of the springs are broken or worn renew the complete set.
The synchronising rings are faced with molybdenum deposit. This has a sprayed, not smooth, finish and must be handled carefully so that it is not chipped or scratched.

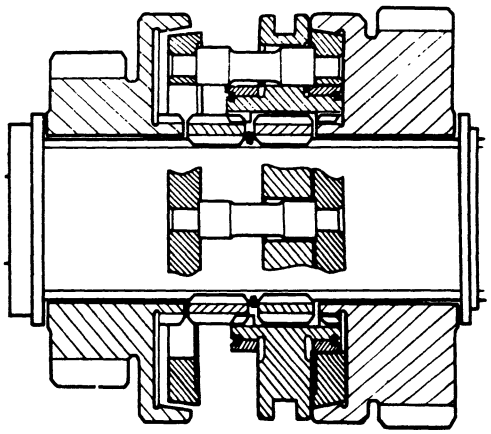

Figure 15.
SYNCHROMESH MECHANISM IN SECOND GEAR
(References as in Figure 13)

(b) Adjustments Prior to Final Assembly

The pinion shaft position is adjusted by shims in front of the rear bearing and these shims can only be changed when the gearbox has been dismantled. Similarly, the layshaft end-float can only be adjusted by adding, or removing, shims after the layshaft has been completely removed. Therefore, if a new crown wheel and pinion, pinion bearings, layshaft or layshaft bearings are being fitted it is necessary to temporarily assemble part of the gearbox to make these adjustments.

Assemble end-plates and spacer; if layshaft requires adjustment remove approximately 0.008 in. (0.20 mm) of shims from behind front layshaft bearing track. Tap bearing track firmly against remaining shims then fit layshaft in position before bolting end-plates together. Tighten the four spacer stud nuts to 70 lb ft (9.7 kg metres) and ensure that all four end-plate lugs are seated on the support stand.

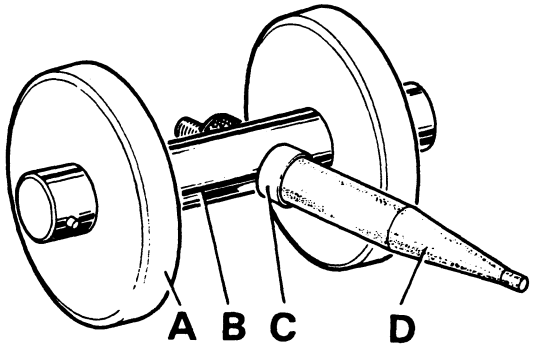

Figure 16.
PINION SETTING GAUGE
(Service Tool DB 8208)

A. Dummy bearings
B. Mandrel
C. Spacer
D. Probe

Measure the layshaft end-float. To obtain a correct reading first spin shaft, to centralise the tapered rollers, then apply an axial load with a forward and backward rotational movement, to fully seat the bearing rollers and eliminate residual clearance.

Repeat this in the opposite direction so that an accurate reading of shaft movement is shown on a dial gauge in contact with the shaft end, then make a note of the shim thickness required to obtain an end-float of 0.002 to 0.004 in. (0.05 to 0.10 mm).

Pinion Setting: Fit pinion shaft without gears, distance piece and shims but with front bearing, washer and nut. Tighten nut, whilst periodically rotating pinion, until pinion cannot be turned by hand — this will ensure that the bearings are fully seated — then unscrew nut until pinion can be turned with only a slight drag.

1. Assemble setting gauge (Service Tool DB8208) by fitting thickest (6.3125 in.) spacer on tool probe and screwing probe as far as possible into tool mandrel. (Fig. 16). Mount tool on end-plate, fitting dummy bearings in end-plate bores and bolting bearing caps in position to hold tool in place.
2. Slide mandrel to bring probe into position and unscrew probe until probe tip makes light contact with rear face of pinion bearing or, if pinion is fitted with a circular trough, the rear face of trough. Tighten locknut to prevent probe turning then recheck that it is making light contact with bearing or trough. (Fig. 17).
3. Check the correction figure etched on pinion face. If this figure is negative (—) subtract it from 0.030 in. and if it is positive (+) add it to 0.030 in. Subtract the resulting figure from the gap between spacer and mandrel — which should be measured with a feeler gauge — to obtain the thickness of shims required to set the pinion in its correct position, e.g., if pinion is marked —.007 and gap measures 0.057 in. then

   0.030 — 0.007 = 0.023 in. and shims required are
   0.057 — 0.023 = 0.034 in.

   If pinion had been marked + 0.007 then

   0.030 + 0.007 = 0.037 in. and shims required are
   0.057 — 0.037 = 0.020 in.

   After rechecking the figures, make a note of the shim thickness required and remove tool from end-plate. Remove pinion and separate the two end-plates. Tap rear bearing track out of end-plate bore, fit shims of required thickness in bore, and refit track, tapping it firmly against shims and bearing plate.

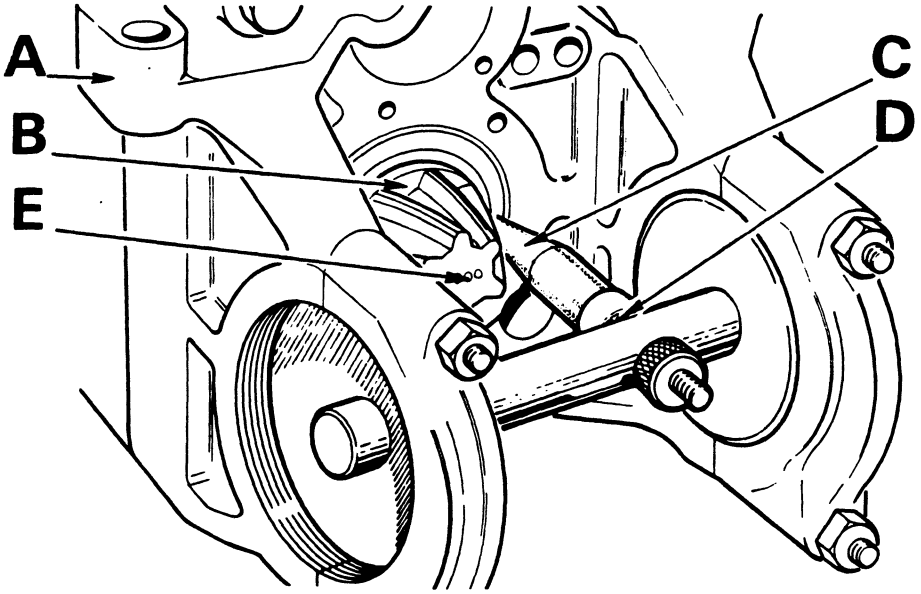

Figure 17.
CHECKING PINION SETTING DISTANCE

A. Rear end-plate
B. Pinion bearing
C. Probe
D. Measured gap

If layshaft end-float requires correction, remove bearing track and fit shims previously noted, then refit bearing track. On 1200 gearboxes, the shims were first fitted inside front bearing track, but changed to behind rear bearing on later gearboxes. On 1210 gearboxes, shims should be fitted at front or rear according to dimension of shoulder at front of layshaft. (Fig. 18).

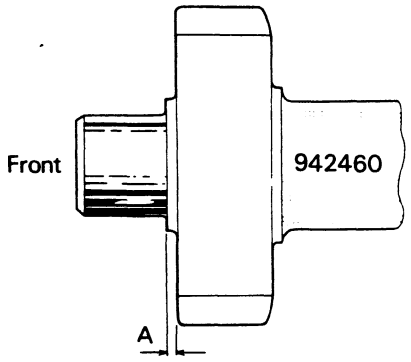

Figure 18.
LAYSHAFT — 1210 GEARBOX

When 'A' is 0·130–0·120 in. (3·30–3·05 mm) shim front bearing
When 'A' is 0·160–0·150 in. (4·05–3·80 mm) shim rear bearing

(c) Assembling Gearbox

1200 Non-Synchromesh Gearbox

Clamp front end-plate to stand, horizontally as when in tractor.

Replace first/reverse detent spring and ball in end-plate hole then hold ball against spring with a suitable tool (Fig. 19) and push selector rod into position. Hold rod against tool, so that it is partially over ball, then withdraw tool and push rod completely over ball. Place rod in neutral position then replace gear lock plunger. Push plunger against selector rod then replace second/third selector rod in same manner as previous rod.

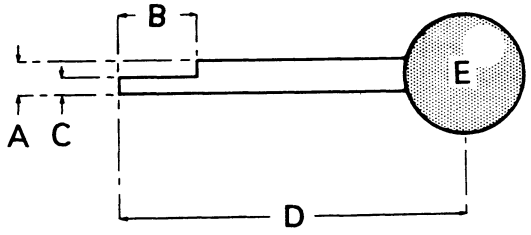

Figure 19.
TOOL FOR COMPRESSING DETENT SPRINGS

A. $\frac{3}{8}$ in. (9·5 mm)
B. $\frac{5}{8}$ in. (15·9 mm)
C. $\frac{3}{16}$ in. (4·8 mm)
D. 6 in. (150 mm)
E. Gear lever knob

On 12-Speed Gearboxes: Fit needle roller bearings and distance piece in auxiliary layshaft gear then place gear loosely in end-plate. Fit driving gear in position – front bearing and outer track of rear bearing should already be in end-plate – then carefully tap gear into position. Ensure that roller bearing does not foul layshaft and fit circlip in groove at front of gear. Fit thrust washers at each end of auxiliary layshaft then align gear and washers with end-plate hole and fit spindle. Align spindle with hole in case then fit locating pin.

Locate driven gear on driving gear and position selector rod, using same tool as for other selector rods. Slide range selector jaw on rod but do not fit locating pin through jaw.

Replace gear locking plunger. Push plunger down until it is against range selector rod then fit slow/normal detent ball and spring. Insert slow/normal selector rod into end-plate, using same tool to compress detent spring, and sliding rod through selector fork. Do not fit locating pin through selector fork and rod.

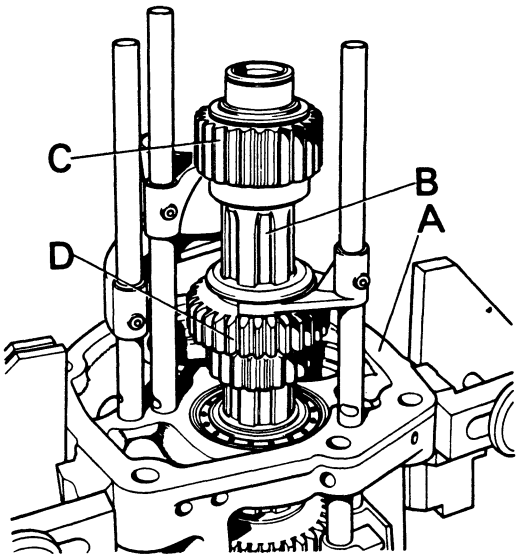

Figure 20.
ASSEMBLING GEARBOX

A. Front end-plate
B. Mainshaft
C. Reverse idler
D. Range pinion

Fit reverse idler gear on mainshaft and fit thrust washer, with flat face of washer towards gear. If new bearings are being fitted, press these into position on shaft.

Turn end-plate so that remainder of gearbox can be assembled vertically on top of it. Lift range selector, so that range gear on mainshaft can be engaged in fork as shaft is placed in position, then push shaft down into end-plate.

Stand layshaft in its front bearing and fit the two pinion shaft driven gears in position in their respective selector forks, positioning the gears so that shaft splines are in line. (Fig. 20). With range selector in low and main selector in reverse gear, fit spacer on front end-plate. Tilt and rotate spacer slightly and lower slowly into position so that it does not disturb the pinion shaft gears.

Lower rear end-plate on to spacer, guiding the three selector rods into end-plate holes at the same time. When main shaft rear bearing is seated in end-plate, fit special retaining washer and bolt: obtain access to washer through pinion aperture and lock bolt with tab washer after tightening to 8 lb ft (1.1 kg metres).

Lower pinion shaft into position so that it holds the two gears in their selector forks, then turn gearbox into horizontal position and clamp down with the rear mounting bolts.
Fit upper tie bars through end-plates and replace all four tie-bar nuts. Tighten nuts to 70 lb ft (9.7 kg metres) then check that both front end-plate lugs are firmly seated on the support stand: if not, slacken tie-bar nuts and tap end of bars to allow end-plate to align itself before retightening nuts.

Place the two spacers with the existing shims and an additional 0.008 in. (0.20 mm) shim between on pinion shaft, so that pinion will have a measurable amount of end-float, then replace bearing, washer and nut. Move selectors to engage LS first gear, lock gearbox by placing a brass drift between teeth of drive gear and auxiliary layshaft gear then tighten pinion nut to 200 lb ft (27.7 kg metres). (Fig. 16).
With pinion nut fully tightened measure end-float of pinion. Rotate pinion whilst applying an axial load, first in one direction and then the other, so that an accurate end-float reading is shown on a dial gauge mounted against the shaft end.

When a correct reading has been obtained remove the pinion nut, washer and bearing. Remove first spacer and remove shims equal in thickness to the total end-float reading from behind spacer, then replace spacer, bearing, washer and nut. When the pinion nut is fully tightened the pinion bearings should then have the correct setting of 0.002 in. (0.05 mm) end-float to 0.002 in. (0.05 mm) preload.

If a 12-speed gearbox, partially withdraw the slow/normal selector rod so that the locating pin can be fitted through range selector jaw and rod, taking care not to disturb the gear lock plunger. Push selector rod back into position then fit locating pin through selector fork and rod.

Lift differential assembly into position on rear end-plate; crown wheel on right-hand side. Replace bearing adjusters and caps, ensuring that marks on caps and end-plate are aligned, then adjust bearing end-float. (see page 17).

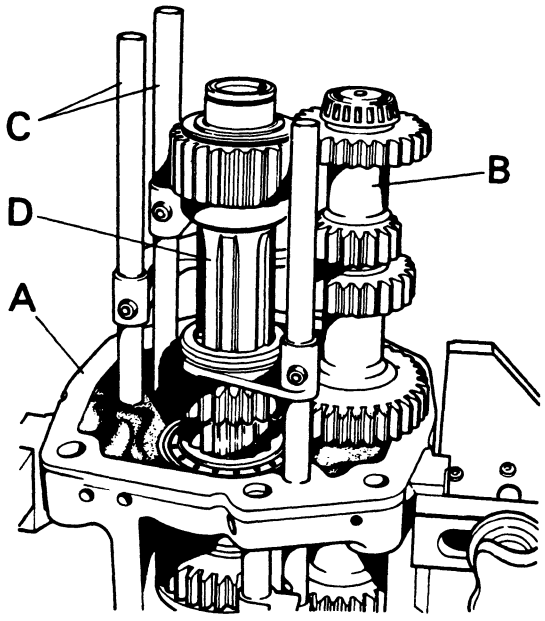

Figure 21.
FITTING LAYSHAFT

A. Front end-plate
B. Layshaft
C. Selector rods
D. Mainshaft

1210 Synchromesh Gearbox

Place the two needle roller bearings, with distance piece between them, inside auxiliary layshaft. Push layshaft spindle – plugged end rearwards – far enough into front end-plate to allow a thrust washer to locate on its end then place layshaft – largest gear at front – inside end-plate. Press spindle into gear and replace rear thrust washer before aligning holes in spindle and plate so that locating pin can be fitted.
Fit inner circlip in input gearbox and press ball bearing into bore – from front – until it is against circlip then fit outer circlip.Replace outer spacer followed by outer track of roller race – flanged side of track to front. Press inner section of roller race on to driving gear. Fit inner spacer on gear, smear seal inside gear with high-melting-point grease then pass gear through back of end-plate and into ball race. Push gear "fully home" and fit circlip at front of gear.
Fit outer track of main shaft roller bearing – flanged side of track to front – into end-plate bore until it is pressed against circlip.
Replace distance piece and pinion outer bearing track – thickest edge of track towards distance piece – and press track against distance piece and circlip. Replace main shaft rear bearing in end-plate; fit shims behind bearing and replace locating bolt and special washer when bearing is "fully home". Tighten bolt to 8 lb ft (1.1 kg metres) then lock with tabwasher.

Having previously fitted the correct thickness of shims behind outer track of pinion bearing, place pinion in end-plate and replace differential assembly. Align marks on bearing caps and fit bearing adjusters but do not lock tabwashers on cap bolts. Tap a suitable hard wood wedge between differential cage and pinion end, so that pinion is held firmly in its rear bearing.

Slide spacer on to lower studs then fit low/reverse gear on pinion – selector groove towards rear – followed by circlip and splined washer. Fit second gear – synchro face at front – on pinion. Smear six bearing pads with grease and slide these in position inside gear then replace first fixed dog clutch, ensuring that **face with centre-punch mark is towards front.** Slide second circlip on shaft, but not far enough to locate in its groove.

Replace sliding dog clutch assembly together with its selector fork. Observe position of centre-punch mark on first dog clutch then replace second dog clutch with its **centre-punch mark at rear and opposite the mark on first clutch.** Locate 1st/reverse selector fork in gear groove and selector rod in end-plate then push spacer fully rearwards, locating both circlips in pinion grooves at the same time.

Fit third gear on pinion – synchro face towards rear – smear remaining six pads with grease and slide these inside gear. Smear splined washer with grease, to hold it in position until front end-plate is fitted, then fit washer and plain distance piece.
Place layshaft, with a bearing at each end, inside spacer and enter rear bearing into its track in end-plate.
With main shaft fully assembled – reverse gear and thrust washer at rear, range pinion in centre and circlip spacer washer and roller bearing at front – fit high/low selector fork into pinion groove. Ensure that Mills pin boss is at rear of selector fork and push shaft through rear bearing then fit circlip on shaft end.

Place 1st/reverse detent spring and ball in assembled front end-plate, fit slow/normal gear – with selector fork – on top shaft then slide end-plate up to spacer. Allow selector rods to enter end-plate holes and hold 1st/reverse ball down against spring with tool shown in Figure *19* until selector rod is entered over ball. Push end-plate against spacer, guiding layshaft into its bearings at same time.

Move 1st/reverse gear selector rod into its neutral position then fit gear locking plunger in place. Fit 2nd/3rd gear detent ball and spring in end-plate hole then push rear end of selector rod into end-plate, threading selector jaw on to rod at same time and pressing detent ball against spring as previously. Hold 2nd/3rd selector fork stationary whilst pushing rod through fork and into rear end-plate. Push the two long bolts through rear end-plate, spacer and front end-plate then fit the four nuts and tighten evenly to 70 lb ft (9.7 kg metres).

Refit original shims plus an additional 0.008 in. (0.20 mm), to give pinion a measurable amount of end-float, then replace stepped spacer – step towards front – bearing, special washer and nut. Tighten nut to 200 lb ft (27.7 kg metres) then measure pinion end-float. Rotate pinion whilst applying an axial load, first in one direction and then in another, so that an accurate end-float reading is shown on a dial gauge mounted on end-plate and in contact with shaft end.

When an accurate end-float reading has been obtained, remove pinion nut, washer and bearing. Withdraw stepped spacer and remove shims equal in thickness to the end-float reading, then replace spacer – step towards front – bearing, washer and nut. Tightening the nut to 200 lb ft (27.7 kg metres) will then give the correct bearing setting of 0.002 in. (0.05 mm) end-float to 0.002 in. (0.05 mm) preload.

Push range selector rod forward through rear end-plate and into selector fork. Fit detent ball and spring in front end-plate hole, taking care they do not drop into gearbox, then push rod over ball. Ensure that slow/normal selector fork is fitted in its gear then push range selector rod through its selector jaw.
With range selector rod in its neutral position, fit range gear locking plunger and slow/normal detent spring and ball then push slow/normal selector rod through its fork and end-plate until it reaches its neutral position.
Align all selector rod holes with forks and jaws then fit new Mills pins – old pins tend to be reduced in diameter when they are driven out.

Repairs with 12-Speed Gearbox in Situ: When the clutch is removed it is possible to work on the auxiliary reduction unit and using this method can save time in the following circumstances:

(a) When a clutch repair is being carried out and it is found necessary to renew the drive gear, due to early type splines on clutch shaft and muff coupling being excessively worn. Later type, 16-spline, parts can then be fitted without removing gearbox.

(b) When a failure is found to be only associated with the auxiliary reduction section; this could occur if lubrication to gearbox had, for any reason, been interrupted. If the gearbox end-plate is not damaged, this repair can be carried out without removing the gearbox.

Dismantling Auxiliary Reduction Unit: With clutch assembly removed, slide external circlip from driving gear and internal circlip from end-plate – a pair of substantial circlip pliers will be required for this. Using a soft-faced hammer, carefully tap driving gear towards rear until it touches main driveshaft. Insert a suitable flat-ended tool, such as a small chisel or screwdriver into one of the driving gear splines so that it can be wedged tightly between ball bearing and gear. Tap gear gently forward, ensuring that ball bearing is also pushed forward at same time, and when gear is fully forward release wedge then tap gear rearward without moving ball race. Repeat this procedure until ball bearing has been pushed clear of end-plate and can be removed. (Fig. 22).
Remove circlip from inside bearing bore in end-plate and remove spacer. The driving gear, complete with roller bearing, can now be pushed forward out of end-plate. If only the driving gear is being replaced no further dismantling is necessary.

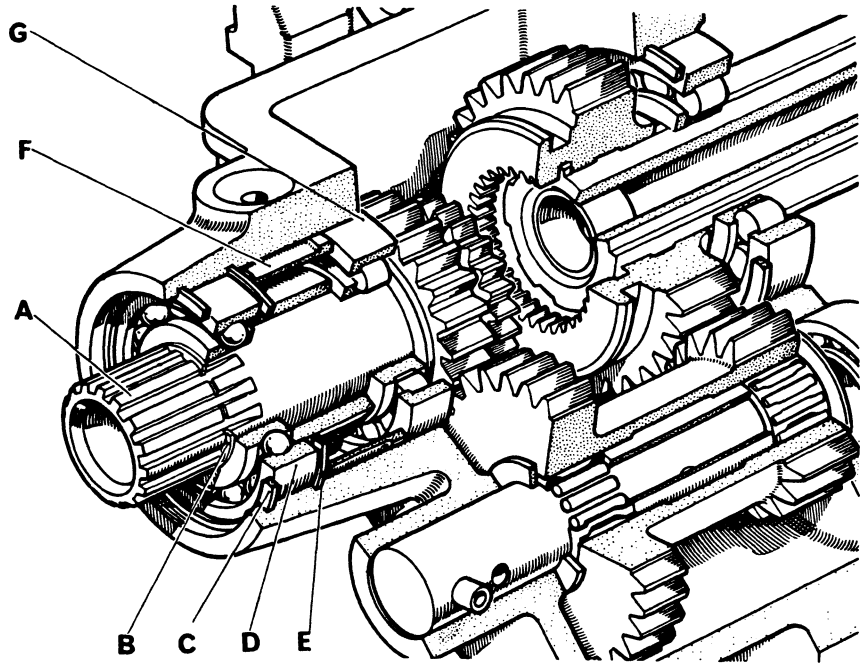

Figure 22. DRIVE GEAR — 12-SPEED GEARBOX

A. Driving gear
B. Circlip (gear)
C. Outer circlip
D. Ball bearing
E. Inner circlip
F. Distance piece
G. Roller bearing

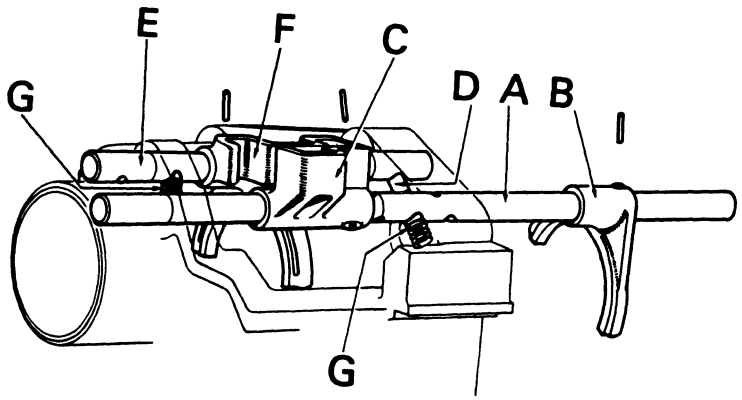

Figure 23. CREEPER AND RANGE SELECTOR RODS

A. Range selector rod
B. Range selector fork
C. Range selector jaw
D. Gear locking plunger
E. Creeper selector rod
F. Creeper selector jaw
G. Detent balls and springs

Auxiliary Reduction Unit Removal: Release pinion shaft nut: this is left-hand thread. Slide range selector into rear position and slow/normal selector rod into forward position, to reduce risk of bending rods when driving locating pins out. Remove locating pin from slow/normal selector and push selector rod forward, *taking care not to lose the detent ball and spring.* Remove ball and spring but do not attempt to remove gear locking plunger: this can be done later without danger of it falling into main section of gearbox. Place a cloth under the range selector fork: access to this can be obtained through lubrication slot in gearbox spacer. Drive locating pin out of range selector fork then retrieve pin from cloth with a small magnet. (Fig. 24).

Remove lubrication pipe from front end-plate and remove pin locating auxiliary layshaft spindle in the end-plate. Remove pinion-shaft nut, washer and bearing then replace nut, to prevent distance pieces and shims being displaced.

After removing tie-bar nuts, tap end-plate forward approximately 1 in. (2.5 mm) then very carefully remove gear-locking plunger. Place a hand between end-plate and spacer to catch plunger and prevent it falling into main section of gearbox. Remove range detent ball from spring in a similar manner.

Lift out slow/normal driven gear and selector fork.

Push auxiliary layshaft spindle forward, using a suitable bent rod inserted between end-plate and spacer, until layshaft gear can be lifted out of end-plate.

Assembling Auxiliary Reduction: Re-assemble in reverse order of dismantling, paying particular attention to the following:

(1) Always use latest type layshaft, bearings, distance piece and thrust washers. Lubricate all parts with transmission oil during assembly.

(2) When sliding end-plate back into position ensure that the layshaft in main section of gearbox is not trapped but rotates freely.

(3) After tightening tie-bar nuts to 70 lb ft (9.7 kg metres) check that both end-plate lugs are seated on main frame. If not, release nuts then gently tap end of tie bars so that end-plate can align itself then retighten nuts.

(4) Before fitting slow/normal selector rod, push range selector into rear detent position, otherwise gear-locking plunger will prevent selector rods being refitted.

(5) After replacing driving gear engage slow, low range first gear and place a brass drift between driving gear and layshaft to lock transmission tighten pinion-shaft nut to 200lb ft (27.7 kg metres).

(6) Ensure that lubrication pipe is correctly located in front end-plate. When re-assembly is complete, remove range gear-lever ball-housing so that lubrication supply can be observed when engine is started. (Fig. 4).

Differential assembly

The differential is mounted on the gearbox rear end-plate and permits the two rear wheels to rotate at different speeds whilst equal driving torque is being transmitted to both wheels. As differential action is essential to allow the tractor to turn from a straight course – but limits wheel grip by allowing one wheel to remain stationary when other is spinning – a lock is fitted so that the differential can be put out of action (Fig. 25).

The differential lock is controlled by a foot pedal on right-hand side of tractor and when the pedal is depressed a sleeve on spur-pinion shaft slides into engagement with differential cage and gives a solid drive to both wheels. Maximum wheel grip is thus obtained, but as both wheels can only rotate at the same speed the tractor will tend to travel in a straight line and make it impossible to turn sharply. For this reason *the differential lock must not be engaged when travelling at high speed or on the highway* as the unexpected failure of the tractor to respond to the steering could have serious consequences.

The differential-lock sleeve is spring loaded so that it returns to the disengaged position when released, but as the sleeve is most likely to be under torque – and pressure against shaft splines will prevent spring from sliding sleeve along shaft – the lock will not always disengage immediately pedal is released. If pedal therefore remains down when it is released, the lock is engaged and no attempt should be made to turn tractor sharply until pedal has sprung upwards: if necessary, momentarily depress each brake pedal in turn to release the torque and allow lock to disengage.

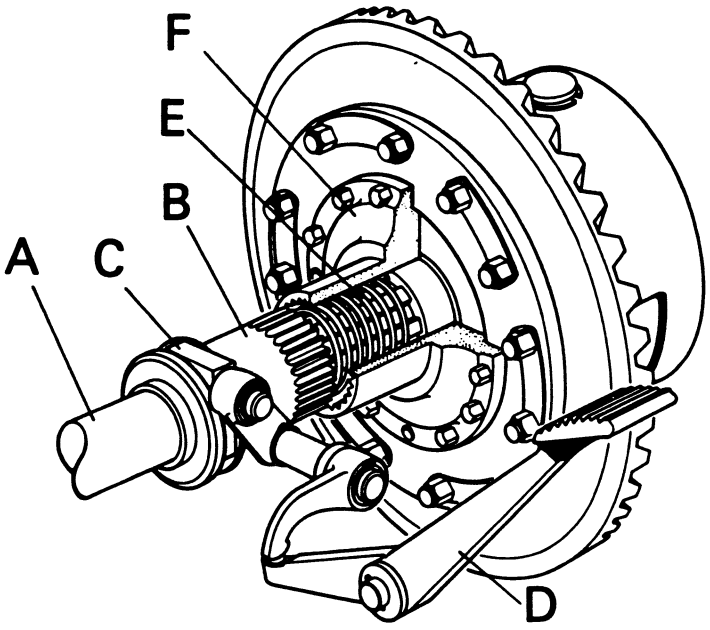

Figure 24. DIFFERENTIAL LOCK

A. Spur pinion shaft
B. Sleeve
C. Operating fork
D. Pedal
E. Return spring
F. End plate — differential cage

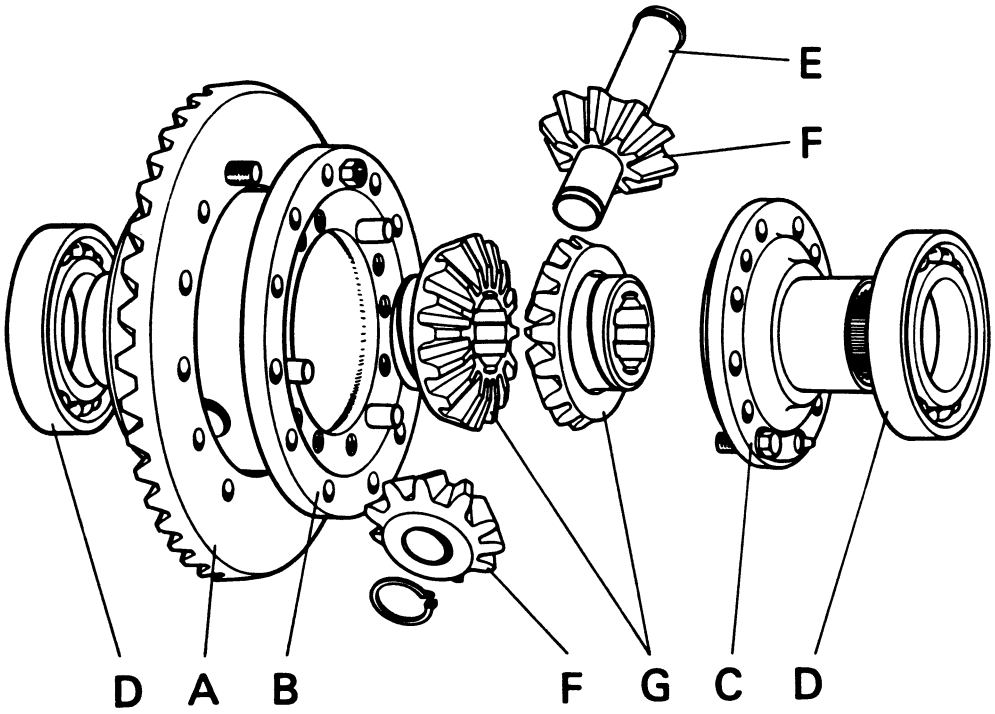

Figure 25. DIFFERENTIAL ASSEMBLY

A. Crown wheel
B. Cage
C. End plate
D. Ball thrust bearing
E. Pin
F. Bevel pinions
G. Bevel gears

OPERATION K1b

Dismantling and Assembling Differential: Mark end-plate caps so they can be refitted in same position: caps are bolted to end-plate before final machining and are not, therefore, interchangeable. Support differential whilst removing cap bolts then lift assembly from gearbox end-plate.

Lay assembly on bench, unlock tabwashers and remove bolts from cage end-plate. Mark position of cage and end-plate then tap end-plate off dowsel. Remove circlips from differential pin then tap pin out of cage and remove pinions. (Fig. 26).
Crown wheel is bolted to differential cage and need not be removed unless it is to be renewed. Crown wheels and pinions are matched during manufacture and must not be interchanged. Replacement crown wheels and pinions obtained from Parts Department are wired together and care must be taken to ensure that they do not become detached during storage. If a crown wheel or pinion becomes worn it must not be renewed singly but should be replaced with a matched pair of gears.

Examine differential side bearings and renew if they show any signs of roughness. As the bearings are angular contact type they cannot be removed by holding the outer track but must be removed with an extractor, such as Service Tool 960605, which pulls against the bearing inner track. When pressing new bearings on to cage and end-plate ensure that bearings are fitted so that word 'THRUST' stamped on bearing outer track is facing away from differential and will be against bearing adjusters when fully assembled.

If a new crown wheel is being fitted first bolt this on differential cage. Ensure that wheel fits flat against cage face and tighten bolts evenly to 50 lb ft (6·90 kg metres) before locking with tabwashers.

Smear faces of bevel gears and pinions with anti-scuffing paste. Place a bevel gear inside cage and place the two pinions in position on gear. Align pinions with hole in cage and fit differential pin through cage and pinions. Locate pin in cage by fitting a circlip at each end.
Place remaining bevel gear on pinions and fit end-plate on cage. Ensure the marks made during dismantling are aligned and end-plate fits flat against cage face. Fit tabwashers so that they cover ends of dowels then replace bolts. Tighten bolts evenly to 30 lb ft (4.2 kg metres) then lock with tabwashers.
When fitting a new end-plate on cage ensure that plate is fitted so that dowels are located in the three special dowel holes. As the dowel holes are only slightly smaller than the bolt holes, to assist identification a small indentation is made adjacent to one of the dowel holes.
Lift differential assembly into position on end-plate, crown wheel on right-hand side of pinion, and replace bearing caps. Use location marks to ensure caps are fitted in their original positions and screw bearing adjusters into position before tightening cap bolts.

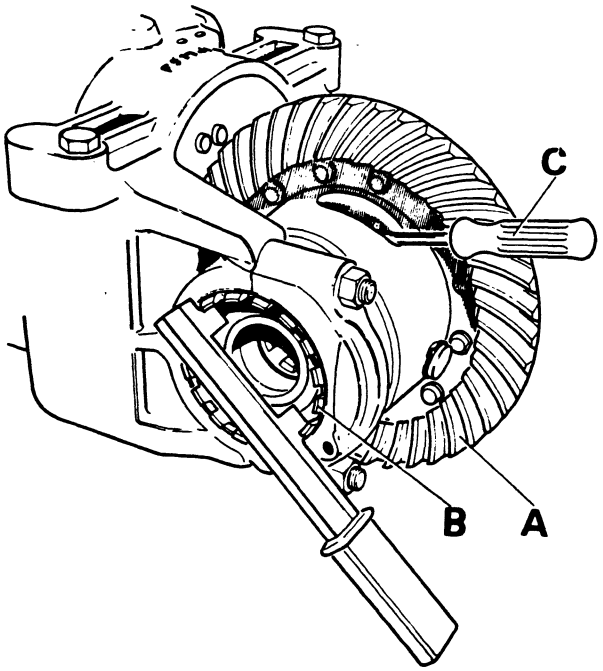

Figure 26
ADJUSTING DIFFERENTIAL BEARINGS

A. Crown wheel
B. Bearing adjuster
C. Screwdriver

OPERATION K1c

Adjusting Bearing End-Float: Turn left-hand adjuster fully inwards so that maximum amount of backlash is obtained between crown wheel and pinion. Tighten right-hand adjuster whilst tapping bearing caps and differential cage with a copper hammer, to ensure bearings are fully seated against adjusters, until the bearings have a slight drag. Insert a 12 in. (30 cm) plastic handled screwdriver into hole in differential cage and set crown wheel so that screwdriver is just above horizontal position. This will result in a small off-centre weight and if the left-hand adjuster is now slowly unscrewed until the off-centre weight is sufficient to move the differential assembly within the limits of the teeth backlash this will give the correct bearing setting of no preload to 0.002 in. (0.05 mm) end-float. It is very difficult to make this setting using a dial gauge, due to possible flexing of the bearing caps. (Fig. 26).
Having obtained the correct bearing settings, *clearly mark the bearing adjusters* then turn both adjusters *an equal amount* (left hand outwards and right-hand inwards) until backlash between crown wheel and pinion is 0.007 to 0.009 in. (0.18 to 0.23 mm). Check backlash at three equally spaced teeth and if readings vary slightly use the smallest reading. Mark tooth with smallest reading and take all subsequent readings from this tooth. Measure the backlash with a dial gauge mounted at right-angles to a crown-wheel tooth and when correct, tighten bearing cap bolts to 120 lb ft (16.6 kg metres). Recheck tooth backlash after tightening cap bolts, re-adjust if necessary then lock clamp bolts with tabwashers and fit bearing adjuster locking plates.

Crown Wheel and Pinion Adjustment: To obtain long life and quiet running of crown wheel and pinion it is essential that they are correctly meshed. Adjustment is therefore provided so that both crown wheel and pinion can be moved to bring the teeth into correct mesh. Pinion location is by means of shims fitted at the front of the rear bearing and any change in thickness of these shims will move the pinion nearer, or further, from the crown wheel. As it is necessary to completely strip the gearbox to change the thickness of the pinion shims the easiest method of setting the gear mesh is to set the pinion in the correct position when assembling the gearbox so that when the crown wheel backlash is set the gear mesh is correct and no further pinion adjustment is required. The method of setting the pinion in its correct position is given on Page 10 , as this must be done before final assembly of gearbox. Crown wheel adjustment is by means of a ring nut against each side bearing. Screwing the ring nuts in, or out, then moves the differential cage to take the teeth in, or out, of mesh as required.

Crown Wheel Tooth Marking: If the pinion is set to its correct setting distance and the crown wheel backlash is correct it is not normally necessary to check the crown wheel marking. The only exception to this is if the new bearings are fitted to a pinion which has been in operation for a large number of hours. In this case the pinion may require a small correction to compensate for slight tooth face wear.

Checking the Tooth Marking: Lightly coat about a dozen crown-wheel teeth with marking blue, or red lead mixed with a little oil, and rotate the crown wheel backwards and forwards so that the coated teeth are rolled to and fro against the pinion: a slight pressure against the pinion will load the gears and give a clearer mark.
When sufficient rotation has been made to squeeze the marking out of the teeth and leave a bare area the exact size, shape and location of the contact, examine the contact mark on drive side of the crown wheel teeth: mark on overrun side of teeth will be correct when drive side mark is correct.

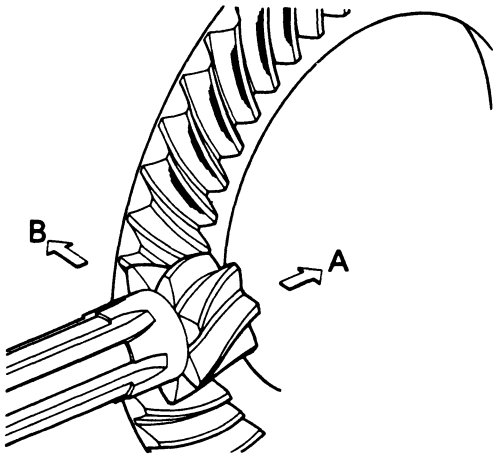

Figure 27.
HIGH TOOTH CONTACT
A. Contact adjustment
B. Backlash correction

High tooth contact (Fig. 27) indicates that pinion is too far out. Add shim behind pinion rear bearing, to move pinion inward, then adjust crown wheel away from pinion to restore correct gear backlash.

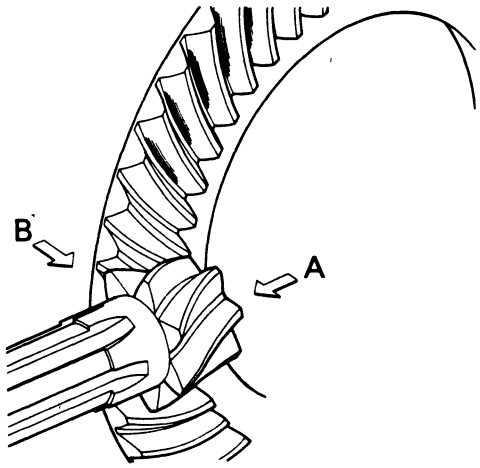

Figure 28.
LOW TOOTH CONTACT
A. Contact adjustment
B. Backlash correction

Low tooth contact (Fig. 28) indicates that pinion is set too deep. Remove shim from behind pinion rear bearing, to move pinion outward, then adjust crown wheel towards pinion to restore correct gear backlash.

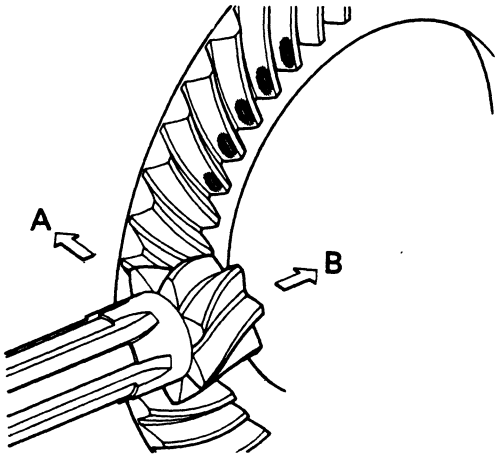

Figure 29.
SHORT TOE CONTACT
A. Contact adjustment
B. Backlash correction

Short toe contact on tooth (Fig. 29) indicates that crown wheel away from pinion will increase the length of contact area and also move area towards heel of tooth.
To restore correct gear backlash it is also necessary to remove shims from behind pinion rear bearing.

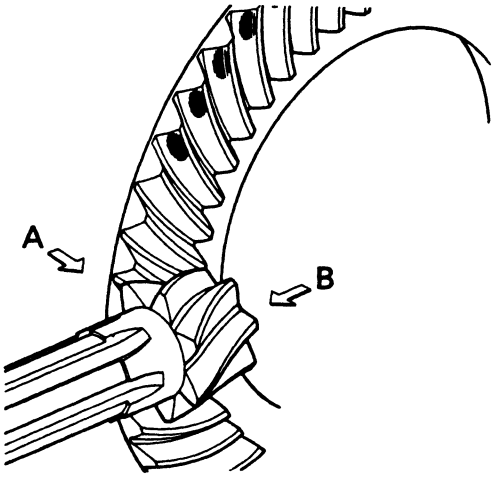

Figure 30.
SHORT HEEL CONTACT
A. Contact adjustment
B. Backlash correction

Short heel contact on tooth (Fig. 30) indicates that crown wheel is too far away from pinion. Adjusting crown wheel closer to pinion will increase length of contact area and move area towards toe of teeth. To maintain correct gear backlash it will also be necessary to add shims behind pinion rear bearing.

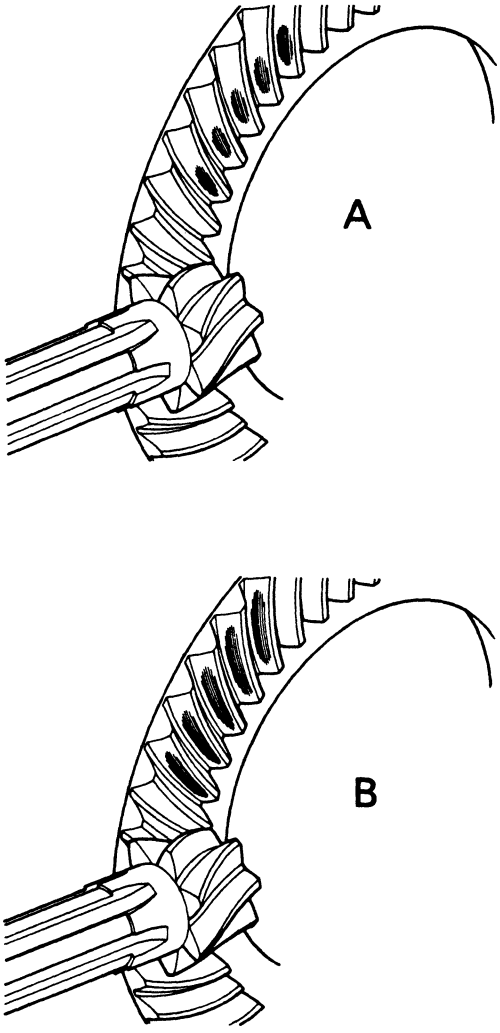

Figure 31.
SATISFACTORY TOOTH CONTACT
A. Gears unloaded
B. Gears under operating load

Satisfactory tooth contact (Fig. 31) is roughly an elongated oval shape, nearer to the toe than the heel and covering the depth of the tooth flank. When under operating load the tooth contact will then spread to almost the full length of the tooth. More than one adjustment of crown wheel and pinions may be necessary to obtain correct tooth marking, and as it is necessary to strip the gearbox to adjust the pinion bearing shims, adjusting the gears by means of the tooth marking should only be carried out if the correct pinion setting distance does not give a satisfactory tooth mark.

OPERATION K2

Removing and Replacing Gear Selector Levers: Remove bolts attaching housing to gearbox cover – three on gear lever and four on range lever – then remove housing and lever.
To remove lever from housing, unscrew lever knob and slide dirt excluder off lever then remove support plate from underside of housing (Fig. 32).
Pack inside of housing with grease before replacing gear lever and support plate. After tightening support plate bolts, securely lock with tabwasher. Fit a new gasket on housing and replace housing on gearbox cover, ensuring that lever is correctly positioned in selector jaws.
On 12-speed tractors a baulk spring is attached under the gearbox cover to hold the range lever towards the high/low range selector Jaw.

Dirt Excluders: The rubber dirt excluder fitted on each gear lever prevents dirt and water entering main frame and contaminating the transmission oil. It is, therefore, essential that excluders are maintained in good condition to prevent dirty transmission oil affecting the hydraulic system.
Always examine excluders when changing transmission oil and replace excluders that are torn or do not grip the lever tight enough to make a seal.

To replace an excluder, unscrew lever knob and push spring clip upwards with a large screwdriver until it is clear of housing. Wipe lever clean and smear inside of housing with grease before fitting new excluder. As retaining clips cannot be replaced satisfactorily without a special tool, secure excluder with a suitable hose clip.

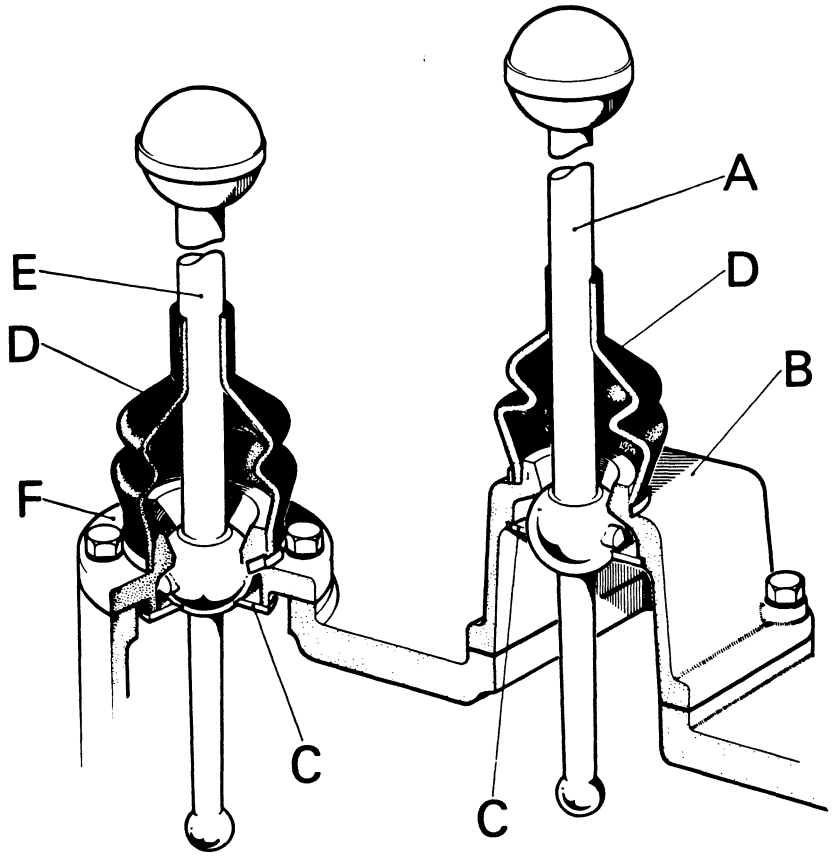

Figure 32. GEAR SELECTOR LEVERS

A. Range lever
B. Housing
C. Support plate
D. Dirt excluder
E. Gear lever
F. Housing

OPERATION K4

Removing and Replacing Reduction Unit: With tractor standing on firm and reasonably level ground, raise rear of tractor and place substantial supports under rear axle. Remove rear wheels and unscrew brake adjusting nut to end of rod, otherwise shoes may bind in drum and prevent reduction unit being removed.

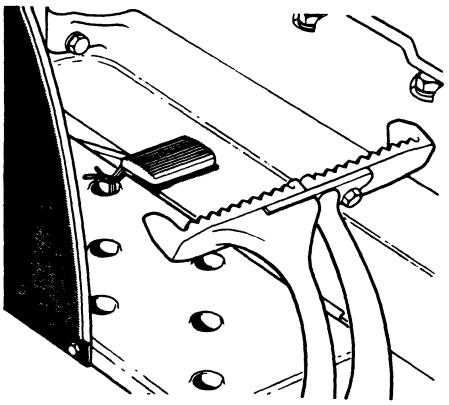

Figure 33.
DIFFERENTIAL-LOCK PEDAL
LOCKED IN ENGAGED POSITION

If the right-hand reduction unit is being removed, depress differential lock pedal and wire the operating lever upwards so that differential lock sleeve is held in the engaged position. *If this is not done the sleeve will be displaced when reduction unit is withdrawn and will have to be refitted before the reduction unit can be replaced.* (Fig. 33).

Remove nuts from studs through end of axle case and disconnect stabiliser bars, if fitted. Drain oil from unit.

As the reductions are quite heavy and require to be withdrawn horizontally until spur pinion shaft is clear of oil seal in end of axle case, some method of supporting the weight is advisable. Withdraw unit until studs are clear of their holes then allow unit to turn and place a trolley jack under the case cover. Raise the jack until it just takes the weight and permits the complete assembly to be withdrawn. Hold the unit vertical whilst pulling the jack squarely away from tractor, so that pinion shaft does not jam in axle case oil seal. (Fig. 34).
Before replacing a reduction unit first examine the brake shoes and axle case oil seals. Reline brake shoes if linings are excessively worn and fit new oil seals if they are damaged or leaking (see Page 23).
If the differential lock sleeve has become displaced, due to the lock not being held firmly in engaged position whilst reduction unit is removed, it will be necessary to remove the right-hand oil seal housing and replace sleeve in its correct position before reduction unit can be refitted (See Page 2).

Clean brake shoes and end of axle case. Smear inside of oil seals with grease and wipe inside of brake drum. Whilst supporting weight of unit in same manner as during removal, enter spur pinion shaft into oil seal and move unit until shaft end enters differential. It will probably be necessary to turn the wheel flange to align shaft splines with splines in differential gear: note that right-hand shaft must enter two separate sets of splines — one in sleeve and another in gear. When reduction case is entered on dowels, replace and fully tighten stud nuts. Adjust brakes and replace wheels.

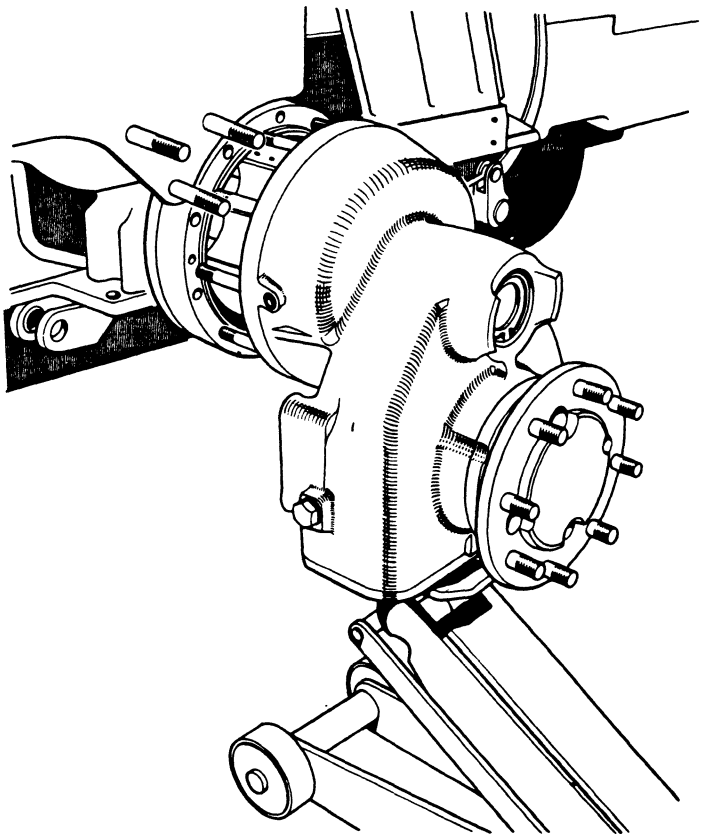

Figure 34.
REMOVING A REDUCTION UNIT

OPERATION K4b

Dismantling and Assembling Reduction Unit: After draining oil from case, remove cover plate and unlock tabwasher on final driveshaft. Using a suitable 'C' spanner (Service Tool 909842) and hammer, unscrew ring nut: this is right-hand thread.

Insert a socket wrench through holes in final driveshaft flange and remove two opposite seal—housing—to—reduction case bolts.

Clean threads in final driveshaft extraction holes by screwing a 1/2 BSF tap through each hole: this is essential to prevent damage to extraction bolt threads. Fit two extraction bolts (Service Tool 900207) through holes in shaft flange and place two thrust blocks between housing and bolt ends. These blocks are necessary to prevent damage to extraction bolts or housing and dimensions of suitable blocks are shown in Figure 36.

Tighten both extractor bolts evenly — spur gear splines are smeared with Loctite on assembly and will, therefore, be initially tight — to draw shaft out of housing and bearing. Do not attempt to withdraw shaft unless the seal housing is bolted to reduction case, otherwise the housing will be distorted and cause the taper roller bearing to grip the shaft very tightly.

After withdrawing shaft, remove spur gear, tabwasher, ring nut and inner bearings from case then remove seal housing and outer bearing.

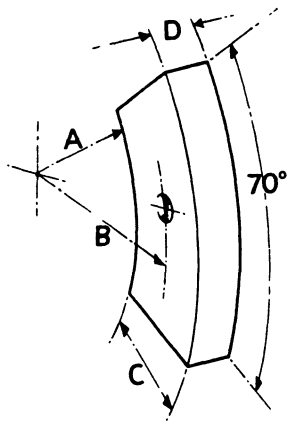

Figure 36.
DIMENSIONS OF THRUST BLOCK

A. $2\frac{9}{16}$ in. (65·1 mm) **B.** 3 in. (76·2 mm)
C. $1\frac{5}{16}$ in. (33·4 mm) **D.** $\frac{9}{16}$ in. (14·3 mm)
Drill $\frac{1}{4}$ in. (6 mm) diameter indentation $\frac{1}{16}$ in. (1·6 mm) deep at position shown

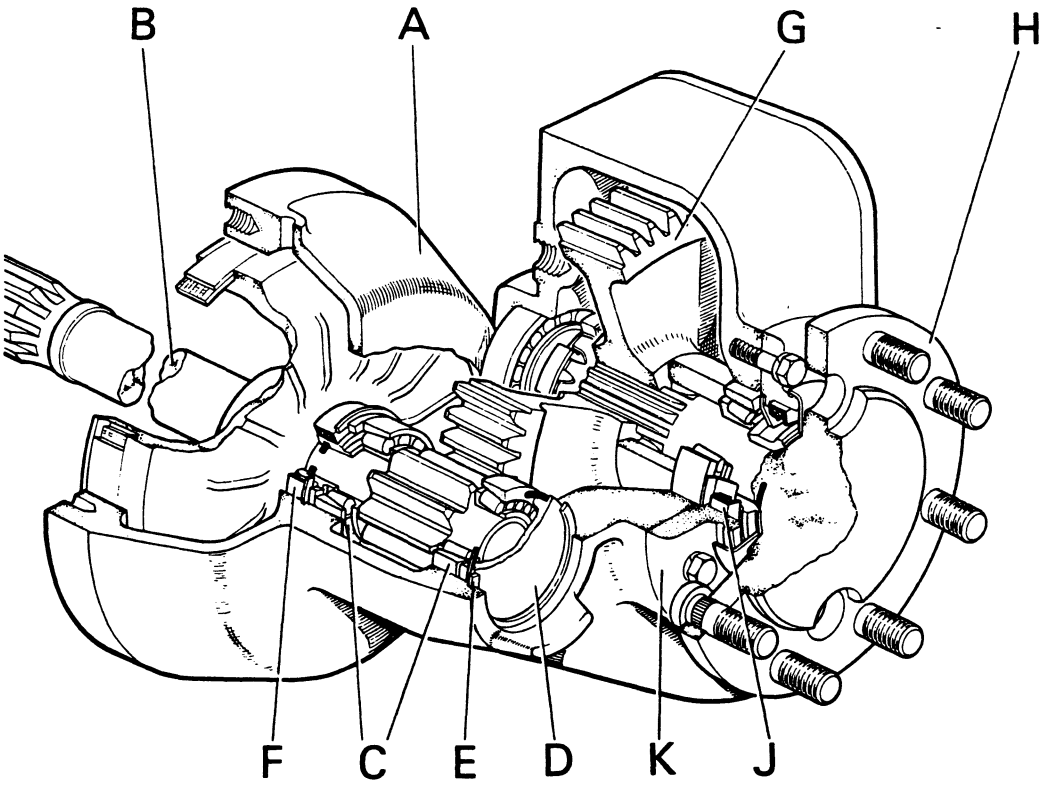

Figure 35. FINAL DRIVE REDUCTION UNIT

A. Case **B.** Spur pinion shaft **C.** Roller bearings
D. Cover **E.** Circlip **F.** Oil seal
G. Spur gear **H.** Final driveshaft **J.** Oil seal
K. Seal housing

Brake Drum Removal: The brake drum is a tight fit on spur pinion shaft and is provided with two 1/2 UNC extraction holes. Do not attempt to remove drum by screwing two extractor bolts through drum and tightening them against reduction case, but use Service Tool 960618, which bolts to drum and has an extraction screw bearing against end of pinion shaft.

To use Service Tool 960618 for withdrawing 1200 brake drums it is necessary to drill two 17/32 in. (13.5 mm) diameter holes at 4 1/8 in. (104.8 mm) centres through the tool flange – holes in other brake drums are at 5 1/4 in. (133.35 mm) centres – and to convert holes in annular spacer into 17/32 in. (13.5mm) wide by 5/16 in. (7.8 mm) deep slots (Fig. 37). Tool can then be bolted rigidly to drum with two 1/2 UNC x 2 1/2 in. bolts (600816) and extractor screw tightened to pull drum off shaft. (Fig. 38).

When removing the 3 1/2 in. (88.9 mm) wide brake drums fitted on later tractors the annular spacer cannot be used and two distance tubes and a collar to the dimensions shown in Figure 37 will be required. Fit collar on shaft then slide extractor on shaft. Bolt extractor flange to drum with two 1/2 UNC x 5 in. bolts (600822), fitting a distance tube on each bolt. Hold extractor, with bar through end, whilst tightening extractor screw and if necessary strike end of screw with a heavy hammer to start drum moving. (Fig. 38).

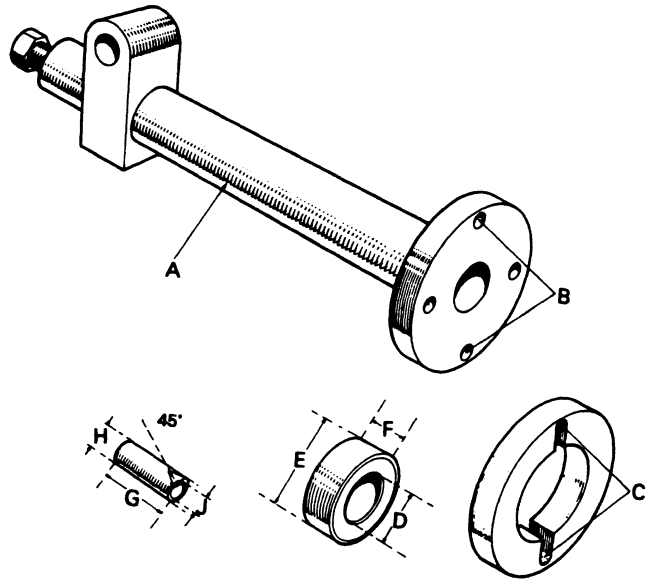

Figure 37.
MODIFICATIONS TO
BRAKE DRUM REMOVER

A. Service tool 960618
B. Additional pair of $\frac{17}{32}$ in. (13·5 mm) dia. holes at $4\frac{1}{8}$ in. (104·8 mm) centres
C. Holes in distance piece converted into $\frac{17}{32}$ in. (13·5 mm) wide by $\frac{5}{16}$ in. (7·9 mm) deep slots
D. $1\frac{7}{8}$ in. (47·6 mm) } Collar
E. $3\frac{1}{4}$ in. (82·5 mm) } Collar
F. $1\frac{3}{4}$ in. (44·5 mm) } Collar
G. $3\frac{1}{2}$ in. (88·9 mm) } Distance tube (two required)
H. $\frac{7}{8}$ in. (22·2 mm) } Distance tube (two required)
J. $\frac{9}{16}$ in. (14·3 mm) } Distance tube (two required)

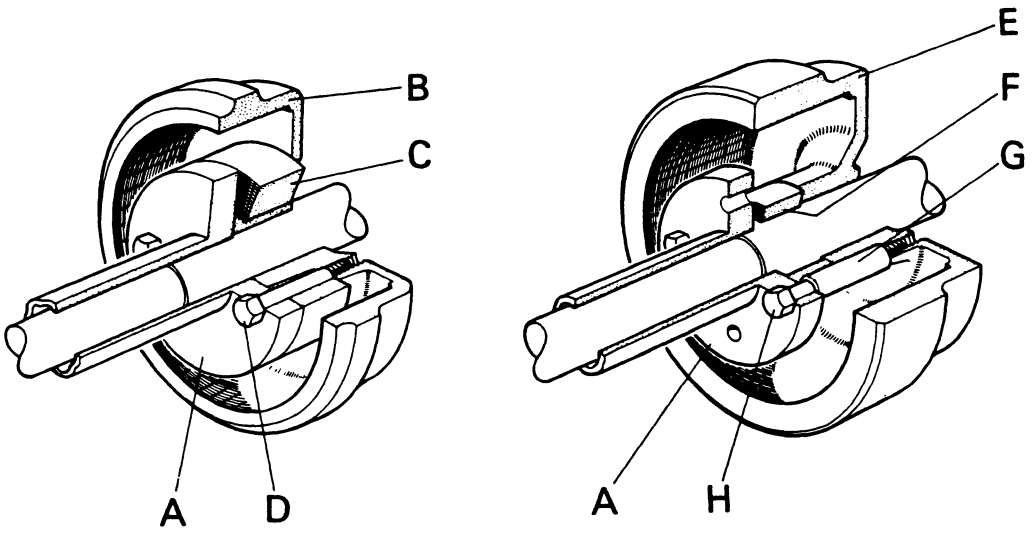

Figure 38. REMOVING BRAKE DRUM

A. Service tool 960618
B. Brake drum $2\frac{1}{2}$ in. (63·5 mm)
C. Distance piece
D. Bolts $\frac{1}{2}$ UNC × $3\frac{1}{2}$ in. (600816)
E. Brake drum $3\frac{1}{2}$ in (88·9 mm)
F. Collar
G. Distance tube
H. Bolt $\frac{1}{2}$ UNC × 5 in. (600822)

Spur Pinion Shaft Removal: After removing brake drum, remove end cover circlip then turn case so that pinion shaft is uppermost and place suitable wooden blocks under case. Ensure blocks will not foul pinion as it is pushed from case then strike end of pinion shaft with a soft-faced hammer or wooden block. When pinion shaft has pushed cover and outer bearing from case, turn case on its side and withdraw pinion shaft.

Spur Pinion Shaft Oil Seal: This should be examined whilst pinion shaft is removed and renewed if leaking or damaged. Lever out old seal then wipe bore clean before pressing new seal into position. Use a flat plate, or large mandrel, so that seal is not distorted, and position seal so that lip is towards circlip.

Oil Seal Collar: The seal collar on pinion shaft must not be worn or damaged, otherwise seal will be unable to prevent oil leakage. To prevent oil leakage between shaft and collar an 'O' ring is fitted inside collar and before fitting a new collar ensure that a new 'O' ring is fitted in collar groove.

Replacing Spur Pinion Shaft: Smear inside of case oil seal with grease then fit pinion shaft, with roller races on shaft, through oil seal. Lay case on bench so that pinion shaft hangs vertically over bench edge then replace outer bearing track in case bore and tap track down until it is pressed firmly against rollers.

Replace original shims on bearing track then replace cover, with 'O' ring in cover groove, and circlip. Rotate shaft, to settle bearings, then press cover firmly down and measure the gap between cover and circlip with a feeler gauge. Remove circlip and fit shims of sufficient thickness to completely fill the gap on outside of cover – this is much easier than removing cover – and replace circlip. As the bearings must have no clearance but up to 0.003 in. (0.08 mm) preload there must be no gap under the circlip.

Replacing Final Driveshaft: Ensure that thrust plate and bearing track are positioned in case bore and adjusting screw is screwed outwards clear of thrust plate.

Clean inside of shaft dirt shield, pack inside of oil seal with grease then fit housing on shaft. Fit grease baffle in housing and push outer track of roller race against baffle. Replace roller race and distance piece on shaft, smear both sides of a new gasket with jointing compound then fit this on housing face. Ensure that both shaft and gear splines are clean and free from oil then apply Locquic primer before smearing splines with Loctite. Place spur gear inside case then fit shaft through case and gear, replacing tabwasher, ring nut and inner bearing on shaft at the same time. Bolt seal housing to case, ensuring that drain slot adjacent to grease nipple will be towards the bottom when unit is refitted on tractor, i.e., grease nipple will be at 7 o'clock position. After screwing ring nut onto shaft, so that it will not prevent shaft fully entering inner bearing, tighten housing bolts evenly to 50 lb ft (6.9 kg metres).

Tighten shaft ring nut: do not use a hammer and punch but use a 'C' spanner (Service Tool 909842) and heavy hammer as the nut must be very tight, otherwise gear may work loose on splines. When ring nut has been fully tightened lock it securely with tabwasher.

Driveshaft Bearing Setting: With shaft ring nut and oil seal housing bolts fully tightened, remove bearing adjuster screw and strike centre of driveshaft flange with a hammer: this will push inner bearing back and give shaft some end-float. Replace adjuster screw without shims and screw this in whilst checking shaft end-float. Continue tightening adjusting screw until shaft end-float disappears and bearings start being preloaded then measure thickness of gap under adjusting screw head with a feeler gauge. Select shims 0.006 in less than the measured thickness of gap then remove bolt and fit shims under bolt head. Fully tighten bolt before locking with wire: shaft bearings should then have 0.005 to 0.007 in (0.13 to 0.18 mm) preload.

Reduction Case Breather: As it is essential that no build up of pressure takes place inside the reduction case one of the cover bolts is drilled to act as a breather. It is therefore important that the breather bolt is not replaced by an undrilled bolt and is not allowed to become blocked. When refitting a cover plate always check that the breather bolt is clear and fitted at the top of the cover

OPERATION K4c

Rear Axle Case Oil Seals: These are fitted in the housings at each end of the axle case and to remove seals it is first necessary to withdraw housing and then remove seals from housing. (Fig. 39).

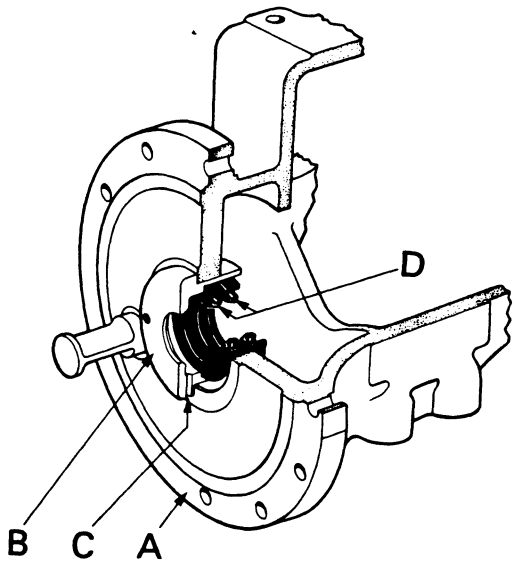

Figure 39.
REAR AXLE CASE OIL SEALS

A. Rear axle case
B. Oil seal housing
C. Drain hole
D. Oil seals

To remove housing from axle case use Service Tool 900208. This consists of a bridge piece and two 1/4 BSF x 2 in. bolts. Attach bridge piece to housing, by screwing the two bolts into housing extraction holes, and fit two extractor screws (900207) through bridge piece. Tighten extractor screws evenly to draw housing out of axle case then remove bridge piece and drive seals out of housing with a hammer and drift. When fitting new seals, first clean inside of housing then press first seal, lip towards centre of axle case, to end of housing bore. Press second seal, also with lip towards centre of axle case, into housing until seal face is level with end of housing.

Before replacing seal housing, pack cavity between seals with high-melting-point grease and smear outside of housing with jointing compound. Wipe axle case. If housing incorporates a drain hole position this towards bottom then tap housing squarely into axle case.

Final Driveshaft Oil Seal: This consists of an external dirt excluder, oil seal and internal baffle. When grease is pumped through the housing grease nipple the baffle prevents grease passing into the reduction case and causes sufficient pressure to be built up to force the grease outwards past the seal and through the dirt excluder. The appearance of grease round the shaft dirt excluder does not therefore indicate that the shaft seal is leaking but shows that the grease is performing its correct function, which is to protect the seal by periodically flushing out dirt which would otherwise eventually damage the seal and bearing. (Fig. 40).

OPERATION K5

Removing and Replacing Final Driveshaft Oil Seal: It is not necessary to remove a reduction unit to replace the oil seal. Remove wheel, drain oil from reduction and remove the case cover.

Unlock the tabwasher on final driveshaft and unscrew ring nut, using a hammer and a suitable 'C' spanner such as Service Tool 909842: nut is right-hand thread. Insert a socket wrench through holes in driveshaft flange and remove two opposite seal-housing bolts. Screw a 1/2 BSF tap through both extraction holes in driveshaft flange: this is essential to prevent damage to extraction bolt threads. Screw two extraction bolts (Service Tool 900207) through holes in shaft flange and place two thrust blocks between housing and bolt ends.

These blocks are necessary to prevent damage to extraction bolts or housing, and dimensions of suitable blocks are shown in Figure 36).

Tighten both extractor bolts evenly — spur gear splines are smeared with Loctite on assembly and will therefore be initially tight — to draw shaft out of housing.

Do not attempt to withdraw shaft unless seal housing is bolted to reduction case, otherwise housing will distort under pressure and cause the tapered roller bearing to grip the shaft very tightly.

After removing shaft, remove spur gear, tabwasher, ring nut and inner bearing from case then remove seal housing.

Remove oil seal from housing and, after cleaning housing, carefully press new seal into position. Do not distort seal when pressing it into housing, and position seal so that lip is towards outside of housing. (Fig. 40).

Oil Seal Collar: The seal collar on shaft must be smooth and undamaged, otherwise the seal will be unable to prevent oil leakage. To remove a worn collar, drive a thin chisel, or screwdriver, down the back of the dirt shield to move collar far enough to get a lever behind it.

Fit a new dirt shield, positioning this in collar recess and fit a new 'O' ring on shaft: this prevents oil by-passing seal and leaking along inside of collar. Press collar firmly against shaft flange so that dirt shield is gripped tight.

Clean inside of dirt shield, pack seal with grease then fit housing on shaft. Replace grease baffle in housing and push outer track of roller bearing against baffle. Replace roller race and distance piece on shaft, smear both sides of a new gasket with jointing compound then fit this on housing face.

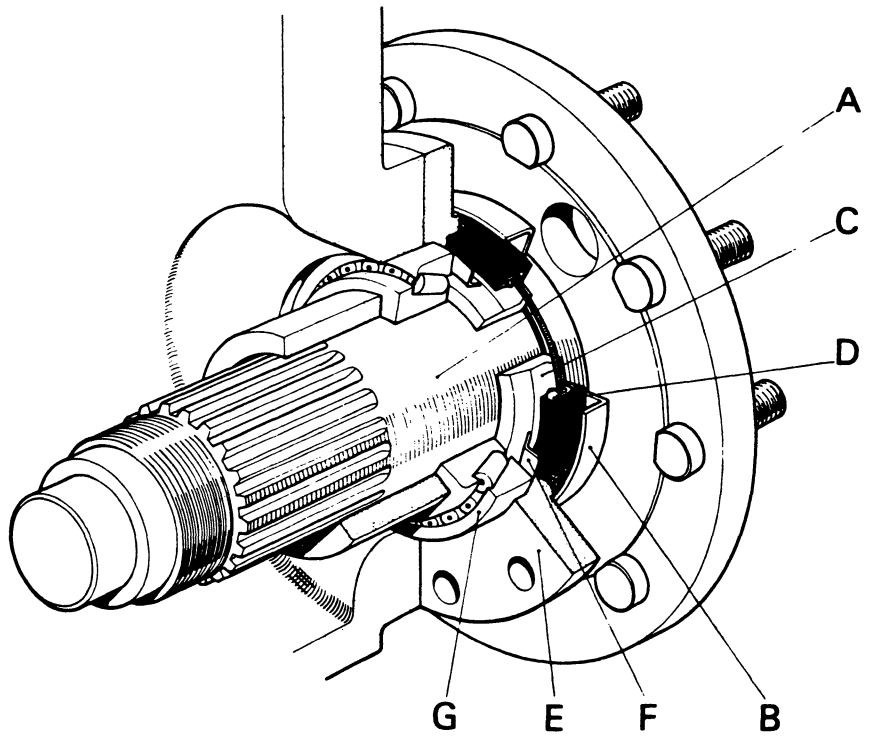

Figure 40. FINAL DRIVESHAFT OIL SEAL

A. Drive shaft **B.** Dirt shield **C.** Shaft collar
D. Oil seal **E.** Housing **F.** Grease baffle
G. Tapered roller bearing

Ensure that both shaft and gear splines are clean and free from oil then apply Locquic primer before smearing splines with Loctite (Grade AV). Place spur gear inside case then fit shaft through case and gear, replacing tabwasher, ring nut and inner bearing on shaft at same time. Bolt seal-housing to case, ensuring that drain slot adjacent to grease nipple is at the bottom, *i.e.*, grease nipple at 7 o'clock position. After screwing ring nut on to shaft, so that it will not prevent shaft fully entering inner bearing, tighten housing bolts to 50 lb ft (6.9 kg metres).

Tighten shaft ring nut. Do not use a hammer and punch, but use a 'C' spanner (Service Tool 909842) and heavy hammer as the nut must be very tight, otherwise gear may work loose on splines.

Driveshaft Bearing Setting: With shaft ring nut and seal housing bolts fully tightened, remove bearing adjuster screw and strike end of driveshaft with a hammer: this will push inner bearing back so that shaft will have end-float. Replace adjuster screw without shims and screw this in whilst checking shaft end-float. Continue tightening adjuster screw until shaft end-float disappears then check thickness of gap under bolt head with a feeler gauge. Select shims 0.006 in. (0.15 mm) less than the measured gap, then remove bolt and fit the shims under bolt head. Replace and fully tighten bolt before locking with wire: shaft bearings will then have 0.005 to 0.007 in. (0.13 to 0.18 mm) preload.

Reduction Case Breather: As it is essential that no build up of pressure takes place inside the reduction unit one of the cover bolts is drilled so that it acts as a breather. It is therefore important that the breather bolt is not replaced by an undrilled bolt and is not allowed to become blocked. When refitting a cover plate, always check that breather bolt is clear and fitted at the top of the cover.

OPERATION K7

Removing and Replacing Differential Lock Pedal: Remove bolts attaching right-hand footplate to main frame and fender, then push footplate down so that it pivots on brake cross shaft and allows rear of plate to clear pedal pivot.

Remove spring pin from pedal pivot then slide pedal sideways. Pivot pin is screwed into main frame and can be removed if required.

Ensure that pivot pin is screwed tightly into frame then smear pin with grease before replacing pedal. Replace spring pin then lift footplate into position and replace bolts.

DIMENSIONAL DATA

Muff coupling end-float	0.008 – 0.040 in (0.20 – 1.02 mm)
Pinion shaft bearing setting	0.002 in (0.05 mm) end-float to 0.002 in (0.05 mm) preload
Layshaft end-float	0.002 – 0.004 in (0.05 – 0.10 mm)
Auxiliary layshaft bearing distance piece end-float between roller bearings	0.010 – 0.050 in (0.25 – 1.27 mm)
Differential side bearing end-float	0.000 – 0.002 in (0.00 – 0.05 mm)
Crown wheel and pinion tooth backlash	0.007 – 0.009 in (0.18 – 0.23 mm)
Gearbox mounting clearance: vertical	0.016 – 0.021 in (0.41 – 0.53 mm)
Gearbox mounting clearance: horizontal	0.008 – 0.012 in (0.20 – 0.30 mm)
Spur pinion shaft bearing pre-load	0.001 – 0.003 in (0.02 – 0.08 mm)
Final driveshaft bearing pre-load	0.005 – 0.007 in (0.13 – 0.18 mm)

TIGHTENING TORQUES

	lb ft	kg m
Reduction case cover bolts	25	3.5
Reduction oil seal housing bolts	50	6.9
Reduction units to rear axle case bolts		
tractor 700001 to 700346	75	10.5
tractor 700347 to 703004	100	13
tractor 703005 onward	75	10.5
Final driveshaft ring nut	150	21
Gear lever housing bolts	9	1.3
Pinion shaft nut	200	28
Differential bearing cap bolts	120	16.5
Spacer stud nuts	70	9.7
Crown wheel bolt nuts	50	6.9
Adjusting nut lock plate bolts	20	2.8
Top shaft bearing retaining bolt	8	1.1
Differential cage cover bolts	30	4.2
Rear wheel hub nuts		
$\frac{5}{8}$in (15.9mm) diameter	114	15.7
$\frac{3}{4}$in (19mm) diameter	140	19.2

SUMMARY OF DESIGN CHANGES

Details of Change	When introduced
Material of reduction units to rear axle case bolts changed so that tightening torque of bolts can be increased from 75 to 100 lb ft (10.5 to 13.8 metres). Part number of bolts changed from 600803 to 600881	1200/700347–703004 (October 1967)
Wheel bolts in final driveshafts increased in length to 2½ in. to allow fitting of power-adjusted rear wheels. Part number of bolts changed from 611266/7 to 611271.	1200/700807 (April 1967)
Profile of detent ball groove in range selector rod (917733) changed from 90 to 60 included angle.	1200/700945 (April 1967)
Width of brake shoes increased from 2½ to 3½ in. (63.5 to 88.9 mm). Adaptor plate fitted between axle case and reduction unit and spur-pinion shafts increased in length	1200/703005 (October 1967)
Oil capacity of transmission increased from 8 to 9 gallons (36.4 to 41.0 litres) by changing dipstick sleeve from 83884 (¾ in.) to 923725 (1¼ in.).	1200/705026 (February 1968)
Oil seal collar (910390) sealed to spur pinion shaft by fitting 'O' ring (15533) in groove on inside of collar.	1200/705386 (February 1968)
Bearings in auxiliary layshaft of 12-speed gearbox changed so that needle rollers run directly against gear and spindle. Part number of layshaft gear changed from 923796 to 924493. The later parts K924493, K620273, K924495 and K626714 should be used.	1200/706767 (October 1968)
Splines in muff coupling changed from six splines with straight sides to 16 splines with involute sides, with corresponding change to splines on clutch and gearbox driveshafts.	1200/708742 (May 1969)
Sealing washers (14582) fitted on gearbox cover to main frame bolts, in place of plain steel washers (15735), used previously.	1200/711300 (December 1969)
Plain bush (621244) in differential pinion changed to shouldered bush (928899). Part number of pinion changed from 910465 to 928900.	1200/15045 (November 1970)
Diameter of differential pin (942038) increased from 1 in. (25.4 mm) to 1⅛ in (28.57 mm). Part number of differential cage changed from 908780 to 942316. New bevel pinions (942317) and circlips (12207) must also be used with the larger diameter pin.	1200/717761 (November 1971)
Auxiliary layshaft bearings of a different length fitted to a number of 1210 tractors. These bearings, which are 1¼ in. (31.75 mm) long and require a 1.425 in. (36.19 mm) spacer, will not be supplied as replacements and must, therefore, be replaced with 620273 bearings and 924495 spacer.	1210/721179 to 721263 (September 1972)
Shimming of gearbox layshaft moved from front end plate to rear end plate and shim qty reduced. When layshaft front shoulder is 3.20 mm (0.125 in.) shim at front. When front shoulder is 3.90 mm (0.153 in.) shim at rear.	1210 (April 1973)
Oil seal added to final drive shaft between outer bearing and spur gear. Seal lip faces spur gear to retain oil in reservoir. Outer bearing now lubricated with grease. Grease nipple in flange now accessible from rear. Pack bearing with grease on assembly and apply 2 shots from grease gun every 60 hours.	1210–721832 (July 1973)
Five internal serrations added to gear lever dirt excluder K929631 to improve retention and seal.	1210–724406 (February 1974)
A circular trough K945133 was used between pinion and rear pinion bearing on some tractors. This should be discarded at overhaul and shims K910454/5/6/7 added behind bearing cup to an approx. additional thickness of 0.90 mm (0.035 in.). Finally set pinion depth with tool DB 8208.	1210 (1973/4)
Diameter of special bolts attaching final drive hub to wheel centre increased in diameter from ⅜ in. to ½ in. and holes in wheel centre increased from 19 to 25.4 mm (0.75 to 1.0 in.). Special wheel nuts K617210 available to fit latest wheel centres to earlier ⅜ in. bolts. Wheel nut brace K946622 and tommy bar K948095 fits ⅜ in. and ½ in. nuts. Final drive ratios standardised at 10/49.	1210–725180 (April 1974)

Method of retention at rear of synchromesh unit changed from circlip to split rings and special recessed washer to provide more positive location.
Prior to this the first gear front hub was temporarily recessed and a wider circlip (and groove) K12300 used in place of K621865.

Split rings 1210–729430 (August 1975)

If the later specification is required in service proceed as follows:
Grind front face of 1st gear hub K942461 across full width to reduce overall length of hub to 40.5 mm (1.$\frac{19}{32}$ in.).
Extend the circlip groove (at rear of synchromesh unit) to the following dimensions:
Distance of front face of groove to front shoulder of shaft (theaded end) 140.77 mm (5.542 in.).
Distance of rear face of groove to front shoulder of shaft (theaded end) 145.57 mm (5.732 in.).
i.e. width of groove 4.80 mm (0.189 in.).
Shaft dia at bottom of groove 45.90 mm (1.807 in.).
Use two split rings K945962 and one recessed washer K948670 to replace circlip K12300 or K621865 and washer K940975.

Wider circlip 1210–723883

Recessed gear 1210–722949

Other David Brown publications on transmissions are available through your DB Dealer or from Publications section, David Brown Tractors Ltd., Meltham, Huddersfield, England HD7 3AR.

Service Repair Manual Section C1 Transmission, Non-synchromesh, not 1200	9–38115
Service Repair Manual, section C2, 4 WD Transmission and Front axle Mk I (Selene)	9–38116
Service Repair Manual, section C3, Transmission Non-synchromesh, not 1210 or 1410	9–37141
● Up-dated pages 19/20	9–38159
Service Repair Manual, section C5, Transmission Hydra-shift	9–37161
● Up-dated pages 25/28a	9–38156
● Up-dated pages 33/34	9–38161
Service Repair Manual, section C6, 4WD Transmission and Front Axle Mk I (Kramer)	9–37171
Service Repair Manual, section C7, 4WD Transmission and Front Axle Mk II	9–37172
1412 tractors—included in the Preliminary Service Information section	9–38121
Instructional drawings, Synchromesh Transmission (with booklet)	9–38501
● Instructional drawing, Synchromesh gearbox	9–38601

HYDRA-SHIFT TRACTOR TRANSMISSION

CASE CORPORATION Pub 9-37161 PRINTED IN U.S.A.

CONTENTS **Page**

INTRODUCTION

Description 2

Operations .. .. 2 – 9

SERVICE TASKS

Transmission Oil Filters 10

GEARBOX REMOVAL AND REPLACEMENT

Completely removing the gearbox 11

Re-assembly 12

Splitting the tractor at the gearbox/axle joint 13

Re-assembly 14

DISMANTLING GEARBOX .. .. 15 – 16

INSPECTION OF PARTS 16

SEQUENCE VALVE SETTING PROCEDURE 18

GEARBOX ASSEMBLY

Range section of gearbox .. .. 18 – 20

Planetary section of gearbox .. .. 20 – 23

Assembly and setting of brake bands .. .. 23 – 24

TRANSMISSION FAULT FINDING 25

Road Testing 26

BAND BRAKE ADJUSTMENT

After removal of gearbox cover 27

Gearbox cover in place (latest tractors) .. .. 27 – 28

FAULT FINDING CHARTS .. .. 29 – 31

DIMENSIONAL DATA 32

Note: This is a completely revised edition, and is updated to August 1973. The majority of this edition was however published in temporary form dated March 1973 and alterations to that temporary edition are of a minor nature only. Editions dated prior to March 1973 are obsolete.

TRANSMISSION – HYDRA-SHIFT TRACTOR

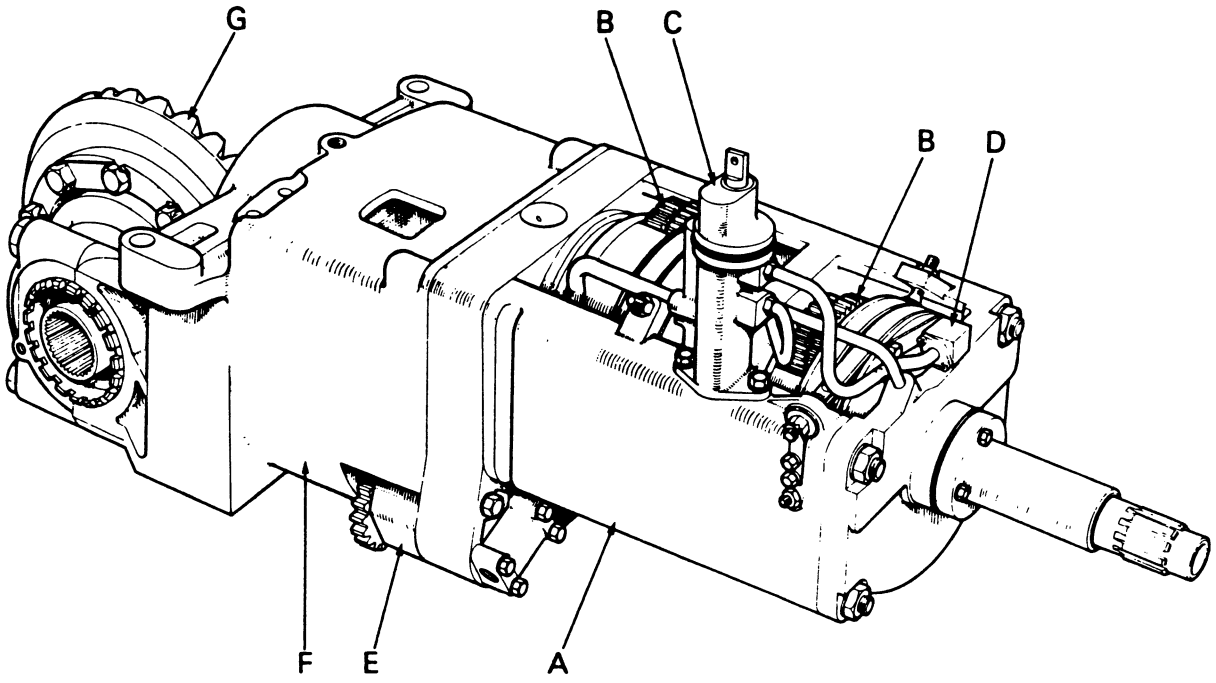

Figure 1 – TRANSMISSION UNIT – HYDRA-SHIFT TRACTOR

A. Four-speed section
B. Planetary gear units
C. Spool valve
D. Sequence timing valve
E. Oil pump
F. Range gear section
G. Differential

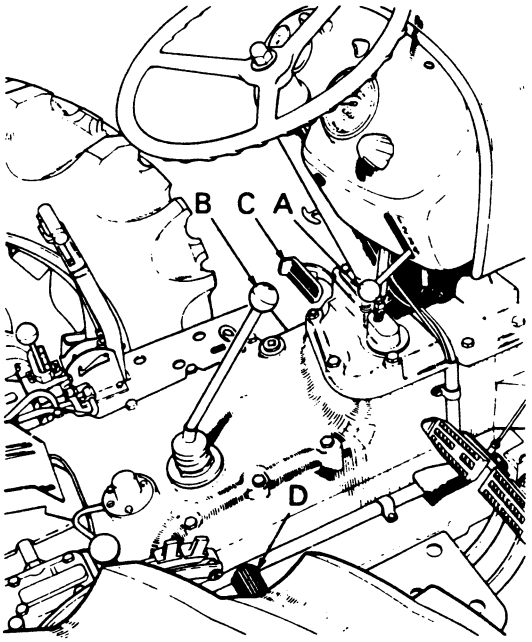

Figure 2 – TRANSMISSION CONTROLS

A. Hydra-Shift lever
B. Range lever
C. Clutch pedal
D. Differential lock pedal

DESCRIPTION

The gearbox has two sections: a semi-automatic planetary four-speed section at the input end followed by a constant mesh range gear section having three forward ranges (1 – creep range, 2 – field range and 3 – road range) and a reverse range. (Fig. 1).

The four-speed section is hydraulically controlled. Changes between any of the four ratios can be made with the tractor in motion, without using the transmission clutch and without interrupting power flow to the wheels, simply by moving the Hydra-Shift lever. (Fig. 2).

The range gears are selected in the conventional way by a range lever used in conjunction with the transmission clutch.

OPERATION

Note: Direction of rotation, i.e. clockwise or anti-clockwise when referred to in this publication should be viewed from the front of the gearbox, i.e. input end towards output end.

The four-speed section consists of two planetary gear units (each having two speeds), a hydraulic pump and control valves. Each planetary gear unit is fitted with a hydraulically operated multi-plate lock-up clutch, a free-wheel mechanism, and a multi-turn band brake with hydraulic release cylinder.

The planetary gear units are of similar construction but of different ratios. When oil pressure is not applied to the unit (Fig. 3), the carrier is held stationary by the combined action of the free-wheel mechanism and the band brake. When the unit is driving under load the carrier tends to turn anti-clockwise and is prevented from doing so by the free-wheel mechanism. If the tractor is in overrun (engine braking) the carrier tends to turn clockwise and is prevented from doing so by the band brake. When the input shaft is rotated the planet pinions rotate on their own spindles and the gear train operates as a simple reduction, driving the output shaft at reduced speed.

When oil pressure is applied (Fig. 4), the multi-plate clutch is engaged and locks the planet carrier to the input shaft. The brake band is released. The input shaft, carrier and output shaft will now rotate as a solid one-piece unit giving direct drive, i.e. without any reduction of input speed.

The planetary gear unit therefore provides a low ratio when oil pressure is not supplied to it and direct drive when oil pressure is applied to the clutch and brake cylinders. Because the change in output speed is obtained by engaging or disengaging a friction clutch, this can be carried out when the tractor is moving and the gearbox is under load.

Because a single unit gives only two speeds, the four speeds are obtained by using two units, of different ratios, in series, i.e., one driving the other.

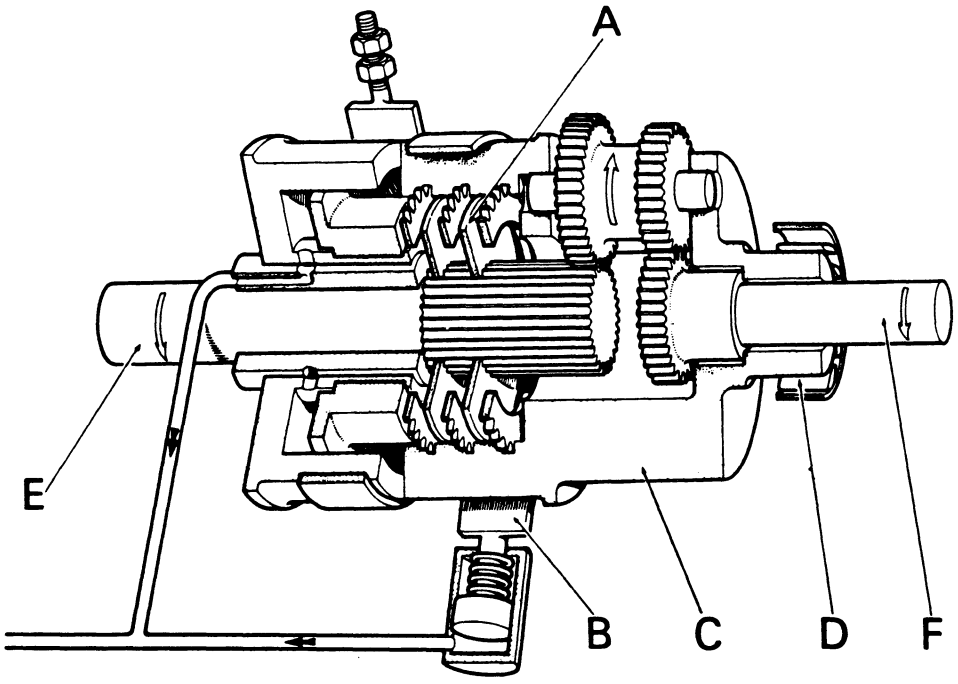

Figure 3 – DIAGRAM OF PLANETARY UNIT IN REDUCTION

A. Lock-up clutch: disengaged
B. Band brake: applied by spring
C. Carrier: stationary
D. Free-wheel mechanism locked
E. Input shaft
F. Output shaft

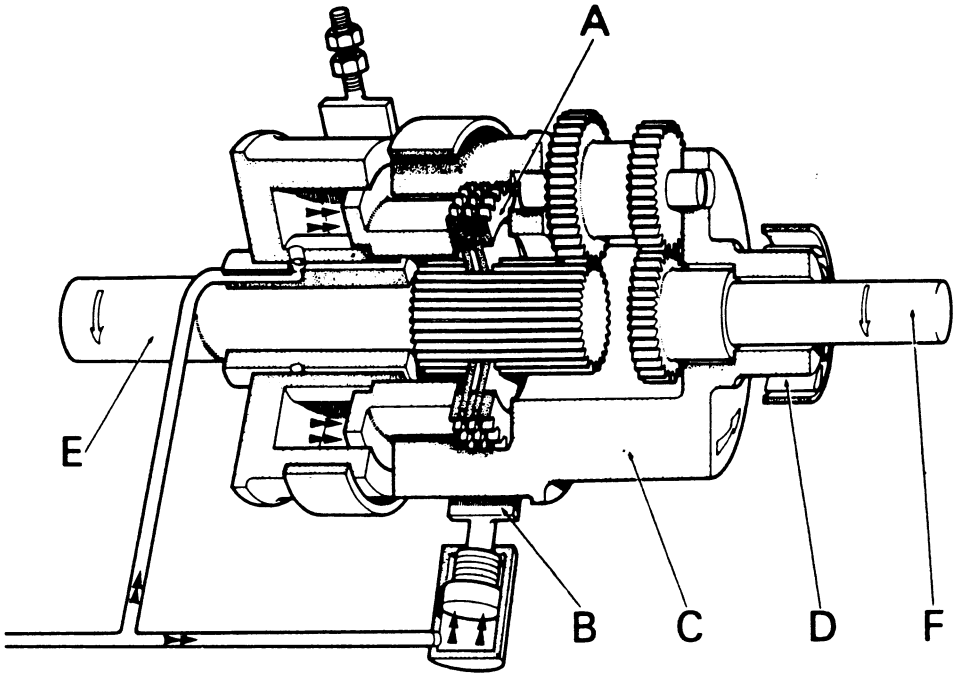

Figure 4 – DIAGRAM OF PLANETARY UNIT IN DIRECT DRIVE

A. Lock-up clutch : engaged
B. Band brake : released
C. Carrier : revolving
D. Free-wheel mechanism : disengaged
E. Input shaft
F. Output shaft

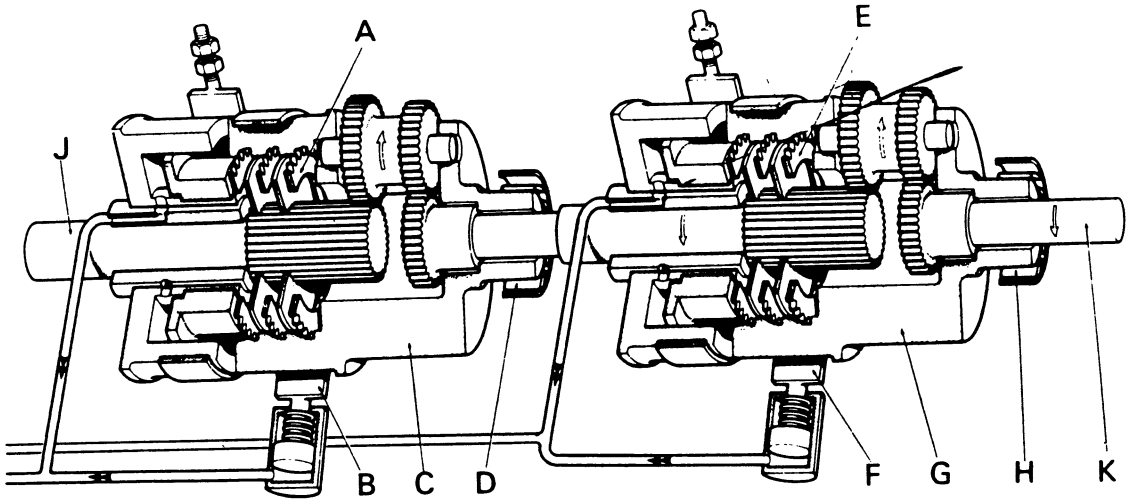

Figure 5 – DIAGRAM OF PLANETARY UNITS IN FIRST GEAR

Front unit in reduction – Rear unit in reduction

A. Lock-up clutch : disengaged
B. Band brake : applied by spring
C. Carrier : stationary
D. Free-wheel mechanism : locked
J. Input shaft
E. Lock-up clutch : disengaged
F. Band brake : applied by spring
G. Carrier : stationary
H. Free-wheel mechanism : locked
K. Output shaft

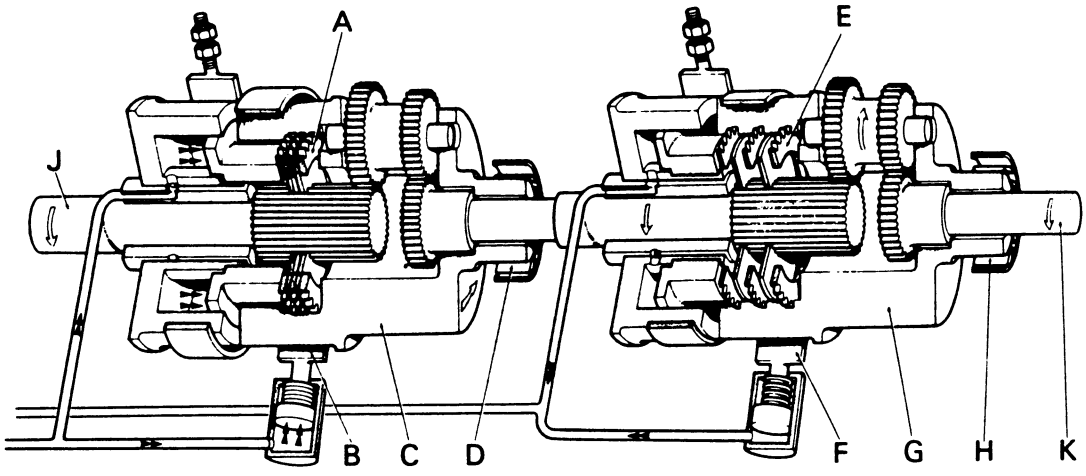

Figure 6 – DIAGRAM OF PLANETARY UNITS IN SECOND GEAR

Front unit in direct drive – Rear unit in reduction

A. Lock-up clutch : engaged
B. Band brake : released
C. Carrier : revolving
D. Free-wheel mechanism : released
J. Input shaft
E. Lock-up clutch : disengaged
F. Band brake : applied by spring
G. Carrier : stationary
H. Free-wheel mechanism : locked
K. Output shaft

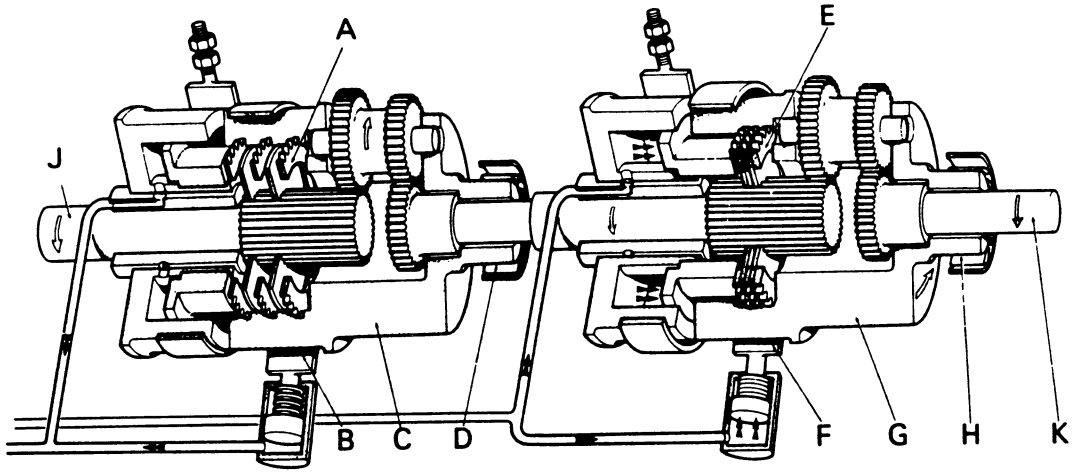

Figure 7 – DIAGRAM OF PLANETARY UNITS IN THIRD GEAR

Front unit in reduction – Rear unit in direct drive

A. Lock-up clutch : disengaged
B. Band brake : applied by spring
C. Carrier : stationary
D. Free-wheel mechanism : locked
J. Input shaft
E. Lock-up clutch : engaged
F. Band brake : released
G. Carrier : revolving
H. Free-wheel mechanism : disengaged
K. Output shaft

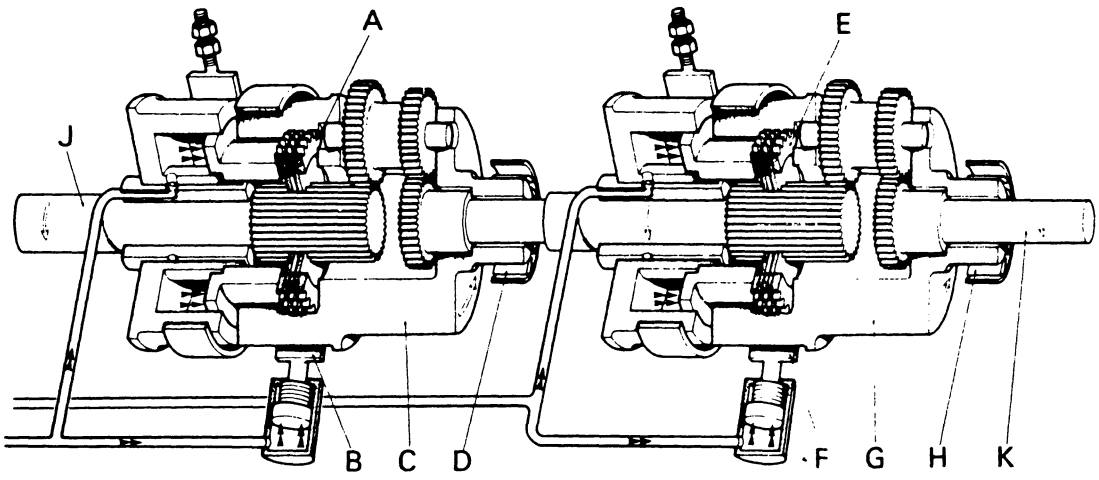

Figure 8 – DIAGRAM OF PLANETARY UNITS IN FOURTH GEAR

Front unit in direct drive – Rear unit in direct drive

A. Lock-up clutch: engaged
B. Band brake: released
C. Carrier: revolving
D. Free-wheel mechanism: disengaged
J. Input shaft
E. Lock-up clutch: engaged
F Band brake: released
G. Carrier: revolving
H. Free-wheel mechanism: disengaged
K. Output shaft

The front unit has a 1·37:1 reduction ratio and the rear a reduction ratio of 1·82:1. Thus, when the input shaft of the front unit is driven and oil pressure is not supplied to either unit, the output shaft of rear unit is driven through a overall reduction ratio of 1·37 × 1·82 = 2·49:1, which is first gear (Fig. 5). When oil pressure is supplied to the front unit only this is in direct drive and the rear unit remains in reduction, thus giving an overall ratio of 1 × 1·82 = 1·82:1 for second gear. (Fig. 6). If oil pressure is supplied to the rear unit only, the front unit is in reduction with the rear unit in direct drive giving an overall ratio of 1·37 × 1 = 1·37:1 for third gear (Fig. 7). With oil pressure applied to both units, both are in direct drive and the output shaft rotates at engine speed: fourth gear (Fig. 8).

It is clear that gear changing within this four-speed section is simply a matter of controlling the supply of oil to the units. The gear selection mechanism is therefore a hydraulic system, comprising a low pressure oil pump, relief valve, a four-position spool valve, sequence timing valves and clutch and brake cylinders (Fig. 9).

The oil pump draws oil from the transmission case and delivers it to the spool valve mounted on top of the gearbox. The top of the valve spool projects through the gearbox cover and is connected to the Hydra-Shift lever mounted on the instrument panel. Moving the Hydra-Shift lever therefore moves the spools and controls the supply of oil through pipes to the appropriate clutch and brake cylinders.

The clutch cylinders rotate, because they are part of the planet carriers and the pressure oil feed is therefore connected through a rotating oil muff at the front of each unit. Oil is prevented from leaking at the rotating joint by piston ring type seals (Fig. 10).

To ensure correctly timed operation of the clutch and brake cylinders, a sequence timing valve is fitted in each clutch feed pipe. This ensures that:

(a) When changing up the brake is released before the clutch is engaged.

(b) When changing down the clutch is released before the brake is applied.

(c) Working together they ensure that the clutch which is being engaged has taken up its plate clearances before the other clutch is released. The valve is a simple spring-loaded piston valve with a control orifice in the piston head (Fig. 11 – 14).

When the spool valve directs oil to a particular planetary unit, the sequence valve prevents oil flow to the clutch until sufficient pressure has been built up in the brake cylinder to support the load of the brake spring, thereby releasing the band brake. The pressure is then sufficient to push the sequence valve against its spring and oil passes via the muff to the clutch cylinder and commences moving the clutch piston. This takes place almost instantaneously At approximately half the clutch piston travel, the buffer springs projecting from the clutch piston face commence the clutch clamping action. The additional pressure necessary to push the clutch piston against the push-off springs and buffer springs simultaneously pushes the brake piston further against the brake spring (Fig. 11 – 14).

When a unit changes from direct drive into

reduction the spool valve cuts off the flow of oil to the clutch and brake cylinders of the unit. The oil in the brake cylinder starts to bleed off through the control orifice in the sequence valve piston. Restrictors at the spool valve end of the brake cylinder pipes regulate the oil flow from the brake cylinders. As the brake cylinder empties so the reducing load of the expanding brake spring results in a lower pressure at the sequence valve. The sequence valve closes slowly under pressure from its spring, as the oil pressure falls. During this time the pressure in the clutch cylinder has been falling gradually because of the permitted leakage, but has been adequate to maintain the drive.

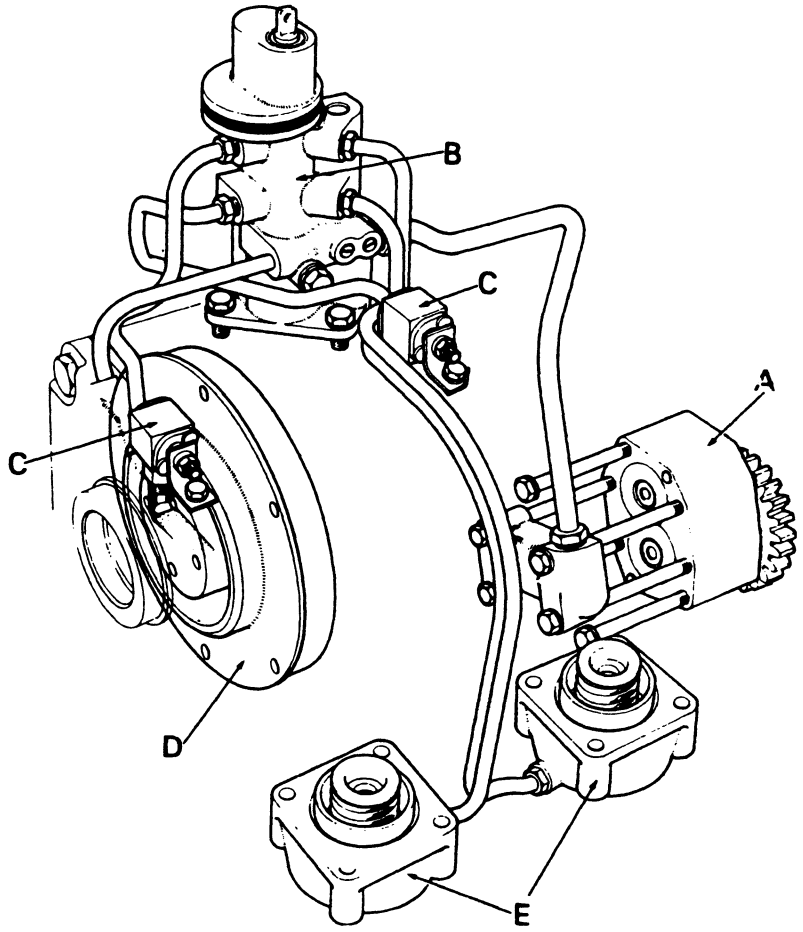

Figure 9 – COMPONENTS OF HYDRAULIC SYSTEM

A. Low pressure oil pump
B. Four-position spool valve with integral relief valve
C. Sequence timing valves
D. Clutch cylinder (the rear clutch cylinder is not shown)
E. Brake cylinders

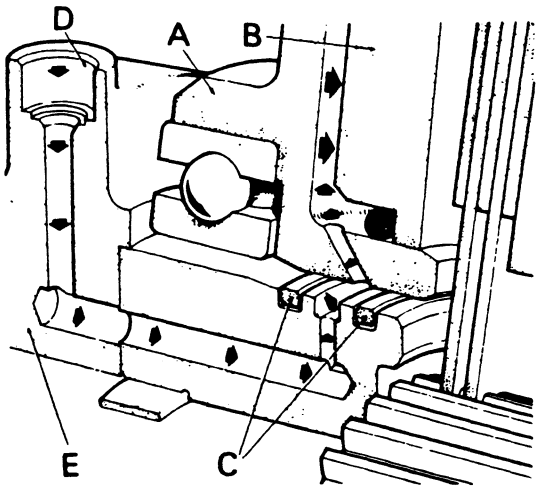

Figure 10 – CLUTCH CYLINDER OIL SEALS

A. Planet carrier
B. Clutch piston
C. Sealing rings
D. Oil connection
E. Casing web

When the brake piston reaches approximately half stroke (at which time the clutch in the other unit will be commencing to engage) the lower pressure at the sequence valve allows the sequence valve to move far enough in order to release the clutch cylinder oil through the sequence valve piston but without its having to flow through the control orifice. Thus releasing the clutch. The brake cylinder meanwhile continues to empty via the sequence valve orifice and when the brake piston has completed its travel the full brake spring load is applied to the brake band (Fig. 14).

When the tractor is pulling a load and the clutch is disengaged, the carrier is prevented by the free-wheel mechanism from rotating in the reverse direction which otherwise it would do because of the output torque. When changing down a gear under load the unit therefore reverts automatically to the reduction ratio before the band brake is applied. In overrun (engine braking), the output torque is of course reversed but the band brake prevents the tractor free-wheeling under these conditions.

The relief pressure valve is incorporated in the control valve body and maintains a nominal pressure of 70 lb/in^2 (5 kg/cm^2) in the system. Oil released by this valve is fed through pipes to centre of each planetary unit to lubricate the units and cool the clutch plates.

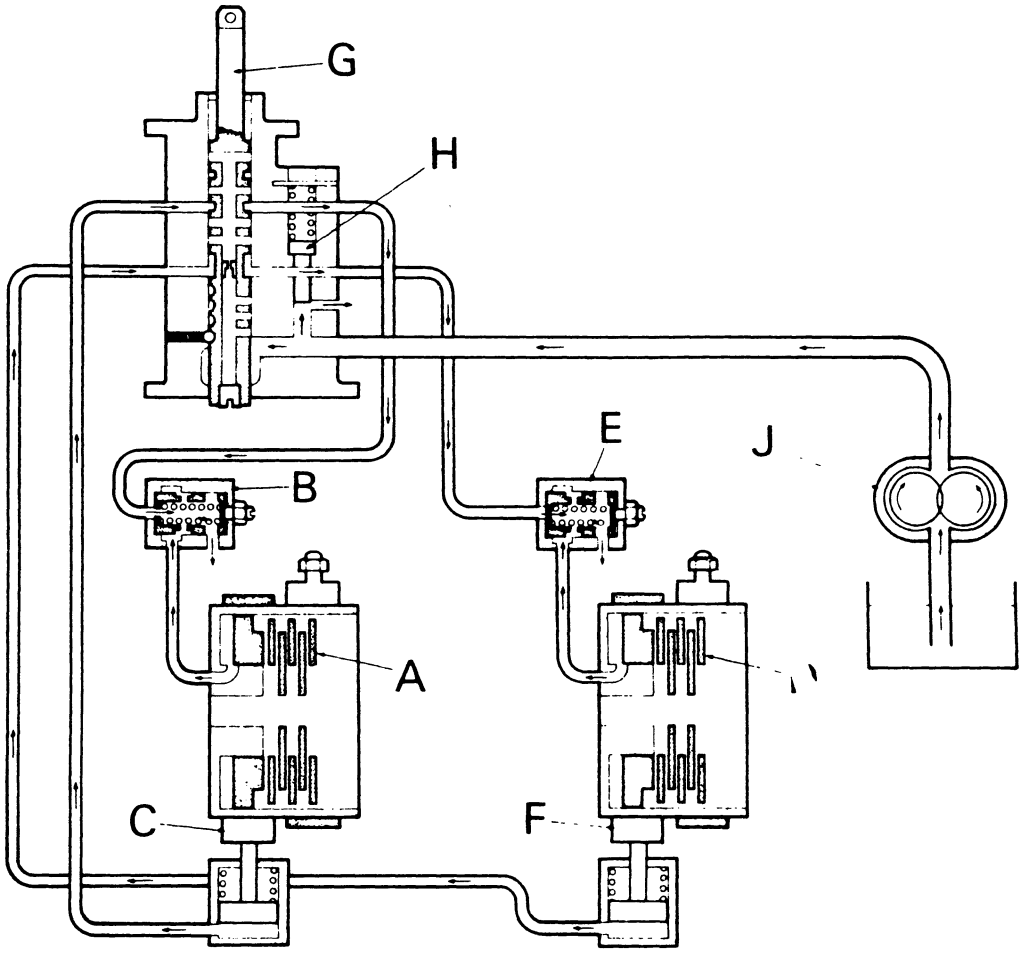

Figure 11 – DIAGRAM OF HYDRAULIC SYSTEM IN FIRST GEAR

A. Clutch : disengaged } Front
B. Sequence valve : open } Planetary
C. Band brake : applied } Unit
D. Clutch : disengaged } Rear
E. Sequence valve : open } Planetary
F. Band brake : applied } Unit
G. Spool valve
H. Relief valve
J. Oil pump

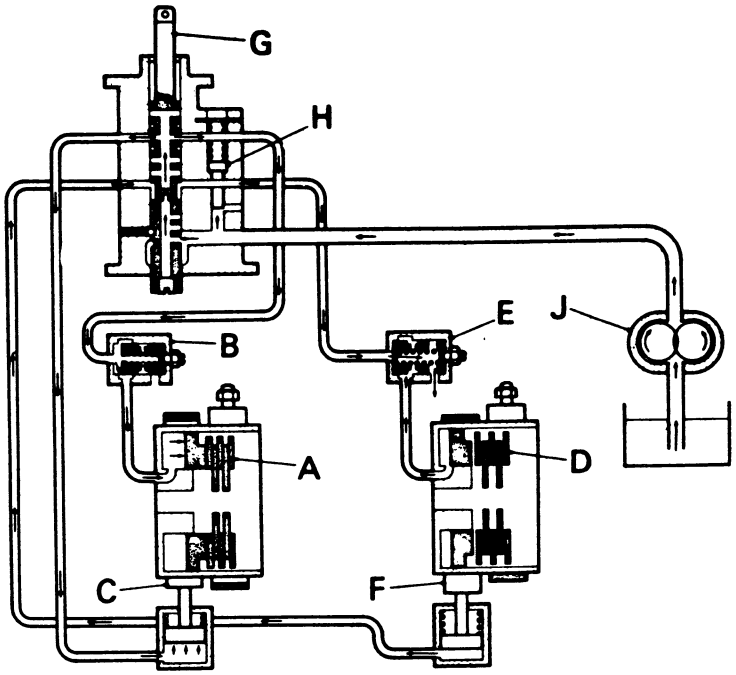

Figure 12 – DIAGRAM OF HYDRAULIC SYSTEM IN SECOND GEAR

A.	Clutch: engaged	Front Planetary Unit	D.	Clutch: disengaged	Rear Planetary Unit
B.	Sequence valve: closed		E.	Sequence valve: open	
C.	Band brake: released		F.	Band brake: applied	
G.	Spool valve				
H.	Relief valve				
J.	Oil pump				

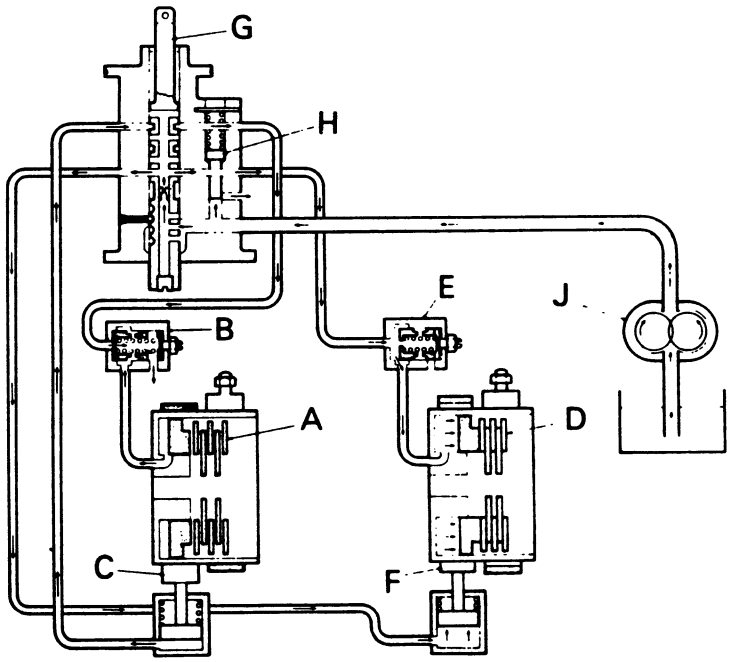

Figure 13 – DIAGRAM OF HYDRAULIC SYSTEM IN THIRD GEAR

A.	Clutch: released	Front Planetary Unit	D.	Clutch: engaged	Rear Planetary Unit
B.	Sequence valve: open		E.	Sequence valve: closed	
C.	Band brake: applied		F.	Band brake: released	
G.	Spool valve				
H.	Relief valve				
J.	Oil pump				

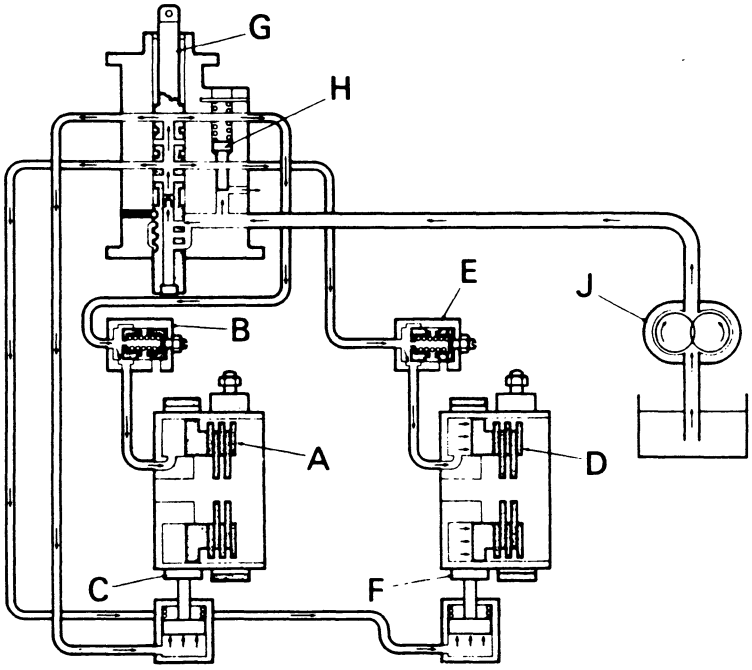

Figure 14 – DIAGRAM OF HYDRAULIC SYSTEM IN FOURTH GEAR

A. Clutch : engaged } Front
B. Sequence valve : closed } Planetary
C. Band brake : released } Unit
D. Clutch : engaged } Rear
E. Sequence valve : closed } Planetary
F. Band brake : released } Unit
G. Spool valve
H. Relief valve
J. Oil pump

SERVICE TASKS

Oil Filter

The gauze filter protecting the hydraulic system of the transmission of the Hydra-Shift tractor must be cleaned after the first 100 hours and subsequently every 500 hours. This is conveniently at the same frequency as for the Selectamatic system's full-flow filter element. It must be noted however that if at any time the full-flow filter yellow warning light fails to extinguish at 1800 rev/min after the oil has been allowed to warm up for 30 minutes the full-flow filter element must be renewed even though it may not have completed its 500 hours of service. At the same time the transmission filter should also be removed and washed in clean fuel etc.

To service these filters it is necessary to drain the oil from plug 'C', Fig. 16. To completely drain the rear axle case the plug in the bottom of the rear axle case must be removed.

After draining the oil, remove the large hexagonal plug 'B' which has the transmission pump inlet pipe and filter attached. Wash the filter in clean fuel and then dry with an air blast or by shaking vigorously.

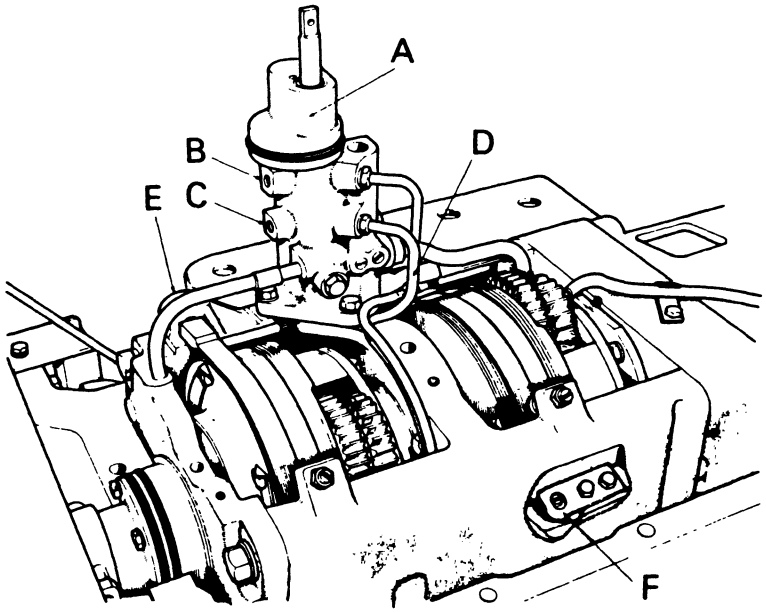

Figure 15 – GEARBOX WITH COVER REMOVED

A. Spool valve
B. Front clutch pipe connection
C. Rear clutch pipe connection
D. Pipes to brake cylinders
E. Front brake band adjuster
F. Rear brake band adjuster

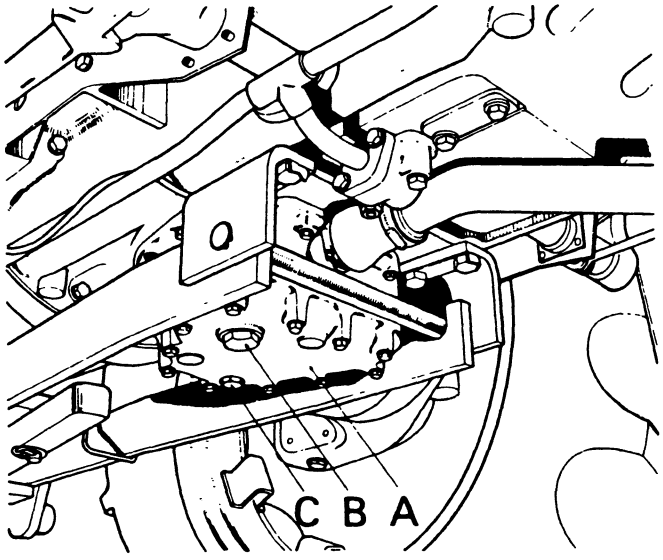

Figure 16 – OIL PUMP FILTER

A. Selectamatic system full-flow filter housing
B. Transmission filter
C. Drainplug

REMOVING AND REPLACING THE GEARBOX

As there is no muff coupling between the gearbox and clutch – the driveshaft is integral with the gearbox – the gearbox cannot be lifted out of the frame without first splitting the tractor.

To completely remove or service the range section of the gearbox it is necessary to remove both reduction units and then withdraw the rear axle case so that the gearbox can be slid rearwards out of the frame. See Method 1.

To remove or service the four speed section of the gearbox it is only necessary to split the tractor at the gearbox/axle case joint and then wheel the axle case away complete with the gearbox. See Method 2.

Method 1 – Completely remove the gearbox

Thoroughly clean the outside of the clutch housing, gearbox top, main frame and rear axle. This is essential otherwise dirt will enter the main frame and may affect the hydraulic system after re-assembly. When the tractor is clean move the tractor on to a piece of clean, firm and level ground.

Drain transmission oil into clean containers, approximate capacity 9 gallons (40 litres).

Remove cover from oil filter housing on underside of rear main frame and extract gearbox oil filter.

Disconnect battery cable and remove starter motor.

Raise rear end of tractor, remove rear wheels and lower tractor on to suitable supports placed under rear-end of main frame: support main frame at each side so that it is held firm and drive a wooden wedge between front axle and each side of the front frame.

Remove both reduction units, disengage and remove diff-lock spring and sleeve.

Remove the silencer and bonnet, disconnect gear lever linkage from the spool valve. Remove the fuel tank and instrument panel complete.

Disconnect the steering pipes from the Orbitrol unit and seal all open pipe ends. Remove steering column complete with wheel, and orbitrol unit. Push the spool valve into the last indent position to prevent the valve from being damaged.

Remove clutch housing and gearbox cover. Remove PTO unit and withdraw cardan shaft out of the gearbox.

Remove high pressure hydraulic pipe. Support weight of rear axle case with crane or jack, then remove bolts attaching case to main frame; push axle case off dowels and then remove axle assembly clear of tractor.

Remove the two gearbox mounting bolts and attach lifting brackets shown in Fig. 17. Using a crane to support, *but not lift* the gearbox, withdraw gearbox rearwards until it is clear of clutch.

Method 1 – Assembly of Tractor

Before replacing gearbox, clean out main frame and ensure that transmission clutch release bearing sleeve is correctly engaged in fork. (Fig. 18). Slide gearbox into position, ensuring that clutch bearing sleeve slides on support snout and taking care not to damage the 'O' rings on front end of gearbox.

As it is unlikely that the clutch plate splines will be in line with shaft splines it is advisable to engage high range and turn the crown wheel when pushing gearbox into position or simply turn any of the planetary pinions.

Fit mounting bushes in rear end-plate; centralise end-plate over bolt-holes so that bushes drop into frame counterbores. Fit and tighten bolts. Torque figures shown on page 32.

Replace PTO cardan shaft, taking care not to damage oil seal inside gearbox shaft.

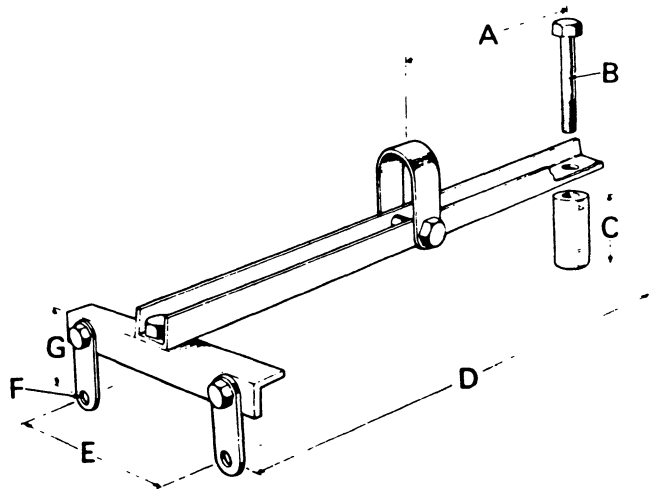

Figure 17 – LIFTING BRACKET

A. 8 in. (203 mm)
B. Bolt, $\frac{1}{2}$ UNC × 4$\frac{1}{4}$ in.
C. 24$\frac{1}{2}$ in. (621 mm)
E. 9 in. (229 mm)
F. $\frac{9}{16}$ in. (14·5 mm) diameter
G. 3$\frac{1}{4}$ in. (83 mm)

Fit new full-flow element in Selectamatic system. Wash both filter screens, re-assemble filter and replace cover plate.

Clean main frame and rear axle faces, removing all traces of old gaskets. Smear axle face with jointing compound, fit new gasket, then bring axle assembly into position. Engage dowels, replace and fully tighten bolts. Refit cardan shaft and replace PTO unit.

Using Service Tool 900207/8, remove oil seal housing from right-hand side of rear axle case.

Replace diff-lock spring in differential end plate. Place sleeve on tool, shouldered end of sleeve towards handle end of tool, and insert tool into axle case. Push tool inwards until sleeve shoulder is behind inner web of casting. When placing sleeve in this position ensure that protruding end of tool is not entered in the spring or the sleeve will be tilted and make subsequent engagement of pedal fork difficult. Manipulate the pedal fork until it is in line with sleeve groove then turn tool to move sleeve sideways and engage fork in sleeve groove. At the same time the protruding end of tool will automatically locate in the spring and act as a guide to aligh sleeve end plate with end plate splines. Push tool towards differential and manipulate it until splines on sleeve engage in end plate splines then wire diff-lock down to hold the sleeve in the engaged position and allow tool to be withdrawn without the sleeve becoming displaced. (Fig. 19).

Replace oil seal housing. Check that seals are in good condition then replace both reduction units.

Fit new gaskets on main frame and replace gearbox cover. If the gearbox cover is not the latest type, it will not have a hole for checking pump pressure of the planetary units or suitable holes for adjusting the brake bands. A hole can be drilled to the measurements in Fig. 21 to enable the pump pressure to be checked. Replace all bolts and lightly tighten bolts into the main frame. Fully tighten bolts through axle case, then finally tighten gearbox cover to main frame bolts. Torque figures on page 32. Replace clutch housing and refit wedge between housing and gearbox cover. Fit shims with wedge so that the wedge is tight and needs to be hammered into place, then replace and fully tighten bolts through wedge.

Fit the high pressure hydraulic pipe.

Refill transmission with oil. If original oil is re-used pour it through a funnel with a fine gauge strainer but discard the last gallon, which will have accumulated any sediment.

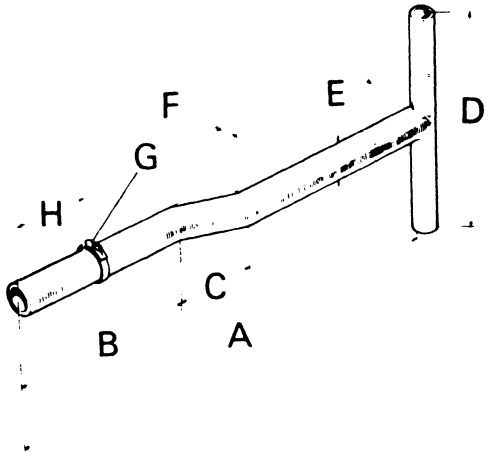

Figure 19 – TOOL FOR REPLACING DIFFERENTIAL LOCK SLEEVE

A. 24 in. (60 96 mm)
B. 4 in. (101·6 mm)
C. 4 in. (101·6 mm)
D. 12 in. (304·8 mm)
E. 1½ in (38·1 mm)
F. 1 in (25·4 mm)
G. Hose clip
H. 4... in. (103 2 mm)

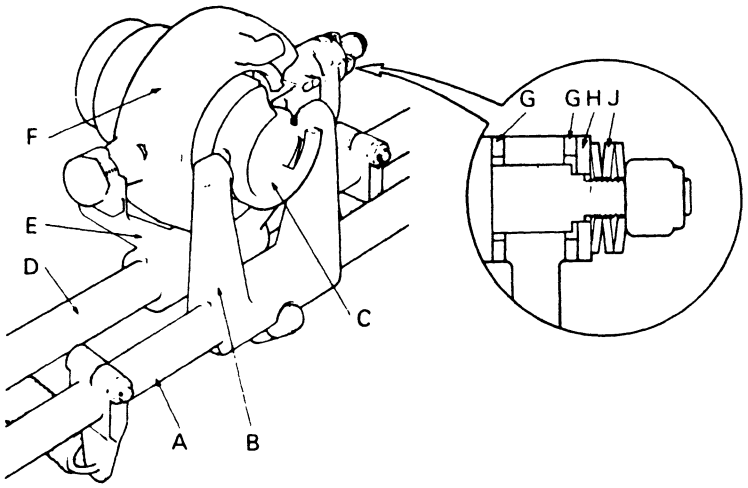

Figure 18 – CLUTCH RELEASE MECHANISM

A. Cross shaft
B. Fork
C. Sleeve
} Transmission clutch
G. Friction washers
H. Special washer
J. Belleville washers
D. Cross shaft
E. Fork
F. Bearing carrier
} PTO clutch

Refit Orbitrol steering unit and steering column. Reconnect pipes and fill system with new oil. Start engine and vent steering system, then top up oil reservoir with oil.

Replace seat, mudguards and drawbar frame. Refit wheels and lower tractor to ground.

Method 2 – Splitting tractor at the gearbox axle joint.

Clean the outside of the clutch housing, gearbox mainframe, rear axle and PTO housing. When the tractor is clean and this is essential otherwise dirt will enter the main frame and may affect the hydraulic system after re-assembly move the tractor to a piece of clean level ground. Drain the transmission oil into clean containers, approximate capacity 9 gallons (41 litres). Drain the oil from both the transmission sump plug and the axle case sump plug.

Disconnect the battery and remove starter motor.

Remove the drawbar frame, seat and bolts which secure the bottom edges of the fenders to the footplates.

Remove the silencer and bonnet, disconnect the gearlever linkage from the spool valve.

Remove the fuel tank and instrument panel complete. Push the spool valve into the lowest indent position to prevent it being damaged when removing the steering column.

Disconnect the steering pipes from the Orbitrol unit and then seal the open pipe ends. Remove the steering column complete with wheel and Orbitrol unit and support casting.

Remove clutch cover, gearbox cover and PTO housing. Remove the cardan shaft.

Remove the high pressure pipe.

Remove the spring pin from the hand brake operating lever.

Support the front half of the tractor using the splitting supports (see tool leaflet D9) these should be bolted to the main frame.

Remove two gearbox locating bolts and ring dowels.

Support the rear half of the tractor with the gearbox to rear axle locating jig (Fig. 20). This jig prevents the axle case from tilting forwards on the reduction spur pinion shafts. Bolt the jig to the rear axle case with a rear axle case bolt. Use two jacking bolts $\frac{3}{8}$ UNC 2 in. (50·4 mm) long screwed into the nuts welded underneath the plate and tightened onto the rear gearbox mounting lugs. Screw a lifting ring into the threaded hole in the transmission. A gantry or overhead track fitted with a pully arrangement should be used to support but not lift the rear half of the tractor.

Remove the rear axle to gearbox bolts.

Wheel either the front half or the rear half of the tractor away.

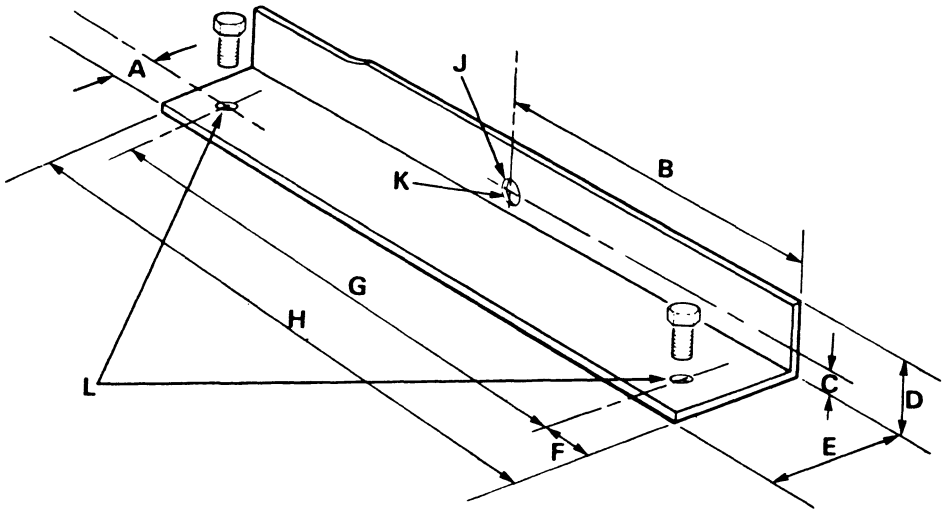

Figure 20 – GEARBOX TO REAR AXLE LOCATING JIG

A. 1 in. (25·4 mm)
B. $7\frac{7}{8}$ in. (200 mm)
C. $\frac{3}{8}$ in. (5·8 mm)
D. 2 in. (50 mm)
E. 3 in. (75 mm)
F. $1\frac{1}{2}$ in. (38 mm)
G. $12\frac{3}{4}$ in. (324 mm)
H. $15\frac{3}{4}$ in. (400 mm)
J. Drill $\frac{1}{2}$ in. (12·7 mm) dia.
K. To rear axle case
L. Drill $\frac{3}{8}$ in. (15·8 mm) dia. weld $\frac{3}{8}$ in. nuts underneath plate to align with holes.

Method 2 – Assembly of the tractor

Before assembling clean out the mainframe, and remove all traces of the old gaskets on the gearbox top, rear axle and steering column. New gaskets must be used on assembly. Ensure that the transmission clutch release bearing sleeve is correctly engaged in fork. (Fig. 18).

Wheel the two halves of the tractor together ensuring that the bearing sleeve slides onto the support snout. Take care not to damage the 'O' rings on the snout.

As it is unlikely that the clutch plate splines will be in line with shaft splines it is advisable to engage high range and turn the crown wheel when pushing the gearbox into position or simply turn any of the planetary pinions.

Replace the bolts between the rear axle case and rear main frame. See page 32 for torque figures.

Align the gearbox mounting holes and then replace ring dowels and securing bolts. See page 32 for torque figures.

Remove tractor splitting supports.

Fit a new full-flow filter element. Wash the hydraulic pump gauze filter. Replace the transmission sump cover.

Replace the high pressure pipe and the spring pin to the hand brake operating lever.

Replace cardan shaft and PTO case.

Refill the transmission with oil.

Replace the fuel tank/instrument panel.

Replace steering support casting, Orbitrol unit, steering column and gearbox top. If the gearbox cover is not the latest type, it will not have a hole for checking pump pressure of the planetary units or suitable holes for adjusting the brake bands. A hole can be drilled to the measurements in Fig. 21 to enable pump pressure to be checked.

Replace the seat, drawbar, bonnet, silencer and the bolts which secure the fenders to the foot plates.

Refit starter and connect battery.

Refit Orbitrol steering unit and steering column.

Reconnect pipes and fill system with new oil. Start engine and vent steering system, then top up oil reservoir with oil.

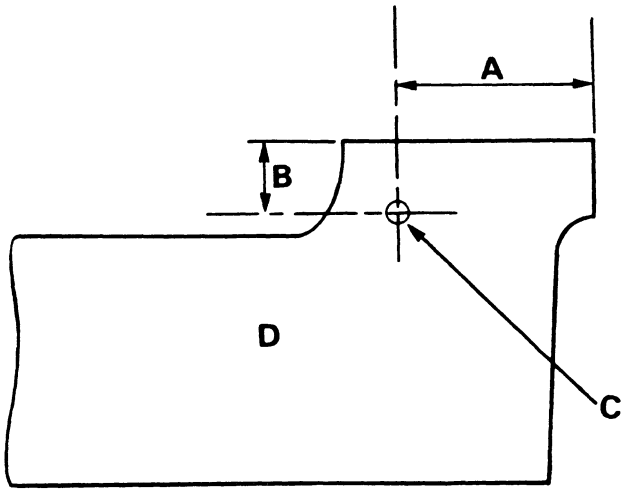

Figure 21 – SIDE VIEW OF TRANSMISSION COVER

A. 11 1/16 in. (280 mm)
B. 2 5/16 in. (58 mm)
C. Drill for a minimum 3/4 in. plug.
D. Transmission cover right-hand side

DISMANTLING GEARBOX –
after using method 1.

As the gearbox is very heavy and cumbersome, a suitable stand is desirable to support the gearbox during dismantling and re-assembly. (Fig. 22). With gearbox attached to stand by two bolts through mounting holes in end-plate, remove oil pipes and control valve.

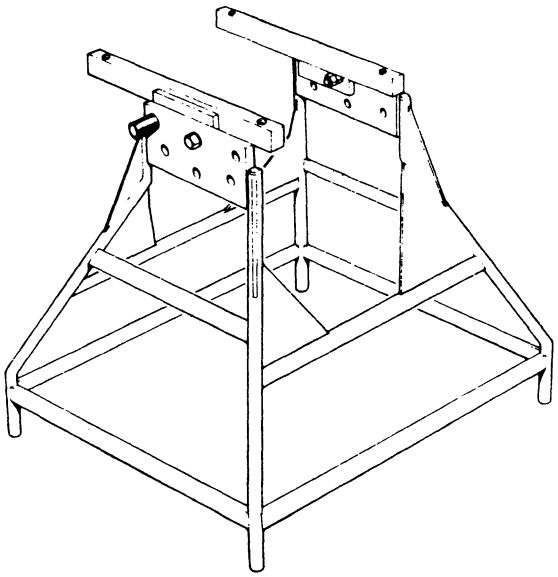

Figure 22 – GEARBOX SUPPORT STAND
Made to drawing MISC 1747 – available from David Brown Service Department.

Mark the two sequence valves; **these have different settings and must be refitted in their original positions.** Remove both brake cylinders: pistons will remain in cylinders and compression springs will be exposed. Release locking plates from fixed end of brake bands and slacken nuts. Remove circlip and flat washer from inside each spring sleeve then unscrew nuts from end of bands. Remove springs and piston stops. Finally remove nuts and spherical washers from the fixed end of brake bands.

Remove support snout then remove four nuts from front end-plate and push end-plate from studs.

Turn first unit so that one of the planet gears is at the top, push upper ends of brake band inside case then remove band by manipulating it over carrier and out towards front: piston end of band being extracted last.

With unit still positioned with a planet gear towards the top – otherwise it will not pass out of case – carefully lever complete unit forward until it is clear of bearing and can be drawn forward clear of gearbox. Extract abutment washer and free-wheel from recess inside centre web, noting which way round these are fitted.

Remove the four-speed section casing complete with rear planetary unit from the range section of the gearbox. The rear unit may now be removed. A suitable lifting bracket is shown in Fig. 23.

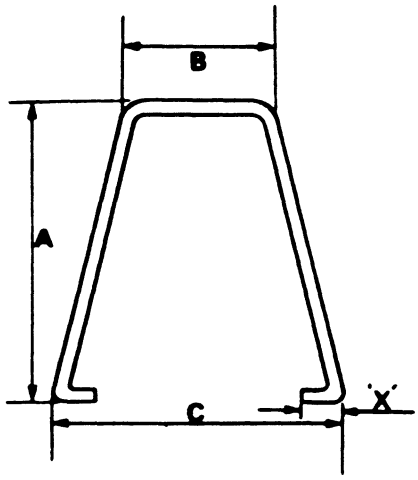

Figure 23

Material – 18 in. (260 mm) long (minimum)
$\frac{3}{4}$ in. (19 mm) wide
$\frac{3}{16}$ in. (4·7 mm) thick

A. 7 in. (178 mm)
B. 2 in. (50 mm)
C. 7 in. (178 mm)
X– $\frac{1}{2}$ in. (12·7 mm) Form to give firm grip on planetary unit

Dismantling Four-speed Units: Place assembly on bench and mark all three parts of carrier. Unlock tabwashers and remove the six bolts from front of carrier. Slacken the bolts evenly because the two halves will be pushed apart by the springs inside. If the two halves do not separate by spring pressure a hide-faced hammer, or wooden block should be used to tap them apart. **Do not damage grooved friction surface of carrier by using a chisel.** After separating two halves of carrier, remove clutch plate and springs. The piston can be removed by tapping front half of carrier on a block of wood.

Lightly mark the four bearings, so that if not renewed they can be refitted in their original positions.

Dismantling the Range Gearbox: Mark the two differential side-bearing caps. Unlock tabwashers and remove bolts, then lift differential assembly from gearbox.

Before commencing to dismantle range section, first fit four 13$\frac{1}{2}$ in. (343 mm) lengths of $\frac{1}{2}$ in. (13 mm) bore tube, with a flat washer at each end, on all four case studs. Replace and fully tighten the stud nuts, so that end-plate is clamped firmly in position, then check end-float of pinion shaft, top shaft and lay-shaft. If these are not correct, see Data page 32, make a note of the corrections which will be required when re-assembling.

Remove the grubscrew which locks the bevel pinion nuts to the bevel pinion. Put the unit in gear

by levering one of the selector jaws out of neutral so that a brass drift can be inserted through case and the gears prevented from turning whilst the pinion shaft nuts are being removed (the nuts have a left-hand thread). Remove taper roller bearing.

Note: The range box can be dismantled with the Differential and Bevel Pinion in position (horizontal).

Remove small bolt from end-plate then push end-plate off dowels and slide it off studs. Turn gearbox into vertical position then extract pinion shaft downwards. Remove distance pieces, gears and roller bearings, etc., from case and lay these on the bench in order of extraction. Remove layshaft and top shaft.

To remove selectors, push one selector rod forwards, **whilst the other rod is in neutral position**, until it is clear of the detent ball. Repeat with other selector, taking care of springs and detent balls which are in holes underneath selector rods. After removing both selector rods, remove gear lock plunger; this is in cross drilling between selector rods and should be removed either by pushing out with a bent wire or turning case on its right-hand side and allowing plunger to fall out.

Oil Pump: This is mounted on right-hand side of range gearbox and can be removed if the six bolts are removed from range gearbox end-plate. The four longest bolts also attach the pump outlet connector to gearbox. When all the bolts have been removed push pump body off its dowels then remove pump out of gearbox case.

Pump driven gear is on a taper shaft and must be removed with an extractor. **Do not attempt to hammer the shaft out of the gear;** this will cause the sharp corners of the rotor teeth to cut into the softer bearing.

INSPECTION OF PARTS

Inspection of Parts: Wash all parts, lay them on a clean bench and carry out an inspection, paying particular attention to the following:

Clutch Plates: These should be free from distortion and **not** excessively worn. Each plate should be flat to within 0·005 in. and parallel to within 0·002 in. As the sintered bronze facings wear the depth of the grooves in each face will reduce.

The clutch plates, backing plates and piston should be washed, dried and compressed under a load of 2500 lb (Fig. 24) to check the assembly thickness. This thickness should not be below:

Groove depth:	0·003 in. (0·075 mm)
Loaded height (front):	1·185 in. (30·10 mm)
Loaded height (rear):	1·510 in. (38·35 mm)
Buffer spring protrusion:	0·050 in. (1·27 mm)

If the assembly thickness is below these figures a new clutch plate pack should be fitted. These packs are selectively assembled at the factory to the correct dimensions and should be fitted with the original piston.

Spool Valve: Remove hexagonal plug from side of valve body and extract detent ball and spring so that spool can be withdrawn downwards. (Fig. 25).

The spool should be free from scoring and a free-sliding fit in the body bore. The upper end of body bore is sealed by two seals fitted back-to-back; outer seal lip outwards to keep dirt out and inner seal with lip inwards to keep oil in.

Ensure that restrictor in centre of spool is clear by blowing through with air. Lightly coat spool with oil, smear oil seals with grease and replace spool.

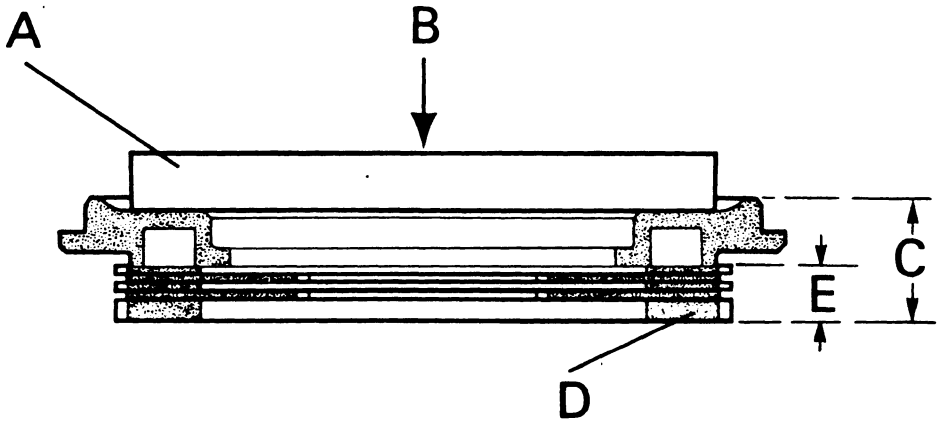

Figure 24 – CHECKING HEIGHT OF CLUTCH PLATES

A. Plate, $\frac{3}{8}$ in. (15·9 mm) thick and $6\frac{1}{16}$ in. (154 mm) diameter to spread load evenly over piston.
B. Static load of 2500 lb (1130 kg)
C. Loaded height, front clutch 1·21 – 1·20 in. (30·74–30·48 mm) and rear clutch 1·545–1·535 in. (39·24–38·98 mm).
D. Clutch backing plate (selectively assembled)
E. Height of clutch plate pack.

Height E		*Clutch Pack Number*
Loaded	Unloaded	
0·523–0·514 in. 13·284–13·055 mm	0·538–0·529 in. 13·665–13·436 mm	963593 (front)
0·858–0·849 in. 20·793–21·564 mm	0·883–0·874 in. 22·428–22·189 mm	963594 (rear)

Turn spool so that detent grooves are opposite plug-hole then replace detent ball, spring and plug.

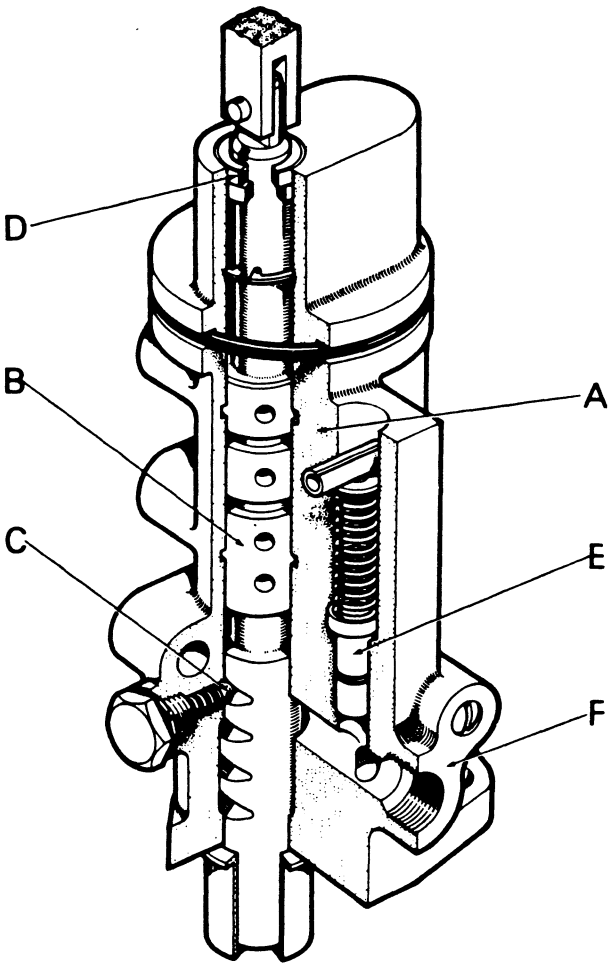

Figure 25 – SPOOL VALVE

A. Valve body
B. Valve spool
C. Detent ball
D. Oil seals
E. Relief valve plunger
F. Oil inlet connection

Relief Valve: This is in valve body and retained in position by a Mills pin. After removing pin, extract shims and spring then hold body upside-down and cover outlet holes so that an air blast through the inlet port will blow piston out.

The piston is fitted with an 'O' ring; which stabilizes the valve and is not a seal. Ensure that the piston is not held open by any foreign matter.

Replace piston, spring and shims as removed. **Do not attempt to increase oil pressure by adding shims or changing spring.** Ensure that Mills pin is replaced securely, so that it will not be displaced by vibration. For pressure adjustment refer to transmission checking procedure, page 27.

Oil Pump: As operating pressure is very low, oil pump should give very long service if transmission oil is kept clean. (Fig. 26).

If rotors and bearings are free from scoring, fit inner bearings, with new 'O' rings, rotors and outer bearings in pump body and place a straight-edge across body face. If faces of bearings are not below body face the bearings are serviceable, but if bearings are below body face there will be excessive oil leakage past rotor sides, due to lack of pressure loading and should therefore be replaced. When new there should be 0·012–0·016 in. (0·30–0·40 mm) protrusion.

Ensure that bearings are replaced in their original positions when assembling pump. Do not hammer gear on to shaft – this may cause rotor teeth to mark bushes – but hold gear whilst fully tightening nut.

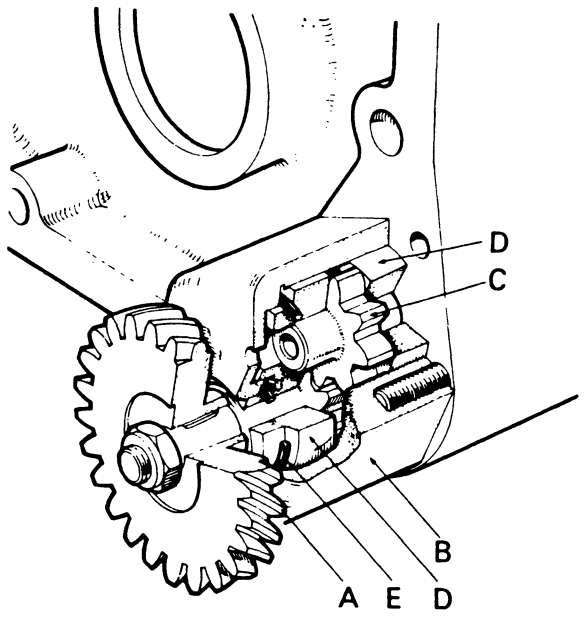

Figure 26 – OIL PUMP

A. Drive gear
B. Body
C. Driven rotor
D. Bearing bushes
E. 'O' rings

Support Sleeve Sealing Rings: These should be renewed if broken or worn and can be examined without being removed. As the oil pressure pushes the rings apart to form a seal, the wearing faces will be on the outersides of the rings and a slight marking on these faces will not be detrimental. If the rings are removed ensure that they are refitted the correct way round: **chamfered sides of rings must be towards the outsides,** i.e. away from central oil feed. See Fig. 10.

Sequence Valves: The pressure setting of a sequence valve is the pressure at which the piston moves sufficiently against the spring to allow oil to be supplied to the clutch cylinder.

All sequence valves are given a nominal pressure setting at the factory of 34–36 lb/in² with a flow of 0·5 gals/min (with recommended transmission oil) at 45–50°C (113–112°F). This nominal setting can be obtained in the field by carrying out the following

Static setting procedure:

1 Dismantle the sequence valve and plug the piston orifice using a small disc of masking tape or other suitable tape.

2 Reassemble the valve.

3 Using suitable adaptors, connect the sequence valve up to the brake band piston actuator and pressure gauge.

4 Connect a lever type grease gun filled with transmission oil (workshop temperature) to the actuator. Operate the hand lever to raise the pressure smoothly and slowly. Watch the pressure gauge carefully and note the pressure at which the needle gives a downward flick. This will indicate that the piston has travelled sufficiently to open up the outlet port to the clutch cylinder, (the loss of oil causing the pressure drop). This can be verified by observing oil present at sequence valve outlet port.

5 Adjust the sequence valve so that the highest pressure before the drop is 31–32 lbs/in². (This will be equivalent to the factory setting of 34–36 lb/in² with a flow of 0·5 gals;min).

6 Remove masking tape from the pistons.

SEQUENCE VALVE SETTING PROCEDURE

Fitting Sequence Valves to the Gearbox

If a new sequence valve (factory set) or a sequence valve which has been adjusted to the nominal setting (as above) is fitted to a tractor, the following points should be observed:

1 If the valve is fitted in the front position, increase the setting by screwing the adjuster in **two full turns** from nominal.

2 If the valve is fitted in the rear position, **do not** disturb the adjustment from the nominal setting.

Assembling Range Gearbox: Before re-assembly can be commenced it is necessary to temporarily assemble range gearbox to determine the thickness of shims required to obtain correct setting distance for bevel pinion and give correct amount of end-float in top shaft and layshaft. If no new parts have been fitted which will affect the shaft settings the temporary re-assembly will not be necessary if the original shims are undisturbed and the settings checked later.

The bearing outer shell can be removed to enable shims to be changed. With case on its back, so that the four studs are vertical, place top shaft and layshaft in position then replace end-plate. Replace the four pieces of tube, flat washer at each end and, fully tighten the stud nuts so that end-plate is held firmly in position. Check end-float of top shaft and layshaft; these should both have 0·002 to 0·004 in. (0·05 to 0·10 mm) end-float and if the end-float is incorrect make a note of the corrections required.

Fit pinion shaft, without gears but with rear bearing in position in gearbox; fit front bearing, washer and nut but not shims. Tighten inner pinion nut until all end-play is removed and bearings become tight. Rotate pinion whilst tightening nut, to ensure that rear bearing track is seated against support plate.

Assemble setting gauge (Service Tool DB8208) by fitting thickest (6·3125 in.) spacer on tool probe and screwing probe as far as possible into tool mandrel

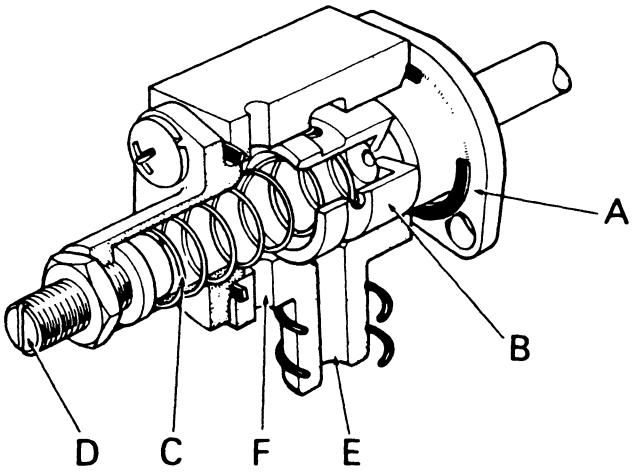

Figure 27 – SEQUENCE TIMING VALVE

A. Oil inlet pipe
B. Piston
C Spring
D. Adjusting screw
E. Connection to clutch cylinder
F. Spill port

(Fig. 28). Mount tool on end-plate, fitting dummy bearings in end-plate bores and bolting bearing caps in position to hold tool in place.

Slide mandrel to bring probe into position and unscrew probe until probe tip makes light contact with rear face of pinion bearing. Tighten locknut to prevent probe turning then recheck that it is making light contact with bearing. (Fig. 29).
or trough. (Fig. 29).

Check the correction figure etched on pinion face. If this figure is negative (−) subtract it from 0·030 in. and if it is positive (+) add it to 0·030 in. Subtract the resulting figure from the gap between spacer and mandrel – which should be measured with a feel gauge – to obtain the thickness of shims required to set the pinion in its correct position, e.g., if pinion is marked −·007 and gap measures 0·057 in. then

0·030 − 0·007 = 0·023 in. and shims required are 0·057 − 0·023 = 0·034 in.

If pinion had been marked = 0·007 then

0·030 + 0·007 = 0·037 in. and shims required are 0·057 − 0·037 = 0·020 in.

After rechecking the figures, make a note of the shim thickness required and remove tool from end-plate. Remove pinion and separate the two end-plates. Tap rear bearing track out of end-plate bore fit shims of required thickness in bore, and refit track, tapping it firmly against shims and bearing plate.

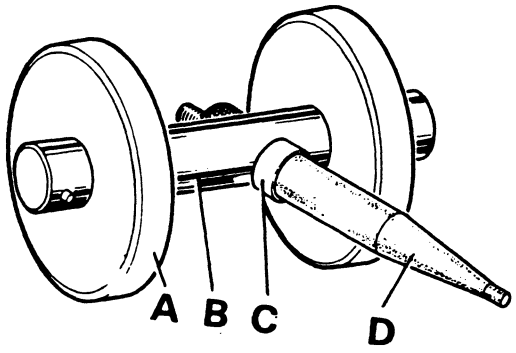

Figure 28 – PINION SETTING GAUGE SERVICE TOOL DB8208

A. Dummy Bearings
B. Mandrel
C. Probe
D. Spacer

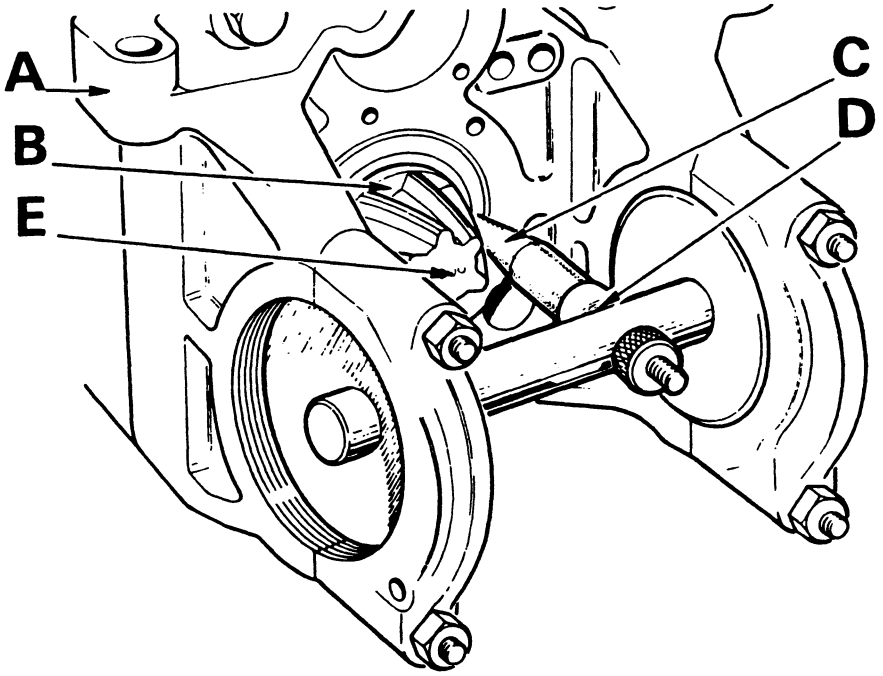

Figure 29 –.CHECKING PINION SETTING DISTANCE

A. Rear end plate
B. Pinion bearing
C. Probe
D. Measured gap

Commence final assembly by fitting selector rods. Replace medium/reverse range detent ball in case hole then slide selector rod, with fork attached, into position. It will be necessary to hold detent ball down against spring until selector rod passes over ball and the tool shown in Fig. 30 is useful for this. Turn flat on tool so that it is facing end of selector

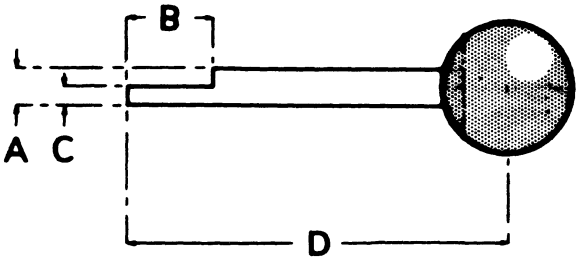

Figure 30 – TOOL FOR COMPRESSING DETENT SPRINGS

A. $\frac{3}{8}$ in. (9·5 mm)
B. $\frac{5}{8}$ in. (15·9 mm)
C. $\frac{3}{16}$ in. (4·8 mm)
D. 6 in. (150 mm)

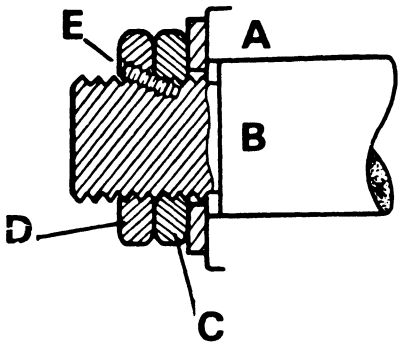

Figure 31 – LOCKING BEVEL PINION NUTS

A. Bearing
B. Bevel pinion shaft
C. Tighten inner nut to 200 lb ft. Shim to give 0·002 in (0·50 mm) end float 0 002 in (0·50 mm) pre-load
D. With inner nut locked to prevent rotation on shaft tighten outer nut.
E. Drill 9/64 in. (3·7 mm) dia $\frac{5}{8}$ in (15 9 mm) deep, tap in. Whitworth in. (14 3 mm) deep in line with corner of nut Secure grubscrew with loctite and peen end of hole over.

rod then push ball down and push selector rod in at same time When end of rod touches flat on tool, ball will be partially under end of rod, and withdrawing tool whilst applying slight pressure to rod will enable rod to be pushed completely over ball.

Set medium/reverse range selector rod in neutral position. Fit locking plunger in hole between selector rods and replace low/high detent spring and plunger Replace low/high selector rod, compressing detent spring in same manner as when fitting previous rod.

Turn end-plate on its back so that the long studs are vertical, fit layshaft and top shaft. Replace pinion shaft gears, dog clutches and distance pieces. Ensure that these are replaced in their correct order (Fig. 32) and the clutch members are engaged in the selector forks.

Slide end-plate down on studs, guiding selector rods into position, until plate is located on dowels. Push pinion shaft upwards into box, guiding it through distance pieces and clutches etc., until final distance piece, shims and front bearings can be fitted. Hold shaft upwards until flat washer and nut have been fitted.

Temporarily fit the pieces of tube and flat washers on the four studs and fully tighten stud nuts. Hold pinion stationary by moving one of selectors into engagement and using a brass drift against one of the gears, so that shaft nut can be fully tightened.

Tighten the bevel pinion shaft nut to 200 lb/ft (27·7 kgm). Fit the outer lock nut and then fit the grubscrew as shown in Fig. 31.

Note: Nuts must be locked with a grubscrew as they will work loose. New pinion shafts will require drilling and tapping to accommodate the grubscrew.

With stud nuts and pinion nut fully tightened, first check that layshaft and top shaft have correct amount of end-float, then check pinion setting. This should be 0·002 in. (0·005 mm) end-float to 0·002 in. (0·005 mm) pre-load, and can be adjusted by removing pinion nut, washer bearing front end-plate and removing spacer and changing thickness of shims. When the pinion bearing setting is correct, remove nuts and tubes from studs and fit single bolt through end-plate.

Assembling four-speed section of Gearbox: First assemble the rear reduction unit. Lay the carrier on bench, bearing pins uppermost Smear bearing pins with oil, check that each pinion has two needle roller bearings with a distance piece between, then fit pinions on pins. Turn pinions so that centre-punch marks are towards centre (Fig. 33); place sun-gear – shoulder at top of gear shoulder. Fit end-plate on carrier, align assembly marks and push plate down on to dowels.

Fit bolts, with locking plates, and tighten by diametrical selection. Lock bolts with plates, ensuring that locking plates cover dowels and ends of plates are turned over neatly, otherwise they may foul on

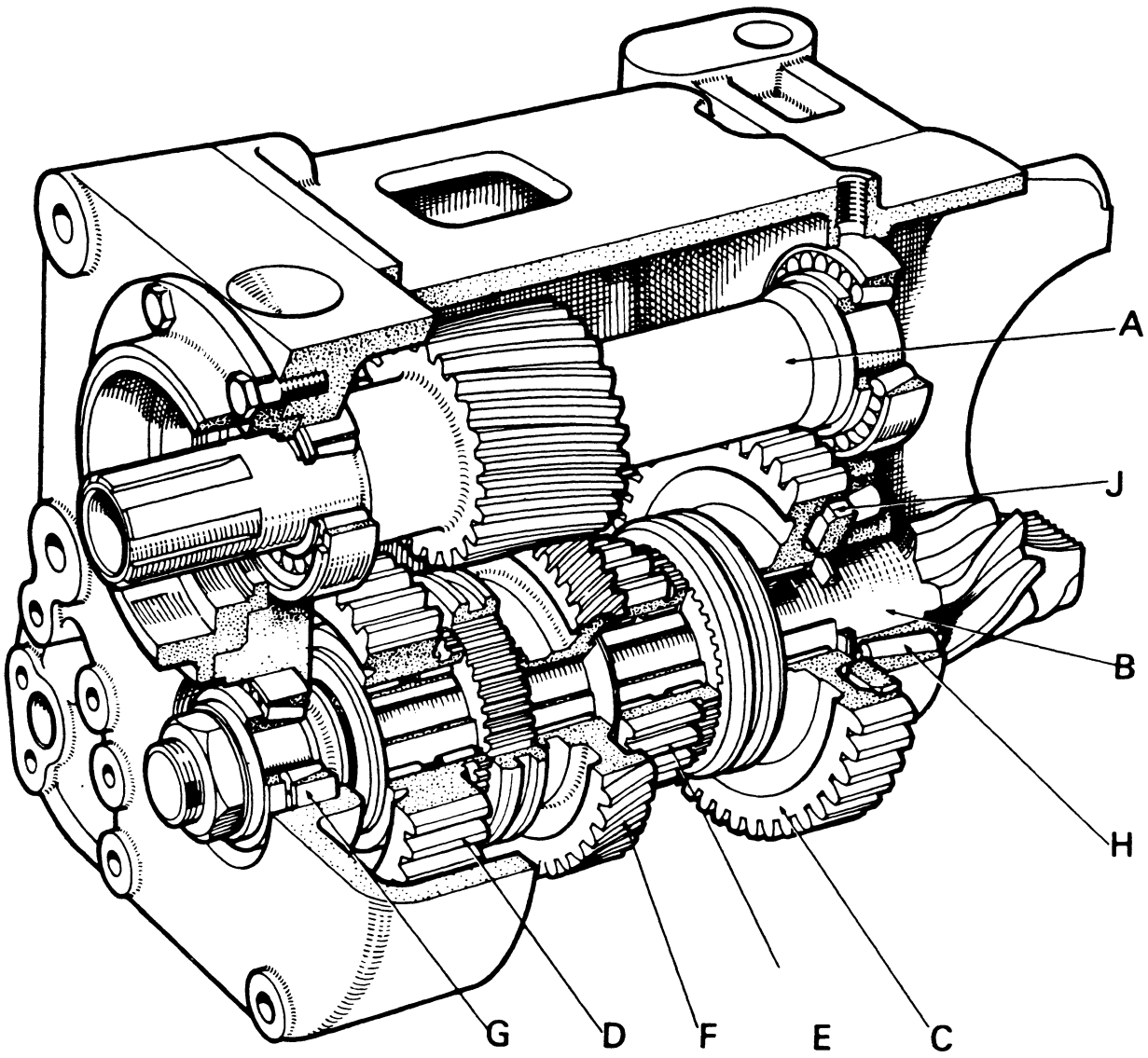

Figure 32 – RANGE GEARBOX

A. Top shaft
B. Pinion shaft
C. Gear – low range
D. Gear – medium range
E. Gear – high range
F. Gear – reverse range
G. Pinion front bearing
H. Pinion rear bearing
J. Cover plate – rear bearing

pinion nut. Turn carrier over, smear small thrust washer with oil, fit it into recess in sun-gear and insert driveshaft into centre of planet gears.

Fit thick steel clutch plate in carrier recess, followed by alternately places bronze and thin steel plates. There should be four bronze plates and four thin steel plates with a steel plate on top of the pile. The bronze plates are grooved with the exception of one of them which should be fitted in the second or third position. (Fig. 34). Wipe cylinder clean, fit new 'O' rings on piston; fit piston in cylinder. Replace the eighteen springs in carrier holes and the nine buffer springs in piston. To prevent the buffer springs dropping out when cylinder is inverted for fitting, liberally smear springs with grease before placing them in piston holes.

Turn cylinder over and hold it a short distance above carrier; ensure that none of the small springs have fallen out of piston on to clutch plates, then lower cylinder onto carrier. Align assembly marks, fit bolts and tab washers. Tighten bolts evenly, by diametrical selection, and when fully tight lock with tabwashers.

Assemble the front unit in the same way as the rear – the only difference being that the driveshaft need not be fitted and there are only two bronze plates, both of which are grooved, two thin steel

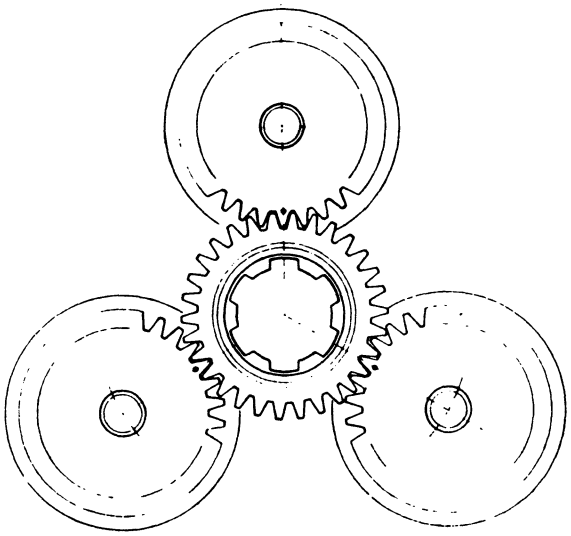

Figure 33 – ASSEMBLING PLANETARY UNIT
Gears to be meshed so that centre punch marks on planet gears are towards centre of sun gear.

plates and a thick steel plate and six buffer springs in the clutch.

If only the range section of the gearbox requires servicing, the four-speed section will be intact and the two will only require fitting together. See instruction 'C'.

Provided only the front unit of the four-speed section required servicing, the range section and rear unit will still be intact. See instruction 'A' for fitting of the front unit.

If the rear required servicing, see 'B' for assembly to the front unit and 'C' for assembly to the range section of the gearbox.

A: Fit free-wheel into recess in the four-speed housing section. **Ensure that the flange on free-wheel cage is towards the differential end of gearbox** (Fig. 35) then replace abutment plate with outside shoulder upwards. Replace front unit assembly. Set carrier so that one of the planet gears is opposite gap in spacer and engage sun-gear on splines of rear unit driveshaft. Lower carrier until it enters free-wheel, rotate the unit in a clockwise

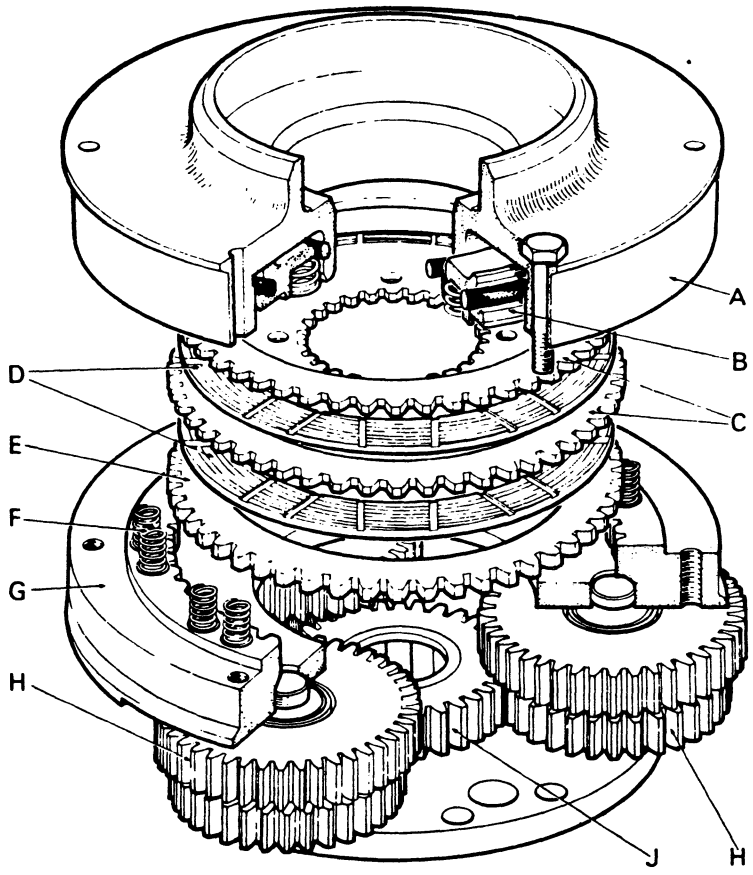

Figure 34 – PLANETARY UNIT LOCK-UP CLUTCH

A. Clutch cylinder
B. Clutch piston
C. Steel clutch plate – thin
D. Bronze-faced clutch plate
E. Steel clutch plate – thick
F. Return springs
G. Planet carrier
H. Planet gears
J. Sun gear

direction, then push carrier down until bearing is at bottom of spacer recess. Guide brake band over carrier and into position in spacer. Push ends of band through holes in spacer – end of band with longest screwed end towards piston – but do not fit adjusting nuts

Place small thrust washer in centre of sun-gear. Ensure that bush and seal are positioned inside driveshaft then fit driveshaft through clutch plates and into mesh with planet gears.

Check that sealing rings and thrust washer are in position on front end-plate then lower end-plate on to studs. **Ensure that the sealing rings are positioned centrally in their grooves. If the rings are towards one side they will not enter the carrier chamfer and will be trapped and broken.** Carefully lower end-plate until ball-race enters end-plate bore, then fit and fully tighten the stud nuts.

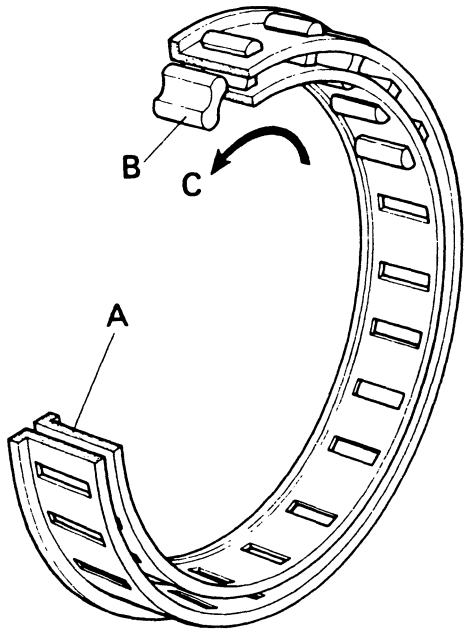

Figure 35 – FREEWHEEL CLUTCH
A. Cage
B. Sprag
C. Direction of free rotation

C. With range gearbox already assembled and in the horizontal position, place a free-wheel in case recess, **ensuring that flange on the free-wheel cage is the differential end,** (Fig. 35). Then place abutment plate, lip upwards, on top of free wheel.

Replace gearbox spacer, the carrier will need turning until one of the planet gears is in line with the gap in spacer. Allow spigot on the carrier to enter free-wheel mechanism, turn carrier clockwise when spigot is pushed into free-wheel. **Ensure that the sealing rings are central in their grooves**; if they are to one side they will not enter carrier chamfer but will be trapped and broken. Continue lowering the spacer carefully down the studs, guiding the brake-band onto carrier at the same time, until the sealing rings enter carrier and then push spacer fully down.

B. Place the rear unit brake-band (this is the longest band) inside the rear end of the gearbox casing. Place the ends of the bands in their location, noting that the piston end of the band has the longest screwed end, but do not fit adjusting nuts.

With the gearbox vertical, lower the rear unit into the gearbox spacer, taking care not to leave out the thrust washer. The driveshaft locates in the sun gear.

Slide new oil seal on clutch driveshaft – lip towards gearbox. Carefully guide seal over shaft shoulder; tap seal into position before replacing support snout. Fit new 'O' ring on outside of support snout flange. Before tightening the brake bands, check that both four-speed unit carriers can be turned in the direction of engine rotation but cannot be turned in the opposite direction. Also check that carriers turn freely. Locking plates on carriers are very close to spacer webs, and if not turned over neatly may foul as carrier revolves.

Assembling and Setting Brake-bands: With all locating screws as far from bands as possible, align bands so that fixed ends are central in case holes, then fit spherical washers and nuts to the end of the brake-bands. Screw the nuts down until they contact the spherical washers and are flush with the threaded end of the brake-band. Fit stop spring and sleeve on lower ends of bands and retain these in position by fitting spherical washers and nuts. Ensure the bands are seated correctly and then tighten lower adjusting nuts. Compress the spring until face of spring sleeves are $1\frac{3}{16}$ (30·16 mm) or $1\frac{1}{8}$ in. (28·6 mm) if a new band has been fitted – from machined face of casting. Check that band does not protrude so far through nut that end of thread is proud of sleeve face, then fit washer and circlip.

Tighten each locating screw (three on front unit band and four on rear unit band) until they touch bands. Then unscrew front band screws three-quarters-of-a-turn, rear band screws half-a-turn and hold stationary whilst tightening locknut. (Fig. 36).

Fit the pistons in cylinders and then replace cylinders with pipe connections towards centre.

Replace the two sequence valves, **ensuring that the valves are fitted in original position:** by refrence to the marks made during dismantling. Place the spool stop in the hole in gearbox spacer and then refit control valve ensuring spool is free from binding in spool stop in all spool positions. Fit the lubrication pipes at the same time. Ensure that the restrictors are fitted at the control valve end of the brake pipes.

Place new 'O' rings in end-plate ports then replace pump and connector. Locate pump body dowels in end-plate holes, replace and fully tighten bolts. Connect high-pressure pipes, ensuring that all unions are fully tightened. Torque figures for pump and connector shown on page 32.

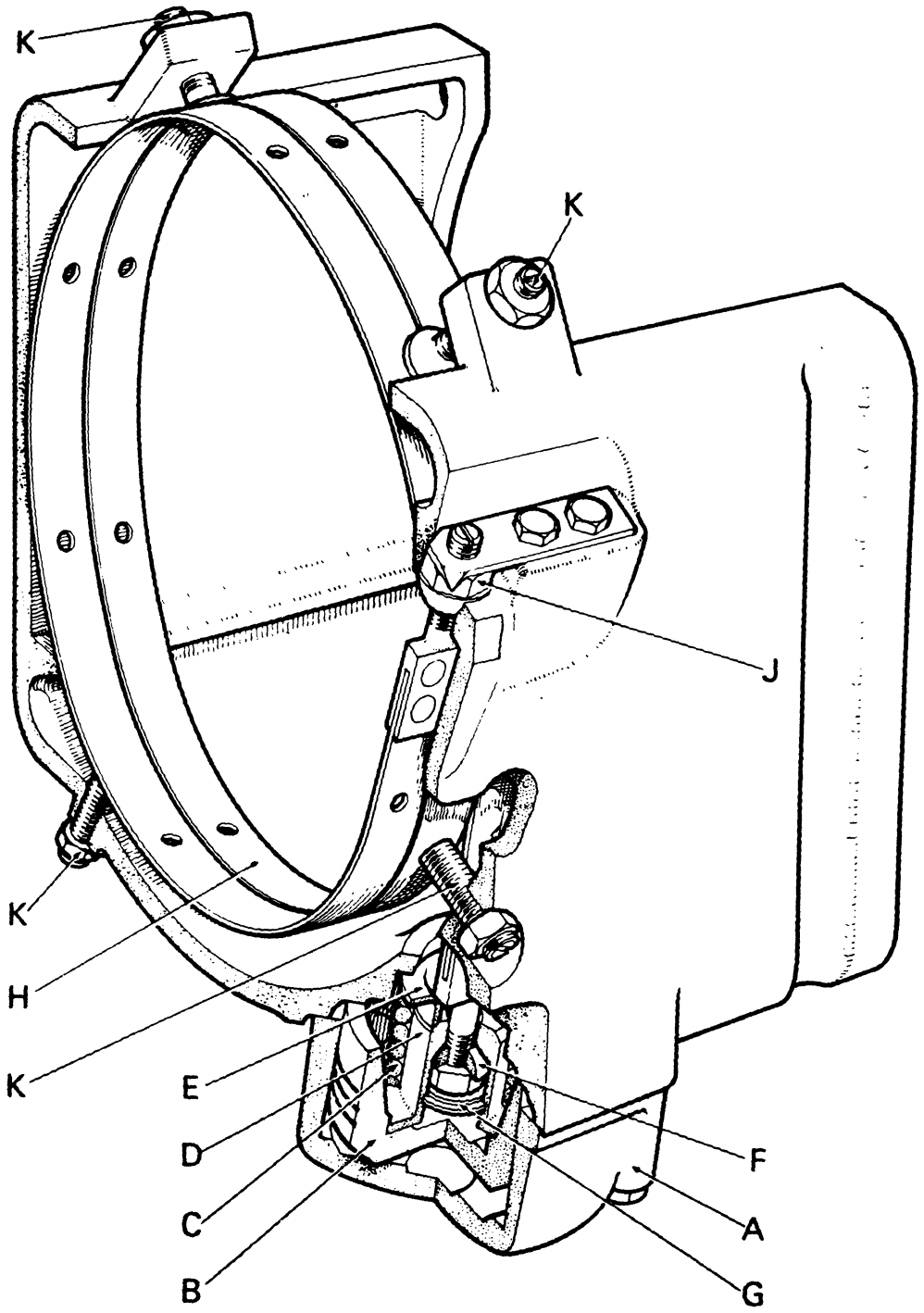

Figure 36 – BAND BRAKE ASSEMBLY

A. Cylinder
B. Piston
C. Spring
D. Sleeve
E. Stop – piston
F. Spherical washer
G. Circlip
H. Band brake
J. Adjusting nut
K. Stop screws

TRANSMISSION FAULT FINDING

Before any adjustments or repairs are undertaken on the transmission, the tractor should be road tested. This will establish whether a fault does exist, and if so, what the nature of the fault is, so that the correct action can be taken.

Road Testing

Note: Road Tests should be conducted at 1800 rev/min. in the High range. The engine speed should be set with the hand throttle.

The detection of a normal or a faulty gear change during road testing depends on the tester observing the acceleration or deceleration of the tractor and the change in exhaust note which accompanies a change in engine load. Observation of the engine speed indicator will show when the engine load varies.

When the engine load is suddenly increased, the exhaust note increases sharply and the engine speed drops momentarily until the governor returns it to the governed speed. When the engine load is reduced, the exhaust note drops and is slightly muffled as the engine is on the overrun, and the engine speed increases.

Normal Changes

(a) **Upwards**

When the tractor is driven along a level road in high range, at an engine speed of 1800 rev/min. and a higher gear is selected, the engine note will increase as the tractor accelerates and the engine speed drops momentarily. This should occur within one second of the Hydra-Shift lever being moved.

(b) **Downwards**

When the Hydra-Shift lever is moved to select a lower gear, the engine note will decrease and the engine speed will increase as the tractor is decelerated. This should occur within 2-3 seconds of the Hydra-Shift lever being moved.

Faulty Changes

(1) **Changes between 1st and 2nd, and also between 3rd and 4th**

Changing between 1st and 2nd gears involves the engagement or disengagement of the clutch in the front unit only. Similarly, changes between 3rd and 4th gear involve changes on the front unit only. Therefore, correct upward changes between these gears depends mainly on having an adequate volume of oil flowing to the first unit clutch.

Thus, a faulty change from 1st to 2nd will show up as a delayed change. (Several seconds delay between moving the Hydra-Shift lever and the change occurring).

A faulty change from 3rd to 4th will show up as a delayed change due to low volume oil supply or possibly a drop into 1st gear due to an extremely low oil supply which is not sufficient to pressurise both clutch cylinders at once.

Faulty downward changes, 2nd to 1st and 4th to 3rd, will show up as a time lag between moving the Hydra-Shift lever and deceleration occurring, the most likely cause being brake band wear.

(2) **Changes between 2nd and 3rd**

Both reduction units are involved in changes – upward or downward – between 2nd and 3rd gears, and the operation of the two units are synchronised by two sequence valves. During a change from 2nd to 3rd, the rear clutch is being engaged and the front clutch is being disengaged.

If rear clutch engages before front is disengaged, there is a state of **overlap.**

If front clutch disengages before rear clutch engages there is a state of **underlap.**

During a road test, these two faults can be identified as follows –

'Overlap' Condition

(a) When changing from 2nd to 3rd, there is no tendency to drop into first gear, but there is a slight jerk as 3rd is engaged. This is because the transmission instantaneously tries to go into 4th gear.

(b) When changing from 3rd to 2nd on over-run, tractor will appear to free wheel for a distance before braking occurs. Just before the braking occurs, the engine governor can be heard to cut in. This is because 4th gear is engaged before 2nd gear.

'Underlap' Condition

(a) When changing from 2nd to 3rd, the tractor slows before being accelerated into 3rd with a surge. This is due to the transmission engaging 1st gear for a split second.

(b) When changing from 3rd to 2nd the tractor will appear to free-wheel for a distance before braking occurs, but there will be no governor surge. This is because for an instant both clutches are disengaged (1st gear condition) and both bands are also partially disengaged. The front band is on the process of being released and the rear band is in the process of being clamped. In this condition a higher ratio than 3rd occurs for the short time as the drums and carriers can rotate in the forward direction – (the free wheel ratchet only prevents rotation of the drums in a reverse direction).

SEQUENCE VALVE ADJUSTMENT IN TRACTOR

Sequence valves sometimes require slight adjustment to match individual transmissions at the factory but it is very unlikely that any further adjustment will be required in service. However, if adjustment is found to be necessary due to having to fit new parts, the following points will be useful:

1 Front valve controls the release of the front clutch (change from 2nd to 3rd gear).

2 Rear valve controls the release of the rear clutch (change from 3rd to 2nd gear).

3 'Underlap' is cured by unscrewing the appropriate sequence valve to give slower clutch release.

4 'Overlap' is cured by screwing in the appropriate sequence valve to give faster clutch release.

ROAD TEST PROCEDURE

Ensure that the transmission is filled with the correct grade of oil to the correct level. Check that the Hydra-Shift lever moves freely and the spool valve engages in four positive positions. Start the engine. With the range lever in neutral run the engine at about 1500 rev/min. until the transmission oil reaches a temperature of at least 45°C (113°F) (Warm-up time will be reduced if the Hydra-Shift lever is moved to 4th gear and the hydraulic system is operated at maximum T.C.U. pressure).

Test 1

Select High Speed in the Range Unit and 1st gear on the Hydra-Shift lever. Drive the tractor on level ground at an engine speed of 1800 rev/min. Select 2nd, 3rd and 4th gear before moving the lever to the next gear. **(All movements of the Hydra-Shift lever must be quick and positive, otherwise incorrect symptoms will be obtained).** Then change down from 4th to 3rd, 2nd and 1st in a similar manner.

Note the standard of gear changes and check that they are acceptable by reference to the information on normal and faulty changes.

Test 2

If an incline is available where tests can be conducted in safety, repeat Test 1 on the incline. If an incline is not available, repeat the test towing a loaded trailer.

Select gears from 1st up to 4th in sequence when travelling up the incline. (If very steep, it may not be possible to change to 4th gear). Make downward changes when travelling down the incline.

When on the downhill run set the engine to 1800 rev/min. with the Hydra-Shift lever in 4th gear. Move the lever into 3rd gear and check that the change takes place. Brake the tractor until the engine speed has dropped back to 1800 rev/min. again (but leave the throttle in the same position). Then change into 2nd gear and observe the change. Once again brake the tractor until the engine speed returns to 1800 rev/min. and then change into 1st gear.

On downward gear changes downhill, deceleration should occur within 2 to 3 seconds of moving the Hydra-Shift lever.

If road tests (1) and (2) reveal a faulty gear change consult the Chart on pages 29–31 which will be useful in deciding what the possible cause of the fault is and what action should be taken.

If tests (1) and (2) reveal no fault, carry out Test 3 to ensure correct operation at lower speeds.

Test 3

Select high speed in the Range Unit and 1st gear on the Hydra-Shift lever. Drive the tractor on level ground at an engine speed of 1000 rev/min. Select 2nd, 3rd and 4th gears in sequence, allowing the transmission to change into the selected gear before moving the lever to the next gear.

The tractor should change gear smoothly, but a few seconds may elapse before each change is completed.

If the transmission will not change out of 1st gear, gradually increase the engine speed until the change takes place. If the change occurs at 1200 rev/min. or below and this limitation does not affect the tractor operation, no action is necessary if the pressure is within specification. Otherwise the cause of insufficient oil pressure will have to be investigated.

If road testing the tractor indicates a faulty gear change, then checking the system pressures will help to confirm or eliminate certain possible causes of the fault.

PRESSURE CHECK

Note: The pressure gauge used for such checks should be a 7.0 kg/cm² (0–100 lb/in²) gauge with graduations of 0.15 kg/cm² (2 lb/in²) and should also be damped. With the tractor stationary, connect the gauge to the tapping point on the spool valve. Early tractors have a 0.448 in. AF brass plug, while the later tractors have a 0.500in. AF steel plug, blanking off the tapping point. Access to this tapping point is obtained by removing another plug in the right-hand side of the gearbox cover on the latest tractors. The gearbox cover will require removing on early tractors. Figure 21 shows the dimensions to which the older gearbox cover may be modified to delete the operation of removing the gearbox cover to reach the spool valve tapping.

Start the engine and run with the range lever in neutral until an oil temperature of 45°C (113°F) is reached. (Warm-up time will be reduced if the Hydra-Shift lever is moved to 4th gear and the hydraulic system is operated at maximum T.C.U. pressure. **DO NOT** put the hydraulic control lever into **SELECT** to warm up the oil, as continuous blowing of the relief valve will aerate the oil and so give erratic pressure readings).

When the oil temperature has reached 45°C (113° F) the following tests should be carried out with the range lever in neutral.

Test 1

Assemble the pressure gauge (fig. 37). Move the Hydra-Shift lever to 1st gear. If the pressure is 4.85 kg/cm² (69 lb/in²) or less, **renew the relief valve 'O' ring K625400** and adjust pressure to 4.99–5.27 kg/cm² (71–75 lb/in²). One additional shim K626743, 0.5mm (0,020 in) thick, will raise the pressure 0.21 kg/cm² (3 lb/in²).

To maintain the correct relief valve spring tension ensure the replacement relief valve plunger is the later type with reduced head thickness (fig. 38).

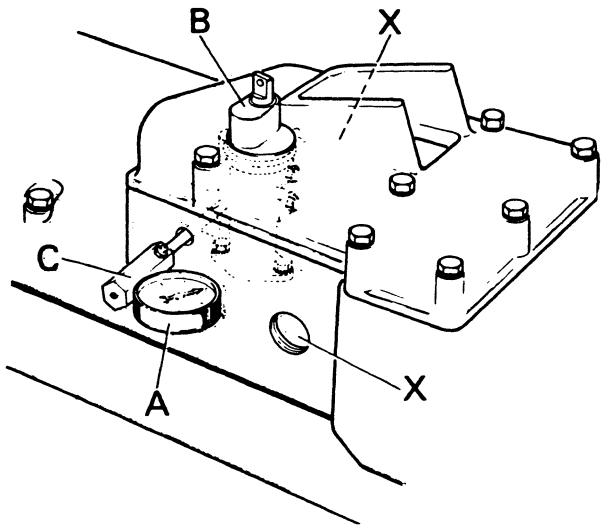

Figure 37. Pressure gauge in position on Spool Valve side for checking gearbox operating pressure and Brake band adjustment.

A. Pressure Gauge DB8267 0-7 kg/cm² (0-100 lb/in²)
B. Spool Valve
C. Connector Adaptor DB8440 replaces earlier tools DB8213 Brake band adjusting Tool and/or DB8249 connector
X. Access points in gearbox cover for brake band adjustment.

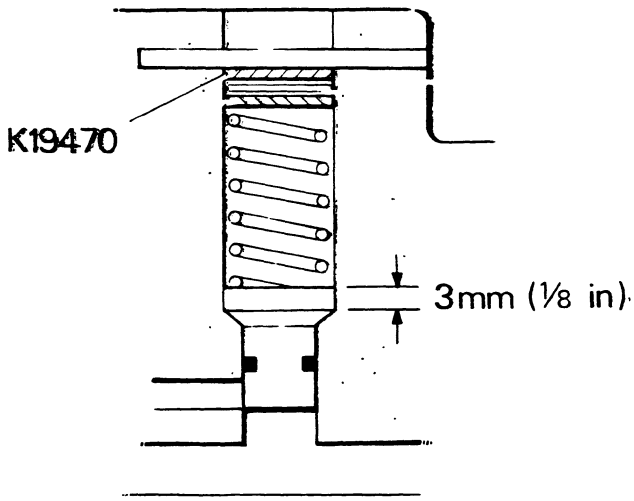

Fig. 38 Relief Valve shimming

Test 2

Select 2nd gear on the Hydra-Shift lever. After an initial drop the pressure should rise again to about 0.02 kg/cm² (0.25 lb/in²) less than the pressure recorded in Test 1.

If the pressure is not within 0.02 kg/cm² (0.25 lb/in²) of the pressure in Test 1, then this indicates that there is an excessive leakage in front unit clutch line.

Test 3

Select 3rd gear on the Hydra-Shift lever. After an initial drop the pressure should rise to a minimum pressure 0.18 kg/cm² (2.5 lb/in²) above the pressure recorded in test 1.

If the pressure is less than 0.18 kg/cm² (2.5 lb/in²) above the pressure in Test 1, then this indicates that there is an excessive leakage in the rear unit clutch line.

Test 4

Select 4th gear on the Hydra-Shift lever. After an initial drop, the pressure should rise again to about 0.26 kg/cm² (3.75 lb/in²) above the pressure recorded in Test 1.

If the pressure is less than 0.26 kg/cm² (3.75 lb/in²) above the pressure in Test 1, then this indicates leakage at either or both unit clutch lines. (Already indicated in Tests 2 or 3).

BRAKE BAND ADJUSTMENT

Earlier tractors necessitating removal of gearbox cover 1212→1001333.

During operation of the tractor, wear will gradually take place at the brake bands, and this wear will eventually affect operation of the transmission.

As the brake bands are provided to give braking on the overrun, wear of the bands will be indicated by a delay in changing down on the overrun or failure to hold in a gear. Where this occurs, the brake bands can be re-adjusted without removing the transmission from the tractor as follows:

1 Clean all dirt from around the gearbox cover.

2 Remove fuel tank, steering column and gearbox cover.

3 Remove both sequence valves and pipes.

4 Connect the brake band piston actuator and pressure gauge to the front sequence valve connection point on the spool control valve and place spool in first gear (upper) position.

5 Connect a lever type grease gun, filled with transmission oil to the actuator, and with the control valve spool in 1st gear apply a constant pressure of 5 kg/cm² (70 lb/in²) so that the front brake piston is pushed to the end of its travel and is held against its stop.

6 With the pressure applied to the piston, tighten front brake band adjusting nut until all slack is removed from the band, using the following procedure:

As the nut is being tightened, check repeatedly that the nut and threaded band end can be moved sideways with light finger and thumb pressure.

This is important, as on early tractors one could run out of thread before taking up band brake slack, and therefore adjustment will have to be done at the piston end. This requires the gearbox to be removed before adjustment can be made.

Tighten nut one flat past the point at which band end can last be moved sideways – overtightening will stretch band – then release oil pressure and **unscrew nut four full turns.** Replace locking plate on nut.

7 Transfer connector to number two sequence valve connection on control valve, then repeat instructions 5 and 6 on number two brake band.

8 Reassemble tractor.

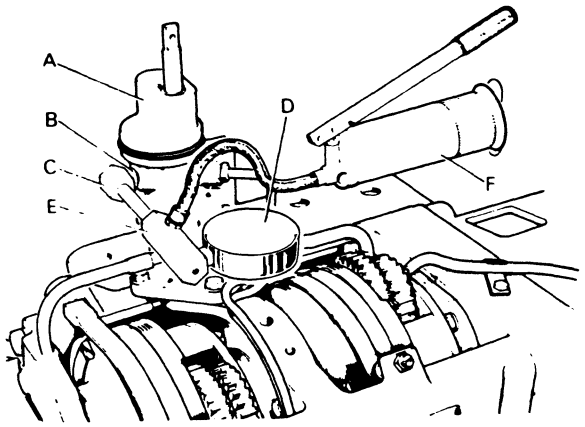

Figure 39. Hydra-Shift Transmission unit tools showing method of manually pressurising brake cylinders to facilitate brake band adjustment.

A. Spool Valve
B. Male/Male Connector
C. Right Angle Special Adaptor
D. Pressure Gauge
E. Connector Adaptor
F. Large Lever Type Grease Gun with Grease Nipple snap on Connector

Brake Band Adjustment: without removing gearbox cover. 1212—1001333 ›; and all 1412.

Later tractors incorporate special plugs in the gearbox cover to enable the band brakes to be adjusted without removing the gearbox cover. The band brakes should therefore be adjusted as follows:

1 Clean all the dirt from around the two special plugs.

2 Remove the plastic cap from the right hand special plug.

3 Release the locknut from the locking screw.

4 Completely back-off the locking screw, and then remove special plug.

5 Remove the locking screw and locknut from the left-hand taper plug, and then remove this large taper plug.

6 Remove third ($\frac{3}{4}$BSP) plug from right-hand side of gearbox cover, then remove pressure tapping plug from control valve. Connect pressure gauge to tapping point with adaptor. Ensure that range lever is in neutral position then start engine.

7 Select fourth speed on Hydra-Shift lever and adjust engine speed to give a pressure gauge reading of at least 5 kg/cm^2 (70 lb/in^2) – this will be approx. 1200 rev/min. engine speed.

8 Tighten adjusting nut on front reduction until band commences to bind and lowers engine speed by approx. 25 rev/min. Depress clutch pedal **immediately engine speed falls** – then **unscrew** adjusting nut **four full turns** before releasing clutch pedal.

9 Repeat item 8 on rear reduction unit band, then stop engine.

Note: These adjustments are best carried out whilst seated astride the tractor.

10 Replace and tighten the left-hand taper plug. Fit the locking screw and locknut, but do not tighten at this stage.

11 Replace the right-hand special gearbox cover plug. Ensure that the locking screw if fitted is fully backed off.

12 Remove gauge adaptor and replace plug in spool valve and gearbox cover.

13 Screw both locking screws in until they just contact end of brake band, then **back them off half-a-turn** and tighten locking nuts. Replace right hand plastic cap. Where no locking screw is fitted, the large plug is self-locking. Screw in to contact end of brake band then back off $\frac{1}{4}$ turn only.

Note: If there is insufficient thread to take up the brake band slack the band has been adjusted previously, and it will be necessary to remove the gearbox to adjust the bands at the piston end.

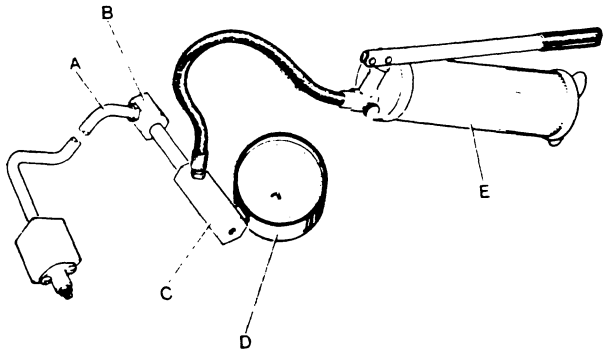

Figure 40 Hydra-Shift Transmission unit tools - showing method of manually pressurising clutch sequencing valve

A Clutch Sequencing Valve and Pipe Assembly
B Right Angle Special Adaptor
C. Connector Adaptor
D Pressure Gauge
E Large Lever Type Grease Gun with Grease Nipple 'Snap On' Connector

SEQUENCE VALVE SETTING

The pressure setting of a sequence valve is the pressure at which the piston moves sufficiently against the spring to allow oil to be supplied to the clutch cylinder.

All sequence valves are given a nominal pressure setting at the factory of 2.39 – 2.53 kg/cm^2 (34–36 lb/in^2) with a flow of 0.375 l/sec. (0 5 gal/min) of tractor oil Universal at 45/50°C (113–122°F). This nominal setting can be obtained in the field by carrying out the following **Static Setting Procedure:**

1 Dismantle the sequence valve and plug the piston orifice using a small disc of masking tape or other suitable tape.

2 Reassemble the valve.

3 Connect the tools as shown to the sequence valve and pipe.

4 Connect a lever type grease gun filled with transmission oil (workshop temperature) to the actuator. Operate the hand lever to raise the pressure smoothly and slowly. Watch the pressure gauge carefully and note the pressure at which the needle gives a downward flick. This will indicate that the piston has travelled sufficiently to open up the outlet port to the clutch cylinder (the loss of oil causing the pressure to drop). This can be verified by observing oil present at sequence valve outlet port.

5 Adjust the sequence valve so that the highest pressure before the drop is 2.18–2.25 kg/cm^2 (31–32 lb/in^2). This will be equivalent to the factory setting of 2.39–2.53 kg/cm^2 (34–36 lb/in^2) with a flow of 0.375 l/sec. (0.5 gal/min).

FAULT FINDING CHART – TRANSMISSION – HYDRA-SHIFT
ENGINE SPEED 1800 rev/min – OIL TEMPERATURE 55°C (131°F) MINIMUM

OVERRUN

	1	2	3	4	5
Symptom	Delay before 4th – 3rd or 2nd – 1st change takes place.	Delay before 3rd to 2nd change takes place. May change to 4th for a few seconds.	Failure to hold in 4th gear. (runs away faster than 4th).	Failure to hold in 3rd gear. (runs away faster than 3rd).	Failure to hold in 2nd gear. (runs away faster than 2nd).
Fault	Front band brake slow to clamp and stop carrier.	(1) Rear band brake slow to clamp and stop carrier. (2) Loss of sequence	Clutch slipping in either reduction unit.	Brake band not applied on front reduction unit.	Brake band not applied on rear reduction unit.
Possible Cause	(a) Worn band (incorrect adjustment). (b) Blocked orifice in sequence valve.	(1) (a) Worn band (incorrect adjustment). (b) Blocked orifice in sequence valve (2) (a) Low pressure (b) leakage at front unit. (c) Excessive travel on front clutch piston travel (d) Rear sequence valve out of adjustment (Only if a new Sequence valve has been fitted).	(a) Low pressure (b) binding clutch piston. (c) Badly worn clutch plates.	(a) Badly worn brake band on front unit. (b) Sticking brake piston.	(a) Badly worn brake band on rear unit. (b) Sticking brake piston.
Action	Adjust brake band Clean sequence valve.	Adjust brake band. Check pressures. Check sequence valves.	Check system pressure in all gears. Check Clutch units.	Check band adjustment. Check piston.	Check band adjustment. Check piston.

FAULT FINDING CHART – TRANSMISSION – HYDRA-SHIFT TRACTOR
ENGINE SPEED 1800 rev/min – OIL TEMPERATURE 55°C (131°) MINIMUM

DRIVE

	1	2	3	4	5
Symptom	Failure to change from 1st gear into any any other gear	Failure to change 1st – 2nd or 3rd – 4th (can engage 3rd)	Failure to engage 3rd or 4th gear (can engage 2nd)	Occasional drop back to 1st gear when in higher gear	Slow engagement when changing 1st 2nd or 3rd – 4th.
Fault	Insifficient oil supply.	front clutch unit not engaging.	rear clutch unit not engaging.	Intermittent oil supply.	front clutch slow to engage.
Possible Cause	(a) Thick oil (b) Blocked filter (c) Faulty relief valve. (d) Worn pump (e) Excessive leakage on both units-possible caused as (a) (b) and (c) for symptoms 2 and 3 (f) Pump sucking air at joint face. (g) spool valve turned 180	Excessive leakage on front unit: (a) At muff sealing rings. (b) At clutch piston 'O' rings. (c) Along supply line, due to broken pipe or sequence valve.	Excessive leakage on rear unit: (a) At muff sealing rings. (b) At clutch piston 'O' rings. (c) Along supply line, due to broken pipe or sequence valve.	(a) Low oil level (b) Partially blocked filter	(a) Low pressure (b) Leak at front clutch muff. (c) Excessive front clutch piston travel. (d) front sequence valve sticking
Action	Check oil viscosity Check pressure in 1st gear prior to investigation. Check for 4 positive detent positions on the spool valve.	Check pressures in all gears to conform before stripping down.	Check pressures in all gears to conform before stripping down.	Check oil level Clean filter	Check pressures in all gears to eliminate (a) and (b). Adjust brake band before stripping.

FAULT FINDING CHART TRANSMISSION – HYDRA-SHIFT
ENGINE SPEED 1800 rev/min – OIL TEMPERATURE 55°C (131°F) MINIMUM

DRIVE

	6	7	8	9
Symptom	When changing 2nd to 3rd, 1st is temporarily engaged – 'Underlap'.	When changing 2nd to 3rd, 4th is temporarily engaged – 'Overlap' or remains in 4th.	Selects intermediate ratio between 1st and 2nd or 3rd and 4th.	Selects intermediate ratio between 2nd and 3rd or 3rd and 4th.
Fault	Loss of sequence	Loss of sequence	Front clutch unit slipping slightly.	Rear clutch unit slipping slightly.
Possible Cause	(a) Low oil pressure (b) Leak at front muff sealing rings. (c) Excessive piston travel on rear clutch. (d) Front sequence valve out of adjustment. (if new). (e) Front Brake Piston sticking.	(a) Front sequence valve sticking or blocked (b) Front sequence valve out of adjustment. *Note:* (b) applies only if a new Sequence valve has been fitted.	(a) Low pressure (b) Excessive leakage on front unit (c) Sticking front clutch pinion	(a) Low pressure (b) Excessive leakage on rear unit. (c) Sticking rear clutch unit piston
Action	Check pressures in all gears to eliminate (a) and (b). Check brake band and retest – if still under-lapped adjust front sequence valve before stripping. (if new).	Clean front sequence valve and retest. If necessary adjust front sequence valve.	Check pressures in all gears to eliminate (a) and (b). Strip down.	Check pressures in all gears to eliminate (a) and (b). Strip down.

DIMENSIONAL DATA

Tightening Torques	Thread dia.	lb/ft.	kg/metres
Brake band cylinder bolts	$\frac{5}{16}$ in.	20	2·75
Brake band locking plate bolts	$\frac{1}{4}$ in.	9	1·25
Clutch cover-to-main-frame bolts	$\frac{1}{2}$ in.	75	10·5
Clutch cylinder to planet carrier bolt	$\frac{5}{16}$ in.	20	2·75
Diff. ring nut locking plate bolts	$\frac{5}{16}$ in.	20	2·75
Transmission pump to connection	$\frac{5}{16}$ in.	20	2·75
Diff. cap bolts	$\frac{5}{8}$ in.	120	16·5
Free-wheel housing bolts (2nd reduction)	$\frac{3}{8}$ in.	30	4·0
Front end-plate nuts	$\frac{1}{2}$ in.	75	10·5
Gearbox cover to main frame bolts	$\frac{1}{2}$ in.	75	10·5
Gearbox mounting bolts	$\frac{5}{8}$ in.	100	13·75
Pinion bearing support plate bolt	$\frac{3}{8}$ in.	30	4·00
Pinion nut	$1\frac{1}{8}$ in.	200	27·5
Planet carrier end-cover bolts	$\frac{3}{8}$ in.	30	4·00
Range unit end-plate bolt	$\frac{3}{8}$ in.	30	4·00
Rear axle case to main frame bolts	$\frac{1}{2}$ in.	75	10·5
Rear wheel nuts	$\frac{5}{8}$ in.	120	16·5
Reduction units to axle case bolts	$\frac{1}{2}$ in.	75	10·5
Support sleeve cap bolts	$\frac{1}{4}$ in.	9	1·25
Support snout bolts	$\frac{1}{4}$ in.	9	1·25
Pinion shaft bearing setting	0·002 in. (0·050 mm) preload to 0·002 in. (0·050 mm) end-float		
Crown wheel teeth backlash	0·007 – 0·009 in. (0·18 – 0·23 mm)		
Differential side bearing setting	0·002 in. (0·050 mm) pre-load to 0·002 in. (0·050 mm) end-float		
Layshaft bearing end-float	0·002 – 0·004 in. (0·05 – 0·01 mm)		
Oil pump relief valve setting	70 lb/in^2 (4·9 kg/cm^2)		
Pinion shaft setting distance	6·3125 in. (160·337 mm)		

David Brown policy is one of continuous development and improvement, and therefore the specification details may have been altered since this book went to press.

Moreover, as David Brown products are offered in a variety of forms to cover a large number of markets and applications, this manual may contain details not applicable to the component undergoing repair.

SUMMARY OF DESIGN CHANGES

Details of change	When introduced
Locating Dowels between carrier and cylinder assemblies and carrier and cover, now equally spaced on common pitch circle diameter Formerly one dowel was offset. Old and new parts are interchangeable but one dowel should be discarded.	1212/1001571 (July 1973)
Safety switch plungers changed, now same as 885/990/995 and 996 tractors.	1212/1001330 (August 1973)
Five internal serrations added to the gear lever dirt excluder K929631 to improve retention and seal	1212/1002347 (February 1974)
Blanking plate K947189 fitted over layshaft gear to reduce aeration of oil Can be fitted to earlier tractors using self tapping screws but top locking cap must be shortened by 12 mm ($\frac{1}{2}$ in) before fitting.	1212–1003002 (November 1974)
Washer K19470 added between relief valve shims and spring to prevent damage to shims and relief valve piston head reduced to 3.2 mm ($\frac{1}{8}$ in) thickness. Later parts should be used to service earlier tractors, relief valve spring and 'O' ring should also be renewed if system pressure drops.	1212/1003279 (November 1974)
Bevel pinion shaft outer locknut changed from plain nut with grub-screw to castellated nut K622805 with tension pin K623885 driven through shaft. Tighten inner nut to 28 kgm (200 lb ft) and then tighten outer nut to *4.15 kgm (30 lb ft) increasing torque until tension pin can be fitted, up to a maximum of 32.2 kgm (230 lb ft) **Note:* Revised to 4.15 kgm, was 18.2 kgm (30 lb ft was 130 lb ft). To use later locknut an earlier shaft drill two holes $\frac{3}{16}$ in diameter at 90 to each other at 25.4 mm (1 in) from shoulder.	1212/1003779 1412 Start of production (April 1975)
Hydra-Shift pressure increased to 5.27 kg/cm² (75 lb/in²) at 1500 rev/min in first gear at 45 C oil temperature Check pressure at first 500 hours service and every 1000 hours afterwards. 'O' ring and spring and reset to revised specification.	1212/1412 (November 1975)
Limited number of early 1412 tractors equipped with non-standard layshaft K946503 and high range gear K946502. Approximately 7% faster in high range only, identified by suffix 'H' on tractor serial number.	1412 (August 1975)

Other David Brown Tractors publications on transmissions are available through your DB Dealer or from Publications section, David Brown Tractors Limited, Meltham, HUDDERSFIELD, England HD7 3AR.

Service Repair Manual, section C1, Transmission, Non-Synchromesh, not 1200	9-38115
Service Repair Manual, section C2, Transmission, 4WD Transmission and Front Axle Mk I (Selene)	9-38116
Service Repair Manual, section C3, Transmission, Synchromesh, not 1210 or 1410	9-37141
● Up-dated pages 19/20	9-38159
Service Repair Manual, section C4, Transmission, 1200, 1210	9-37151
● Up-dated pages 25/27	9-38160
Service Repair Manual, section C6, 4WD Transmission and Front Axle, Mk I (Kramer)	9-37171
Service Repair Manual, section C7, 4WD Transmission and Front Axle, Mk II	9-37172
1412 tractors—included in the Preliminary Service Information section	9-38121
Instructional drawings, Synchromesh Transmission (with booklet)	9-38501
● Instructional drawing, Synchromesh Gearbox	9-38601

SYNCHROMESH TRANSMISSION

1210 and 1410
2WD and 4WD Tractors

Written In *Clear And Simple English*

CASE CORPORATION

Pub 9-37155

Printed in U.S.A.
July, 1979



WARNING: *This safety symbol is used in this manual to indicate important safety messages.*
When you see this symbol, read the message carefully. It is shown when possible injury or death can be caused.

NOTE: The CASE CORPORATION **reserves the right to make improvements in design or changes in specifications at any time without incurring any obligation to install them on units previously sold.**

CONTENTS

	Page
SPECIAL TOOLS	C3
12-SPEED GEARBOX	C11
HOW IT WORKS	C13
Gear Levers	C14
Selector assemblies	C16
Gear assemblies	C20
Transfer gearbox 4WD	C24
Differential	C25
Final drive	C25
MAINTENANCE	C27
Oil levels	C27
Oil changes	C27
Hydraulic filter, pressure, external	C28
Hydraulic filter, suction, internal	C29
REMOVAL AND INSTALLATION OF GEARBOX	C31
REMOVAL OF FINAL DRIVE UNITS	C34
DISASSEMBLY AND ASSEMBLY OF GEARBOX	C39
1210 Tractor without cab	C39
1210 Tractor with cab	C53
1410 Tractor without cab	C59
1410 Tractor with cab	C66
INSPECTION OF PARTS	C42
Selector parts	C42
Gears	C43
Bearings	C43
ADJUSTMENTS BEFORE ASSEMBLING	C44
Slow/Normal layshaft	C44
Main Layshaft clearance	C45
Topshaft Clearance	C46
Pinion Shaft Adjustment	C47

	Page
GEAR LEVERS	C72
DIFFERENTIAL 1210 TRACTOR	C73
Disassembly	C73
Assembly	C74
DIFFERENTIAL 1410 TRACTOR	C75
Disassembly	C75
Assembly	C76
ADJUSTMENTS	C77
Bearing Adjustment	C77
Tooth Clearance	C78
FINAL DRIVES	C79
Maintenance	C79
FINAL DRIVE 1210 TRACTOR	C81
Disassembly	C81
Inspection of Parts	C82
Installing Spur Pinion Shaft	C83
Installing Final Drive Shaft	C84
FINAL DRIVE 1410 TRACTOR	C86
Disassembly	C86
Inspection of Parts	C88
Installing Spur Pinion Shaft	C89
Installing Final Drive Shaft	C90
REAR AXLE OIL SEALS	C92
DRUM BRAKES 1210	C93
DISC BRAKES 1410	C95
HYDRAULIC BRAKES	C101
SPECIFICATIONS	C105

SPECIAL TOOLS

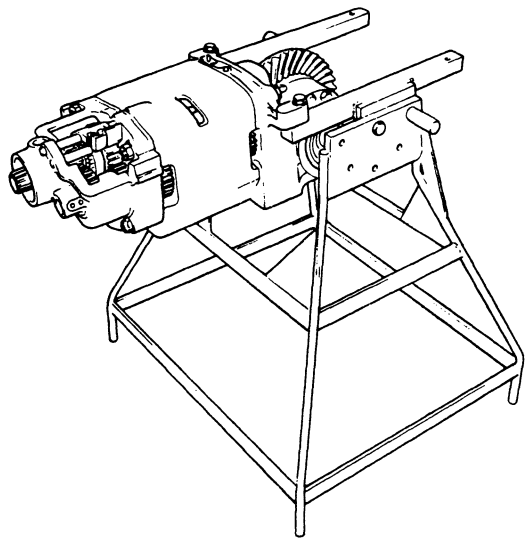

FIGURE 1. GEARBOX STAND
Made to Service Drawing Misc 1747.

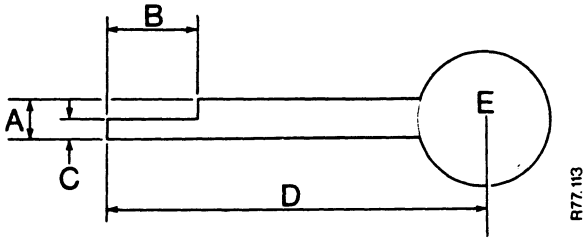

FIGURE 2
TOOL FOR INSTALLING DETENT BALLS

A. 9·5 mm (⅜ in)
B. 15·9 mm (⅝ in)
C. 4·8 mm (3/16 in)
D. 150 mm (6 in)
E. Gear lever knob

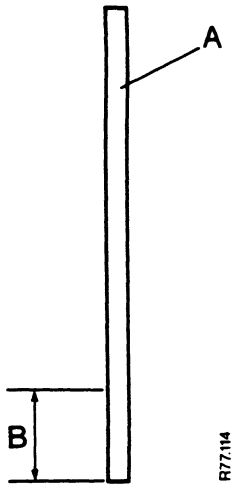

FIGURE 3
TOOL FOR CHECKING DEPTH OF DETENT SPRING HOLES

A. Round bar 9·5 mm (⅜ in) diameter
B. 28 mm (1·10 in)

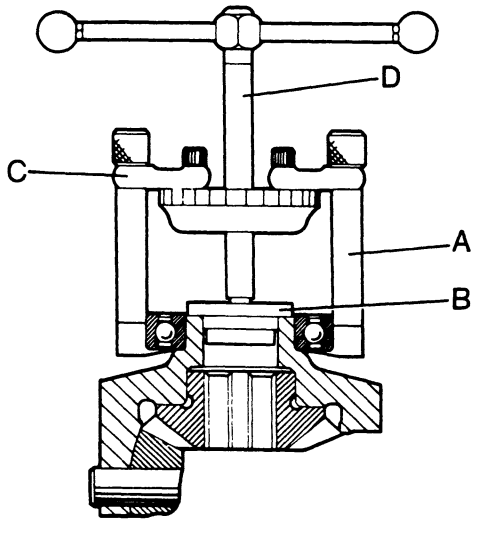

FIGURE 4. DIFFERENTIAL BEARING REMOVAL WITH 3 LEG PULLER

A. Legs
B. Thrust pad
C. Links
D. Puller bolt

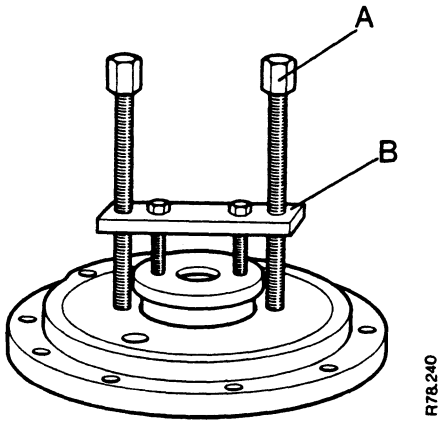

FIGURE 5. TOOL FOR REMOVING REAR AXLE OIL SEAL HOUSING

A. Tool No. 900207
B. Tool No. 900208

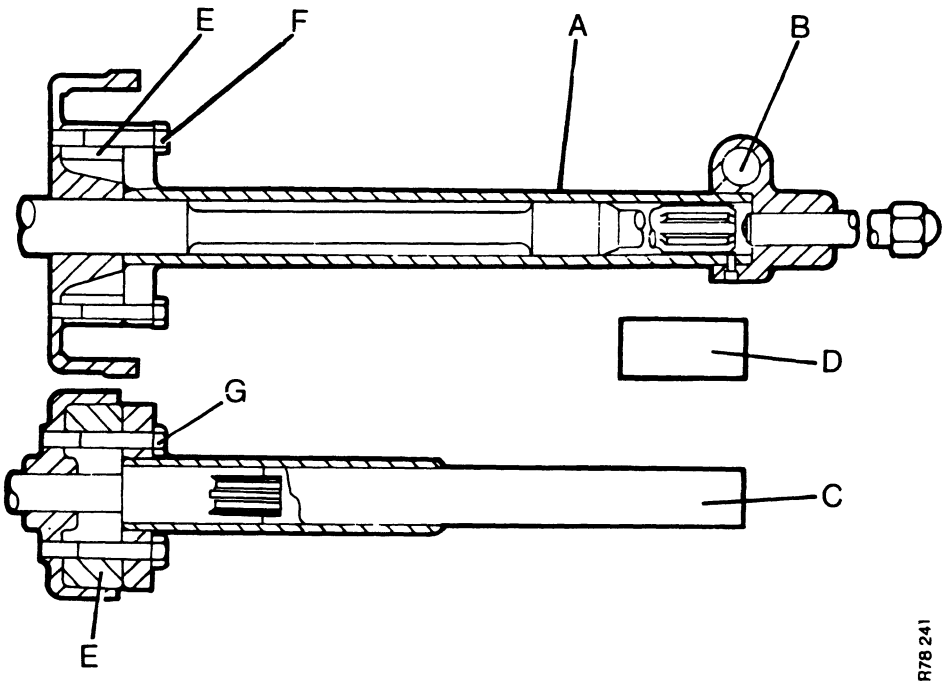

FIGURE 6. TOOL FOR REMOVING BRAKE DRUMS

A. Main tool, No. 960618
B. Large round bar (not shown)
C. & D. Two distance pieces
E. Spacer
F. Two $\frac{1}{2}$ in BSF bolts
G. Two $\frac{3}{8}$ in BSF bolts

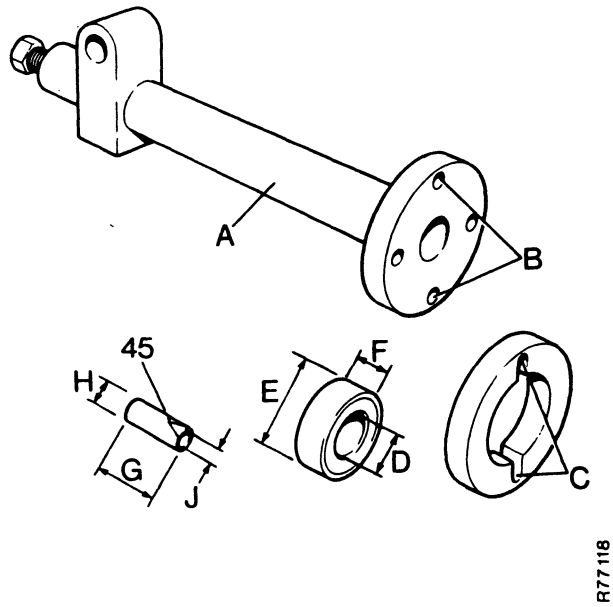

FIGURE 7. MODIFICATIONS TO BRAKE DRUM REMOVAL TOOL

A. Service tool 960618
B. Additional pair of 13·5 mm ($\frac{17}{32}$ in) dia. holes at 104·8 mm (4$\frac{1}{8}$ in) centres
C. Holes in distance piece changed to 13·5 mm ($\frac{17}{32}$ in) wide by 7·9 mm ($\frac{5}{16}$ in) deep slots
D. 47·6 mm (1$\frac{7}{8}$ in)
E. 82·5 mm (3$\frac{1}{4}$ in) } *Collar*
F. 44·5 mm (1$\frac{3}{4}$ in)
G. 88·9 mm (3$\frac{1}{2}$ in)
H. 22·2 mm ($\frac{7}{8}$ in) } *Distance tube (two needed)*
J. 14·3 mm ($\frac{9}{16}$ in)

FIGURE 8
TOOL FOR REMOVING DISC BRAKE HUB, 1410

A. 105 mm (4⅛ in) centres
B. 20 mm (¾ in)
C. 170 mm (6¾) diameter
D. 79 mm (3 3/32) diameter
E. 3·2 mm (⅛ in) recess
F. 1·6 mm (1/16 in) radius
G. 67·5 mm (2 11/12 in)
H. ½ in UNC thread

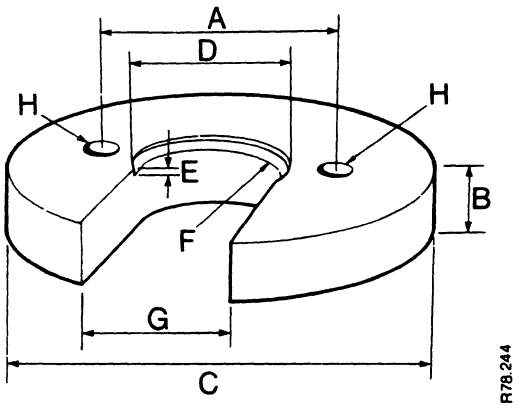

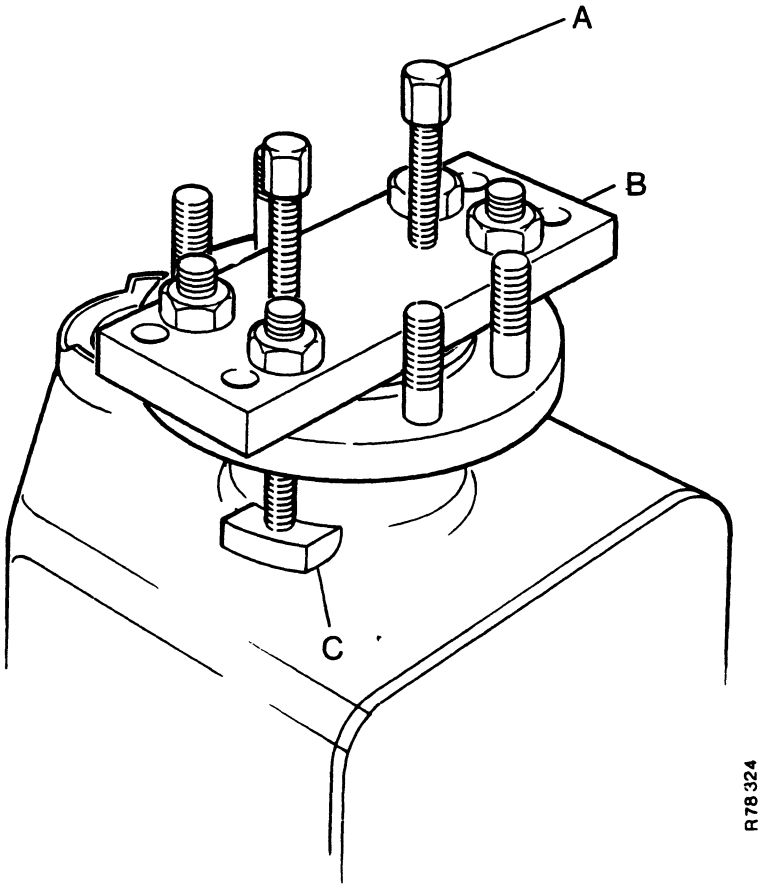

FIGURE 9. TOOL FOR REMOVING FINAL DRIVE SHAFT.
A. Bolts No. DB K900207 B. Plate C. Thrust pad

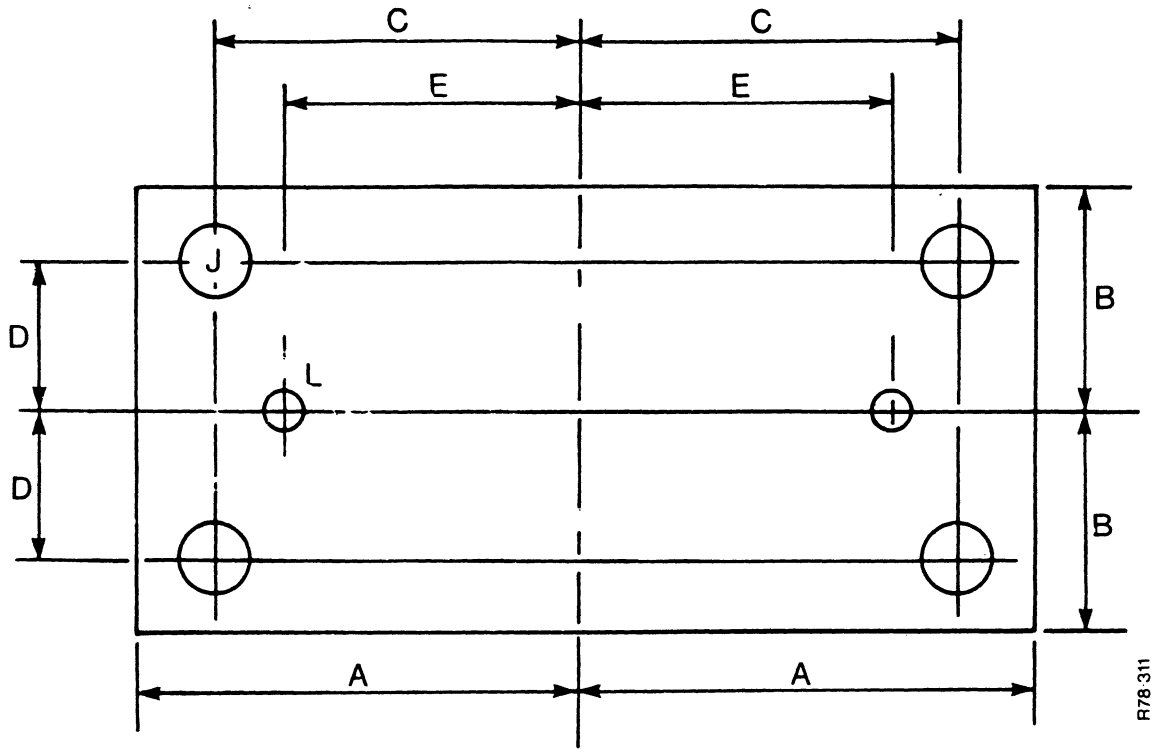

FIGURE 10. PLATE FOR REMOVING 14 SERIES TRACTOR FINAL DRIVE SHAFT

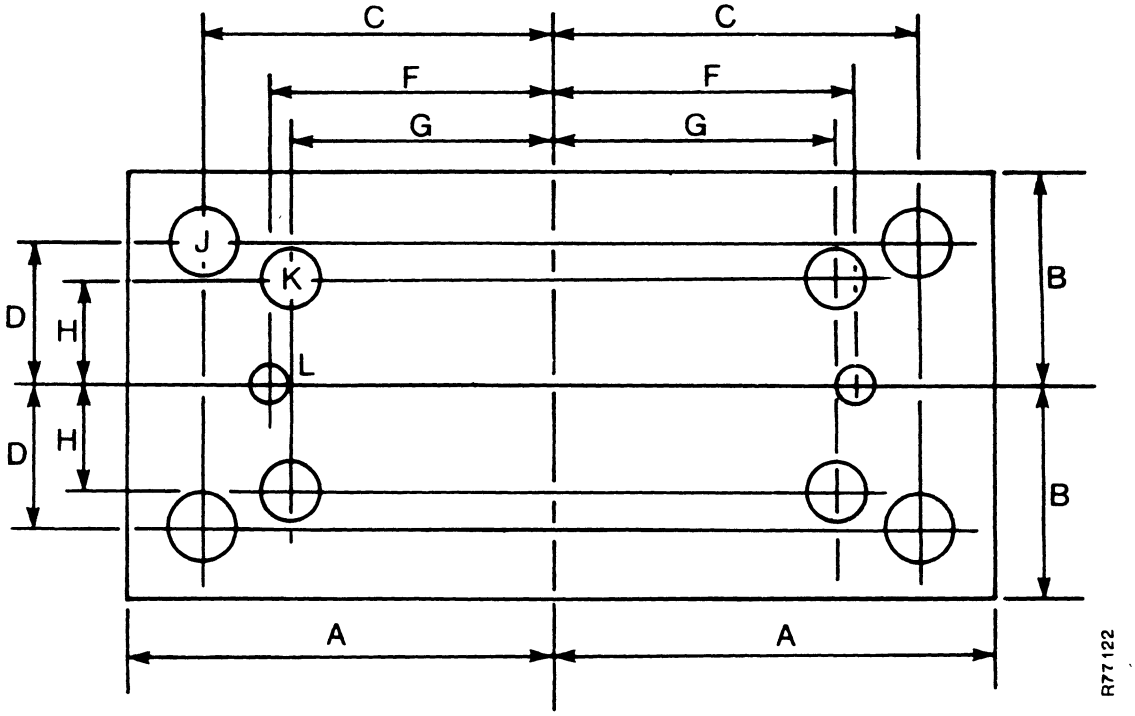

FIGURE 11. PLATE FOR REMOVING 12 SERIES TRACTOR FINAL DRIVE SHAFT

A. 114·3 mm (4½ in)
B. 57·1 mm (2¼ in)
C. 93·7 mm (3 11/16 in)
D. 38·9 mm (1 17/32 in)
E. 85·7 mm (3⅜ in)
F. 76·2 mm (3 in)
G. 70·6 mm (2 25/32 in)
H. 29·4 mm (1 5/32 in)
J. 4 holes
20·5 mm (13/16 in) diameter
K. 4 holes
17·5 mm (11/16 in) diameter
**L. 2 holes*
11·1 mm (7/16 in) diameter and tap ½-16BSF

* NOTE: If BSF taps are not available, cut thread to the same thread as bolts, minimum 20 mm (½ in) diameter.

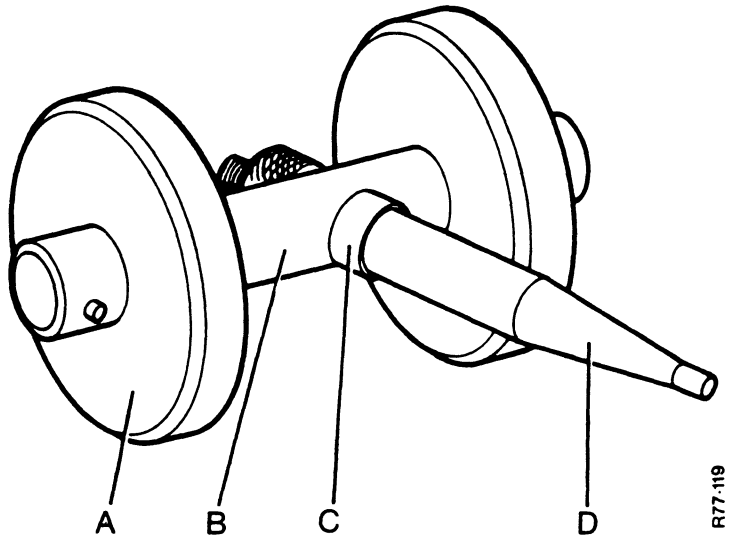

FIGURE 12. PINION SETTING GAUGE
(Service Tool DB 8208)

A. Disc
B. Shaft
C. Spacer
D. Probe

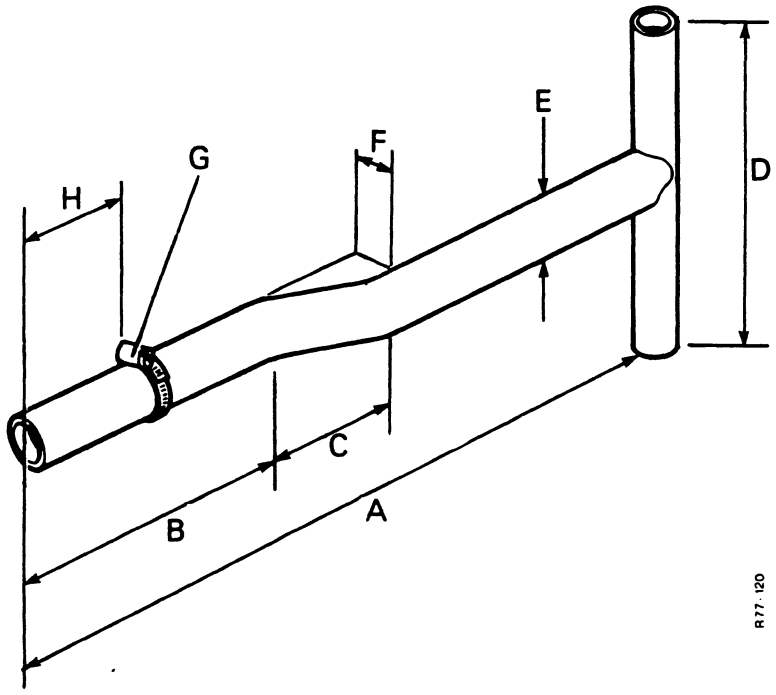

FIGURE 13. TOOL FOR INSTALLING DIFFERENTIAL LOCK SLEEVE

A. 609·6 mm (24 in)
B. 228·6 mm (9 in)
C. 101·6 mm (4 in)
D. 304·8 mm (12 in)
E. 38·1 mm (1½ in)
F. 25·4 mm (1 in)
G. Hose clip
H. 103·2 mm (4 1/16 in)

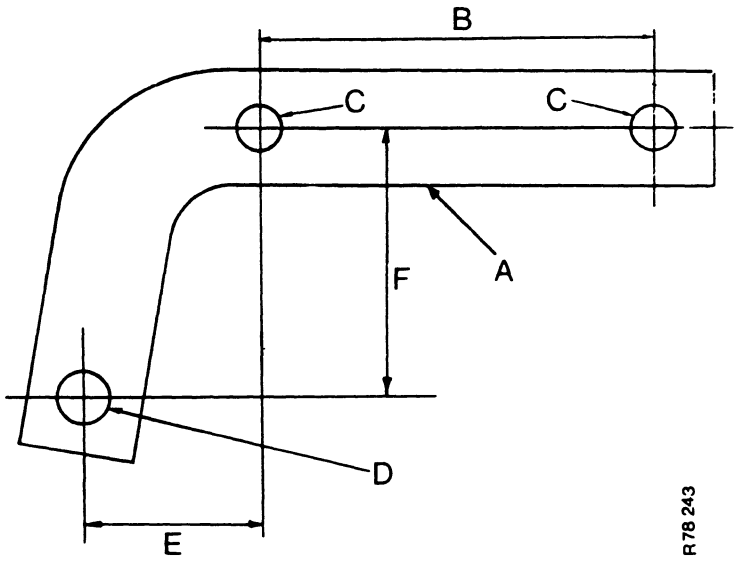

FIGURE 14. LIFTING BRACKET FOR FINAL DRIVE UNIT ON 14 SERIES TRACTORS

A. Mild steel bar, 40× 13 mm (1½ × ½ in)
B. 127 mm (5 in)
C. 16·7 mm (21/32 in) diameter holes
D. Drill and cut thread to install eye bolt for lifting
E. 54 mm (2⅛ in)
F. 89 mm (3½ in)

TWELVE SPEED GEARBOX

INTRODUCTION

The information in this section of the Repair Manual is for 1410 tractors and 1210 tractors made after 1975. For 1210 tractors made before 1975, see section C4, Transmission — Synchromesh Gearbox 1200 and 1210 tractors.

For information for 1210 Power-Shift, 1212 and 1412 tractors, see section C5. Transmission — Hydra-Shift.

For parts information, see publication 9-39052 for 1210 tractors, or 9-39102 for 1410 tractors, or any revisions of these.

The information given in this section includes the final drive reductions and brakes installed on these models.

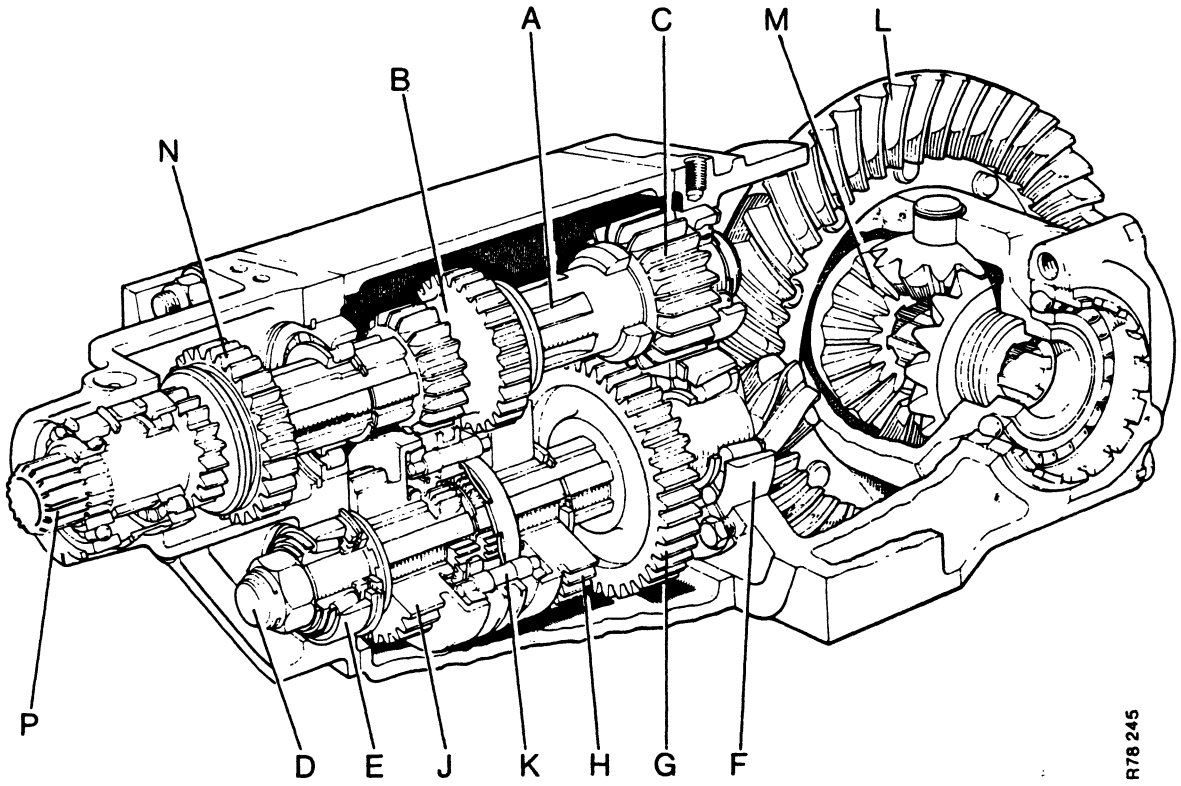

FIGURE 15. TWELVE-SPEED SYNCHROMESH GEARBOX FOR 1210 TRACTOR

A. Topshaft
B. High/Low range pinion
C. Reverse idler gear
D. Pinion shaft
E. Front bearing
F. Rear bearing
G. First/Reverse gear
H. Second gear
J. Third gear
K. Synchroniser unit
L. Spiral gear
M. Differential
N. Slow/Normal driven gear
P. Slow/Normal driving gear

NOTE: Layshafts are not shown to permit main gears and shafts to be seen.

HOW IT WORKS

GENERAL

The 1210 and 1410 gearboxes are of similar design and construction, but use different components. Do not use 1210 parts for the 1410 gearbox. Do not use 1410 parts for the 1210 gearbox.

The gearbox case has three main parts:

(a) Front end plate.
(b) Spacer.
(c) Rear end plate (differential housing).

The gearbox is held in position in the rear end of the main frame by two bolts D Figure 16.

The bolts are tightened on to two bushes E through the gearbox lugs. A clearance is permitted between the bushes and the lugs and the lugs and the bolt heads. This permits the gearbox to move a small amount vertically and horizontally for alignment purposes. For clearances see Data at the end of the section.

A muff coupling is used to connect the clutch drive shaft to the slow/normal range driving gear. Circlips hold the coupling in position.

On 4 Wheel-drive tractors another muff coupling connects the transfer gearbox to the pinion shaft of the gearbox. This coupling is held in position by a bolt.

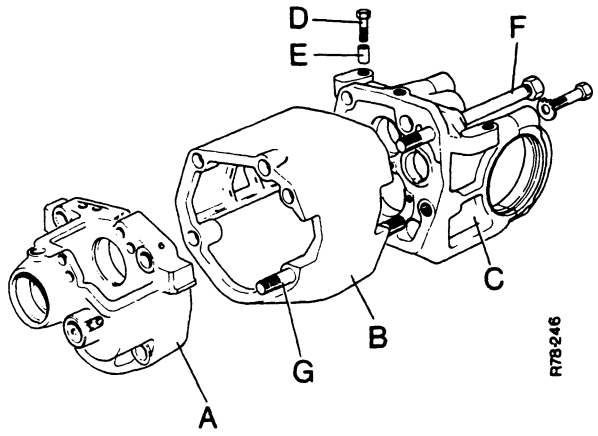

FIGURE 16. GEARBOX CASING PARTS

A. Front end plate
B. Spacer
C. Rear end plate
D. Bolt, gearbox to frame
E. Bush
F. Top casing bolt
G. Bottom casing stud

GEAR LEVERS

On tractors with a cab, three levers control the gearbox, see Figure 17.

These are:

(a) Slow/Normal range, lever F.
(b) High/Low range, lever G.
(c) 1, 2, 3 and Reverse, lever E.

Selection of slow, normal, high, low, first and reverse must be made with the tractor stopped. Gear changes from first to second, second to third and third to second can be made while moving.

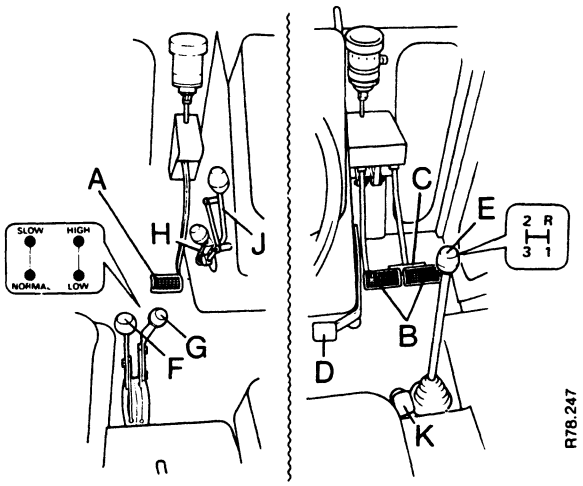

FIGURE 17. LEVERS AND PEDALS TRACTORS WITH A CAB

A. Clutch pedal
B. Brake pedals
C. Locking bar
D. Foot throttle
E. Gear lever
F and G. Range levers
H. Engine stop control
J. Hand throttle
K. Differential lock

A small lever is installed at the front of the seat, for the selection of 4-wheel drive. With the lever to the left 4-wheel drive is engaged through the transfer gearbox to the front axle.

Selection of 4-wheel drive must be made with the tractor moving and little or no load on the transmission.

Do not select 4-wheel drive if either of the rear wheels has a loss of traction.

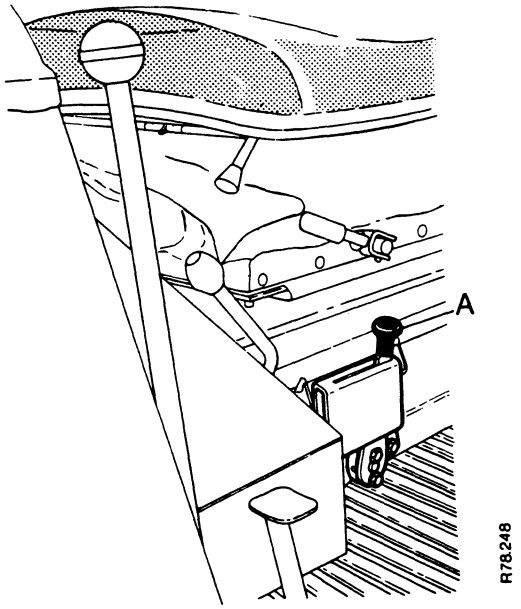

FIGURE 18. 4WD CONTROL LEVER TRACTOR WITH A CAB

A. Engaged position

On tractors without a cab, a single lever controls both Slow/Normal and High/Low.

The lever has a centre position for neutral which is used for stationary PTO work.

The lever on the right is used to select first, second, third and reverse gears.

Selection of slow, normal, high, low, first and reverse must be made with the tractor stopped.

Gear changes from first to second, second to third and third to second can be made while moving.

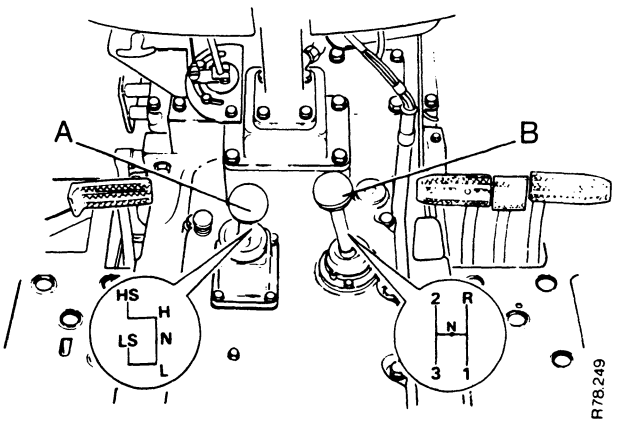

FIGURE 19. 1410 GEAR LEVERS

A. Range lever *B. Gear Lever*

A small lever next to the clutch pedal is used for the selection of 4-wheel drive. With the lever up, 4-wheel drive is engaged through the transfer gearbox to the front axle.

Selection of 4-wheel drive must be made with the tractor moving, and little or no load on the transmission. Do not select 4-wheel drive if either of the rear wheels has a loss of traction.

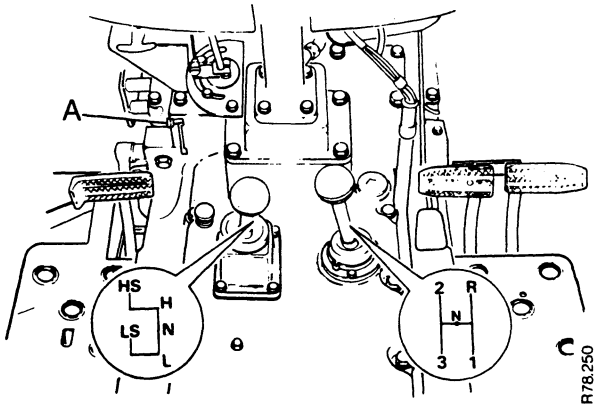

FIGURE 20. 4WD CONTROL LEVER TRACTORS WITHOUT A CAB

A. Engaged position

SELECTOR ASSEMBLIES

Selector Rods, Forks and Jaws

The selector assemblies have a different arrangement in the gearbox on a tractor with a cab, to one without. This makes assembly and disassembly of the gearbox different for each model. See Figures 22 and 23.

The gearbox has four selector rods each with a fork and jaw fastened to it by pins.

The four assemblies are used as follows:

(a) Slow/Normal
(b) High/Low
(c) First/Reverse
(d) Second/Third

Each rod has three grooves across it at one end. When the rod is moved to one of three positions the detent ball enters one of the grooves. A spring holds the ball in the groove, which holds the rod in the selected position. The centre groove is used for the neutral position.

To prevent two gears being selected at the same time gear locks are installed. The gear locks are installed in the front end plate between selector rods for all gears except Slow/Normal.

When a selector rod is moved, it pushes the lock into a groove in the rod next to it. This prevents the other rod from moving at the same time, see Figure 21.

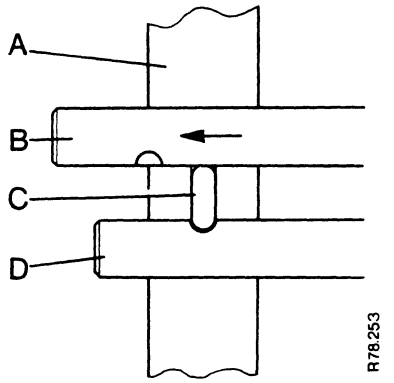

FIGURE 21. GEAR LOCK METHOD

A. Front end plate
B. Selector rod
C. Gear lock plunger
D. Stationary selector rod

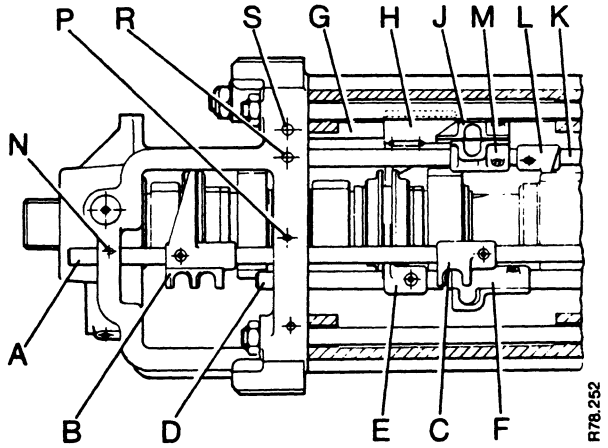

FIGURE 22. SELECTORS ON A TRACTOR WITH A CAB

A. Slow/Normal rod
B. Slow/Normal fork
C. Slow/Normal jaw
D. High/Low rod
E. High/Low fork
F. High/Low jaw
G. 2nd/3rd rod
H. 2nd/3rd fork
J. 2nd/3rd jaw
K. 1st/Rev. rod
L. 1st/Rev. fork
M. 1st/Rev. jaw
N. Slow/Normal detent ball hole
P. High/Low detent ball hole
R. First/Reverse detent ball hole
S. Second/Third detent ball hole

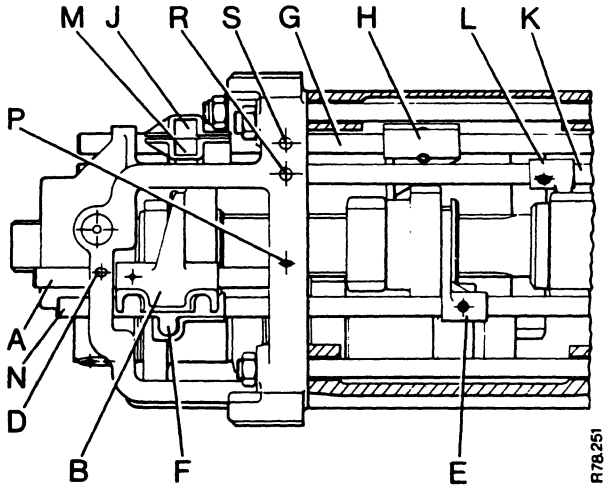

FIGURE 23. SELECTORS ON A TRACTOR WITHOUT A CAB

A. Slow/Normal rod
B. Slow/Normal fork and jaw
D. High/Low rod
E. High/Low fork
F. High/Low jaw
G. 2nd/3rd rod
H. 2nd/3rd fork
J. 2nd/3rd jaw
K. 1st/Rev. rod
L. 1st/Rev. fork
M. 1st/Rev. jaw
N. Slow/Normal detent ball hole
P. High/Low detent ball hole
R. First/Reverse detent ball hole
S. Second/Third detent ball hole

Gears and Dog Clutch

Selection of slow or normal on the 1210 gearbox is made by moving the slow/normal driven gear. On the 1410 gearbox the driven gear is permanently engaged with the slow/normal layshaft. Selection is made by a dog clutch.

Selection of high or low on the 1210 gearbox is made by moving the high/low pinion.

On the 1410 gearbox the gears for high and low are permanently engaged with the main layshaft. The range is selected by a dog clutch, see Figure 24.

A torque lock principle is used to help prevent gears disengaging. The following method is used for the first/reverse gear on the bevel pinion shaft. It is also used for the range pinion in the gearbox of the 1210 tractor.

The width of the shaft splines are reduced on the drive side where a gear is engaged. When drive is applied to the gear the gear turns a small amount on the shaft. This puts the splines of the shaft and the gear out of alignment. The gear cannot move along the shaft and is kept engaged.

A similar method is used on dog clutch gears. The teeth of the gears are reduced in width for part of the length on both sides. When drive is applied, the teeth of the gear and selector gear move out of alignment. The selector cannot move and the gear is kept engaged.

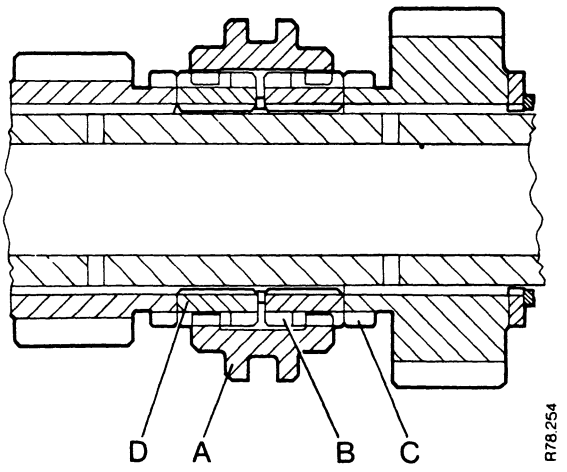

FIGURE 24. DOG CLUTCH ASSEMBLY (1410)

A. Dog clutch
B. Reduced part of tooth, on dog gear
C. Dog teeth on gear
D. Dog gear

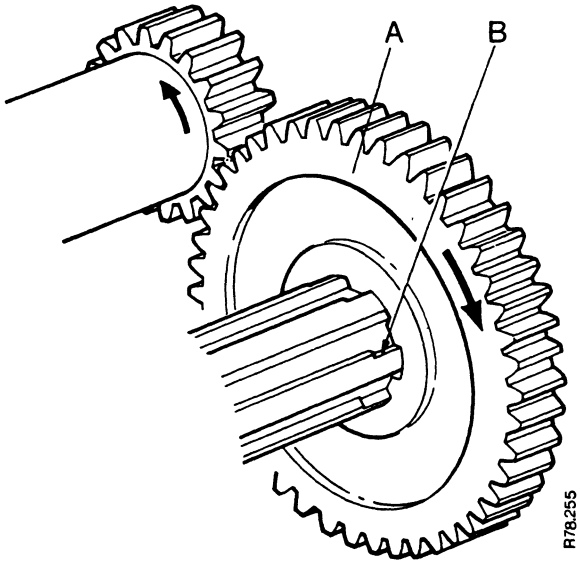

FIGURE 25. TORQUE LOCK PRINCIPLE

A. Sliding gear
B. Reduced part of splines on shaft

Synchroniser Unit

The synchroniser unit has three main parts: See Figure 26.

(a) A selector assembly
(b) Two dog clutch gears

The selector assembly has two cone rings G which are fastened to three special pins H.

The pins are free to slide through holes in the selector gear F.

The selector gear has two sets of teeth on the inside bore. These engage with the outside teeth of the two dog clutch gears. The dog clutch gears are engaged with the pinion shaft by splines.

When the selector fork moves the selector assembly, a cone ring moves against the cup of a gear. The cone rings have a molybdenum surface.

This surface is hard and rough which prevents seizure and removes oil from the surface rapidly.

NOTE: When doing gearbox repairs, make sure this surface has protection from damage.

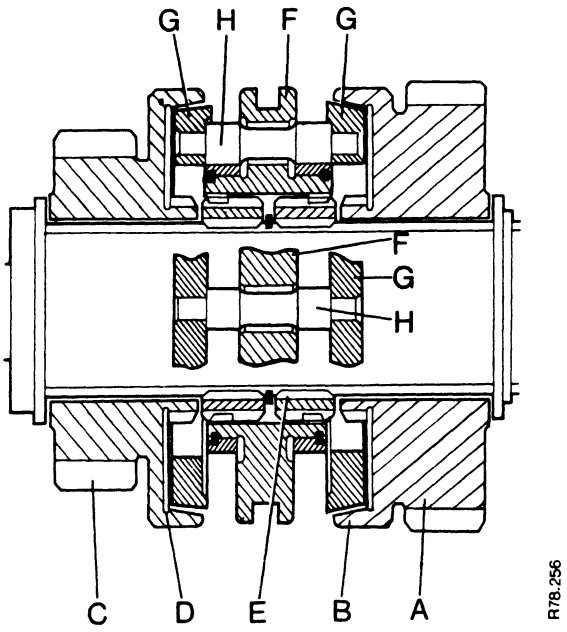

FIGURE 26. SYNCHRONISER UNIT IN NEUTRAL

A. Second gear
B. Second gear cup
C. Third gear
D. Third gear cup
E. Dog clutch gear
F. Selector gear
G. Cone rings
H. Special pins

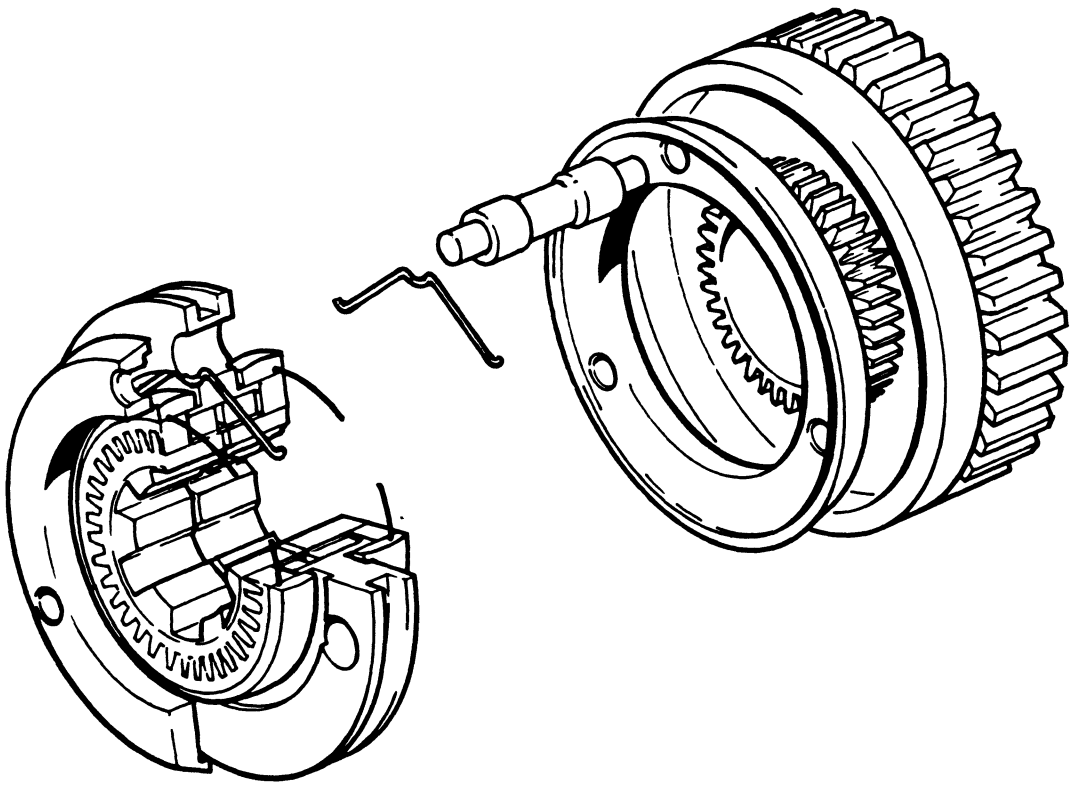

FIGURE 27. SYNCHRONISER UNIT

When the selector assembly is in the centre position both second and third gears are free.

When a gear is selected:

(a) the selector assembly is moved toward one of the gears.

(b) the cone ring comes in contact with the cup of the gear.

(c) the cone ring is gradually rotated by the gear.

(d) the selector assembly is rotated by the pins which move out of alignment with the holes.

(e) when the speed of the selector and the gear are the same the pins align with the holes. This is done by springs at each end of the pins.

(f) the selector slides over the pins and the inside teeth of the selector engage with the dog teeth of the gear. The selector gear is held in engagement by the reduced part of the dog clutch gear teeth. See page 17 for more detail of this.

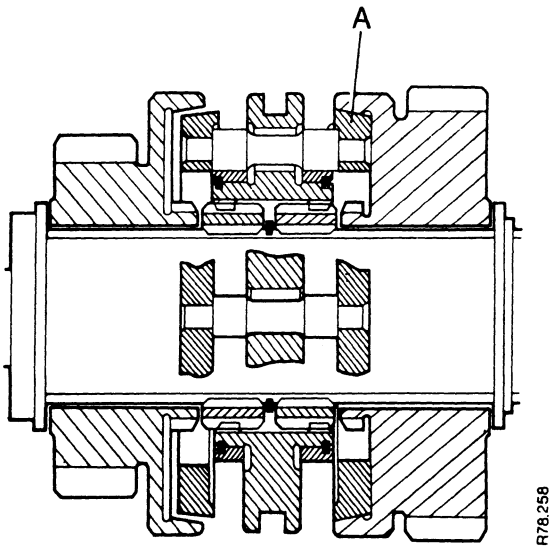

FIGURE 28. CONE RING CONTACT

A. Cone ring making contact with gear cup

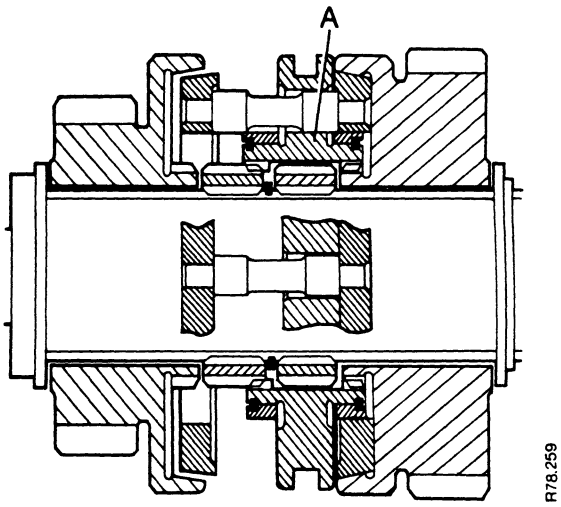

FIGURE 29. GEAR ENGAGEMENT

A. Selector gear engaged with second gear dog teeth

GEAR ASSEMBLIES

Slow/Normal

The Slow/Normal gear assembly is installed in the front end plate. It has four gears, two of these are on a common layshaft. The Layshaft is hollow and runs on needle roller bearings on a stationary spindle.

The clutch driveshaft is connected to the driving gear which has 18 teeth. The driving gear is permanently engaged with the gear with 26 teeth on the layshaft.

When SLOW is selected, the driven gear on the gearbox topshaft is moved toward the rear. The driven gear which has 28 teeth is engaged with the gear with 16 teeth on the layshaft. The driven gear is engaged to the topshaft splines.

When NORMAL is selected, the driven gear is moved forward along the topshaft. The teeth on the inside of the driven gear engage with the dog teeth on the driving gear. This gives a direct drive to the topshaft without a reduction.

NOTE: The explanation of the operation is for the 1210 gearbox. The 1410 gearbox has a dog clutch for engaging the range. The driven and driving gears are permanently engaged with the layshaft gears. See Figure 30.

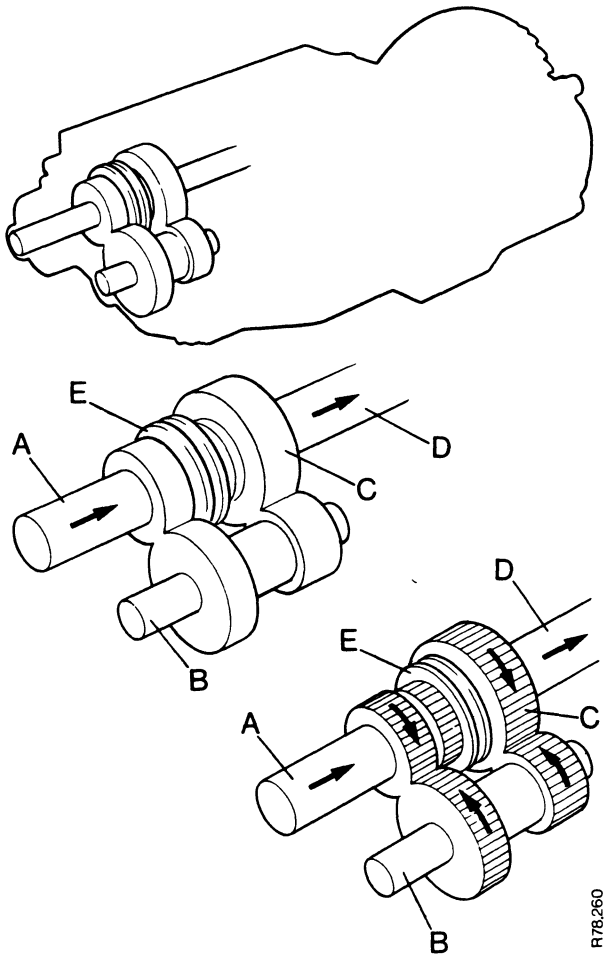

FIGURE 30. SLOW AND NORMAL RANGES

A. Drive gear assembly
B. Slow/Normal layshaft
C. Driven gear with 28 teeth
D. Top shaft
E. Dog clutch (14 series only)

NOTE: On 1210 gearbox gear C slides on the topshaft.

High/Low

The High/Low gear assembly is installed inside the spacer part of the gearbox. It has four gears, two on the topshaft and two on the layshaft.

When HIGH is selected, the range pinion is moved toward the rear along the splines of the topshaft. The gear with 26 teeth on the range pinion engages with the gear with 21 teeth on the layshaft.

When LOW is selected, the range pinion is moved forward along the topshaft. The gear with 18 teeth engages with the gear with 29 teeth on the layshaft.

NOTE: This explanation is for the 1210 gearbox. The 1410 gearbox has a dog clutch for selecting the range. The gears on the topshaft are permanently engaged with the main layshaft gears. See Figure 31.

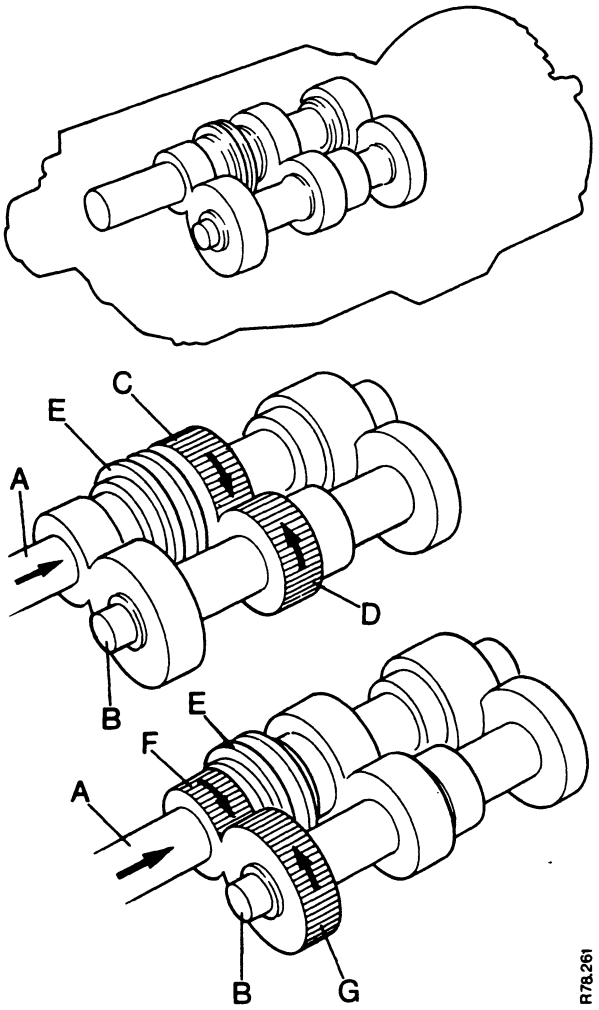

FIGURE 31. HIGH AND LOW RANGES

A. Topshaft
B. Layshaft
C. Gear with 26 teeth
D. Gear with 21 teeth
E. Dog clutch (14 series)
F. Gear with 18 teeth
G. Gear with 29 teeth

First Gear

The drive through the Slow/Normal and High/Low gear assemblies goes to the main layshaft.

With the gear lever in position 1, the gear with 41 teeth on the bevel pinion shaft is engaged with the gear with 15 teeth on the layshaft.

Reverse Gear

With the lever in the R position, the gear with 41 teeth on the bevel pinion shaft is engaged with the idler gear with 22 teeth on the topshaft. The idler gear is free to rotate on the topshaft. The idler gear is permanently engaged with the gear on the layshaft which has 25 teeth.

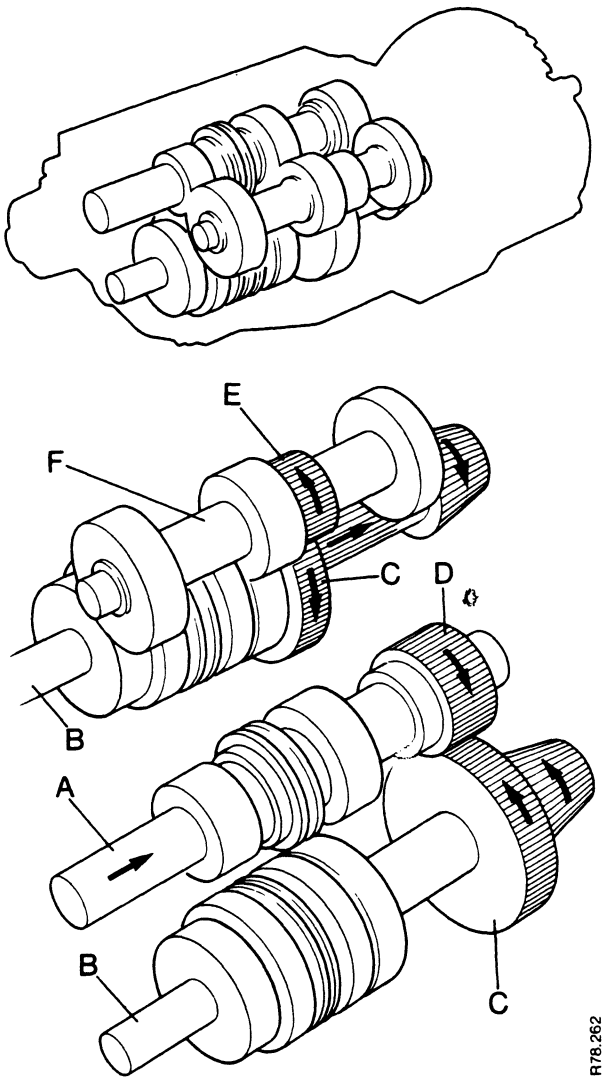

FIGURE 32. FIRST AND REVERSE GEAR DRIVE TRAINS

A. Topshaft
B. Bevel pinion shaft
C. Gear with 41 teeth
D. Idler gear with 22 teeth
E. Gear with 15 teeth
F. Layshaft

Second Gear

With the lever in position 2, the gear with 35 teeth on the bevel pinion shaft is engaged. The gear is always engaged with the gear with 21 teeth on the layshaft. Selection is made by moving the synchroniser gear rearward.

Third Gear

With the lever in position 3, the gear with 28 teeth on the bevel pinion shaft is engaged. This gear is always engaged with the gear with 29 teeth on the layshaft. Selection is made by moving the synchroniser gear forward.

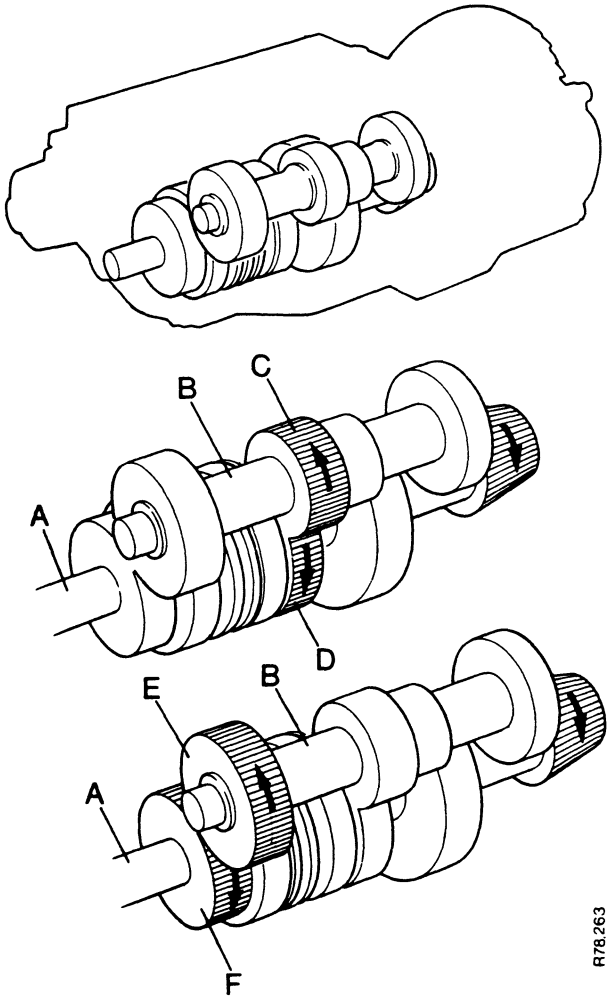

FIGURE 33. SECOND AND THIRD GEAR DRIVE TRAINS

A. Bevel pinion shaft
B. Layshaft
C. Gear with 21 teeth
D. Gear with 35 teeth
E. Gear with 29 teeth
F. Gear with 28 teeth

TRANSFER GEARBOX: 4WD Tractors

The drive gear of the transfer gearbox is connected to the gearbox bevel pinion shaft by a muff coupling. The muff coupling is held in position by a bolt and nut. The muff coupling is connected to the drive gear and pinion shaft by splines.

The drive gear which has 22 teeth is permanently engaged with an intermediate gear which has 25 teeth.

The intermediate gear is permanently engaged with the driven gear which has 40 teeth.

When 4-wheel drive is selected, a sliding dog clutch connects the driven gear to the output shaft. The output shaft is connected to the front axle differential by a drive shaft.

The transfer gearbox uses the same oil as the main gearbox. It has a drain plug, and is filled when the main gearbox is filled.

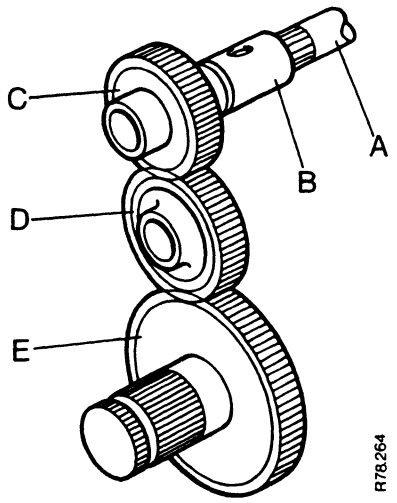

FIGURE 34. TRANSFER GEARBOX DRIVE TRAIN

A. Gearbox pinion shaft
B. Muff coupling
C. Drive gear
D. Intermediate gear
E. Driven gear and shaft

DIFFERENTIAL UNIT

The bevel pinion shaft is the output shaft of the gearbox. The pinion is engaged with the spiral gear of the differential unit.

The pinion on the 1210 has 7 teeth and the spiral gear has 43 teeth.

The pinion on the 1410 tractor has 8 teeth and the spiral gear 41 teeth.

The spiral gear is fastened to the differential housing. Inside the housing are two bevel pinions on the 1210 and four bevel pinions on the 1410 tractor. The bevel pinions rotate on shafts fastened to the housing and the complete assembly rotates with the spiral gear.

The bevel pinions are permanently engaged with two bevel wheels. These are connected by splines to the spur pinion shafts of the final drives.

The differential unit permits each road wheel to rotate at a different speed when turning a corner.

The differential lock connects the right-hand drive shaft to the differential housing. This stops the differential function and the road wheels can only turn at the same speed.

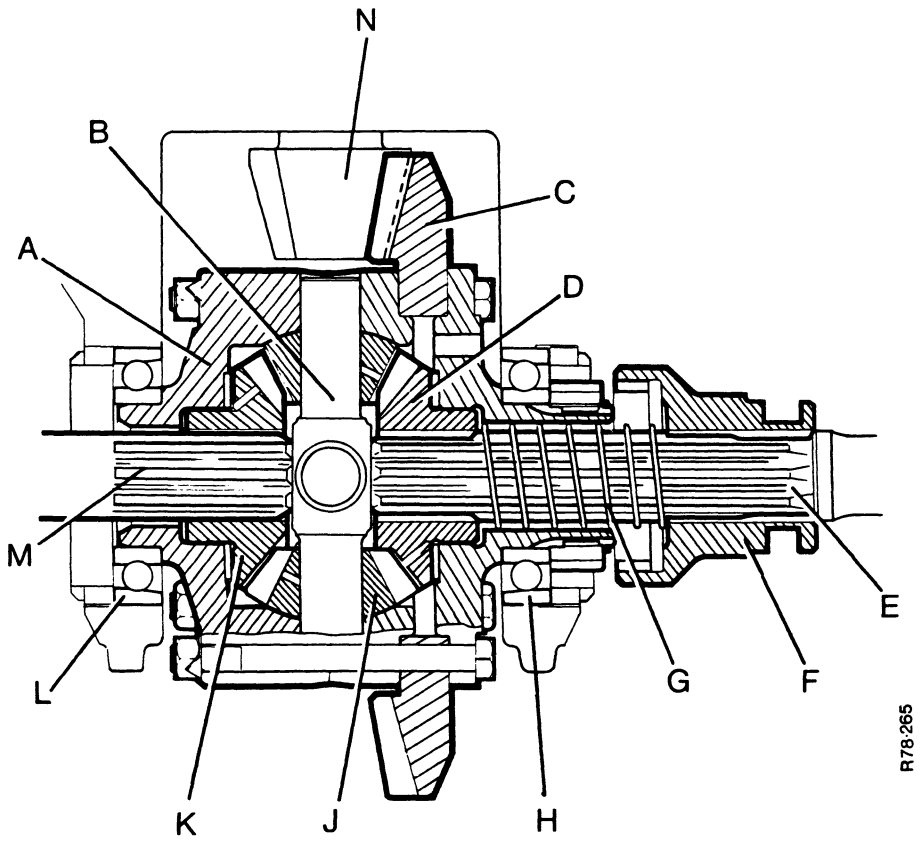

FIGURE 35. DIFFERENTIAL UNIT: 1410 TRACTOR

A. Housing
B. Spider
C. Spiral gear
D. Bevel wheel
E. Spur-pinion shaft
F. Diff-lock sleeve
G. Ball bearing
H. Bearing
J. Bevel pinion
K. Bevel wheel
L. Bearing
M. Spur-pinion shaft
N. Bevel pinion shaft

FINAL DRIVE UNIT

The spur pinion shaft splines are engaged permanently with the bevel wheels of the differential unit.

The spur pinion shafts have a small pinion at the final drive end which is permanently engaged with the spur wheel.

The spur wheels are connected to the final drive shafts by splines. The rear wheels are fastened to the flanges of the drive shafts by bolts and nuts.

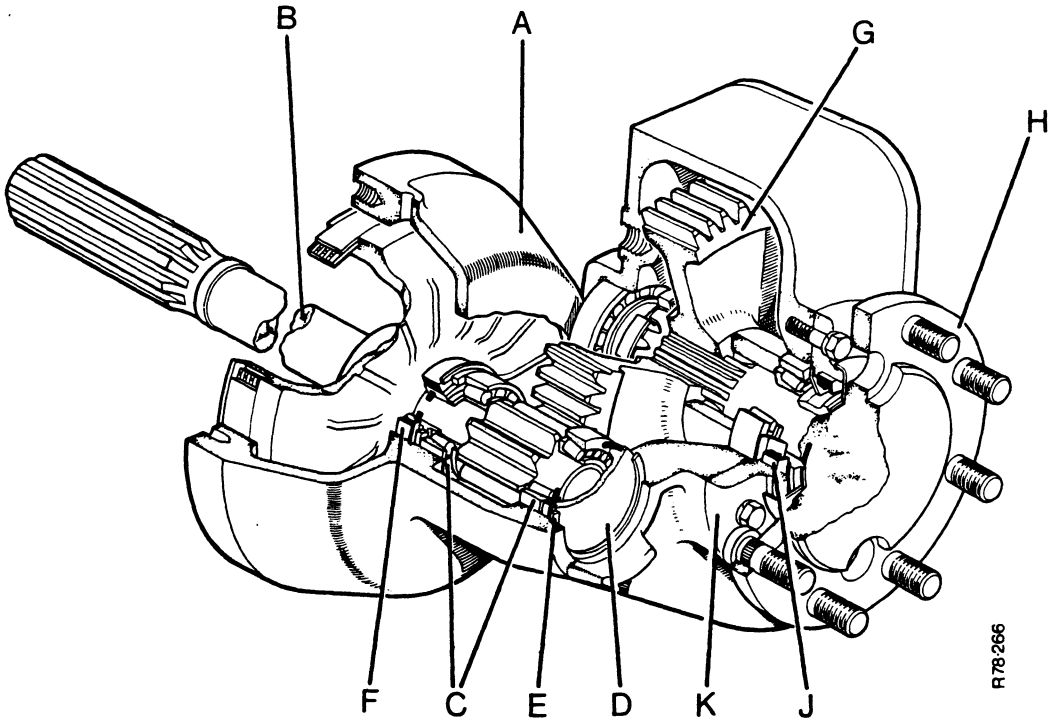

FIGURE 36. FINAL DRIVE UNIT: 1210 TRACTOR

A. Case
B. Spur-pinion shaft
C. Roller bearings
D. Cover
E. Circlip
F. Oil seal
G. Spur wheel
H. Final driveshaft
J. Oil seal
K. Seal housing

MAINTENANCE

OIL LEVEL

Check the level of the oil in the gearbox every 60 hours or each week.

IMPORTANT: Always clean around filler plugs and the dipstick before removing. Dirt must not enter the gearbox.

1. On tractors which have a cab, a sight glass is installed in the left-hand side of the main frame. See Figure 37 item A.

   The oil level must be at least half way up the glass. Add oil to this level if necessary through the filler plug on the side of the PTO casing. See Figure 37 item B.

2. On tractors without a cab a dipstick is installed in the gearbox cover. See Figure 38 item B. The oil level must be between the two marks on the bottom of the dipstick. Add oil through the filler plug on the right-hand side of the cover if necessary.

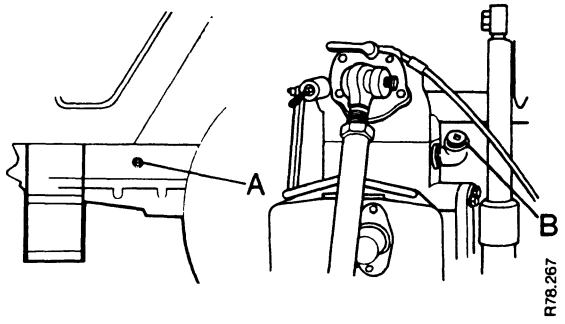

FIGURE 37. TRACTOR WITH CAB

A. Sight glass for level *B. Filler plug on PTO housing*

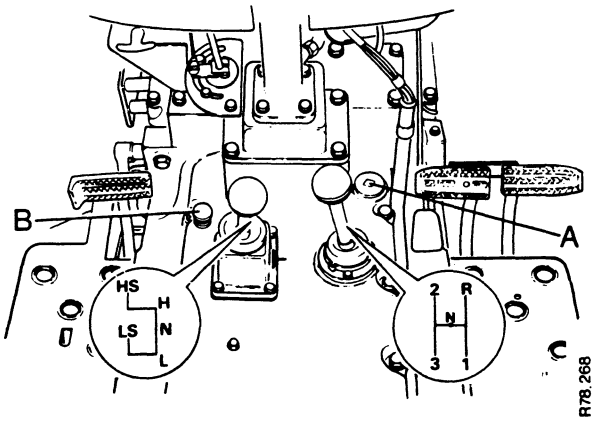

FIGURE 38. TRACTOR WITHOUT CAB

A. Filler plug *B. Dipstick*

OIL CHANGES

Change the oil in the gearbox at the first 50/100 hours service and every 500 hours or every six months. Install a new element in the hydraulic filter at the same time.

NOTE: It is a recommendation that the oil is drained when warm, after the tractor has been used.

IMPORTANT: Use clean containers when doing this job. The hydraulic system uses the same oil and the components are made to fine tolerances. Dirt **MUST NOT** enter the gearbox. Always clean around the filler and drain plugs before removing.

1. Put a container of at least 45 litres capacity under the transmission drain plugs. See Figure 39.
2. Remove the drain plugs from the axle case, filter housing, and transfer box on 4-wheel drive tractors. Install the plugs when the oil has stopped flowing.
3. Remove the paper element from the hydraulic oil filter and destroy. See procedure pages 28 and 29.

   Install a new paper element.
4. Fill the gearbox to the correct level with the correct grade of oil. Install and tighten the filler plug.

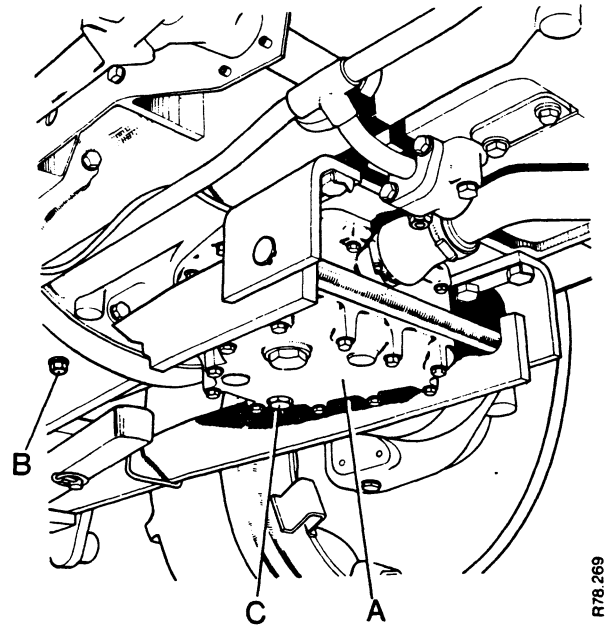

FIGURE 39. DRAIN PLUGS

A. Suction filter *C. Gearbox drain plug*
B. Rear axle drain plug

45 litres = 10 gal = 48 U.S. qt

EXTERNAL HYDRAULIC FILTER

Installed from serial numbers: 1210, 11152617; 1410, 11200753.

To change the filter element use the following procedure.

1. Clean around the outside of the filter.
2. Use a $1\frac{5}{16}$ AF spanner to remove the filter bowl which has an hexagon A Figure 40 on the bottom.

   Turn the bowl counterclockwise.
3. Remove the clip B, (if used), from the bowl. Remove the element and destroy.
4. Wash the inside of the bowl with clean fuel oil and install a new element. DO NOT use a cloth for cleaning.
5. Use a tool which has a sharp point to remove the "O" ring and back up ring. Install new "O" ring and back up ring in that sequence into the filter body. Make sure the rings are in the correct position and correctly installed.

   NOTE: Install a back up ring on all filters when replacing element.
6. Put a small amount of grease on the top edge of the bowl and on the rings.
7. Install a new element, with the flat face up, into the bowl. Fit the retaining clip (if used). Install bowl to filter body.

NOTE: The clip B is not installed on later tractors. Some tractors do not have a back-up ring installed. A new type back-up ring was installed from the following serial numbers: 1210, 11157412; 1410, 11202961.

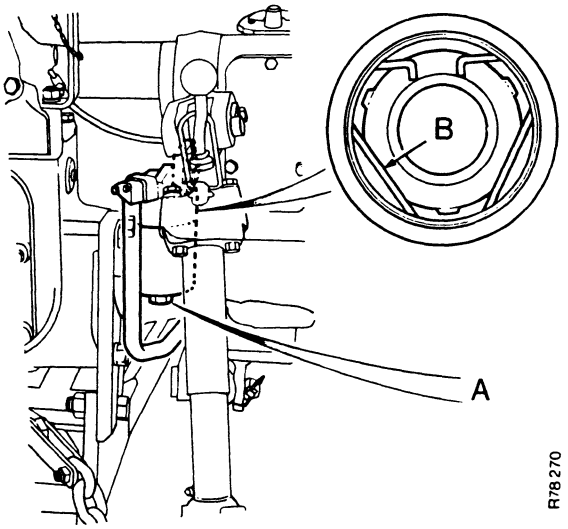

FIGURE 40. FILTER POSITION

A. Bowl hexagon *B. Element retainer clip*

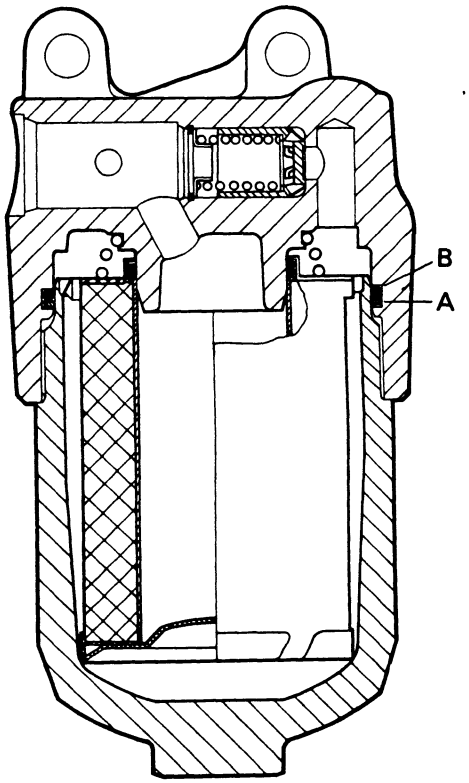

FIGURE 41. EXTERNAL HYDRAULIC FILTER

A. Back-up ring *B. "O" ring*

INTERNAL SUCTION FILTER

1. Remove the ten screws G which fasten the filter housing to the main frame.
2. Loosen the hose clip H which connects the filter housing to the inlet pipe.
3. Remove the filter housing F from the main frame.
4. Remove the filter cover B, valve and screen C, and paper element D from the housing.
5. Destroy the paper element D. Clean all other components in new fuel oil. Clean magnet J.

   Remove the cover K from the housing F. Install a new gasket and 'O' ring when assembling.
6. Assemble the filter, use a new paper element and 'O' rings.
7. Remove the old gasket from the main frame and housing faces.
8. Install the housing with a new gasket.

IMPORTANT: Make sure the paper element is installed without damage.

NOTE: The paper element was replaced by a screen when the pressure filter was installed.

Clean the screen with clean fuel oil and dry with compressed air. Install a new 'O' ring P when assembling.

Items B, C and J Figure 42 were not fitted from the serial numbers shown.

The changes were made at the following serial numbers:

1210: 11152576; 1410: 11200752;
1210Q: 11152617; 1410Q: 11200753

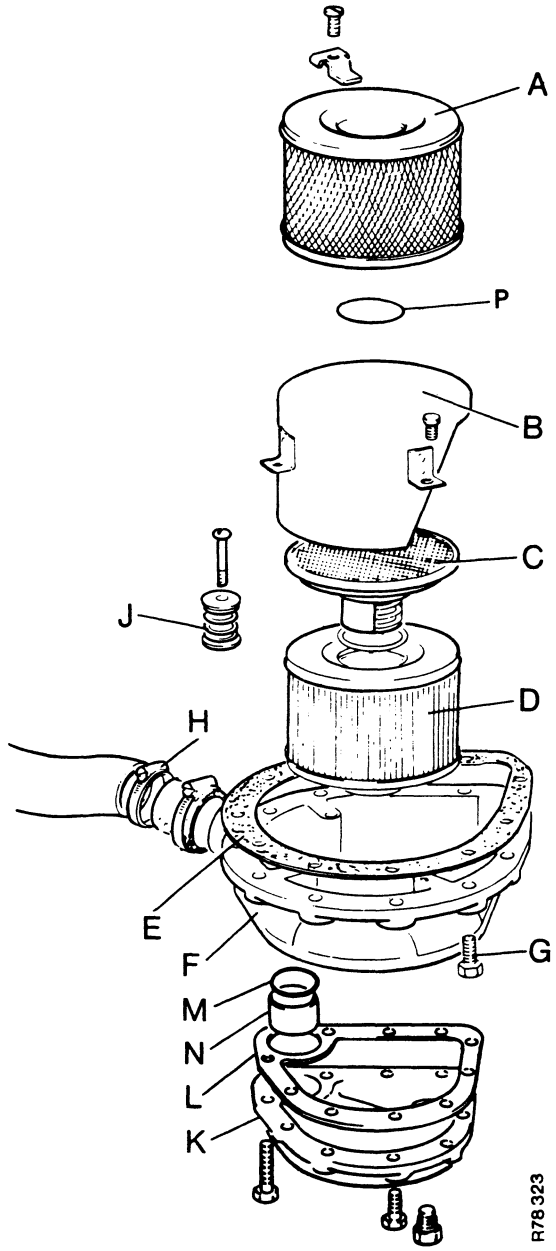

FIGURE 42. SUCTION FILTER

A.	*New type screen*	*H.*	*Hose clip*
B.	*Cover*	*J.*	*Magnet*
C.	*Old type screen*	*K.*	*Cover for housing*
D.	*Paper type element*	*L.*	*Gasket*
E.	*Gasket*	*M.*	*'O' ring*
F.	*Filter housing*	*N.*	*Spacer*
G.	*Bolt, housing*	*P.*	*'O' ring*

REMOVAL AND INSTALLATION

REMOVAL OF THE GEARBOX

On tractors fitted with a Quiet cab or Weather-frame cab, remove the cab first, see Pub 9-38162 or any revisions. Also remove the fenders, all tractors. The following procedure is for a tractor without a cab. Some of the operations will not be needed when a cab has been removed. Some extra jobs have to be done, for example, on hydraulic brakes on a tractor with a cab. Make sure there is space at the rear of the tractor for PTO removal, etc.

1. Clean the tractor. Clean the gearbox cover and the rear axle case.
2. Disconnect the battery leads from the battery.
3. Disconnect the drive cable from the engine speed indicator.
4. Disconnect the wiring from the instrument panel.
5. Remove the fuel from the tank into a clean container with cover.

WARNING: *Diesel fuel is very flammable. Keep container away from heat and sparks. These can cause fires and result in injury or death.*

6. Disconnect the fuel pipes from the tank.
7. Disconnect and remove the hand throttle lever.
8. Remove the bracket for the stop control from the steering box.

9A On tractors with hydrostatic steering:
Remove the oil from the pump/reservoir.
Disconnect the four pipes from the servo valve, see Figure 43.
Put plastic plugs in holes to stop dirt entering.
Remove the bolts which fasten the servo valve to the gearbox cover.

9B On tractors with manual steering:
Disconnect the drag link from the drop arm, see Figure 44.
Remove the bolts which fasten the steering box to the gearbox cover.

10. Remove the steering column assembly.
NOTE: Do not turn the steering wheel after the column has been removed from the tractor.
(a) Oil will come out of the servo valve on the hydrostatic column.
(b) The ball bearings will fall out of the mechanical column.

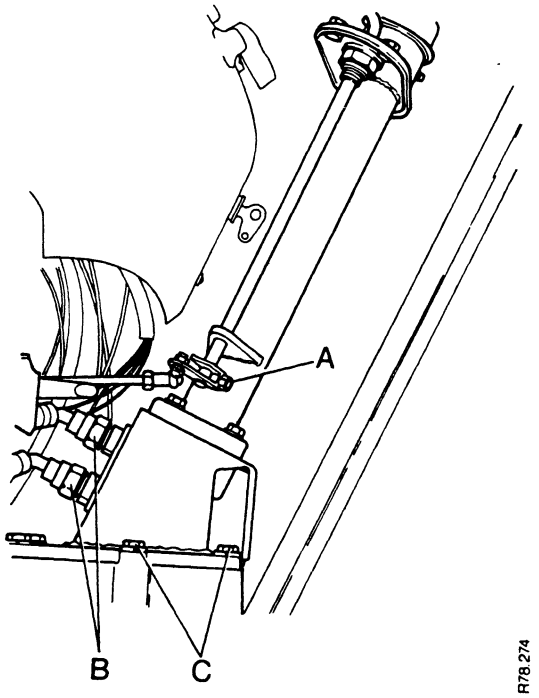

FIGURE 43. HYDROSTATIC STEERING

A. Throttle linkage
B. Oil pipes
C. Bolts, bracket to casing

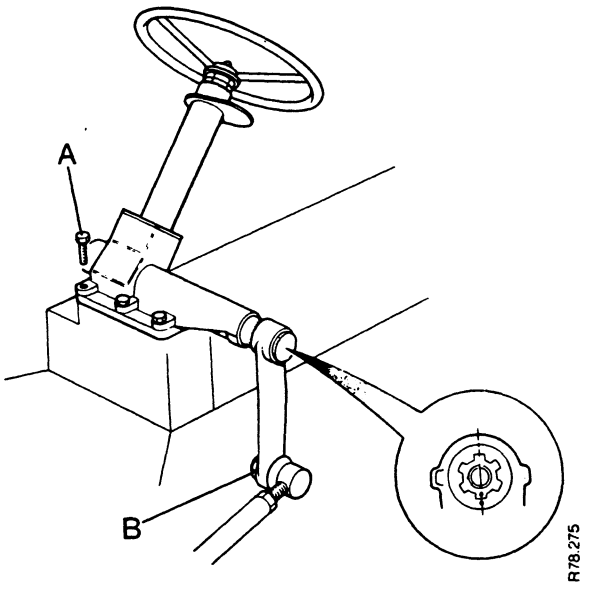

FIGURE 44. MECHANICAL STEERING

A. Bolts, column to casing.
B. Connection, draglink to droparm.

11. Remove the oil from the transmission. Use a container which can hold at least 45 litres. Remove the drain plugs from both the rear axle and the suction filter housing.
    NOTE: If the oil is to be used again, use a clean container with a cover. Discard the last 5 litres of oil at the bottom of the container.
12. Remove the bolts which fasten the seat bracket to the tractor.
    Remove the seat.
13. Remove the bolts which fasten the gearbox cover to the clutch housing and main frame. Lift out the wedge see D Figure 46.
14. Remove the five bolts which fasten the rear axle case to the gearbox cover. Lift off the gearbox cover.
15. Remove the transfer gearbox on 4-wheel drive tractors as follows:
    (a) Remove the bolt from the muff coupling which connects the transfer gearbox to the main pinion shaft.
    (b) Push the muff coupling rearwards onto the pinion shaft.
    (c) Remove the bolts which connect the axle driving shaft to the output shaft of the transfer gearbox.
    (d) Put a trolley jack under the transfer gearbox as a support.
    (e) Remove the four nuts and spring washers which fasten the transfer gearbox to the tractor main frame.
    (f) Disconnect the operating lever linkage.
    (g) Lower the jack and remove the transfer gearbox from under the tractor. Put a cover over the open top to prevent dirt from entering.
16. Put a jack under the drawbar.
    Remove the bolts which fasten the drawbar frame to the hitch brackets. Lower the drawbar frame.
    NOTE: If a pick up hitch is fitted, lower the hitch and disconnect the chains.
17. Disconnect the cable from the sensing unit. Remove the bolts which fasten the sensing unit to the PTO case. Remove the sensing unit.

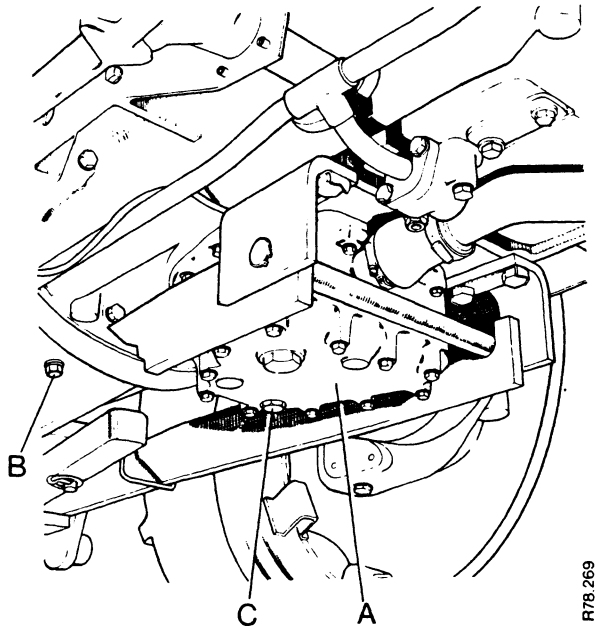

FIGURE 45. DRAIN PLUGS

A. Filter housing
B. Rear axle drain plug
C. Transmission drain plug

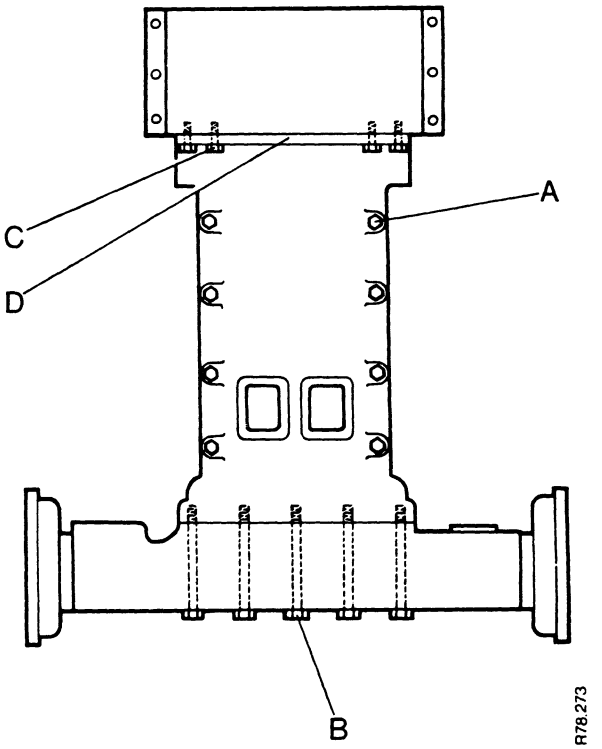

FIGURE 46. GEARBOX COVER

A. Cover to frame bolts
B. Axle case to cover bolts
C. Cover to clutch cover bolts
D. Wedge

18. Remove the lift rod, levelling lever and lower links.
19. Put a sling around the PTO unit. Use a hoist to hold the weight of the PTO unit. Remove the bolts which fasten the PTO unit to the rear axle.

> ⚠ WARNING: *The PTO unit is heavy. Take care when removing the unit, it can cause injury if it falls.*

Remove the PTO unit and pull out the PTO driveshaft from the gearbox.

20. Put wedges of wood between each side of the front axle and the frame. Use a 5 ton jack to raise the rear of the tractor. Put stands under the rear axle and tractor main frame.
Remove the rear wheels.
21. Remove the final drive units, see page 34.
22. Make sure that the spring and sleeve for the differential lock are clear of the differential. To do this you must:
    (a) Remove the oil seal housing from the flange of the rear axle (right-hand).
    (b) Put your hand into the rear axle, pull back the sleeve and the spring of the differential lock.
    (c) If necessary, move the pedal for the differential lock to make sure that components are free.
23. Disconnect the muff coupling between the clutch and the gearbox. To do this, remove the circlip from the clutch driveshaft. Then move the muff coupling forward until it is clear of the gearbox shaft. Remove any shims that are on the shaft.
    NOTE: It is a recommendation that you must make an identification of all parts. This will make assembly easier.
24. Remove the lubrication pipes and the two bolts and bushes which fasten the gearbox to the main frame.
25. Remove the rear axle case complete with hydraulic equipment and ramshaft, as follows:
    (a) Disconnect hydraulic pipes and control lever connections.
    (b) Disconnect the brake rods, cables, and hydraulic cylinders.
    (c) Put a sling around the axle. Fasten the sling to a hoist.
    (d) Remove the bolts which fasten the axle case to the main frame.
    (e) Carefully, pull the axle case away from the main frame. Lower the axle case to the ground when clear of the differential.
26. Use a hoist to remove the gearbox toward the rear.

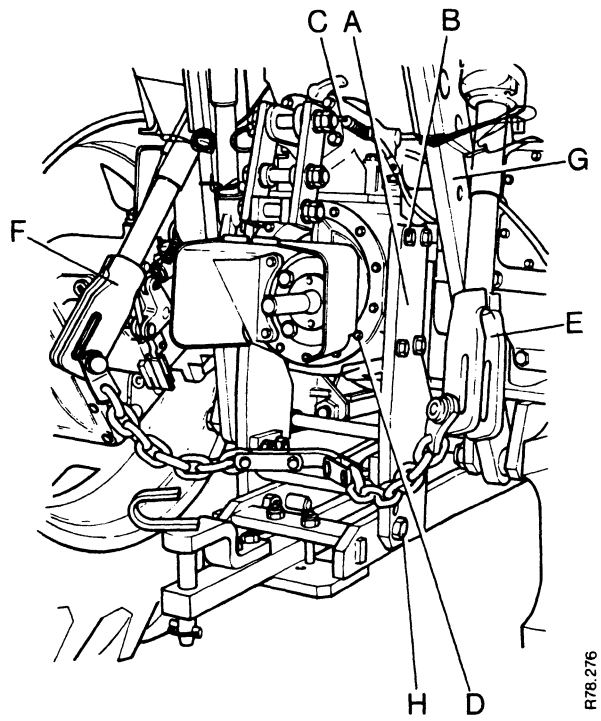

FIGURE 47. REAR OF TRACTOR

A. Hitch plate
B. Setscrews (Hitch plate to PTO casing)
C. Sensing unit cable
D. PTO
E. Level lever
F. Lift rod
G. Lower link
H. Hitch plate bolt

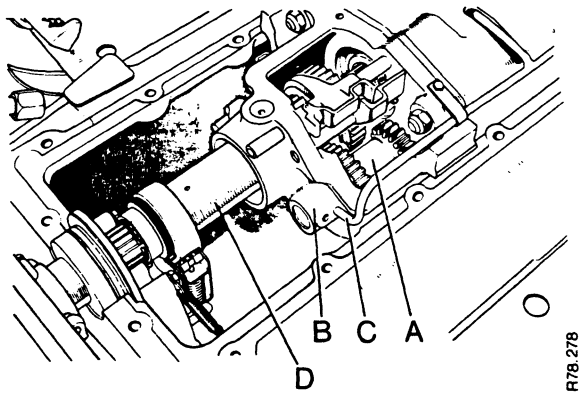

FIGURE 48. LUBRICATION PIPE

A. Slow/Normal layshaft
B. Front end plate
C. Lubrication pipe
D. Muff coupling.

5 litre = 1 gal = 5 U.S. qt
45 litre = 10 gal = 48 U.S. qt

REMOVAL OF THE FINAL DRIVES

WARNING: *The final drive units are very heavy. Take care when removing or installing. If it falls it can cause injury.*

1210 TRACTOR

1. Turn the adjusting nut for each brake drum counter-clockwise, until adjustment is released.
2. Push down the pedal for the differential lock and use wire to fasten it in this position, see Figure 49.
3. Remove the oil from the final drive units.
4. Remove the nuts which fasten the final drive units to the flanges of the rear axle.
5. Put a lever between the ends of the studs and the axle case. Push against the studs to push the final drive away from the axle case.
6. Carefully, move the final drive until the studs are clear of the axle case. Let the unit turn until the cover plate is at the bottom.
7. Use a jack to support the final drive unit and remove the final drive unit completely. Repeat procedure to remove the other final drive unit.

1410 TRACTOR

1. Disconnect the brake rod from each final drive unit. Remove the nuts from the cotter pins in the camshaft for each brake. Remove the cotter pins and make sure that the cam levers are free on the shafts.
2. Push down the pedal for the differential lock and use wire to fasten it in this position see Figure 49.
3. Remove the oil from the final drive units.
4. Remove the nuts which fasten the final drive units to the flanges of the rear axle.
5. Use the lifting bracket, see Figure 14, or a lifting sling and hoist to hold the weight of the unit.

WARNING: *1410 tractors have very heavy final drive units. Approximate weight 225 kg. Use care when removing the units or injury can result.*

6. Remove the unit. Repeat procedure to remove the other unit.

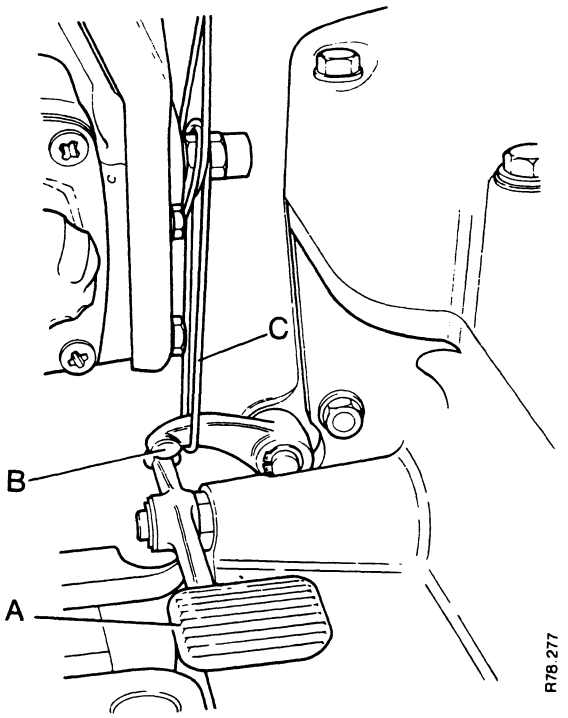

FIGURE 49. DIFFERENTIAL LOCK PEDAL HELD IN ENGAGED POSITION

A. Pedal *C. Wire*
B. Operating lever

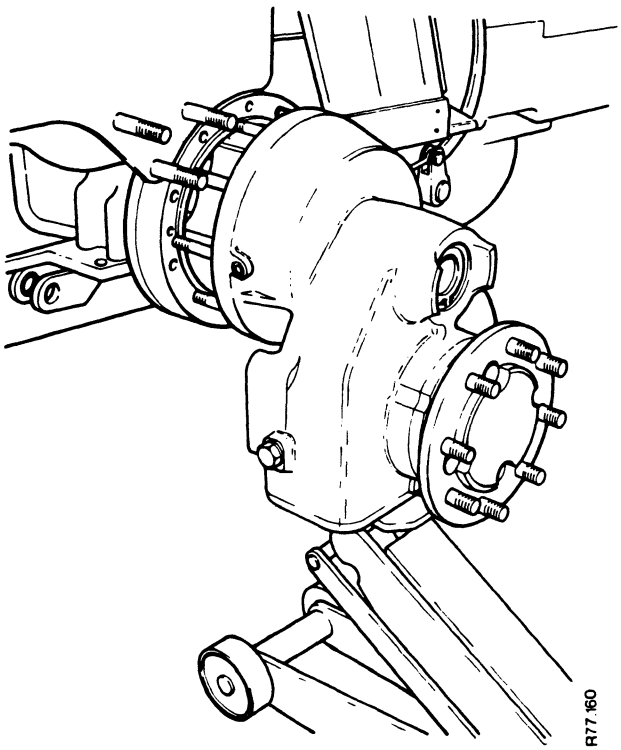

FIGURE 50. REMOVING THE FINAL DRIVE

INSTALLING THE GEARBOX

1. Install the shims on the auxiliary drive gear shaft.
2. Install a new oil seal in the rear end of the clutch driveshaft. Put a small amount of grease on the seal.
3. Install the gearbox into the frame.
4. Install the two bolts which fasten the gearbox to the frame but without the bushes.
5. Make sure that all four lugs of the end plates are flat on the frame.

   If the lugs are not flat on the frame, loosen the four Nyloc nuts on the gearbox casing. Use a soft hammer to align the end plates as necessary.

   Tighten the four nuts to 95 Nm when the lugs are flat on the frame.
6. Remove the two bolts which fasten the gearbox to the frame.

   Install the two bushes and then the bolts, tighten to 135 Nm. Use a feeler gauge to check clearance between the bolt heads and the lugs of the case. This must be between 0·076 to 0·5 mm.
7. Move the muff coupling rearward on to the drive gear against the shims.

   Install the circlip into the groove of the clutch driveshaft to hold the muff coupling in position.
8. Check the clearance between the circlip and the muff coupling. The clearance must be 0·20 to 1·02 mm.

   Remove or add shims behind the muff coupling to get the correct clearance.
9. Use a hone or fine file to remove any sharp edges from the splines of the PTO drive shaft. Do this on the front edges and outer edges along the full length of each spline.

   Apply a small amount of grease. Carefully push the shaft through the topshaft of the gearbox until fully forward.

   NOTE: If the splines will not enter the clutch plate disengage the PTO clutch. Turn and push the shaft at the same time until fully forward into the flywheel.
10. Clean the faces of the rear frame and the axle case.
11. Put a new gasket on the axle case with compound which does not become hard.
12. Install the rear axle case complete with hydraulic equipment and ramshaft.

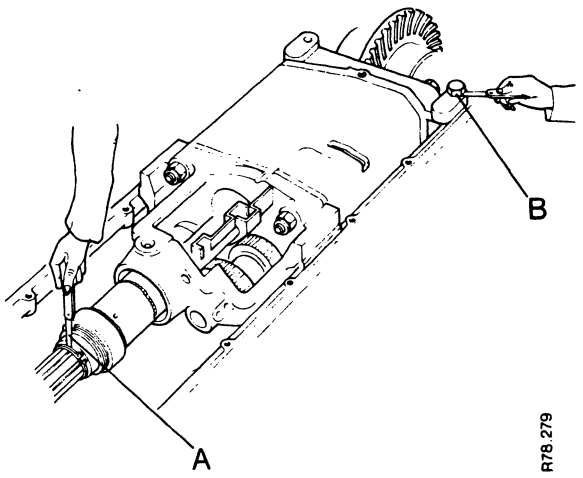

FIGURE 51. INSTALLING THE GEARBOX

A. Checking muff coupling clearance
B. Checking bolt to casing clearance

225 kg = 496 lb
95 Nm = 10 kg m = 70 lb ft
135 Nm = 14 kg m = 100 lb ft
0·20 mm = 0·008 in
1·02 mm = 0·040 in
0·076 mm = 0·003 in
0·5 mm = 0·020 in

13. Put the spring for the differential lock sleeve in position on the differential.
14. Put the lock sleeve on the tool with splines towards differential and enter it into the axle casing. Stop when the groove of the sleeve is behind the inner gusset of the casing.

    NOTE: Do not let the tool enter the spring. The fork cannot be engaged.
15. Align the selector fork with the groove in the sleeve. Turn the tool clockwise until the fork is engaged with the groove.
16. Engage the splines of the sleeve with the differential. Push the pedal down to engage the differential lock. Use a piece of wire to hold the pedal in this position. Remove the tool.
17. Make sure the breather plugs are clear in the axle case flanges on 1410 tractors.
18. Install new seals in the axle case in the following positions. 12 series, all seals to face inwards towards differential. 14 series, install seals in each seal housing back to back.

    NOTE: Put high melting point grease in between the seals in each housing on the 12 series tractor. Apply jointing compound to the seal housings before installing into axle casing.
19. Check brake linings for wear and damage. Clean the inside of the brake drum on 12 series tractor.
20. Clean the joint flanges of the axle case and final drive unit. Fit a new 'O' ring seal to the final drive flange on the 1410 tractors.
21. Install the final drive units. Tighten the bolts to 135 Nm.
22. Install the rear wheels.
23. Connect the brake rods and adjust the brakes.
24. Remove the supports from under the tractor and lower it to the ground. Remove the wedges between the frame and front axle.

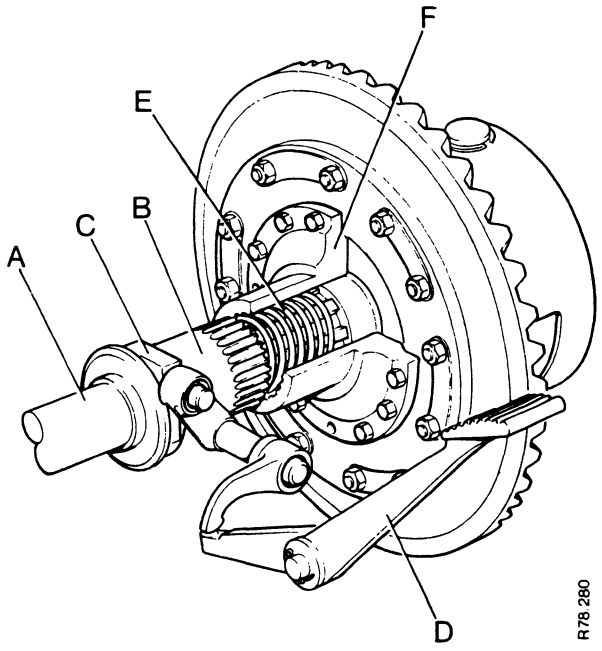

FIGURE 52. DIFFERENTIAL LOCK 1210

A. Spur pinion shaft *D. Pedal*
B. Sleeve *E. Return spring*
C. Operating fork *F. End plate — differential cage*

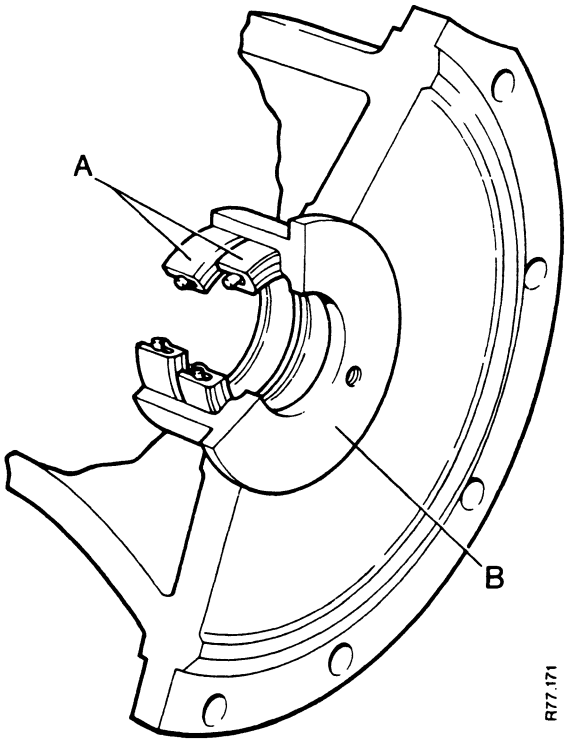

FIGURE 53. AXLE CASE OIL SEALS

A. Oil seals *B. Housing*

NOTE: Seals must be fitted back to back on 1410 tractors.

25. Use a hoist to install the PTO. Tighten the bolts to 102 Nm.
26. Connect the lubrication and the hydraulic pipes.
27. Install the gearbox cover using a new gasket. Make sure the gear levers are correctly aligned with the selector jaws when installing. Check the operation of the levers after the cover is in position, before tightening bolts.
28. Install and tighten cover bolts to 13 Nm. Install the bolts which fasten the cover to the rear axle casing. Tighten to 68 Nm. Tighten the bolts which fasten the cover to the frame to 68 Nm.
29. Install the wedge between the gearbox cover and the clutch housing. Install and tighten the bolts to 68 Nm.
30. Install steering column and bracket. Fill the steering box on tractors with manual steering. Connect drag link to drop arm.
31. Connect the oil pipes to the control valve on tractors with hydrostatic steering. Fill system with the correct grade of oil.
32. Install the transmission drain plugs and tighten. Fill the transmission with the correct oil to the correct level. Use a funnel with a filter installed.

    NOTE: Discard the last 5 litres of oil if using old oil. Add new oil to the correct level.
33. Install the sensing unit and connect the cable.
34. Install the three point linkage and drawbar.
35. Install the fuel tank and instrument panel. Connect all wires and pipes. Fill fuel tank if necessary.
36. Connect: throttle linkage, engine stop control and the cable for the engine speed indicator.
37. Install seat on tractors without cab.
38. Install the cab.
39. On tractors with hydrostatic steering raise the front axle off the ground. Run the engine at idle speed. Turn the steering from lock to lock several times to remove air from the system. Do not permit the steering to reach full lock when doing this operation.

    On tractors with the steering ram behind and parallel with the axle do the following.

    Release left-hand bleed screw, turn steering to the right; tighten bleed screw.

    Release right-hand bleed screw, turn steering to the left, tighten the bleed screw.

    Fill reservoir to correct level.

    Check the level of the oil in the reservoir with the front wheels as follows:

    Tractor with side ram, full right-hand lock.

    Tractor with transverse ram behind axle, wheels straight forward.

    Tractor with 4-wheel drive, full left-hand lock.

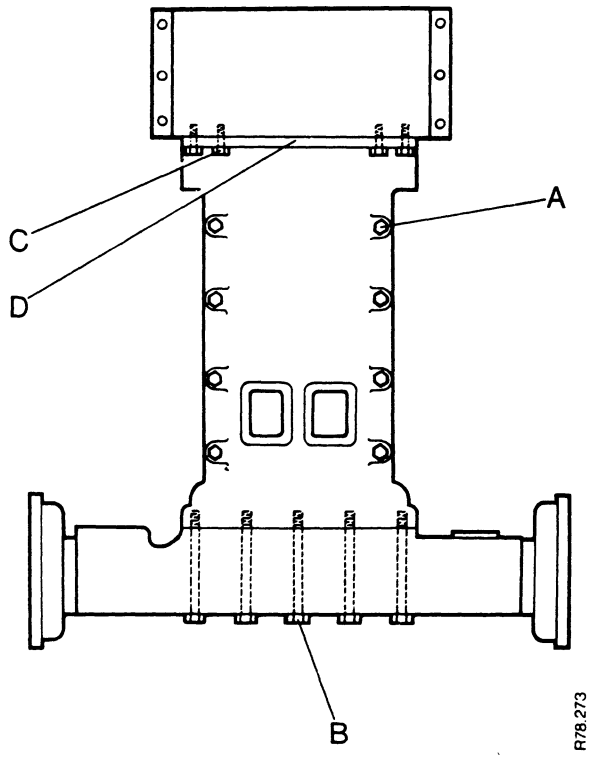

FIGURE 54. GEARBOX COVER AND REAR AXLE CASE

A. Bolts, gearbox cover
B. Bolts, axle to cover
C. Bolts, cover to clutch housing
D. Wedge

135 Nm	= 14 kgm	= 100 lb ft
102 Nm	= 10 kgm	= 75 lb ft
68 Nm	= 7 kgm	= 50 lb ft
13 Nm	= 2 kgm	= 10 lb ft
5 litres	= 1 gal	= 5 U.S. qt

DISASSEMBLY AND ASSEMBLY

1210 TRACTOR WITHOUT CAB

DISASSEMBLY OF GEARBOX

Use a stand as shown in Figure 1.

1. Use the bolts which fasten the gearbox to the main frame to fasten the gearbox to the stand. The gearbox must be installed on the stand as shown in Figure 1.
2. Engage any forward gear and put a soft metal punch between the front layshaft gear and the casing spacer.

   Use a $1\frac{11}{16}$ AF socket to remove the pinion shaft nut, clockwise.

   The nut has a left-hand thread and is very tight, 271 Nm.

   Remove the nut, washer and bearing cone.
3. Put all gears in neutral and the high/low and slow/normal gears in the centre position.
4. Remove the pins from the high/low selector fork and the slow/normal jaw.

   Use a hammer and a parallel punch.

   Get assistance to hold a steel bar under each selector rod as a support.
5. Turn the slow/normal rod 90 degrees to compress the detent ball. Pull the rod out through the front end plate. Put a finger over the detent hole to prevent the ball coming out when the shaft is removed. Remove the detent ball.
6. Turn the high/low selector jaw 90 degrees and remove the pin.

271 Nm = 28 kg m = 200 lb ft

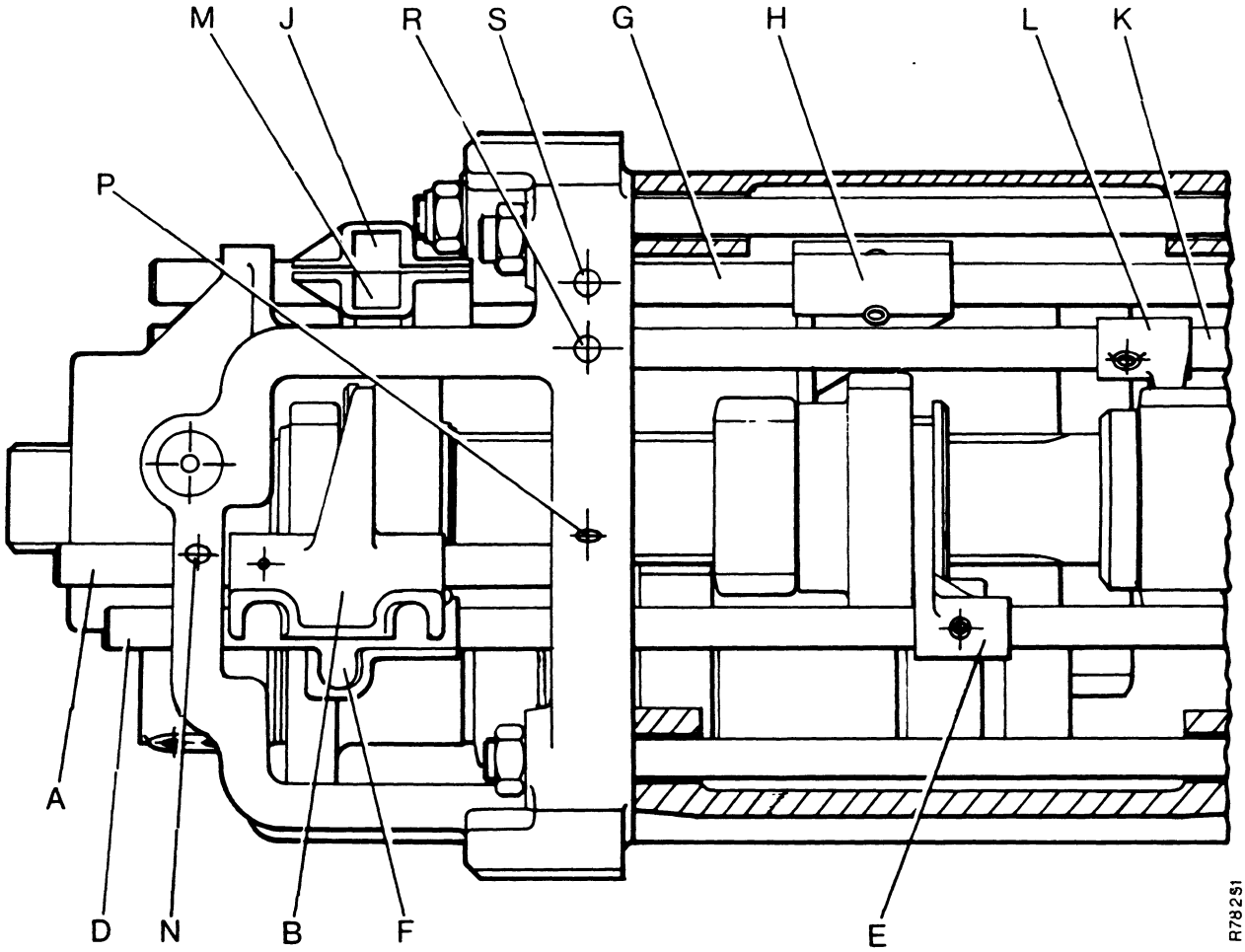

FIGURE 55. ARRANGEMENT OF SELECTORS

A. Slow/Normal rod
B. Slow/Normal fork and jaw
D. High/Low rod
E. High/Low fork
F. High/Low jaw
G. 2nd/3rd rod
H. 2nd/3rd fork
J. 2nd/3rd jaw
K. 1st/Rev. rod
L. 1st/Rev. fork
M. 1st/Rev. jaw
N. Slow/Normal detent ball hole
P. High/Low detent ball hole
R. First/Reverse detent ball hole
S. Second/Third detent ball hole

7. Remove the pin from the second/third selector fork.
   Select third gear and turn the jaw 180 degrees. Remove the pin by hitting down. Pull the rod out through the front end plate.
   Put a finger over the detent hole to prevent the ball coming out when the rod is removed.
   Remove the detent ball and fork.
8. Remove the pin from the first/reverse selector jaw by hitting it up from below.
9. Remove the four nyloc nuts from casing studs and bolts. Remove the two top bolts.
10. Push the high/low selector rod toward the rear until clear of the front end plate. Move the rod enough so that the high/low jaw and slow/normal fork can be removed.
11. Push the first/reverse selector rod toward the rear as far as it will go.
12. Hold the selector rod toward the rear and pull the front end plate forward.
    Do this until the slow/normal sliding gear and the jaw for first/reverse can be removed.
13. Put a hand over the detent holes for first/reverse and high/low then remove the front plate.
    Remove the detent balls.
14. Pull the first/reverse rod forward as far as it will go. Pull the casing spacer and layshaft forward about 12 mm.
15. Remove the bolt which holds the top shaft rear bearing in position. The washer will fall inside the gearbox, remove later. Remove the top shaft assembly and the high/low rod and fork.
16. Remove the layshaft.
17. Remove the two spacers and the shims from the front of the pinion shaft. Keep these in a clean safe place. The shims will be needed to set the bearing preload when assembling.
18. Remove the splined washer from the pinion shaft.
19. Lift the front of the pinion shaft and remove the third gear. Remove the six bronze bearing pads.
20. Move the synchroniser unit and the front dog clutch gear forward as far as possible.
21. Remove the front circlip from the groove and slide it forward.
22. Slide the second gear and rear dog clutch gear forward.
23. On tractors up to serial number 729430, remove the rear circlip from the groove and slide forward. On tractors from serial number 729430, slide special splined washer forward and remove the split-ring.

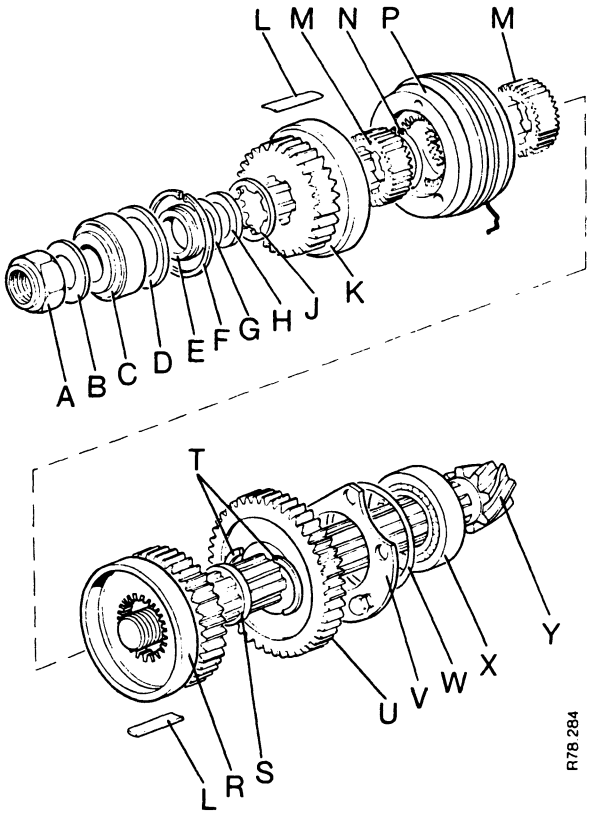

FIGURE 56. BEVEL PINION SHAFT ASSEMBLY

A.	*Nut*	*M.*	*Dog gears*
B.	*Washer*	*N.*	*Circlip*
C.	*Bearing, front*	*P.*	*Synchroniser unit*
D.	*Distance piece*	*R.*	*Second gear*
E.	*Distance piece*	*S.*	*Special washer*
F.	*Circlip*	*T.*	*Split-ring*
G.	*Shims*	*U.*	*First/Reverse gear*
H.	*Distance piece*	*V.*	*Plate*
J.	*Splined washer*	*W.*	*Shims*
K.	*Third gear*	*X.*	*Bearing, rear*
L.	*Bearing pad (6)*	*Y.*	*Shaft*

NOTE: Item S and T installed instead of circlip from serial number 729430 on 1210 tractors.

13 mm = ½ in

24. Pull the first/reverse selector rod forward and lift out.
25. Pull the spacer forward and remove the following parts from the pinion shaft:

    front dog clutch gear, synchroniser unit and selector fork, front circlip, rear dog clutch gear, second gear and the six bearing pads, rear circlip or special washer, first/reverse gear.
26. Remove the casing spacer from the bottom studs.

    Remove the washer for the topshaft rear bearing from the spacer. Remove the pin for the high/low fork from the spacer.
27. Remove the two balls for the starter safety plunger from the spacer. Remove the plunger from the rear end plate.

    NOTE: These balls can be removed earlier if a rod type magnet is available.
28. Remove the pinion shaft if necessary, as follows:
    (a) Fasten the rear end plate at the other end of the stand.
    (b) Make a punch mark on one bearing cap and on the rear end plate for identification when assembling.

    IMPORTANT: The caps must be installed in exactly the same positions when assembling.

    (c) Release the tabwashers and hold the weight of the differential unit while removing the cap bolts. Remove the caps and adjuster rings.

    IMPORTANT: Do not mix the caps and adjuster rings.

    (d) Remove the differential and then remove the pinion shaft complete with bearing cone.
29. Remove the two gear locks and the four detent springs from the front end plate.
30. Remove the tension pin from the spindle of the slow/normal layshaft.
31. Push the spindle out of the plate and layshaft.
32. Remove the small circlip from the front of the slow/normal input shaft.
33. Hold the layshaft away from the input shaft.

    Hit the front of the input shaft lightly with a soft face hammer.

    Remove the shaft complete with rear bearing.

    IMPORTANT: Make sure the layshaft gear does not make contact with the front bearing during this operation.
34. Remove the layshaft complete with bearings, spacer and thrust washers.
35. Remove the bearing cups from the end plates if necessary.
36. If necessary, remove the front bearing for the input shaft by removing circlip and pulling forward.

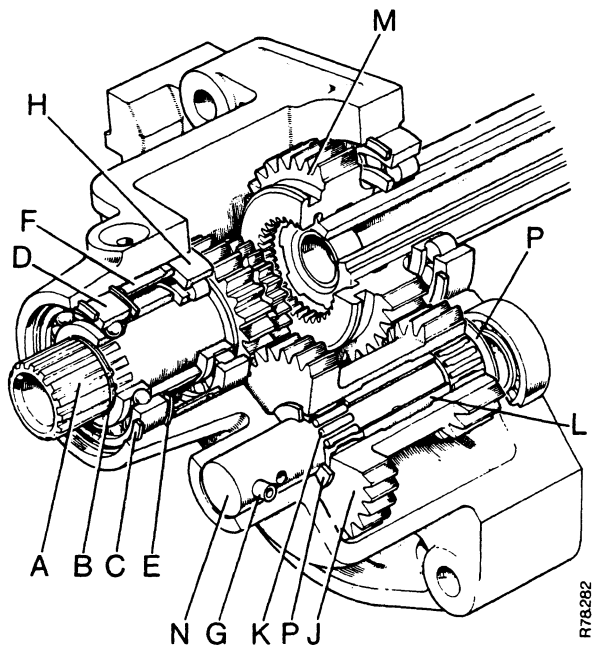

FIGURE 57. SLOW/NORMAL REDUCTION UNIT

A. Input shaft
B. Small circlip
C. Large circlip
D. Front ball bearing
E. Inner circlip
F. Bearing spacer
G. Tension pin
H. Rear roller bearing
J. Layshaft
K. Needle roller bearing
L. Bearing spacer
M. Driven gear
N. Layshaft spindle
P. Thrust washers

INSPECTION OF PARTS

Clean all parts before making an inspection.

Selector Parts

1. Check the selector rods and forks for wear, damage and distortion.
2. Check the steel balls for wear and damage.
3. Put the balls into the grooves of the selector rods.
4. Check that there is a clearance between the ball and the bottom of the groove. See Figure 58.
5. If there is no clearance, grind the bottom of the groove to give a small clearance.
6. Measure the length of each detent spring. If less than 31·7 mm install new springs.
7. Measure the depth of the spring holes using the following method, see Figure 59.
   (a) Use a piece of metal rod A, Figure 59, approximately 152 mm long and 9·5 mm diameter.
   (b) Make a mark B on the rod 28 mm from one end.
   (c) Put the marked end of the rod into the spring hole.
   (d) Look through the selector rod hole D. The mark must be in line with the lower edge of the selector rod hole. See Figure 59.
   (e) If the mark is lower, shims must be put in the bottom of the hole. Add shims until the mark aligns with the lower edge of the selector rod hole.

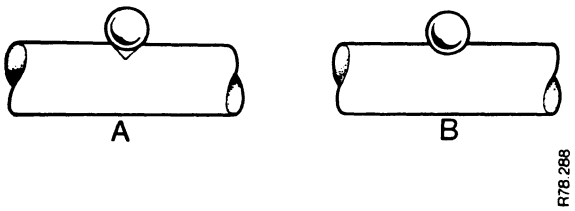

FIGURE 58. SELECTOR ROD AND DETENT BALL
A. Correct *B. Wrong*

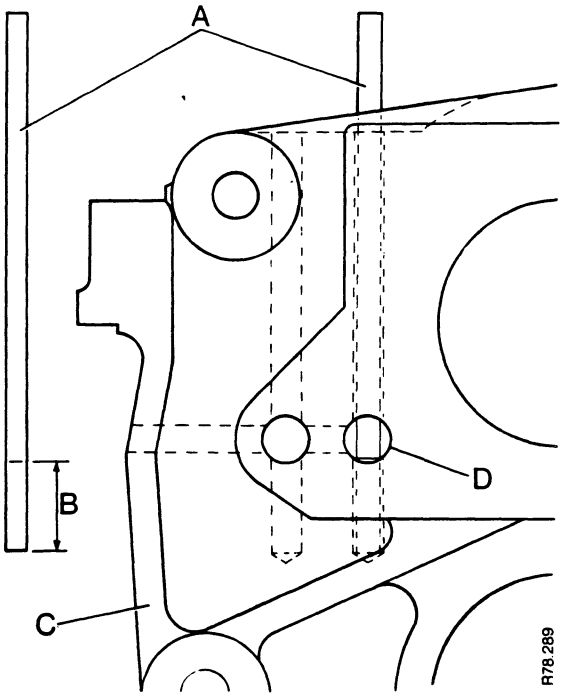

FIGURE 59. CHECKING DEPTH OF DETENT SPRING HOLES
A. Test rod *C. End plate*
B. 28 mm mark *D. Selector rod hole*

31·7 mm = 1¼ in
152 mm = 6 in
28 mm = 1 1/10 in
9·5 mm = ⅜ in

Gears

1. Check the gear teeth for wear and damage.
2. Check that all teeth are evenly marked.

   NOTE: When a gear has to be replaced, also replace all other gears in that ratio. Rapid wear and failure will occur if this is not done.
3. Check the operation of the synchroniser unit. Check the six springs for damage, replace as a set if necessary.

   NOTE: Do not try to disassemble the synchroniser unit. Make sure the surface of the synchronising rings is not damaged during inspection.

Bearings

1. Check for wear and damage of all parts including outer cups in end plates.

   Install new outer cups when a new taper roller bearing is installed.

   Make sure the cups are correctly installed to prevent moving after installation.
2. Check the slow/normal layshaft spindle, needle bearings and layshaft bore for wear and damage.

   When a defect is found on any part, replace all parts. Use new type bearings and spacer when making a repair to an early type gearbox.

   NOTE: Rapid wear and failure will occur if only part of the assembly is replaced.
3. Check the bush in the front end of the top shaft for wear and damage.

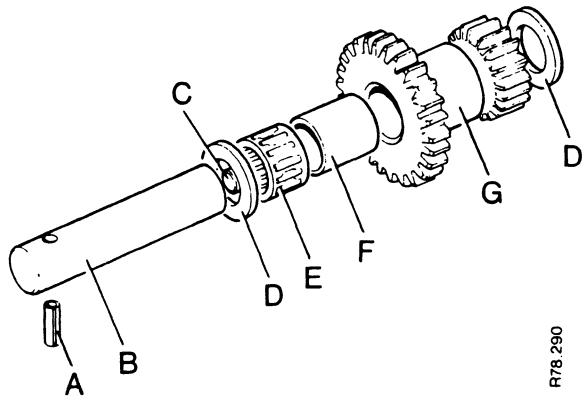

FIGURE 60. SLOW/NORMAL LAYSHAFT

A. Pin
B. Spindle
C. Plug
D. Thrust washer
E. Needle bearing
F. Spacer
G. Layshaft gears

ADJUSTMENTS BEFORE ASSEMBLY

Slow/Normal Layshaft

1. Put the layshaft, with the bore vertical and the large gear on a flat surface.
2. Install the bearings with the distance piece between into the bore of the layshaft. Push the bearings and distance piece in until level with the end with the large gear.
3. Put a straight edge across the small gear as shown in Figure 61. Use a feeler gauge to measure the gap between the top bearing and the straight edge.

   The clearance must be between 0·25 mm and 1·3 mm.
4. If the clearance is not correct check:
   (a) The bearing Part Number K620273.
   (b) The length of the distance piece, which must be 42·54 mm to 42·67 mm.

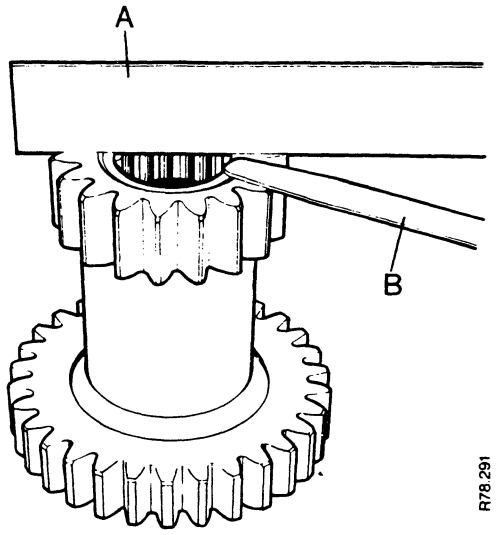

FIGURE 61. CHECKING BEARING CLEARANCE

A. Straight edge *B. Feeler gauge*

0·25 mm = 0·010 in
1·30 mm = 0·050 in
42·54 mm = 1·675 in
42·67 mm = 1·680 in

Main Layshaft Clearance

1. Measure the front shoulder of the layshaft as shown in Figure 62.
2. Remove the bearing cup from the front or rear end plate, see Figure 62.
3. Remove shims 0·20 mm in thickness. Install the bearing cup again.
4. Assemble the gearbox case with the layshaft in position. Install the four Nyloc nuts which fasten the assembly together. Tighten to a torque of 95 Nm.
5. Turn the layshaft in both directions to align the bearings.
6. Put a dial gauge against the end of the layshaft, to measure the free movement.
7. Move the layshaft backwards and forwards turning it at the same time and applying a small load.
8. Read the amount of movement shown on the dial gauge. The correct amount of free movement must be 0·05 to 0·10 mm.
9. To find the correct amount of shims needed, subtract the movement needed from the movement measured.

   Example: Movement measured 0·25 mm
   Movement needed 0·07 mm
   Shims needed 0·18 mm
10. Disassemble the gearbox and install the correct amount of shims between the bearing cup and the end plate.
11. Do steps 4 to 8 again and check that the movement is correct.

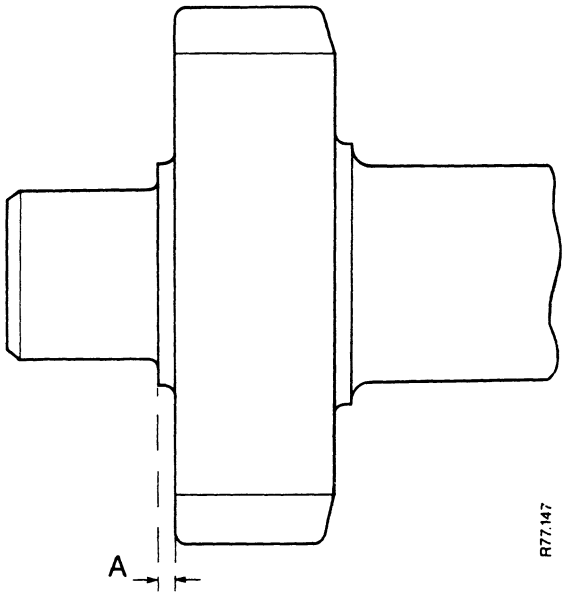

FIGURE 62. FRONT END OF LAYSHAFT

If A = 1·5 to 1·73 mm
Install shims in the front end plate
If A = 3·33 to 3·58 mm
Install shims in the rear end plate

1·50 mm = 0·058 in
1·73 mm = 0·068 in
3·33 mm = 0·131 in
3·58 mm = 0·141 in
0·20 mm = 0·008 in
0·10 mm = 0·004 in
0·05 mm = 0·002 in
0·25 mm = 0·010 in
0·07 mm = 0·003 in
0·18 mm = 0·007 in
95 Nm = 10 kg m = 70 lb ft

Topshaft Clearance

1. Remove the shims from between the rear end plate and rear bearing. See B Figure 63.
2. Assemble the gearbox case with the topshaft complete in position. Tighten the four Nyloc nuts which fasten the assembly together to a torque of 95 Nm.
3. Push the topshaft, including rear bearing towards the front of the gearbox as far as it can go.
4. Use a feeler gauge to measure the gap between the rear plate and the rear bearing.
5. Subtract 0·05 mm from the measurement to find the thickness of shims needed.

   Example:

Gap	0·50 mm
Minus	0·05 mm
Shims needed	0·45 mm

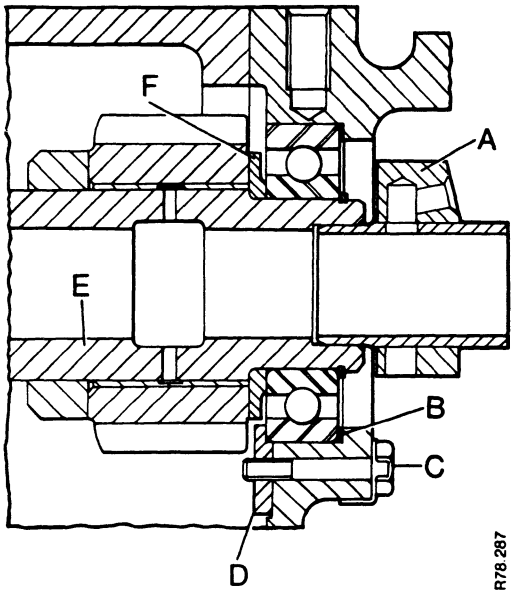

FIGURE 63. TOPSHAFT CLEARANCE ADJUSTMENT

A. Lubrication muff, 14 series tractors only
B. Shims for adjustment
C. Bolt which fastens rear bearing
D. Special washer
E. Topshaft
F. Thrust washer

0·05 mm = 0·002 in
0·45 mm = 0·018 in
0·50 mm = 0·020 in
95 Nm = 10 kg m = 70 lb ft

Pinion Shaft Adjustment

1. Remove the outer cup of the rear bearing from the rear end plate.
   Remove the shims from the end plate and install the cup again.
2. Assemble the gearbox casing.
   Install the pinion shaft without the gears and distance piece behind the front bearing.
3. Tighten the pinion shaft nut while turning the shaft by hand, until all free movement is removed. Hit both ends of the shaft with a soft face hammer and check again.
4. Loosen the nut until the shaft can be turned but still has a small amount of bearing friction.
5. Assemble the setting gauge, (Service Tool DB8208) as follows:
   Put the 6·3215 in spacer on to the probe of the tool.
   Screw the probe into the shaft B, Figure 64.
   Install the locknut, but do not tighten it.
6. Install the tool into the rear end plate of the gearbox as shown in Figure 65.
   Tighten the differential bearing caps to hold the tool in the correct position.
7. Turn the probe counterclockwise until the end is just in contact with the face of the bearing cone.
   Tighten the lock nut of the probe then check that the probe has not moved.
8. Use a feeler gauge to measure the gap between the spacer D and the shaft B, Figure 64.
   Make a note of the measurement.
9. Make a note of the measurement marked on the end of the pinion gear. This is shown as + or − and −7 = −0·007 in for example.
10. To find the correct amount of shims to install use the following method:
    (a) If the pinion is marked minus (−), subtract the number shown from 0·030 in.

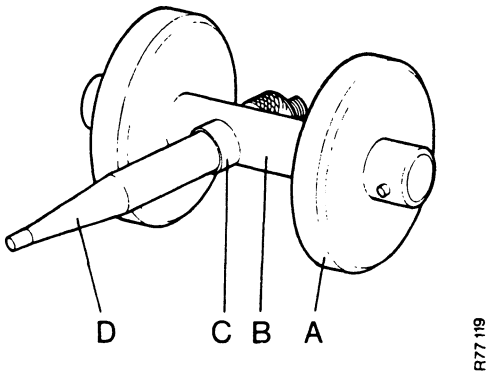

FIGURE 64. PINION SETTING GAUGE
(Service Tool DB 8208)

A. Disc
B. Shaft
C. Spacer
D. Probe

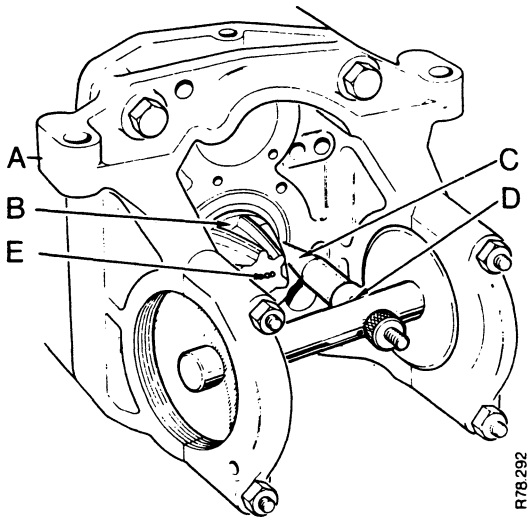

FIGURE 65. CHECKING PINION SETTING

A. Rear end-plate
B. Pinion bearing
C. Probe
D. Spacer
E. Mark on pinion

0·18 mm = 0·007 in
0·76 mm = 0·030 in

(b) If the pinion is marked plus (+), add the number to 0·030 in.

(c) Subtract the result from the gap measurement between the spacer and the shaft of the gauge.

Example:	(a)	(b)
Constant dimension	0·030 in	0·030 in
Pinion mark	−0·007 in	+0·007 in
Result	0·023 in	0·037 in
Gap measurement	0·057 in	0·057 in
Result	−0·023 in	−0·037 in
Shims needed	0·034 in	0·020 in

Make sure the result is correct and make a note of it before disassembling the gearbox.

11. Remove the setting gauge from the end plate.
12. Remove the pinion shaft and disassemble the casing.
13. Use a hammer and soft metal punch to remove the outer bearing cup from the rear end plate.
14. Put the correct amount of shims in the end plate and install the bearing cup again.

    Make sure the bearing cup is tight against the shims.

0·76 mm = 0·030 in
0·18 mm = 0·007 in
0·58 mm = 0·023 in
0·93 mm = 0·037 in
1·45 mm = 0·057 in
0·88 mm = 0·034 in
0·50 mm = 0·020 in

ASSEMBLY OF GEARBOX

1. Install the front bearing for the input shaft and install all bearing cups which have been removed.
2. Put the slow/normal layshaft in the front end plate complete with bearings and spacer.
3. Hold the end plate so that the layshaft is kept away from the input shaft.

   Install the input shaft and fit front circlip.
4. Put a new thrust washer each end of the layshaft and install the layshaft spindle. Fit the tension pin which holds the spindle in position.
5. Put the four detent springs and the first/reverse gear lock in the front end plate.
6. Remove the circlip from the rear of the topshaft. Remove the rear bearing and install it in the rear end plate with the correct amount of shims. See page 46 for topshaft adjustment.
7. Fasten the bearing in position with the bolt and special washer.

   Use a new tabwasher to lock the bolt.

   Make sure the washer is correctly installed.
8. Install the pinion shaft in the rear end plate with the correct amount of shims. See page 47 for pinion shaft adjustment.
9. Install the differential with the spiral gear as far to the right as possible.

   For final adjustments after assembly see pages 77 and 78.

   Make sure the caps and adjuster rings are in the correct positions then tighten the cap bolts, with your fingers.
10. Insert a wedge of wood between the end of the pinion shaft and the differential cage. This will hold the shaft in position while assembling.
11. Slide the casing spacer on to the bottom two studs until the studs just enter the front holes.
12. Slide the first/reverse gear on to the pinion shaft with the selector groove toward the differential.
13. Push the spacer rearward until the ends of the studs are level with the front face.
14. Push the first/reverse gear toward the rear as far as possible.
15. On tractors up to serial number 729430 slide the rear circlip on the shaft until between the circlip grooves.

    The circlip will be pushed into the rear groove later.

    On tractors from serial number 729430 install the special splined washer with the flat face forward. The washer must be forward of the rear groove in the shaft.

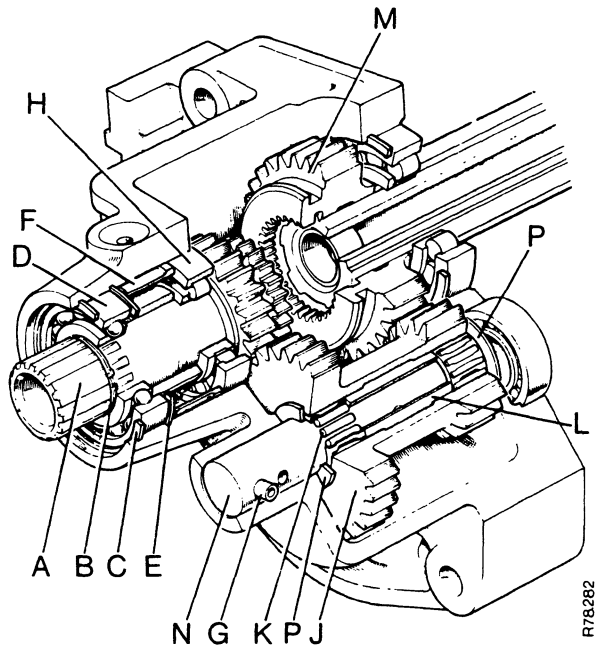

FIGURE 66. SLOW/NORMAL GEAR ASSEMBLY

A. Input shaft
B. Circlip
C. Circlip
D. Bearing
E. Circlip
F. Spacer
G. Spring pin
H. Roller bearing
J. Layshaft
K. Needle bearings
L. Spacer
M. Driven gear
N. Layshaft spindle
P. Thrust washers

16. Slide the second gear on to the shaft with the synchroniser cup toward the front.
    Put a small amount of grease on the six bronze bearing pads.
    Insert the bearing pads into the bore of the gear, in the splines of the shaft.
17. Install the rear dog clutch gear with the reduced part of the teeth toward the front.
    Make a note of the position of the punch mark on the side of the gear.
18. Slide the front circlip on the shaft but not into the groove.
19. Install the front dog clutch gear with the reduced teeth toward the rear. Align the punch mark on the side of the gear with the mark on the rear gear.
20. Install the synchroniser gear on the dog clutch gears.
21. Install the selector fork into the groove of the synchroniser gear with the flat face forward.
22. Put the selector fork for first and reverse into the groove on the first/reverse gear.
23. Push the casing spacer toward the rear until 25 mm from the rear end plate.
24. On tractors from serial number 729430, put the split-ring in the rear groove of the pinion shaft. Slide the special splined washer over the split-ring.
25. Push the synchroniser gear, dog gears and second gear against the special washer. On tractors up to serial number 729430, push up to the circlip.
    The circlip between the dog clutch gears will go into the groove on the shaft. Check by trying to pull the second gear forward. It will not move if the circlip is in the groove.
26. Slide the third gear on the shaft with the synchroniser cup toward the synchroniser gear.
    Put a small amount of grease on the six bronze bearing pads. Install the bearing pads into the bore of the gear in the splines of the shaft.
27. Put grease on one side of the splined washer and install it with the grease toward the third gear.
28. Put the layshaft in position in the casing spacer with the smaller gear at the rear.
29. Put the high/low selector fork on the high/low selector rod with the flat face toward the front. Make sure the three detent grooves are down.
30. Put the fork in the high/low pinion groove, on the topshaft.
    Install the topshaft assembly with the high/low selector rod and fork into the rear end plate.

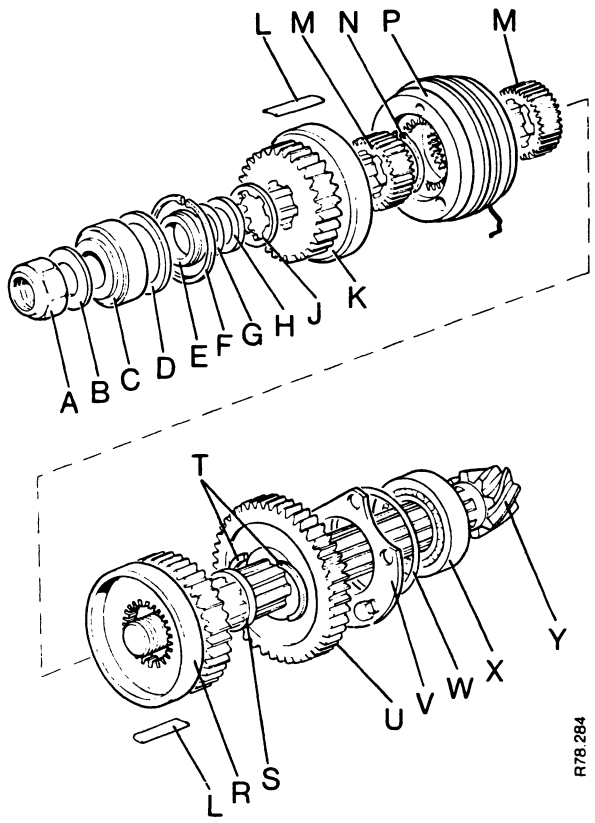

FIGURE 67. BEVEL PINION SHAFT ASSEMBLY

A.	*Nut*	*M.*	*Dog gears*
B.	*Washer*	*N.*	*Circlip*
C.	*Bearing, front*	*P.*	*Synchroniser*
D.	*Distance piece*	*R.*	*Second gear*
E.	*Distance piece*	*S.*	*Special washer*
F.	*Circlip*	*T.*	*Split-ring*
G.	*Shims*	*U.*	*First/Reverse gear*
H.	*Distance piece*	*V.*	*Plate*
J.	*Splined washer*	*W.*	*Shims*
K.	*Third gear*	*X.*	*Bearing, rear*
L.	*Bearing pad (6)*	*Y*	*Shaft*

NOTE: Items S and T installed instead of circlip from serial number 729430 on 1210 tractors.

25 mm = 1 in

31. Push casing spacer against the rear end plate. Enter the layshaft rear bearing at the same time into the rear end plate.
32. Push the high/low selector rod through the rear plate for about 150 mm.
33. Use a soft face hammer to push the topshaft into the rear bearing as far as it will go.

    NOTE: Make sure the front bearing of the top-shaft does not come into contact with the front layshaft gear.
34. Fit the outer cup to front bearing of topshaft.
35. Install the front end plate as follows:
    (a) Enter the first/reverse selector rod in the front end plate and install the detent ball. Use the tool as shown in Figure 68.
    (b) Push the front plate rearward until just on the bottom studs.
    (c) Put the first/reverse selector jaw on the selector rod, open jaw outward.
    (d) Install high/low detent ball and push the selector rod through the front plate.
    (e) Install the high/low gear lock.
    (f) Put the slow/normal sliding gear on the rear of the input shaft, with selector jaw and fork. Make sure the pin hole is toward the front.
    (g) Put the high/low selector jaw on the high/low rod.
    (h) Push the front plate against the casing spacer. At the same time engage the splines of the topshaft in the slow/normal sliding gear.
36. Push the two top casing bolts in from the front. Install the four nyloc nuts and tighten to 95 Nm.
37. Fit the pin for the first/reverse selector jaw from above. The pin must have 1·6 mm showing above the surface of the jaw.
38. Select reverse gear.
39. Check that the splined washer is still in position on the front of the pinion shaft.
40. Add 0·25 mm to the shims for the pinion shaft. Install the shims between the two spacers on the front of the pinion shaft. The small face of the front spacer must be toward the bearing.

    Install the front bearing cone, flat washer and nut.
41. Insert a soft metal punch between the front layshaft gear and the casing.

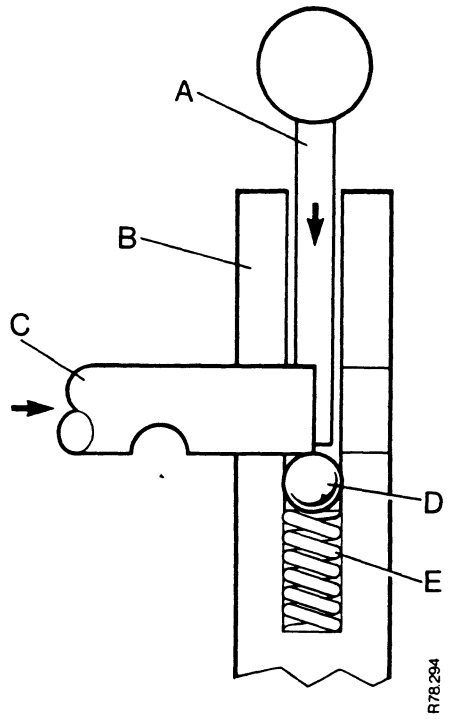

FIGURE 68. INSTALLING THE DETENT BALLS

A. Tool
B. End plate
C. Selector rod
D. Detent ball
E. Detent spring

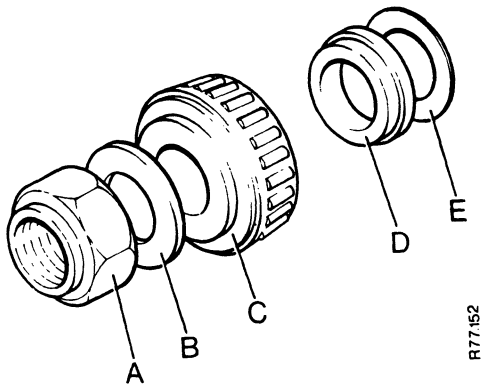

FIGURE 69. PINION SHAFT FRONT PARTS

A. Nut
B. Washer
C. Roller bearing
D. Special spacer with shoulder
E. Shims

1·6 mm = $\frac{1}{16}$ in
95 Nm = 10 kg m = 70 lb ft
150 mm = 6 in
0·25 mm = 0·010 in

42. Tighten the pinion shaft nut counter-clockwise to 271 Nm.
    NOTE: If there is not one and a half threads showing through the nut, remove and check splined washer.
43. Remove the wedge of wood from between the end of the pinion shaft and the differential.
44. Check the end movement of the pinion shaft by moving it forward then backward. Turn the shaft and apply load by hand while doing this.
    Measure the amount of movement with a dial gauge.
    Remove shims to the same value as the movement plus 0·05 mm. This will give a bearing preload of 0·05 mm.
45. Push the high/low selector rod towards the front until the pins for the fork and jaw can be fitted.
    Pins must have 1·6 mm showing above the surface.
46. Select high or low gear range.
47. Install slow/normal selector rod with detent groove to the front and down.
    Install the pin for the jaw and fork.
48. Put the first/reverse selector in the neutral position.
49. Install the second and third selector rod with the three grooves to the front and down.
    Install the pins for the jaw and fork.
50. Install the circlip on the rear end of the topshaft.
51. Install the balls and plunger for the starter safety switch.

1·6 mm = $\frac{1}{16}$ in
0·05 mm = 0·002 in
0·25 mm = 0·010 in
271 Nm = 28 kg m = 200 lb ft

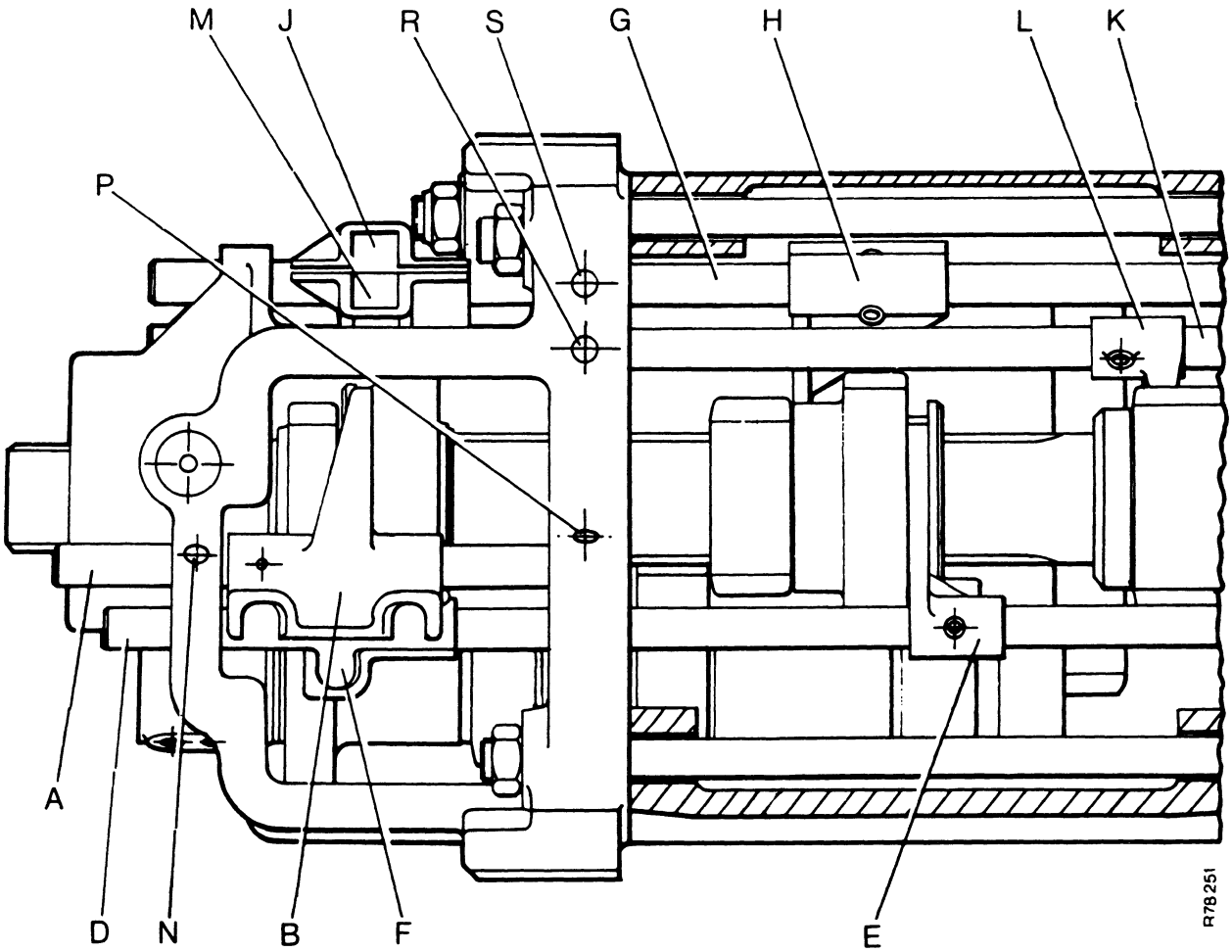

FIGURE 70. ARRANGEMENT OF SELECTORS

A. Slow/Normal rod
B. Slow/Normal fork and jaw
D. High/Low rod
E. High/Low fork
F. High/Low jaw
G. 2nd/3rd rod
H. 2nd/3rd fork
J. 2nd/3rd jaw
K. 1st/Rev. rod
L. 1st/Rev. fork
M. 1st/Rev. jaw
N. Slow/Normal detent ball hole
P. High Low detent ball hole
R. First/Reverse detent ball hole
S. Second/Third detent ball hole

1210 TRACTOR WITH A CAB

DISASSEMBLY OF GEARBOX

For procedure for a tractor without a cab see page 39.

1. Fasten the gearbox to the stand as shown in Figure 1.
2. Select any forward gear and put a soft metal punch between the teeth of the layshaft and the casing.
3. Use a $1\frac{11}{16}$ AF socket to remove the nut from the pinion shaft.

   Turn the nut clockwise, it has a left-hand thread, and is very tight.

   Remove the washer and front bearing cone.
4. Put a bar under the slow/normal selector rod A as a support. Use a hammer and punch to remove the pins which fasten the fork B and jaw C to the rod.
5. Put a finger over the hole N for the detent ball to prevent the loss of the ball.

   Slide the selector rod out through the front.

   Remove the detent ball from the rod hole in the end plate.
6. Select SECOND gear, remove the four nuts from the casing bolts and studs.

   Remove the two top bolts out through the front.
7. Hold the SECOND gear in the engaged position. Put a finger over the holes for the detent ball to prevent the loss of the ball.

   Pull the front end plate forward until it is clear of the second/third selector rod G.

   Remove the detent ball from the rod hole in the plate.

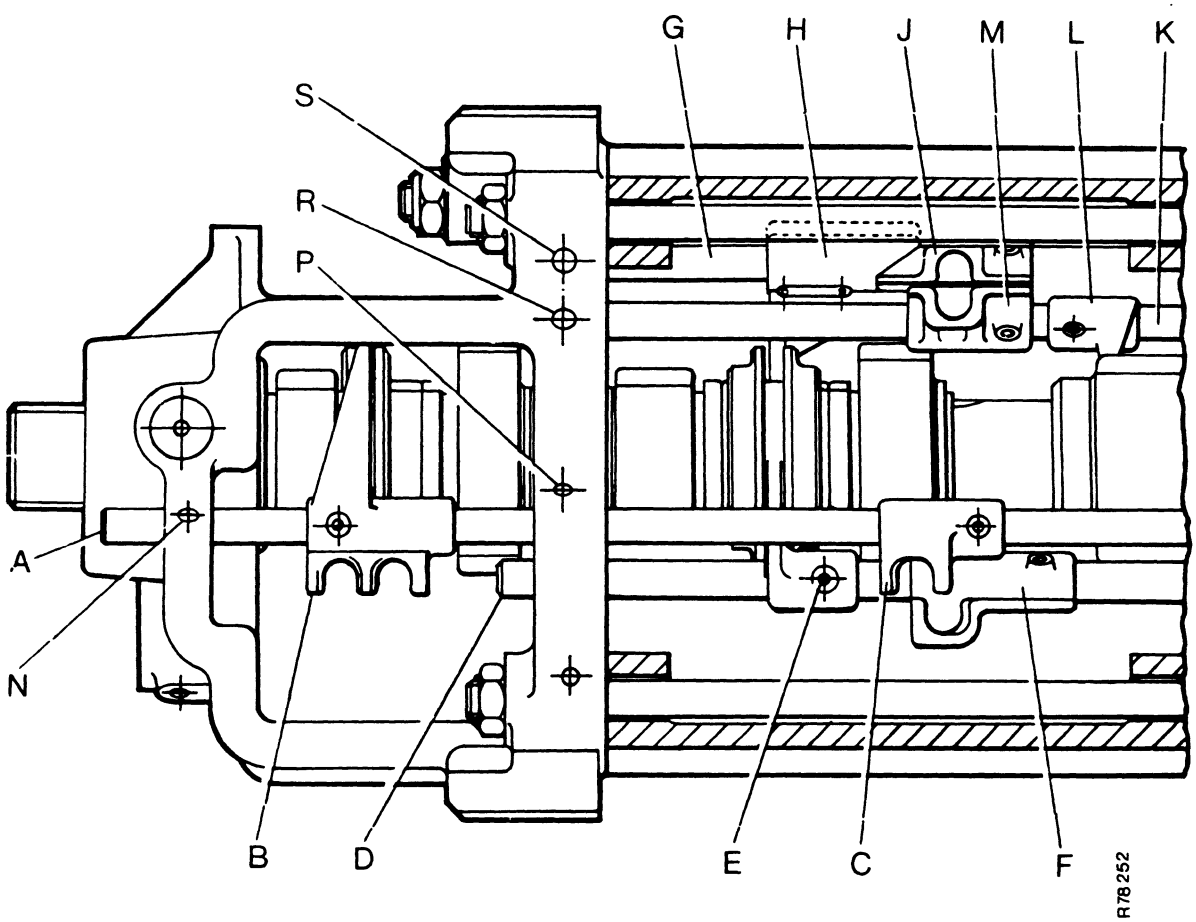

FIGURE 71. ARRANGEMENT OF SELECTORS

A. Slow/Normal rod
B. Slow/Normal fork
C. Slow/Normal jaw
D. High/Low rod
E. High/Low fork
F. High/Low jaw
G. 2nd/3rd rod
H 2nd/3rd fork
J. 2nd/3rd jaw
K 1st/Rev. rod
L. 1st/Rev. fork
M. 1st/Rev. jaw
N. Slow/Normal detent ball hole
P. High/Low detent ball hole
R. First/Reverse detent ball hole
S. Second/Third detent ball hole

8. Select REVERSE gear.
   Put a finger over the hole R, Figure 71 for the detent ball to prevent the loss of the ball.
   Pull the front plate forward until clear of the first/reverse selector rod K.
   Remove the detent ball from the rod hole in the plate.
9. Put a finger over the hole P for the detent ball of the high/low selector rod.
   Push the high/low selector rod toward the rear end plate.
   Pull the front plate forward until clear of the rod.
   Remove the detent ball.
10. Remove the front plate and the slow/normal gears. Remove the slow/normal driven gear M, Figure 72 and selector from the front plate.
    Remove the spring pin G which holds the layshaft spindle N and remove the spindle.
11. Remove the circlip B from the front end of the slow/normal input shaft.
    Push the input shaft out of the front plate from the front. Keep the layshaft clear while doing this.
12. Remove the bolt which holds the rear bearing for the topshaft in position.
    The washer will fall inside the casing; remove later.

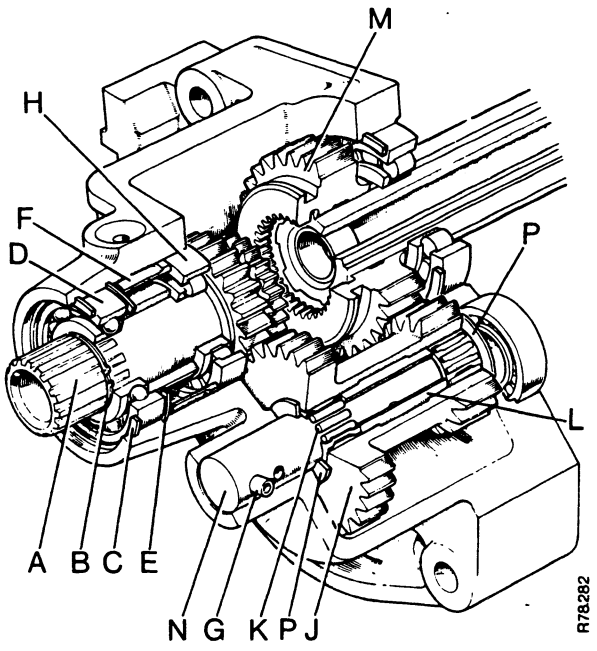

FIGURE 72. SLOW/NORMAL GEARS

A. Input shaft
B. Circlip (gear)
C. Outer circlip
D. Bearing
E. Inner circlip
F. Distance piece
G. Spring pin
H. Roller bearing
J. Layshaft
K. Needle bearing
L. Distance piece
M. Driven gear
N. Layshaft spindle
P. Thrust washers

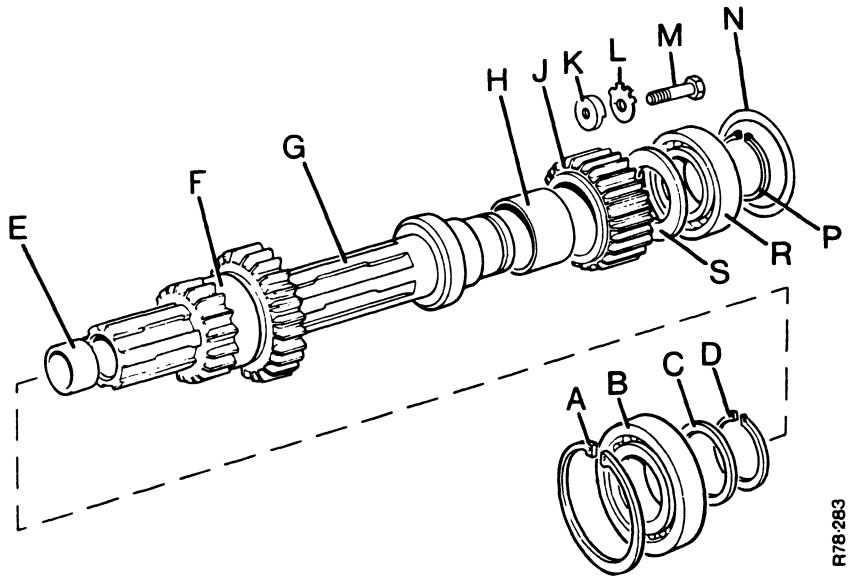

FIGURE 73. TOP-SHAFT ASSEMBLY 1210 TRACTOR

A. Circlip
B. Front bearing
C. Distance piece
D. Circlip
E. Bush
F. Range pinion
G. Shaft
H. Bush
J. Reverse idler gear
K. Washer, rear bearing
L. Tabwasher
M. Bolt
N. Shims
P. Circlip
R. Rear bearing
S. Thrust washer

13. Move the casing spacer forward approximately 25 mm.
    Remove the topshaft complete and the high/low selector assembly.
    Remove the shims from behind the rear bearing and keep safe for assembly.
14. Remove the layshaft from the casing.
15. To remove the pinion shaft, first remove the differential.
    Make marks on the bearing caps and the rear end plate to make sure of correct assembly.
    Remove the bearing caps while holding the weight of the unit.
16. Remove the two distance pieces and the shims from the front of the pinion shaft. Keep shims safe for assembly.
17. Remove the splined washer, third gear and the six bearing pads, from the pinion shaft.
18. Move the synchroniser unit and the front dog gear forward as far as possible. Release the circlip behind the front dog gear from the groove and slide the circlip forward.
19. Slide the rear dog gear and second gear forward. Remove circlip from rear groove on early tractors and slide forward on later tractors.
20. Slide the first/reverse gear and selector forward until the selector rod is clear of the rear plate. Lift the selector assembly out.
21. Remove the selector assembly for second and third gears.
22. Lift the front of the pinion shaft and remove all the components from the front.
    Remove the pinion shaft from the rear.
23. Remove the washer for the topshaft rear bearing from the bottom of the casing.
24. If necessary, disassemble the topshaft in the following sequence.
    (a) Front bearing, washer and circlip.
    (b) High/Low gear assembly.
    (c) Rear circlip and bearing, thrust washer and reverse idler gear.

Inspection of Parts

Clean all parts and check for wear and damage. See pages 42 and 43 for details.

Adjustments

Do the adjustments on pages 44 to 48 before assembling the gearbox.

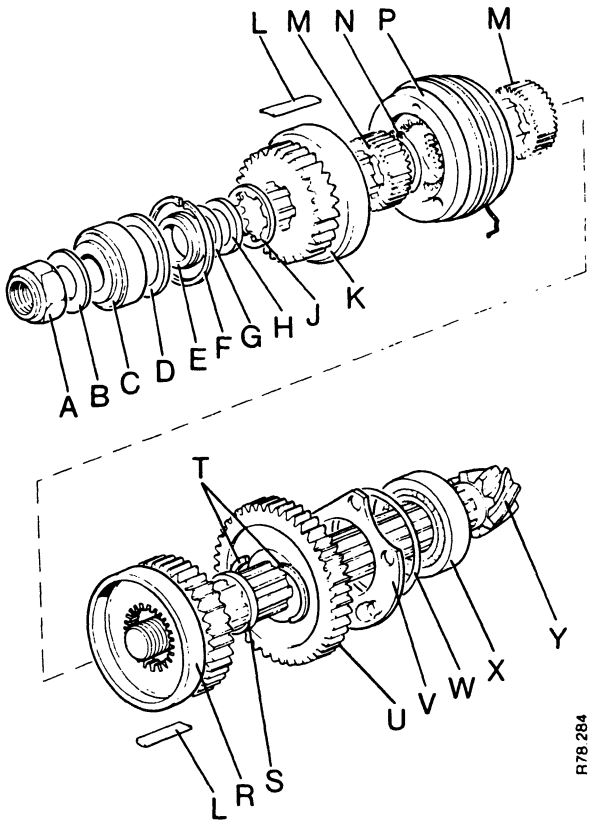

FIGURE 74. BEVEL PINION SHAFT ASSEMBLY

A.	*Nut*	*M.*	*Dog gears*
B.	*Washer*	*N.*	*Circlip*
C.	*Bearing, front*	*P.*	*Synchroniser*
D.	*Distance piece*	*R.*	*Second gear*
E.	*Distance piece*	*S.*	*Special washer*
F.	*Circlip*	*T.*	*Split-ring*
G.	*Shims*	*U.*	*First/Reverse gear*
H.	*Distance piece*	*V.*	*Plate*
J.	*Splined washer*	*W.*	*Shims*
K.	*Third gear*	*X.*	*Bearing, rear*
L.	*Bearing pad (6)*	*Y.*	*Shaft*

NOTE: Items S and T installed instead of circlip from serial number 729430 on 1210 tractors.

25 mm = 1 in

ASSEMBLY see Figure 74

1. Install the casing spacer so that the front face is level with the ends of the bottom studs.
2. Remove the circlip and bearing from the rear end of the topshaft. Install the bearing in the rear end plate complete with the correct amount of shims. See page 46 for adjustment.

   Install the bolt and special washer to hold the bearing in position. Use a new tabwasher on the bolt.
3. Install the pinion shaft and differential. Use a wedge of wood to hold pinion shaft in position.
4. Slide the first/reverse gear onto the pinion shaft. Make sure the selector groove is towards the rear end plate.
5. On early tractors install the rear circlip on the shaft but not in groove.
6. Put the second gear R on the pinion shaft with the synchromesh surface towards the front. Install the six bearing pads L with a small amount of grease.
7. Put the rear dog gear on the pinion shaft. Make sure the thin part of the teeth is towards the front. Make a note of the position of the mark on the side of the gear.
8. Slide the circlip N on to the pinion shaft but not into the groove.
9. Install the front dog gear, with the thin part of the teeth towards the rear end plate. Align the mark on the side of the gear with the mark on the rear dog gear.
10. Install the synchroniser unit P, onto the dog gears.
11. Install the selector assembly for second and third gears. Do not enter the rod into the rear end plate.
12. Install the selector assembly for first and reverse gears. Enter the rod into the rear end plate. Move the casing spacer towards the rear approximately 50 mm at the same time.

    Put the split ring T in the groove on the pinion shaft and slide the special washer S over the ring.
13. Push the synchroniser unit P, dog gears M, circlip N and second gear R, towards the rear. Enter the selector rod for second and third gears into the rear end plate. Keep pushing until the circlip between the dog gears, enters the groove on the shaft.

    Check that the circlip has entered the groove by pulling the second gear forward. The gear will not move forward if the circlip is in the groove.
14. Install the third gear K, with the synchromesh surface towards the rear. Put grease on the six bearing pads and push into position.
15. Put grease on one side of the splined washer J. Put the washer on the pinion shaft with the grease against third gear.
16. Put the layshaft in position inside the casing spacer.
17. Assemble the top shaft as follows, see Figure 75.
    (a) Put the range Pinion F on the topshaft, small gear to front.
    (b) Install circlip D and washer C on the front of the shaft.
    (c) Install bush H, idler gear J and thrust washer S, on to the rear of the shaft.

50 mm = 2 in

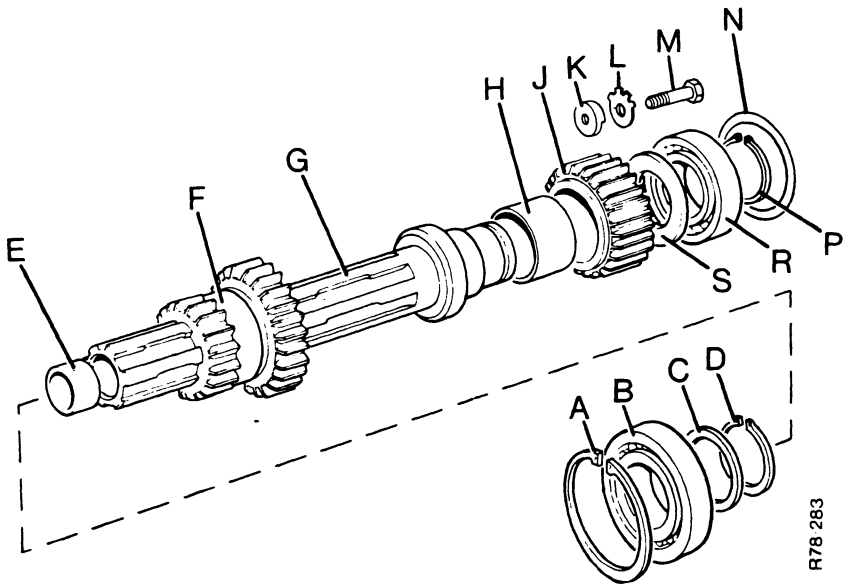

FIGURE 75.
TOPSHAFT ASSEMBLY 1210 TRACTOR

A. Circlip
B. Front bearing
C. Distance piece
D. Circlip
E. Bush
F. Range pinion
G. Shaft
H. Bush
J. Reverse idler gear
K. Washer, rear bearing idler
L. Tabwasher, rear bearing idler
M. Bolt, rear bearing idler
N. Shims
P. Circlip
R. Rear bearing
S. Thrust washer

18. Put the topshaft complete and the selector assembly in position inside the casing spacer. Enter the end of the topshaft and selector rod into the rear end plate.
19. Move the spacer toward the rear end plate. Enter the rear bearing of the layshaft into the end plate. Hit the front of the topshaft with a soft face hammer to push it into the rear bearing. Install the circlip on the rear end of the topshaft when in position.
20. Remove the outer cup of the front bearing for the topshaft from the front plate. Install the cup onto the bearing cone on the shaft.
21. Install the slow/normal layshaft large gear toward the front.

    Do not install the spindle until the driving gear is installed.
22. Push the driving gear assembly into the front plate from the rear. Install the circlip on the front end.
23. Put all the springs for the detent balls in the front end plate. Put the gear lock in position.

    NOTE: The range selector rods do not have a gear lock.

    Install layshaft spindle and spring pin.
24. Put the front end plate onto the bottom studs and move it towards the spacer.

    Do this until the driven gear M Figure 72 can be put on the topshaft. Install the gear with the selector groove toward the front.
25. Enter the first/reverse selector rod into the front end plate. Use the tool shown in Figure 76 to install the detent ball as follows:
    Put the flat of the tool towards the end of the selector rod. Push the tool down and push the rod up to the flat. Remove the tool and push the rod over the ball.
26. Push the front end plate toward the spacer. Push the first/reverse selector rod forward until the gear lock enters the groove, NEUTRAL POSITION.
27. Enter the selector rod for second and third gears into the front plate. Use the tool to install the detent ball. Move the selector rod forward.
28. Put the selector rod for high/low in position. Use the tool to install the detent ball and move the rod forward.
29. Enter the layshaft and topshaft bearings into the front end plate. Use a soft face hammer to hit the front plate until it is against the spacer.
30. Install the two top casing bolts from the front. Install the four Nyloc nuts and tighten to 95 Nm.
31. Engage reverse gear and put a soft metal punch between the layshaft and the case. Make sure the splined washer is still in position.
32. Install the front bearing, the two distance pieces with the shims between, onto the pinion shaft. Make sure the small face of the front distance piece is toward the front bearing.

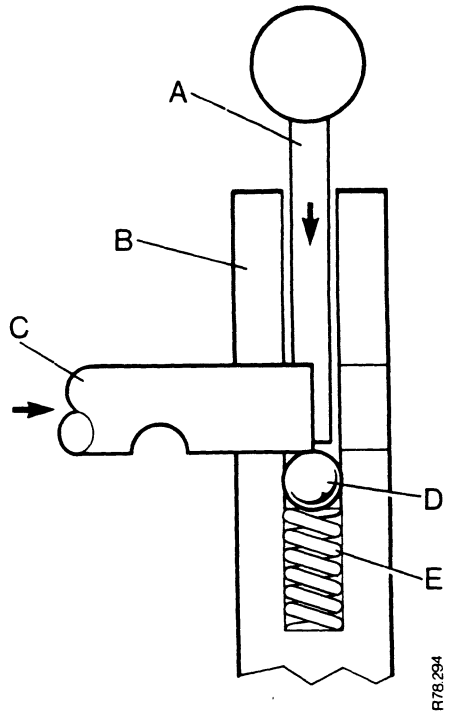

FIGURE 76. INSTALLING DETENT BALLS

A. Tool
B. End plate
C. Selector rod
D. Detent ball
E. Detent spring

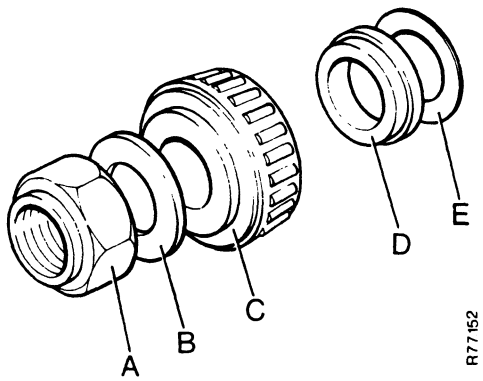

FIGURE 77. PINION SHAFT NUT

A. Nut
B. Washer
C. Bearing
D. Special distance piece with shoulder
E. Shims

95 Nm = 10 kg m = 70 lb ft

33. Install the washer and nut onto the pinion shaft. NOTE: There must be at least 1½ threads showing through the nut. Check splined washer is in position if less, before tightening the nut. Tighten the nut counter-clockwise to 271 Nm.
34. Put all gears in neutral and then select high or low range.
35. Put the slow/normal selector fork into the selector groove. Enter the selector rod in the front plate and use the tool to install the detent ball. Push the rod toward the rear through the fork and selector jaw.
36. Align the holes in the rod, fork and jaw. Install the pins which fasten the fork and jaw.
37. Install the balls and plunger for the starter safety switch.

271 Nm = 28 kg m = 200 lb ft

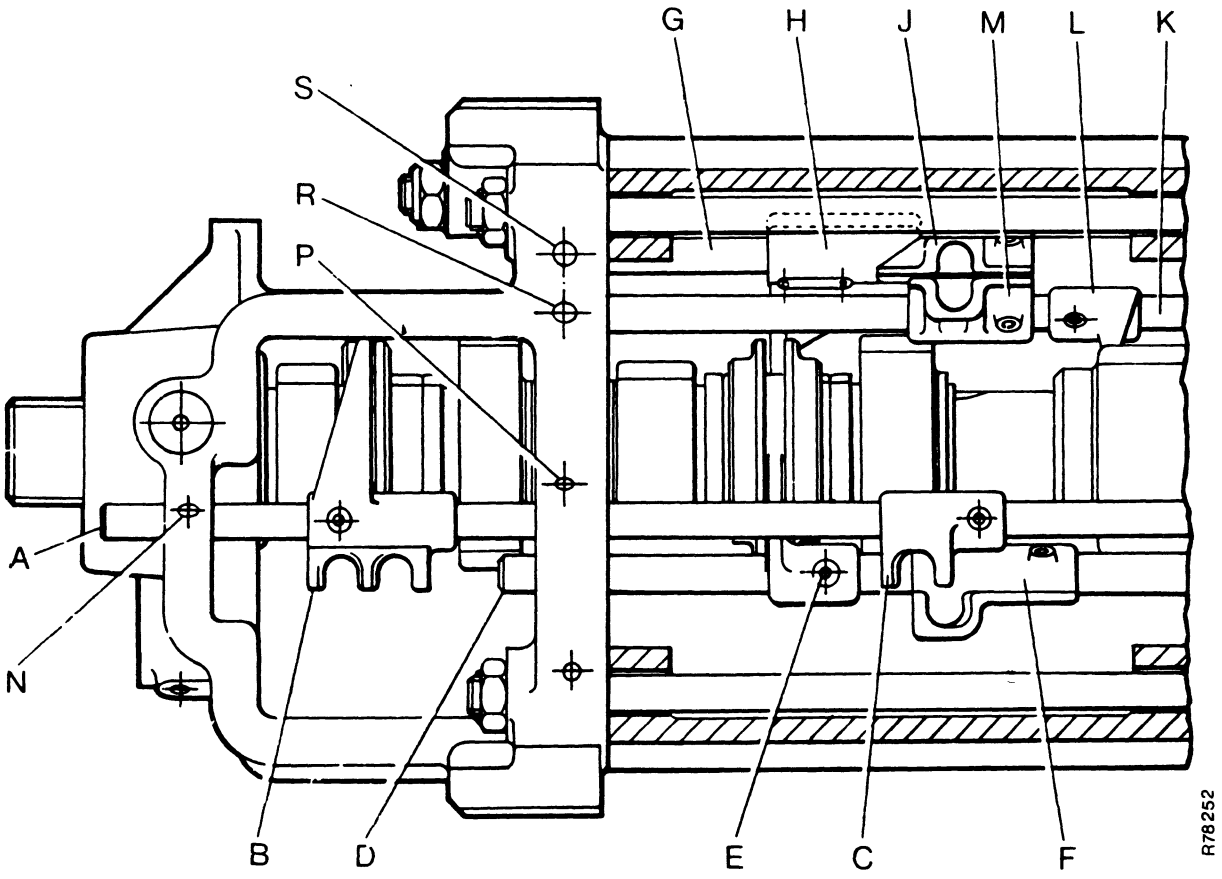

F GURE 78. ARRANGEMENT OF SELECTORS

A. Slow/Normal rod
B. Slow/Normal fork
C. Slow/Normal jaw
D. High/Low rod
E. High/Low fork
F. High/Low jaw
G. 2nd/3rd rod
H. 2nd/3rd fork
J. 2nd/3rd jaw
K. 1st/Rev rod
L. 1st/Rev fork
M. 1st/Rev jaw
N. Slow/Normal detent ball hole
P. High/Low detent ball hole
R. First/Reverse detent ball hole
S. Second/Third detent ball hole

1410 TRACTOR WITHOUT A CAB

DISASSEMBLY OF GEARBOX

For procedure for tractor with a cab, see page 66.

1. Install the gearbox in the stand as shown in Figure 1.
2. Remove the circlip A and washer B, Figure 79, which holds the front bearing for the input shaft assembly in position.
3. Align the gap in the teeth of the driving gear with the teeth of the layshaft.

   Pull the input shaft assembly out through the front of the front end plate.
4. Remove the circlip K, Figure 79, from the front of the topshaft. Move the dog clutch gear L, forward as far as possible.
5. Remove the pin which fastens the slow/normal selector fork to the selector rod. See Figure 78.
6. Pull the slow/normal rod out through the front and remove the fork. Put a finger over hole N for the detent ball to prevent loss of the ball. Remove the ball through the selector rod hole.
7. Remove the pin which fastens the selector jaw to the high/low selector rod.
8. Remove the pins which fasten the selector jaw and fork to the second/third selector rod. Put a finger over hole S for the detent ball to prevent loss of the ball. Pull the rod out through the front, while holding the jaw.

   Remove the detent ball through the selector rod hole.
9. Engage first gear and remove the pin which fastens the jaw to the first/reverse selector rod. Put a soft metal punch between the layshaft gears and the casing.
10. Remove the pinion shaft nut, washer and front bearing. Turn the nut clockwise, it has a left-hand thread and is very tight.
11. Remove the four Nyloc nuts from the casing bolts and studs. Remove the two top bolts, towards the front.
12. Push the high/low and first/reverse selector rods to the rear as far as possible. Pull the front end plate forward.
13. Remove the front end plate complete with the components inside. Put your hand over the holes for the detent balls while pulling the end plate forward. Remove the first/reverse selector jaw as the rod clears it.

    Remove the detent balls.

    NOTE: Make sure the high/low and first/reverse rods do not move forward while removing the front plate.
14. Remove the driven gear M, Figure 79, dog clutch gear, slow/normal selector and fork, high/low and first/reverse jaws.

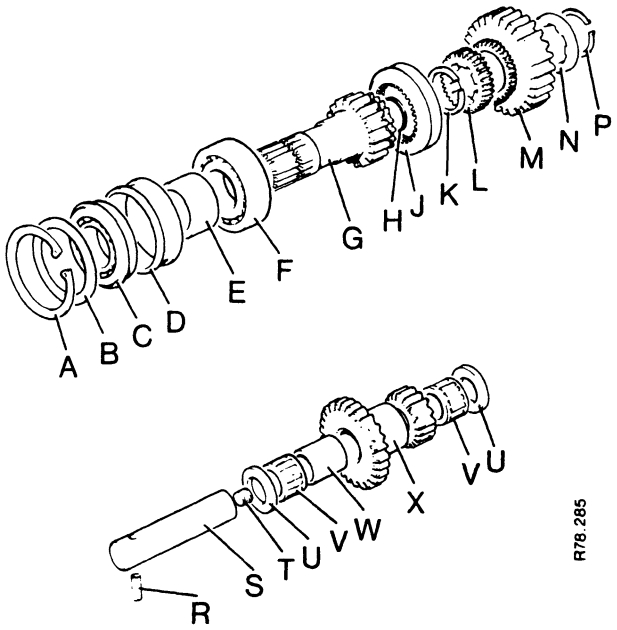

FIGURE 79. SLOW/NORMAL GEARS 1410 TRACTOR TRACTOR

A. Circlip
B. Washer
C. Bearing, front
D. Distance piece
E. Distance piece
F. Bearing, rear
G. Input shaft
H. Dog gear, front
J. Selector gear
K. Circlip
L. Dog gear, rear
M. Driven gear
N. Splined washer
P. Circlip
R. Pin
S. Spindle
T. Plug
U. Thrust washers
V. Needle bearings
W. Distance piece
X. Layshaft gears

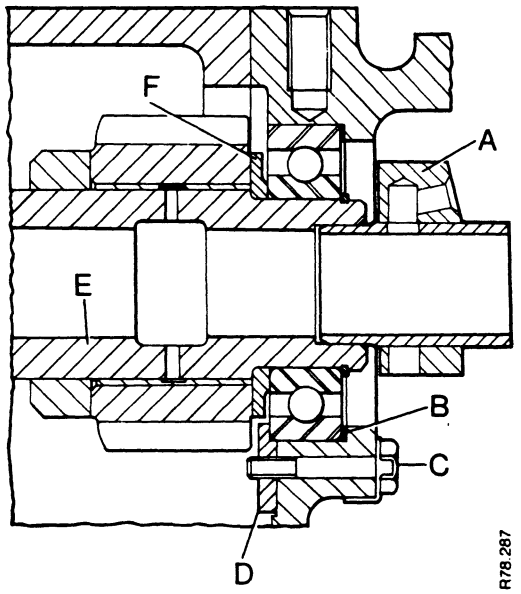

FIGURE 80. TOP SHAFT REAR END

A. Lubrication muff
B. Shims
C. Bolt
D. Special washer
E. Top shaft
F. Thrust washer

15. Remove the gear locks and detent springs from the front end plate.
16. Remove the lubrication muff A Figure 80 from the rear of the topshaft.
17. Remove the bolt which holds the topshaft rear bearing in position. The washer will fall inside the casing, remove later.
18. Remove the topshaft complete and high/low selector rod and fork.
19. Remove the layshaft and pull the casing spacer forward approximately 25 mm.
20. Remove the distance pieces, shims G and splined washer J, from the front of the pinion shaft. Keep safe, the shims are important when assembling. See Figure 81.
21. Remove the third gear K, and the six bearing pads L, from the pinion shaft.
22. Move the synchroniser unit P, selector fork and front dog clutch gear as far forward as possible. Release the circlip N, behind the front dog clutch gear and move it forward along the shaft.
23. Move the second gear R, and rear dog clutch gear forward as far as possible.
24. Move the special washer S, which holds the split ring T, in position forward and remove the split ring.
25. Move the first/reverse gear U, forward and remove the selector rod and fork.
26. Remove from the pinion shaft:
    (a) the synchroniser unit and selector fork,
    (b) dog clutch gears and circlip,
    (c) second gear and bearing pads,
    (d) split-ring washer and first/reverse gear.
27. Remove the special washer for the topshaft rear bearing from the casing.

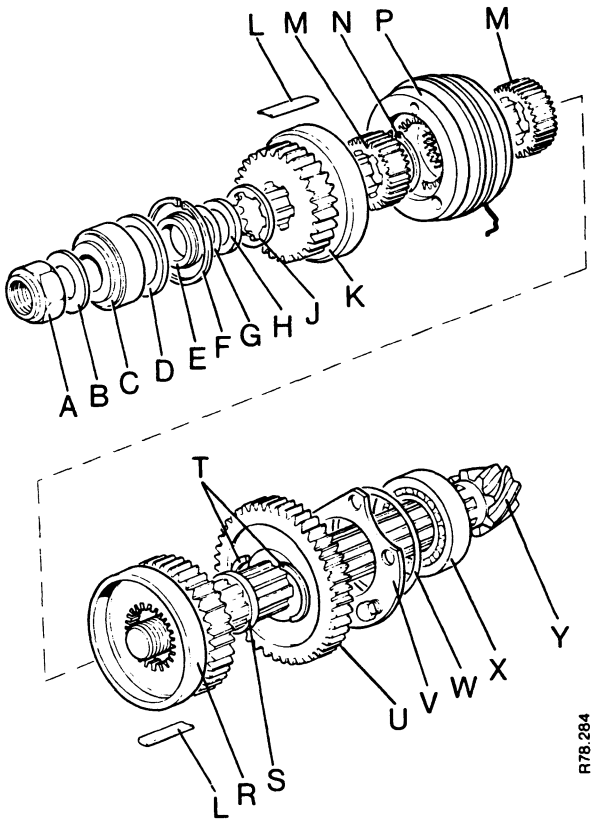

FIGURE 81. BEVEL PINION SHAFT ASSEMBLY

A.	*Nut*	*M.*	*Dog gears*
B.	*Washer*	*N.*	*Circlip*
C.	*Bearing, front*	*P.*	*Synchroniser unit*
D.	*Distance piece*	*R.*	*Second gear*
E.	*Distance piece*	*S.*	*Special washer*
F.	*Circlip*	*T.*	*Split ring*
G.	*Shims*	*U.*	*First/reverse gear*
H.	*Distance piece*	*V.*	*Plate*
J.	*Splined washer*	*W.*	*Shims*
K.	*Third gear*	*X.*	*Bearing, rear*
L.	*Bearing pad (6)*	*Y.*	*Shaft*

25 mm = 1 in

28. To remove the slow/normal layshaft, first remove the spring pin which holds the spindle in position.

    Push the spindle out and lift the layshaft out of the end plate.

    Remove the thrust washers.

    Remove the bearings and distance piece from the layshaft. See Figure 79.

29. Disassemble the topshaft as follows if necessary; see Figure 82.

    Remove:

    (a) front splined washer and circlip A.
    (b) front bearing B, and bush C.
    (c) low gear D, sliding gear E, and front dog clutch gear F, six bearing pads J.
    (d) circlip G, and rear dog clutch gear H,
    (e) high gear K, and six bearing pads R.
    (f) splined washer L, and circlip M,
    (g) rear circlip W, and bearing V,
    (h) thrust washer U, reverse gear T, and bush S.

30. To remove the pinion shaft, remove the differential unit as follows:

    (a) Make a mark on one of the differential bearing caps and the end plate to make sure of correct assembly.
    (b) Remove the bearing caps while holding the weight of the unit.
    (c) Remove the differential unit.
    (d) Remove the pinion shaft from the rear.

    NOTE: **DO NOT** mix, or cause damage to the bearing caps and adjuster rings.

Inspection of Parts

Check all parts for wear and damage after cleaning. See pages 42 and 43.

Adjustments

Do the adjustments on pages 44 to 48 before assembling the gearbox.

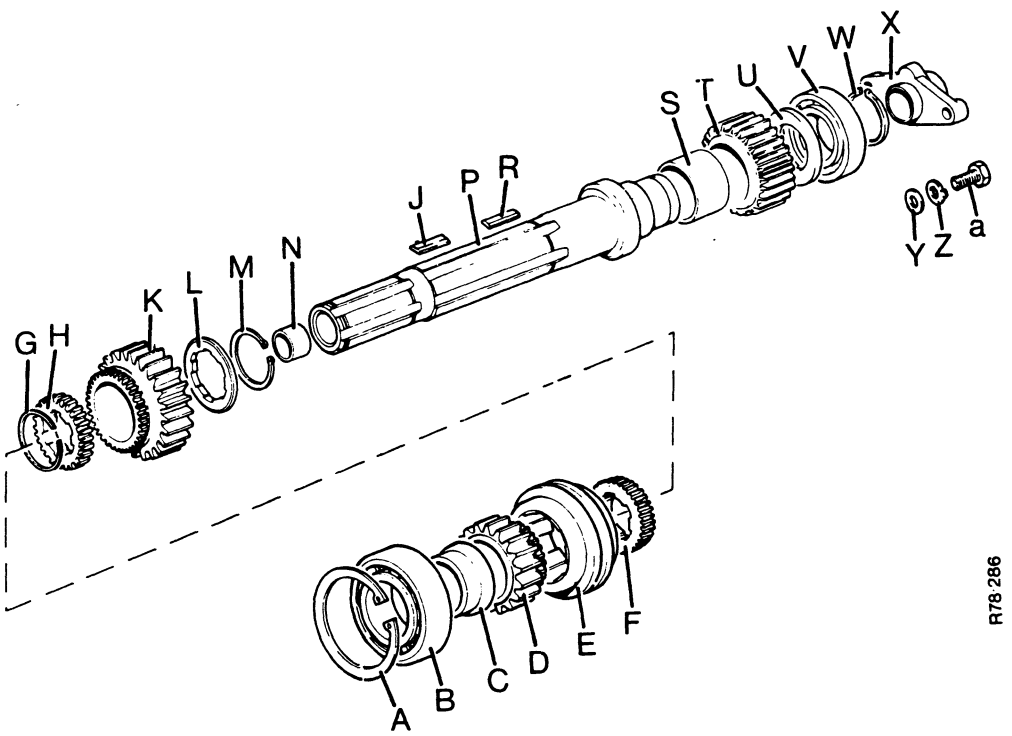

FIGURE 82. TOPSHAFT ASSEMBLY 1410 TRACTOR

A. Circlip	*J. Bearing pad (6)*	*T. Reverse idler gear*
B. Bearing, front	*K. Low range gear*	*U. Thrust washer*
C. Distance piece	*L. Splined washer*	*V. Bearing, rear*
D. High range gear	*M. Circlip*	*W. Circlip*
E. Selector gear	*N. Bush*	*X. Lubrication muff*
F. Dog gear	*P. Topshaft*	*Y. Washer, rear bearing*
G. Circlip	*R. Bearing pad (6 off)*	*Z. Tabwasher, rear bearing*
H. Dog gear, rear	*S. Bush*	*a. Bolt, rear bearing*

ASSEMBLY

1. Remove the circlip and bearing from the rear end of the topshaft if still fitted. Press the bearing into the rear end plate, with the correct amount of shims behind it.

   Install the bolt and washer which holds the bearing in position. Use a new tabwasher to lock the bolt.
2. Slide the casing spacer on the bottom studs until the front face is level with the stud ends.
3. Install the pinion shaft and differential. Make sure caps and adjuster rings are correctly installed.
4. Assemble the pinion shaft components in the following sequence: see Figure 83.
   (a) first/reverse gear U, selector groove toward the rear,
   (b) special washer S, flat face toward the front,
   (c) second gear R, synchromesh cup toward the front, and the six bearing pads L, with grease,
   (d) rear dog gear, thin part of the teeth toward the front.

   NOTE: Make a note of the position of the mark on the side face of the gear.
   (e) circlip N, (Not in groove),
   (f) front dog gear, thin part of the teeth toward the rear.

   Align the mark on the side face with the mark on the rear dog-gear.
   (g) synchroniser unit P, and selector fork,
   (h) first/reverse selector rod and fork.
5. Enter the first/reverse selector rod into the rear end plate and push the casing spacer toward the rear.
6. Put the split-ring T into the groove on the pinion shaft. Move the special washer S, toward the rear to hold the split-ring in position.
7. Push the synchroniser unit, dog gears and circlip toward the rear until the circlip enters the groove.

   Check that the circlip N, has entered the groove by pulling the second gear R, forward. It will not move if the circlip has entered the groove.
8. Install the third gear K. Put grease on the six bearing pads and install.
9. Put a small amount of grease on one side face of the splined washer J.

   Install the washer on to the shaft, grease against third gear.
10. Put the layshaft into position inside the spacer.

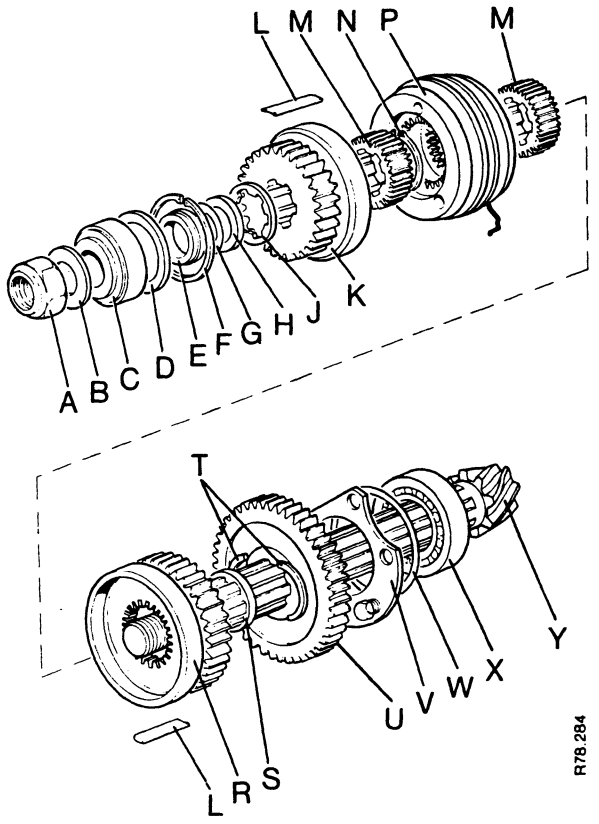

FIGURE 83. BEVEL PINION SHAFT ASSEMBLY

A.	*Nut*	*M.*	*Dog gears*
B.	*Washer*	*N.*	*Circlip*
C.	*Bearing, front*	*P.*	*Synchroniser unit*
D.	*Distance piece*	*R.*	*Second gear*
E.	*Distance piece*	*S.*	*Special washer*
F.	*Circlip*	*T.*	*Split ring*
G.	*Shims*	*U.*	*First/Reverse gear*
H.	*Distance piece*	*V.*	*Plate*
J.	*Splined washer*	*W.*	*Shims*
K.	*Third gear*	*X.*	*Bearing, rear*
L.	*Bearing pad (6)*	*Y*	*Shaft*

11. Assemble the topshaft as follows; see Figure 84.
    (a) Put the circlip M, and the splined washer L, on the shaft from the front.
    (b) Install the high range gear K and bearing pads, dog teeth toward the front.
    (c) Install dog gear H, with the thin part of the teeth toward the front. Make a note of the mark on the side of the gear.
    (d) Install the circlip G.
    (e) Install the dog gear F, with the thin part of the teeth toward the rear. Align the mark on the side with the rear dog gear.
    (f) Slide the dog clutch E, over the dog gears.
    (g) Install the low range gear D, and distance piece C.
2. Put the topshaft complete with the high/low selector fork into position in the spacer.
13. Enter the rear end of the topshaft and the selector rod into the rear end plate.
14. Move the spacer and layshaft toward the rear. Enter layshaft into the rear bearing.
15. Hit the front end of the topshaft with a soft face hammer to push it into the rear bearing. Install the circlip on the rear end of the shaft when the shaft is in correct position.
16. Install the lubrication muff X, to the rear end of the topshaft. DO NOT tighten the nuts completely, permit a free movement of 0·8 mm.
17. Remove the outer cup of the topshaft front bearing from the front end plate. Install the cup on to the bearing cone on the top shaft.

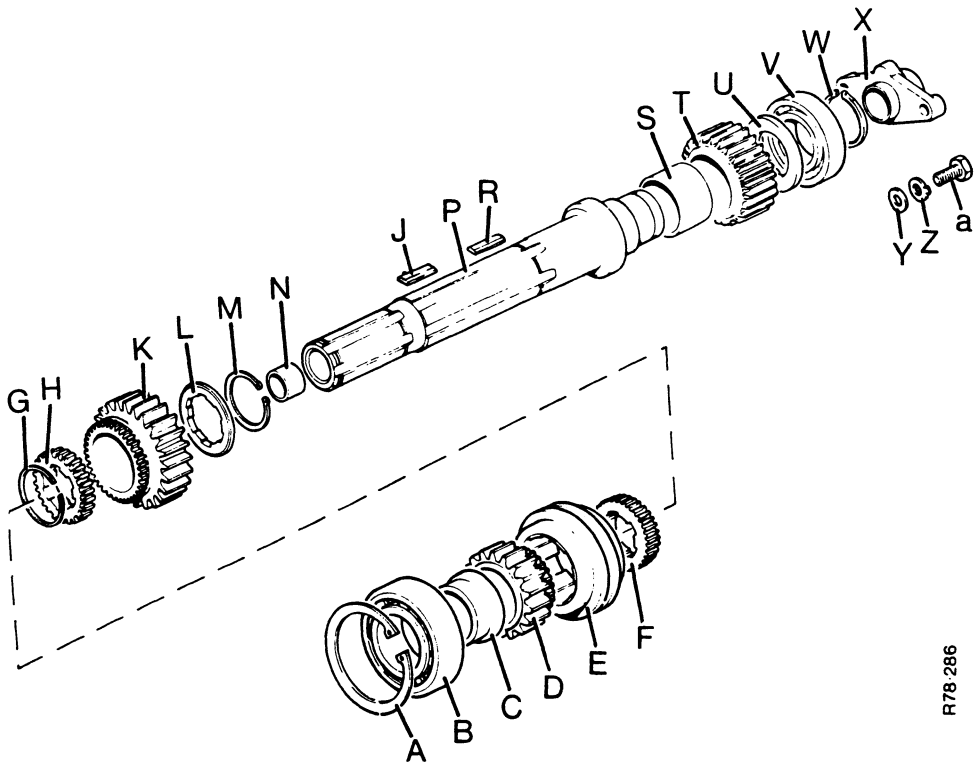

FIGURE 84. TOPSHAFT ASSEMBLY 1410 TRACTOR

A. Circlip
B. Bearing, front
C. Distance piece
D. High range gear
E. Selector gear
F. Dog gear
G. Circlip
H. Dog gear, rear
J. Bearing pad (6)
K. Low range gear
L. Splined washer
M. Circlip
N. Bush
P. Topshaft
R. Bearing pad, (6 off)
S. Bush
T. Reverse idler gear
U. Thrust washer
V. Bearing, rear
W. Circlip
X. Lubrication muff
Y. Washer, rear bearing
Z. Tabwasher, rear bearing
a. Bolt, rear bearing

0·76 mm = 0·030 in

18. Engage reverse gear. Install the gear locks and detent springs into the front end plate.
    Install the slow/normal layshaft.
19. Put the front plate into position and enter the high/low selector rod. Install the detent ball.
20. Put the end plate toward the rear, enter the first/reverse selector rod into the end plate. Install the detent ball.
21. Install the jaws for high/low and first/reverse onto the selector rods.
22. Push the front end plate toward the rear until the slow/normal driven gear can be installed. Install the six bearing pads.
23. Install slow/normal selector ring and fork.
24. Install the dog clutch gear onto the topshaft, thin part of teeth toward the front.
25. Install the high/low and slow/normal gear locks into the end plate. Push the spacer fully backward against the rear end plate.
26. Push the front end plate toward the rear, entering the topshaft and layshaft front bearings. Push the plate against the spacer.
27. Install the circlip on the front of the topshaft.
28. Put the top casing bolts in position from the front. Install the Nyloc nuts on to the bolts and bottom studs and tighten to 95 Nm.
29. Install the pins which fasten the selector jaws to the selector rods for high/low and first/reverse.
30. Select reverse gear. Check that the splined washer is still in position on the front of the pinion shaft.
31. Install the distance pieces, shims, bearing, washer and nut onto the pinion shaft.
    Make sure the small end of the front distance piece is toward the front. Tighten the nut counterclockwise (left-hand thread) to a torque of 271 Nm.
    NOTE: Check that at least one and a half threads are showing through the nut before tightening. If there is less, check splined washer location again.

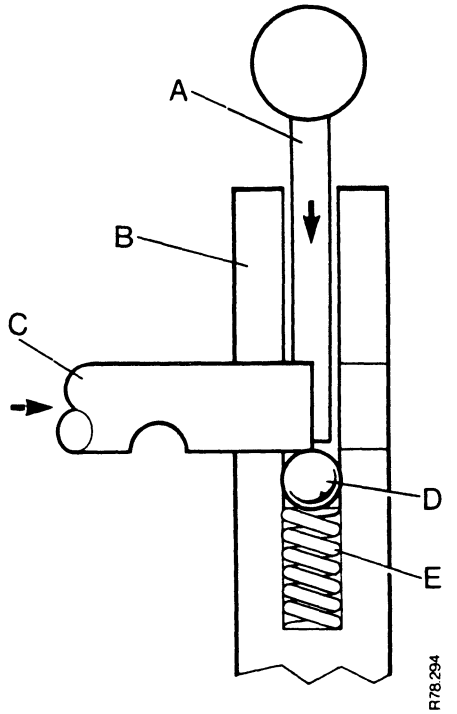

FIGURE 85. INSTALLING DETENT BALLS

A. Tool
B. End plate
C. Selector rod
D. Detent ball
E. Detent spring

95 Nm = 10 kg m = 70 lb ft
271 Nm = 28 kg m = 200 lb

32. Select the neutral position for first/reverse.
33. Install the second/third selector rod G, through the front end plate, jaw and fork. Install the pins which fasten the jaw and fork to the selector rod.
34. Select high or low range.
35. Install the slow/normal selector rod A, and detent ball. Install the pin to fasten the slow/normal fork to rod.
36. Install the input shaft assembly complete with bearings. Install circlip and washer.

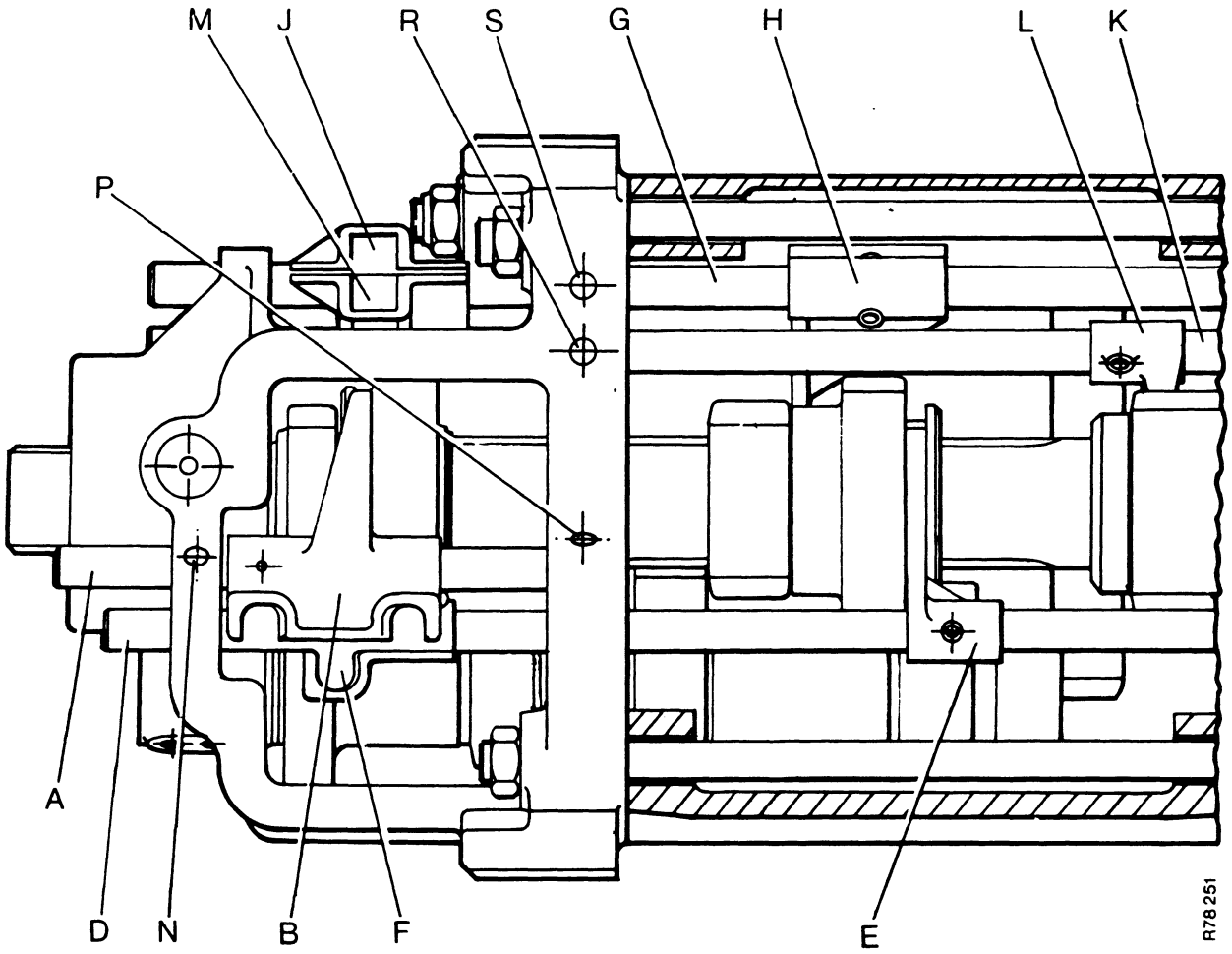

FIGURE 86. ARRANGEMENT OF SELECTORS

A. Slow/Normal rod
B. Slow/Normal fork and jaw
D. High/Low rod
E. High/Low fork
F. High/Low jaw
G. 2nd/3rd rod
H. 2nd/3rd fork
J. 2nd/3rd jaw
K. 1st/Rev. rod
L. 1st/Rev. fork
M. 1st/Rev. jaw
N. Slow/Normal detent ball hole
P. High/Low detent ball hole
R. First/Reverse detent ball hole
S. Second/Third detent ball hole

1410 TRACTOR WITH A CAB

DISASSEMBLY OF GEARBOX

For procedure for a tractor without a cab, see page 59.

1. Fasten the gearbox to the stand as shown in Figure 1.
2. Remove the circlip and washer which holds the front bearing of the input shaft assembly in position.
3. Align the gap in the teeth of the input shaft with the teeth of the slow/normal layshaft. Pull the input shaft assembly forward out of the front end plate.
4. Remove the circlip from the front of the top shaft. Move the dog clutch gear forward as far as possible.
5. Put a bar under the slow/normal selector rod A, as a support. Use a hammer and punch to remove the pins which fasten the selector jaw C, and fork B, to the rod. See Figure 87.
6. Remove the rod forward out through the front end plate. Put a finger over the hole N for the detent ball to prevent loss of the ball.

   Remove the ball through the selector rod hole.
7. Select first gear and put a soft metal punch between the casing and the front gear of the layshaft.
8. Remove the pinion shaft nut clockwise, (it has a left-hand thread) washer and front bearing. Put the first gear in the neutral position and remove the punch from between the casing and the layshaft.
9. Select second gear. Remove the four Nyloc nuts from the casing bolts and studs. Remove the two top bolts.

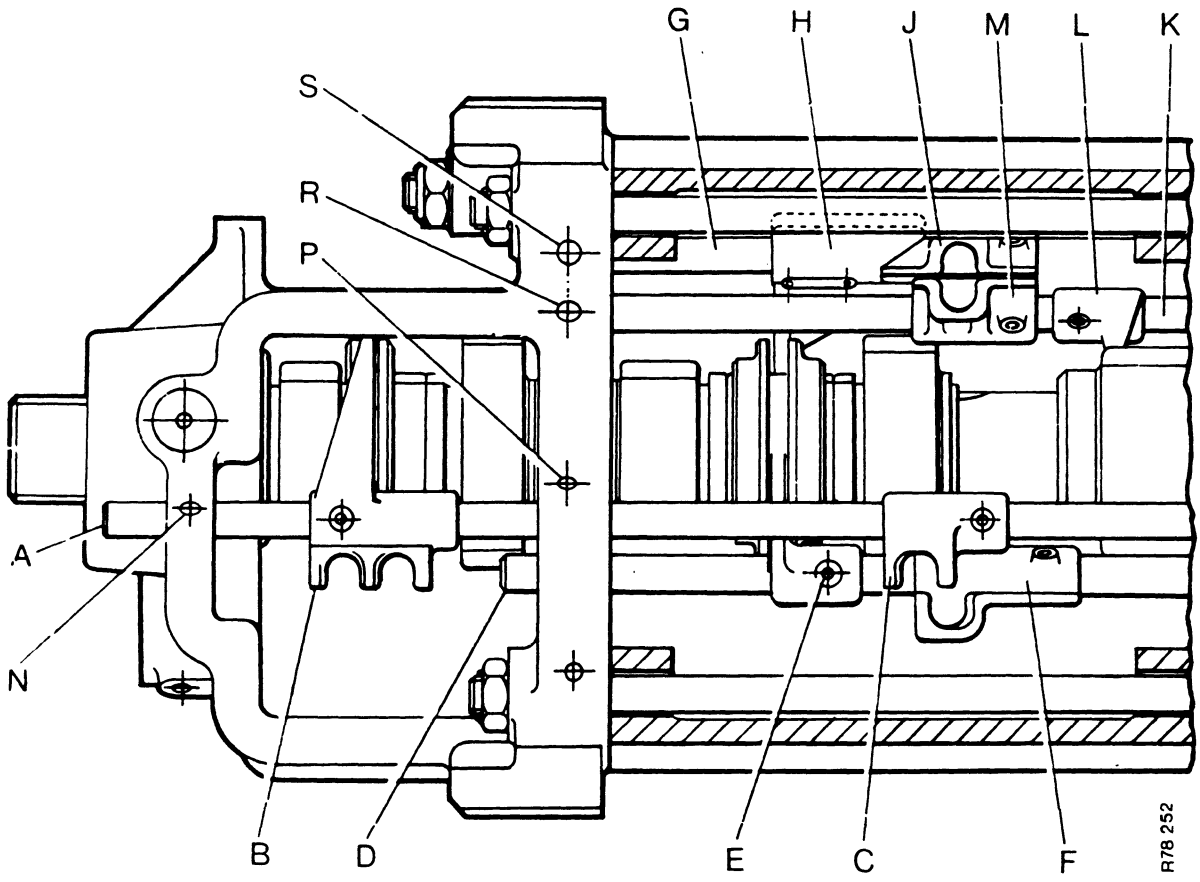

FIGURE 87. ARRANGEMENT OF SELECTORS

A. Slow/Normal rod
B. Slow/Normal fork
C. Slow/Normal jaw
D. High/Low rod
E. High/Low fork
F. High/Low jaw
G. 2nd/3rd rod
H. 2nd/3rd fork
J. 2nd/3rd jaw
K. 1st/Rev. rod
L. 1st/Rev. fork
M. 1st/Rev. jaw
N. Slow/Normal detent ball hole
P. High/Low detent ball hole
R. First/Reverse detent ball hole
S. Second/Third detent ball hole

10. Hold second gear in the engaged position. Put a finger over the hole S, for the detent ball. Pull the front end plate forward until it is clear of the selector rod G, for second and third gears. Remove the detent ball.
11. Select reverse gear. Move front plate forward until it is clear of the first/reverse selector rod K. Put a finger over the hole R, for the detent ball while doing this. Remove the ball out through the selector rod hole.
12. Put a finger over the hole P, for the detent ball for the high/low selector rod. Push the rod D, towards the rear until it is clear of the front plate. Remove the detent ball.

    NOTE: The high/low rod does not have a gear lock.
13. Remove the slow/normal dog gear L, Figure 88 and the sliding selector from the front of the topshaft.
14. Move the front end plate forward until the slow/normal driven gear M, can be removed from the topshaft.

    Remove the gear and the six bearing pads.
15. Remove the front end plate with the slow/normal layshaft in position.

    If it is necessary to remove the layshaft, first remove the pin which fastens the spindle. Push the spindle out of the shaft and front plate. Remove the layshaft assembly and the two thrust washers. Use a press to push the bearings and distance piece out of the layshaft, if necessary.
16. Remove the lubrication muff A, Figure 89, from the rear of the topshaft.
17. Remove the bolt C which holds the rear bearing for the topshaft in position. The washer D will fall inside the casing, remove later.
18. Move the casing spacer forward approximately 25 mm.

    Remove the topshaft complete and the high/low selector assembly.

    Remove the shims from behind the rear bearing and keep safe for assembly.
19. Remove the main layshaft.

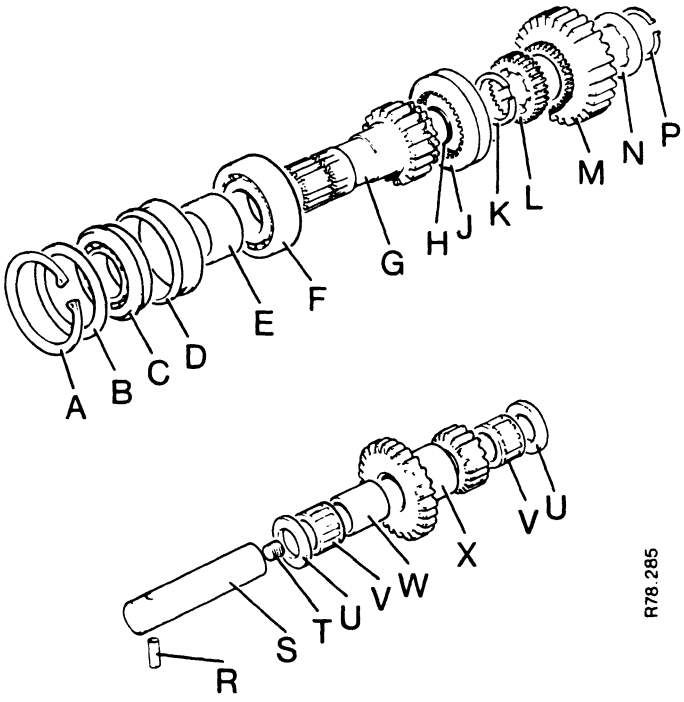

FIGURE 88. SLOW/NORMAL GEARS 1410 TRACTOR

A. Circlip
B. Washer
C. Bearing, front
D. Distance piece
E. Distance piece
F. Bearing, rear
G. Input shaft
H. Dog gear, front
J. Selector gear
K. Circlip
L. Dog gear, rear
M. Driven gear
N. Splined washer
P. Circlip
R. Pin
S. Thrust washers
U. Needle bearing
V. Distance piece
W. Layshaft gears

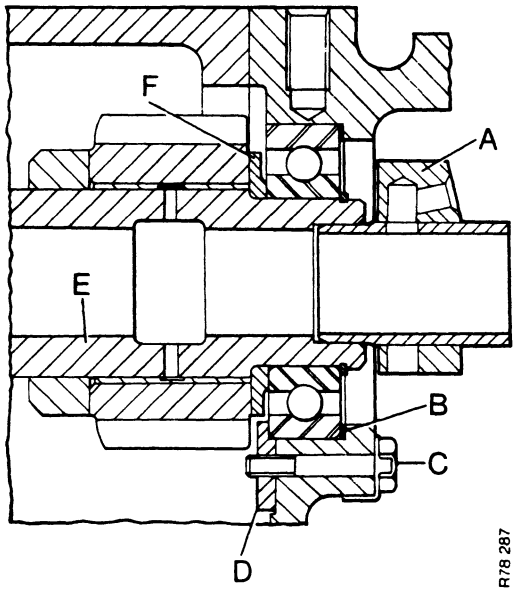

FIGURE 89. TOPSHAFT REAR END

A. Lubrication muff
B. Shims
C. Bolt
D. Washer
E. Topshaft
F. Thrust washer

25 mm = 1 in

See Figure 90.

20. Remove the two distance pieces E and H, and the shims G, from the front of the pinion shaft. Keep the shims safe, these will be needed for assembly.
21. Remove the splined washer J, third gear K, and the six bearing pads L, from the pinion shaft.
22. Move the synchroniser unit and the front dog gear forward as far as possible.
    Release the circlip N, from the groove and slide it forward along the shaft.
23. Slide, rear dog gear and second gear R, forward. Move the special washer S, forward and remove the split ring T.
24. Slide the first/reverse gear U and selector forward until the selector rod is clear of the rear plate.
    Lift the selector assembly out.
25. Remove the selector assembly for second and third gears.
26. Lift the front of the pinion shaft and remove all the components by sliding them forward.
27. Remove the washer for the rear topshaft bearing from the inside of the casing.
28. If necessary, disassemble the topshaft in the following sequence:
    (a) front bearing, washer and circlip,
    (b) high/low gear assembly complete with selector and bearing pads,
    (c) rear circlip, rear bearing, distance piece and reverse idler gear.
29. If the pinion shaft has to be removed, first remove the differential assembly. Make a mark on one bearing cap and the end plate to make sure of correct assembly. Do not mix the caps and adjuster rings after removal.

Inspection of Parts

Check all parts for wear and damage after cleaning.
See pages 42 and 43 for procedure.

Adjustments

For adjustments before assembly see pages 44 to 48.

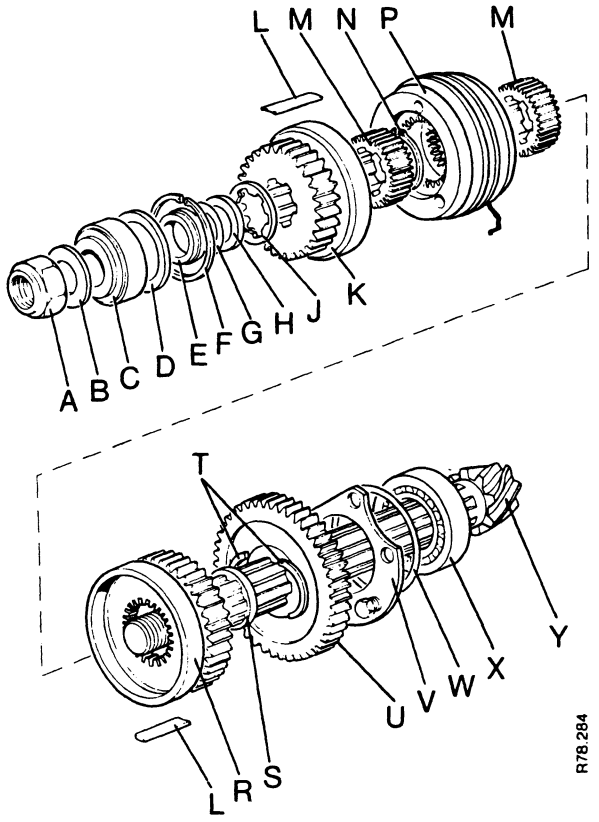

FIGURE 90. BEVEL PINION SHAFT ASSEMBLY

A.	*Nut*	*M.*	*Dog gears*
B.	*Washer*	*N.*	*Circlip*
C.	*Bearing, front*	*P.*	*Synchroniser*
D.	*Distance piece*	*R.*	*Second gear*
E.	*Distance piece*	*S.*	*Special washer*
F.	*Circlip*	*T.*	*Split ring*
G.	*Shims*	*U.*	*First/Reverse gear*
H.	*Distance piece*	*V.*	*Plate*
J.	*Splined washer*	*W.*	*Shims*
K.	*Third gear*	*X.*	*Bearing, rear*
L.	*Bearing pad (6)*	*Y.*	*Shaft*

ASSEMBLY

See Figure 90.

1. Install the casing spacer so that the front face is level with the ends of the bottom studs.
2. Remove the circlip and bearing from the rear end of the topshaft. Install the bearing in the rear end plate complete with the correct amount of shims. See page 46 for adjustment. Install the bolt and washer to hold the bearing in position. Use a new tabwasher on the bolt.
3. Install the pinion shaft and differential. Use a wedge of wood to hold the pinion shaft in position.
4. Slide the first/reverse gear T, onto the pinion shaft Y. Make sure the selector groove is towards the rear end plate.
5. Put the second gear R, on the pinion shaft with the synchroniser cup towards the front. Install the six bearing pads L, with a small amount of grease.
6. Put the rear dog gear M, on the pinion shaft. Make sure the thin part of the teeth is towards the front. Make a note of the position of the mark on the side of the gear.
7. Slide the circlip N, on to the pinion shaft but not into the groove.

8. Install the front dog gear with the thin part of the teeth towards the rear end plate. Align the mark on the side of the gear with the mark on the rear dog gear.
9. Install the synchroniser unit on the dog gears.
10. Install the selector assembly for second and third gears. Do not enter the rod into the rear end plate.
11. Install the selector assembly for first and reverse gears. Enter the rod into the rear end plate. Move the casing spacer towards the rear approximately 50 mm at the same time.
12. Put the split ring T, in the groove on the pinion shaft and slide the special washer S, over the ring.
13. Push the synchroniser unit P, dog gears M, circlip N, and second gear R, towards the rear. Enter the selector rod for second and third gears into the rear end plate. Keep pushing until the circlip between the dog gears enters the groove on the shaft.

    Check that the circlip N, has entered the groove by pulling the second gear R, forward. It will not move if the circlip is in the groove.
14. Install the third gear K, with the synchroniser cup towards the rear. Put grease on the six bearing pads and push into position.
15. Put grease on one side of the splined washer J, and put into position on the pinion shaft. Grease toward the gear.
16. Put the layshaft in position inside the casing spacer.

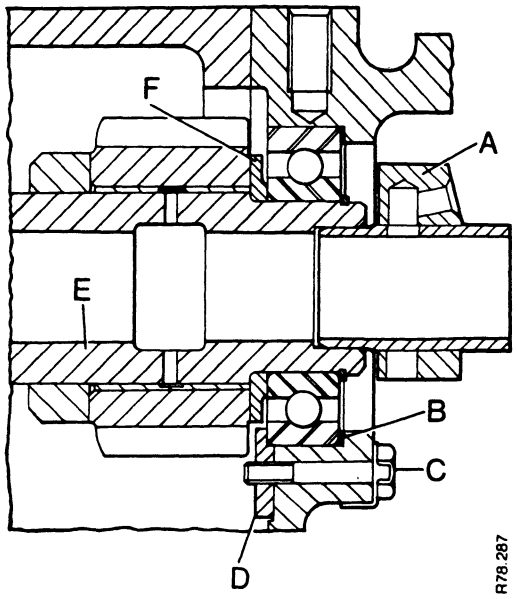

FIGURE 91. TOPSHAFT REAR END

A. Lubrication muff
B. Shims
C. Bolt
D. Special washer
E. Topshaft
F. Thrust washer

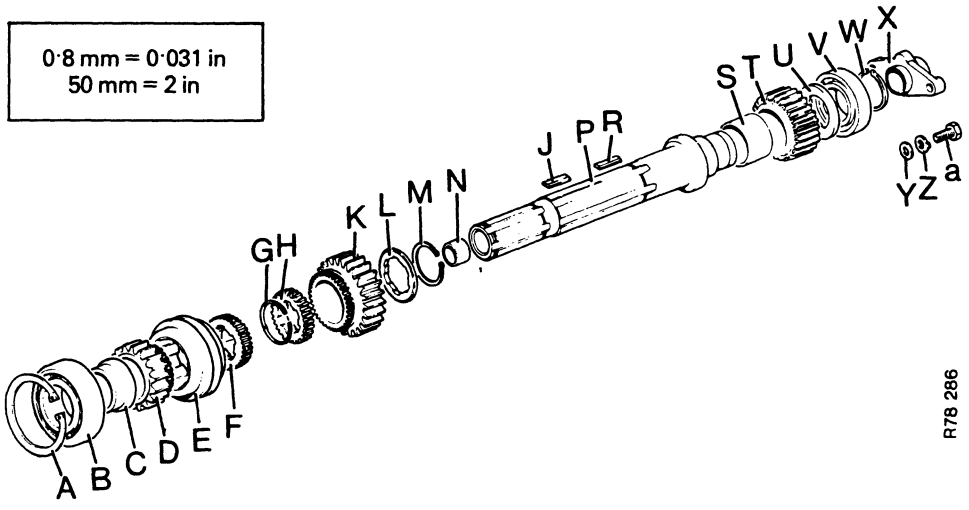

FIGURE 92. TOPSHAFT ASSEMBLY 1410 TRACTOR

A. Circlip
B. Bearing, front
C. Distance piece
D. High range gear
E. Selector gear
F. Dog gear
G. Circlip
H. Dog gear, rear
J. Bearing pad (6)
K. Low gear
L. Splined washer
M. Circlip
N. Bush
P. Topshaft
R. Bearing pad (6)
S. Bush
T. Reverse idler gear
U. Thrust washer
V. Bearing, rear
W. Circlip
X. Lubrication muff
Y. Washer, rear bearing
X. Tabwasher rear bearing
a. Bolt, rear bearing

See Figure 91.

17. Put the topshaft complete and the selector assembly in position inside the casing spacer. Enter the end of the topshaft and selector rod into the rear end plate.
18. Move the spacer toward the rear end plate. Enter the rear bearing of the layshaft into the end plate. Hit the front of the topshaft with a soft face hammer to push it into the rear bearing. Install the circlip on the rear end of the topshaft when in position.

    Install the bolt C and special washer D to hold the rear bearing in place.
19. Install the lubrication muff A at the rear end of the topshaft. Do not tighten the two nuts completely, permit a free movement of 0·8 mm.
20. Remove the outer cup of the front bearing for the topshaft from the end plate.

    Install the cup on to the bearing cone on the shaft.
21. Put all the springs for the detent balls in the front end plate. Put the gear locks in position.

    Install the slow/normal layshaft, large gear toward the front.
22. Put the front end plate on to the bottom studs and move towards the spacer. Do this until the driven gear M, Figure 94 can be put on the topshaft. Install the gear with the dog teeth toward the front and install the six bearing pads.
23. Enter the first/reverse selector rod into the front end plate. Use the tool shown in Figure 93 to install the detent ball as follows:

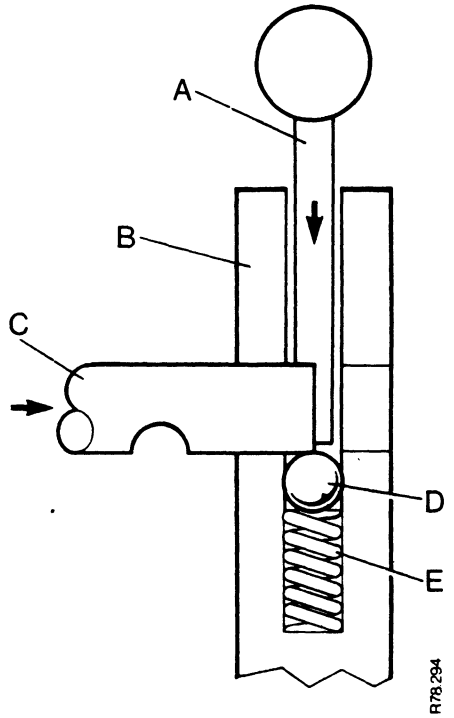

FIGURE 93. INSTALLING DETENT BALL

A. Tool
B. End plate
C. Selector rod
D. Detent ball
E. Detent spring

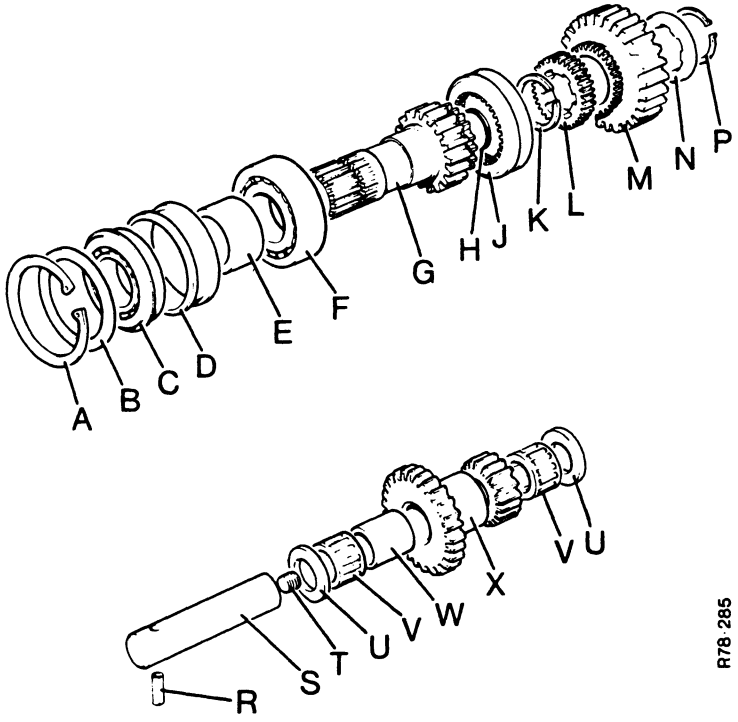

FIGURE 94.
SLOW/NORMAL GEARS 1410 TRACTOR

A. Circlip
B. Washer
C. Bearing, front
D. Distance piece
E. Distance piece
F. Bearing, rear
G. Input shaft
H. Dog gear, front
J. Selector gear
K. Circlip
L. Dog gear, rear
M. Driven gear
N. Splined washer
P. Circlip
R. Pin
S. Spindle
T. Plug
U. Thrust washer
V. Needle bearing
W. Distance piece
X. Layshaft gear

Put the flat of the tool towards the end of the selector rod. Push the tool down and push the rod up to the flat. Remove the tool and push the rod over the ball.

24. Push the front end plate toward the spacer. Push the first/reverse selector rod forward until the gear lock enters the groove, NEUTRAL POSITION.
25. Install the selector gear J, Figure 94 and the dog gear H, for slow/normal on the topshaft. Make sure the thin part of the teeth of the dog gear is toward the front.
26. Enter the selector rod for second and third gears into the front plate. Use the tool to install the detent ball.

    Move the selector rod forward.
27. Put the selector rod for high/low in position. Use the tool to install the detent ball and move the rod forward.
28. Enter the layshaft and topshaft bearings into the front end plate. Use a soft face hammer to hit the front plate until it is against the spacer.
29. Install the two top casing bolts from the front. Install the four Nyloc nuts and tighten to 95 Nm.
30. Engage reverse gear and put a soft metal punch between the casing and the layshaft. Make sure the splined washer is still in position.
31. Install the front bearing, the two distance pieces with the shims between, on the pinion shaft. Make sure the small face of the front distance piece is toward the front.
32. Install the washer and nut on to the pinion shaft.

    NOTE: There must be at least 1½ threads showing through the nut. Check splined washer is in position if less, before tightening the nut. Tighten the nut counter-clockwise to 271 Nm.
33. Install the circlip K, Figure 94 on the front of the topshaft.
34. Put all gears in neutral and then select high or low range.

271 Nm = 28 kg m = 200 lb ft
95 Nm = 10 kg m = 70 lb ft
0·8 mm = 0·031 in

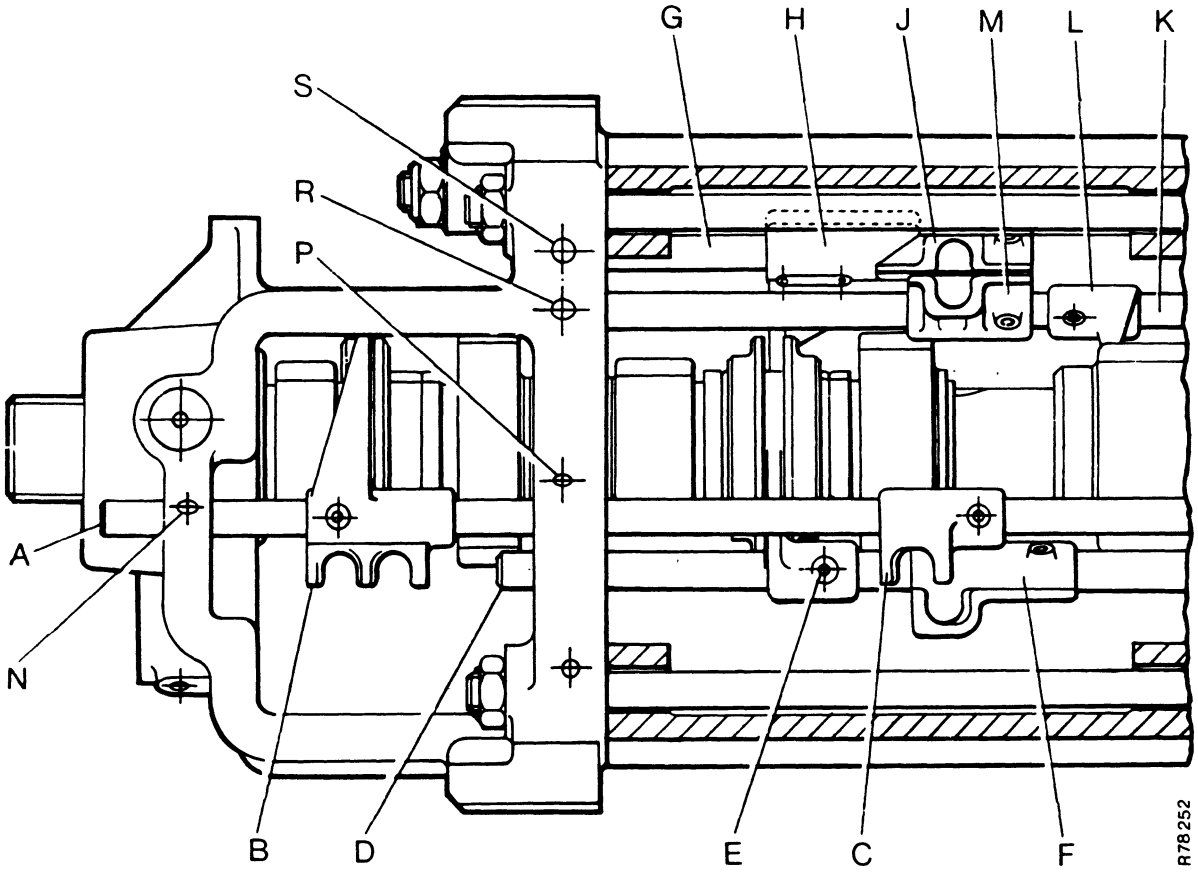

FIGURE 95. ARRANGEMENT OF SELECTORS

A. Slow/Normal rod
B. Slow/Normal fork
C. Slow/Normal jaw
D. High/Low rod
E. High/Low fork
F. High/Low jaw
G. 2nd/3rd rod
H. 2nd/3rd fork
J. 2nd/3rd jaw
K. 1st/Rev. rod
L. 1st/Rev. fork
M. 1st/Rev. jaw
N. Slow/Normal detent ball hole
P. High/Low detent ball hole
R. First/Reverse detent ball hole
S. Second/Third detent ball hole

35. Put the slow/normal selector fork into the sliding gear. Enter the selector rod in the front plate and use the tool to install the detent ball. Push the rod toward the rear through the fork and selector jaw.
36. Align the holes in the rod, fork and jaw; install the pins which fasten the fork and jaw.
37. Align the gap in the teeth of the input shaft gear with the teeth of the layshaft. Push the input shaft assembly into the front plate and install the washer and circlip.
38. Install the balls and plunger for the starter safety switch.

GEAR LEVERS

Removing

1. Clean the gearbox cover and the ball housings.
2. Remove the setscrews which fasten the ball housings to the gearbox cover.
3. Remove the ball housings with the gear levers.
4. Put a cover over the holes in the gearbox cover to prevent dirt falling into the gearbox.
5. Remove the gear lever knobs by turning the knobs counterclockwise.
6. Bend the tabwashers away from the support plate setscrews.
   Remove the support plate setscrews and the support plate.
7. Hold the ball end of the gear lever.
   Carefully pull the gear lever through the dirt excluder.

Installing

1. Put grease in the ball housing.
2. Hold the ball end of the gear lever. Push the lever in position through the dirt excluder.
3. Install the support plate, setscrews and new tabwashers.
4. Tighten the support plate setscrews to 5·4 Nm.
   Bend the tabwashers to keep the setscrews in position.
5. Install the gear lever knob.
6. Use a new gasket. Install the ball housing on the gearbox cover.
   Check that the lever is engaged in the selector jaws.
7. Install the setscrews. Tighten to 9·5 Nm.

Dirt Excluders

1. Check the dirt excluders for wear and damage.
   Replace if not correct.
2. Make sure that when the clip is in position the dirt excluder is tight against the ball housing.

NOTE: A hose clip can be used to hold the dirt excluder in position.

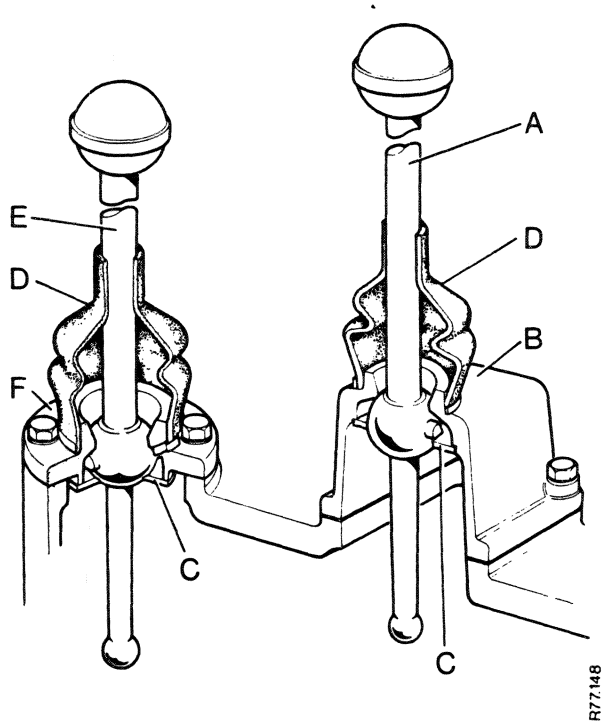

FIGURE 96. GEAR SELECTOR LEVERS

A. Range lever *D. Dirt excluder*
B. Housing *E. Gear lever*
C. Support plate *F. Housing*

5·4 Nm = 0·6 kg m = 4 lb ft
9·5 Nm = 1 kg m = 7 lb ft

DIFFERENTIAL UNIT

DIFFERENTIAL: 1210 TRACTOR

Disassembly

1. Bend the tabwashers and remove the nine set-screws which fasten the cage to the end plate.
2. Put a mark on the cage and the end plate so that you can assemble the parts in the correct position. This job is important.
3. Use a soft faced hammer to remove the end plate C.
4. Use external circlip pliers to remove a circlip from the bevel pinion pin E.
5. Use a mild steel punch and a hammer to remove the pin.
6. Remove the bevel wheels G and bevel pinions F.

NOTE: It is not necessary to remove the spiral gear from the cage unless it is to be replaced.

If a new spiral gear is being installed, do steps 7 and 8.

7. Bend the tabwashers and remove the nuts and bolts which fasten the spiral gear A to the cage B.
8. Use a soft faced hammer to remove the spiral gear.
9. Check the two ball bearings D for wear and damage.
10. If there is wear or damage, use Service Tool K960605 Figure 98 to remove the bearings.

NOTE: If the Service Tool K960605 is not available, do the following:—

(a) Make a thrust pad to fit the bearings.

(b) Use a puller which has two or three legs.

If the outer part of the bearing is pulled off the inner part, do the following:—

(a) Put the outer part over the inner part with the thick edge next to the differential.

(b) Insert three balls in between the inner and outer parts.

(c) Install the puller with the feet of the legs under the outer part.

(d) Tighten the puller to remove the inner part.

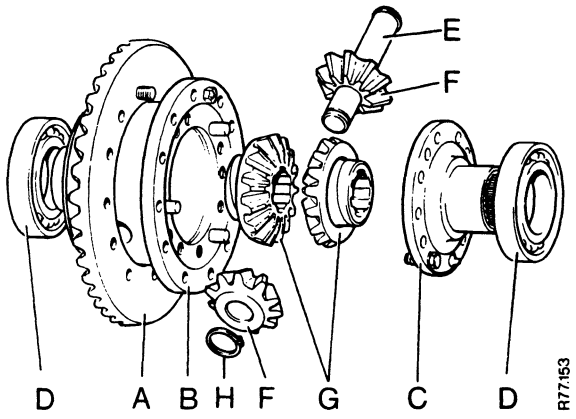

FIGURE 97. 1210 DIFFERENTIAL

A. Spiral gear
B. Cage
C. End Plate
D. Ball thrust bearing
E. Pin
F. Bevel pinions
G. Bevel wheels
H. Circlip

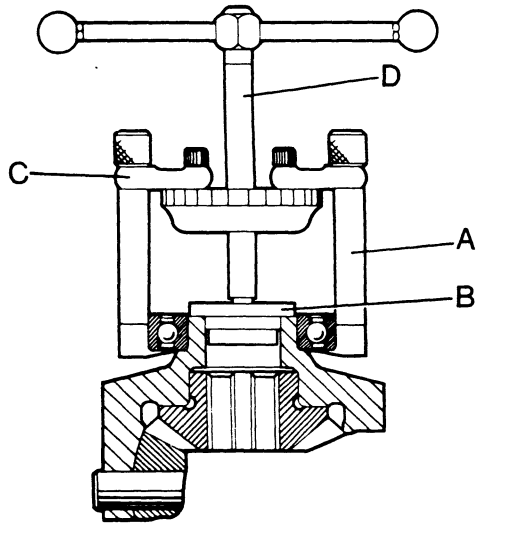

FIGURE 98. REMOVING BEARINGS

A. Puller Claw legs
B. Adaptor thrust pad
C. Adjuster arms
D. Puller, Churchill No. 55

Assembly

1. Before you install new bearings, look for the word THRUST on the outer track of each bearing.
2. Install the bearings with the word THRUST toward the adjuster wheels.
   Use a press to push the bearings into position.
3. Before you install a new spiral gear, make sure that the faces of the cage and the spiral gear are clean.
   NOTE: Spiral gears and bevel pinions are made as a set.
   Do not replace one part unless the other part is also replaced.
4. Put the Spiral gear in position on the cage and install the bolts.
   Replace the tabwashers and install the nuts.
   Tighten the nuts evenly to 68 Nm.
   Bend the tabwashers to keep the nuts in position.
5. Put a small amount of molysulfide paste on the faces of the bevel wheels and bevel pinions.
6. Install a bevel wheel in the cage.
   Install the bevel pinions in the cage.
7. Align the holes in the bevel pinions with the holes in the cage and install the pin.
8. Use external circlip pliers to install the circlip on the bevel pinion pin.
9. Install the other bevel wheel.
10. Align the marks on the end plate and the cage and use a soft faced hammer to hit the end plate in position.
11. Use new tabwashers and install the setscrews. Make sure that the tabwashers are over the dowels.
12. Tighten the setscrews to 40 Nm.
13. Bend the tabwashers to keep the setscrews in position.

40 Nm = 4·2 kgm = 30 lb ft
68 Nm = 7 kgm = 50 lb ft

DIFFERENTIAL: 1410 TRACTOR

Disassembly

1. Make a mark on both halves of the differential cage to make sure of correct assembly.
2. Release the lock washers E and remove the twelve bolts which fasten the unit together.
3. Use a soft face hammer to remove the end plate N and spiral gear M.
4. Separate the halves of the cage and remove the bevel wheels H, bevel pinions K, and spider J.
5. Remove the circlip T which holds the differential lock ring S, remove the differential lock ring.
6. Remove bearings from end plate and cage if necessary. Use Service tool K960605.
   DO NOT use a puller which pulls on the bearing outer cup.

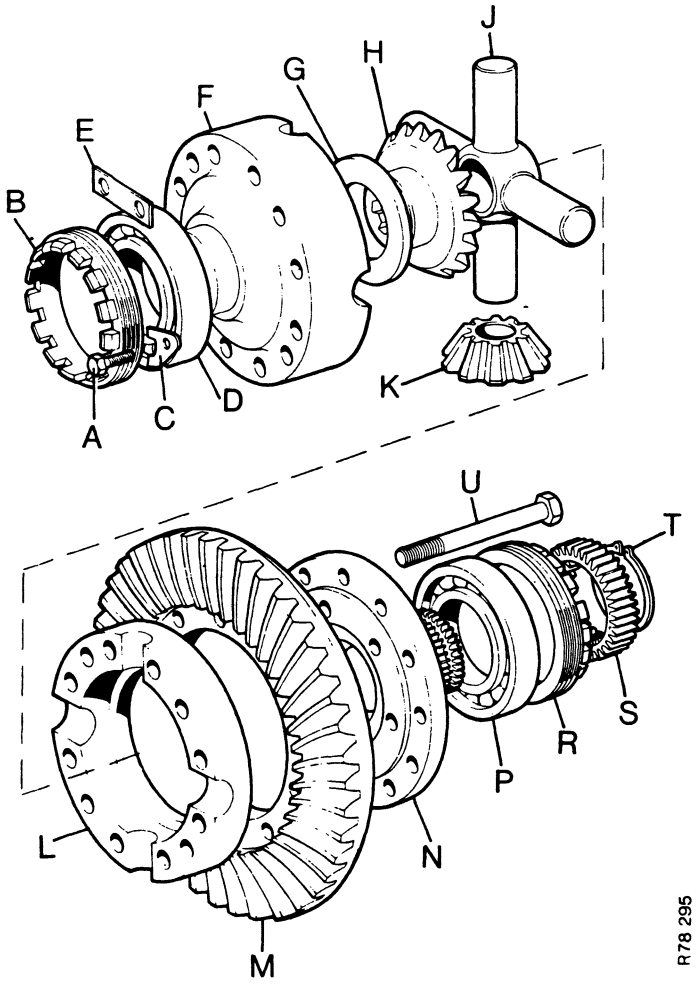

FIGURE 99. DIFFERENTIAL UNIT 1410 TRACTOR

A. Bolt
B. Adjuster
C. Locking tap
D. Bearing
E. Locking tab
F. Cage
G. Thrust washer
H. Bevel wheel (2)
J. Spider
K. Bevel pinion (4)
L. Cage
M. Spiral gear
N. End Plate
P. Bearing
R. Adjuster
S. Differential lock
T. Circlip
U. Bolt

Assembly

1. Press the bearings onto the end plate and cage. Make sure the word THRUST, which is on the outer cup of the bearings is outwards.

   The bearings are of the angular contact type.
2. Put the differential lock ring on the end plate and install the circlip.
3. Assemble the end plate, spiral gear, and inner half of the cage onto two bolts.
4. Put molysulfide paste on the bearing faces of the bevel wheels, bevel pinions and spider arms. Put the pinions on the spider.
5. Put the thrust washers on to the bevel wheels. Install the bevel wheels, pinions and spider into the cage.
6. Put the outer half of the cage into position. Install the remainder of the bolts and lock washers.
7. Make sure all parts are correctly assembled then tighten the bolts to a torque of 100 Nm. Bend the lock washers into position to prevent the bolts moving.

NOTE: If a new spiral gear is installed a new pinion shaft must be installed also.

100 Nm = 14 kg m = 74 lb ft

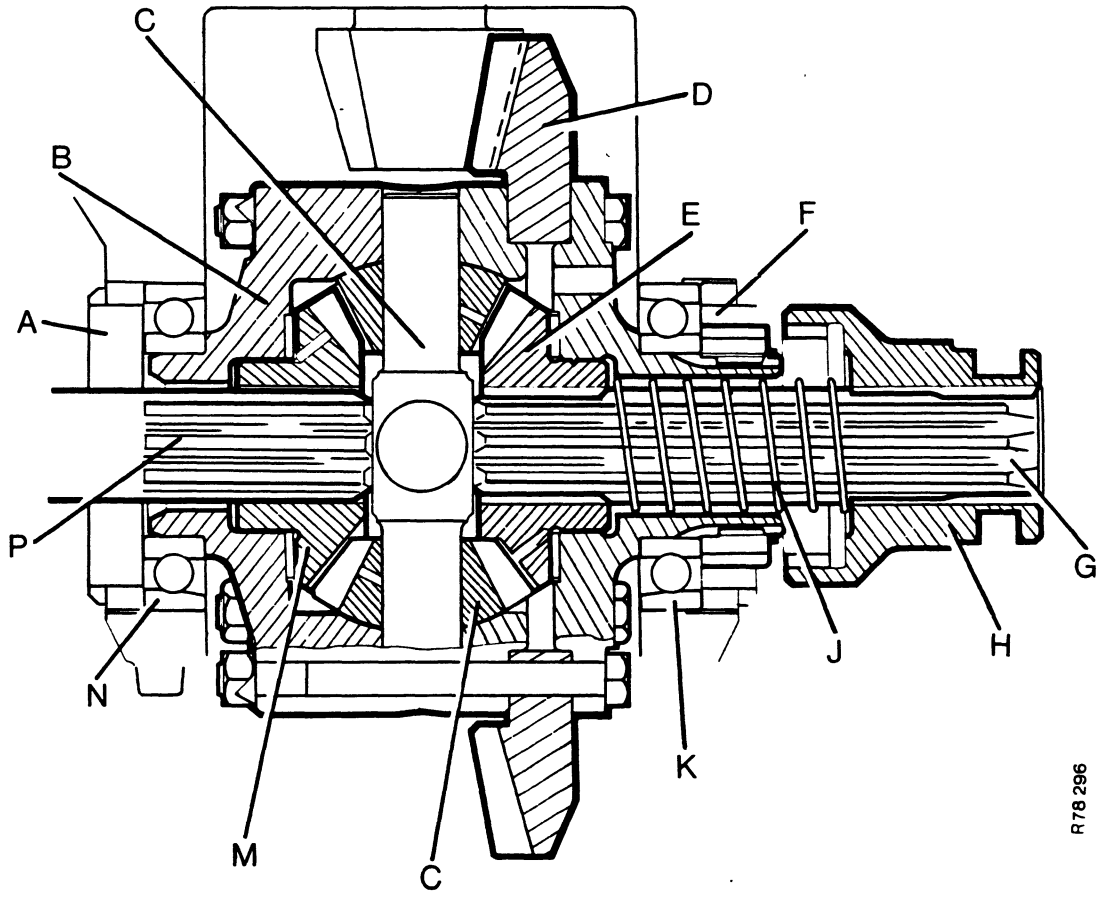

FIGURE 100. DIFFERENTIAL ASSEMBLED

A. Adjuster wheel
B. Cage
C. Spider
D. Spiral gear
E. Bevel wheel
F. Adjuster wheel
G. Spur pinion shaft
H. Differential lock sleeve
J. Return spring
K. Bearing
L. Bevel pinion
M. Bevel wheel
N. Bearing
P. Spur pinion shaft

ADJUSTMENTS

ADJUSTING BEARINGS

1. Remove the screws and locking plates from the adjuster wheels B.
2. Turn the right-hand adjuster wheel counter-clockwise and the left-hand adjuster wheel clockwise. Hit the bearing caps with a soft face hammer while doing this operation.
3. Turn the adjuster wheels until there is maximum clearance between the spiral gear and bevel pinion teeth.
4. Put a 30 cm screwdriver C in the slot of the differential cage, parallel with the floor. See Figure 101.

   NOTE: On the 14 series tractor put the blade of the screwdriver between two cage bolts.
5. Adjust the wheels so that the weight of the screwdriver will just turn the cage.

   Remove the screwdriver and turn the cage 180 degrees.

   Put the screwdriver in the other slot and check the adjustment again.
6. When the adjustment is correct, make a mark on each adjuster wheel. Make marks on the end plate which aligns with the marks on the adjuster wheels.

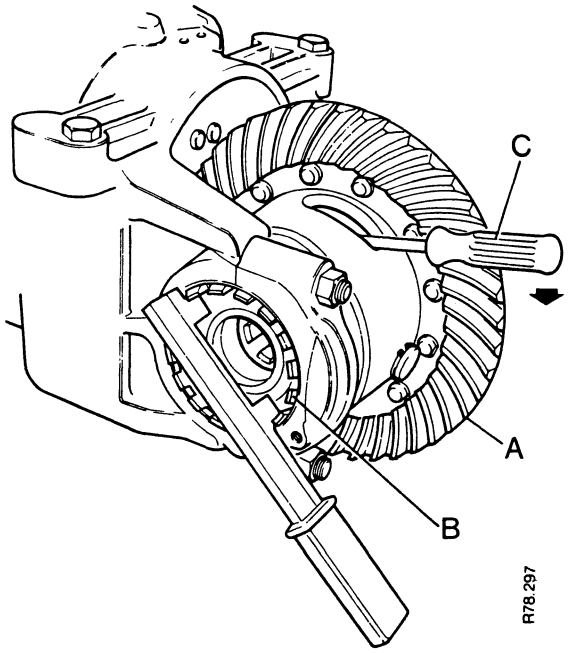

FIGURE 101. ADJUSTING DIFFERENTIAL BEARINGS

A. Spiral gear
B. Bearing adjuster
C. Screwdriver 30 cm long

30 cm = 12 in

TOOTH CLEARANCE

1. Turn the left-hand adjuster wheel counter-clockwise then the right-hand adjuster wheel clockwise. Turn the wheels the same amount using the marks as a guide.
2. Do this operation until the clearance between the spiral gear and bevel pinion teeth is 0·18 to 0·23 mm.
3. To measure the clearance fasten a dial gauge to the rear end plate. Put the probe of the gauge against a tooth of the spiral gear.
4. Hold the pinion to stop it turning and move the spiral gear backwards and forwards.

   Make a note of the reading on the gauge. Repeat the check on three different teeth at 120 degree intervals around the spiral gear. Use the tooth which shows the smallest reading for the final adjustment. Mark the tooth so that all future adjustments can be done on it.
5. When the clearance is correct:
   Tighten the differential bearing caps to 163 Nm.
   Check the adjustment again.
   Bend locking tabs over bearing cap bolts.
   Install locking plates and screws for adjuster wheels.
   Bend locking tabs over screws.

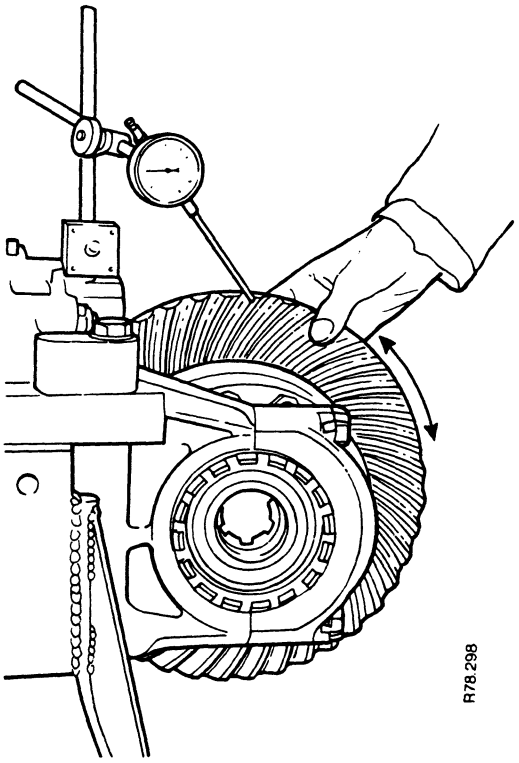

FIGURE 102. CHECKING TOOTH CLEARANCE

163 Nm = 17 kg m = 120 lb
0·18 mm = 0·007 in
0·23 mm = 0·009 in
30 cm = 12 in

FINAL DRIVES

MAINTENANCE

1. Every 60 hours put grease in the hub seal housing through the grease fittings D. Operate the grease gun two times only when doing this job.
2. Every 125 hours check the level of the oil in the unit. Remember to clean around the level and filler plugs before removing. Make sure the breather bolts are clear on 12 series tractors.

   NOTE: On 1410 4-wheel drive tractors the plug for the brake adjuster is used for both filling and level. The normal level plug is not used. See Figure 106.

   On 1210 4-wheel drive tractors the plug on top of the casing is used for filling. See Figure 104.
3. Every 1000 hours change the oil in the unit. This is best done after the tractor has been used and the oil is warm.

   NOTE: Clean around plugs before removing. Use clean oil containers see page 108 for correct grade of oil and capacity.

Breathers

Check that the breathers are free from restrictions every 125 hours when you check the oil levels.

On 1210 2WD tractors the top bolt of the cover has a hole through the centre. This bolt must only be replaced with a normal bolt if the tractor is changed to High Clearance. 1210 High Clearance tractors have a pipe installed for the breather. 1210 4WD tractors have a hole through the filler plug, A Figure 104.

On 1410 tractors the breather plugs are installed in the axle end flanges. The plugs cannot be checked from outside. Any pressure in the final drive releases into the axle case.

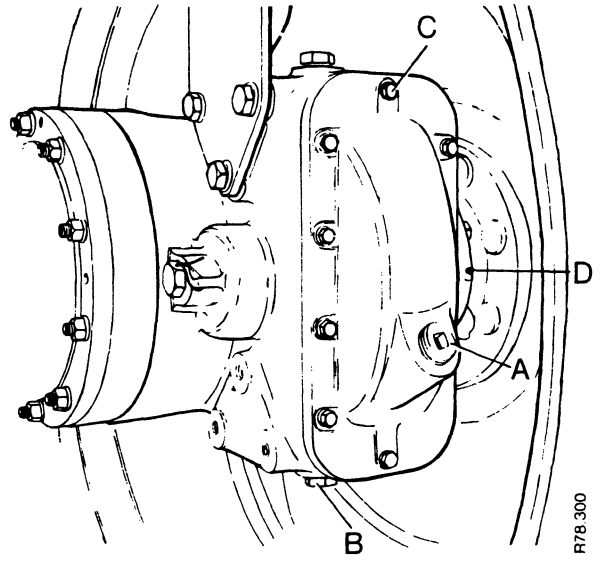

FIGURE 103. 1210 2WD TRACTOR

A. Filler/Level plug
B. Drain plug
C. Breather bolt
D. Grease fitting

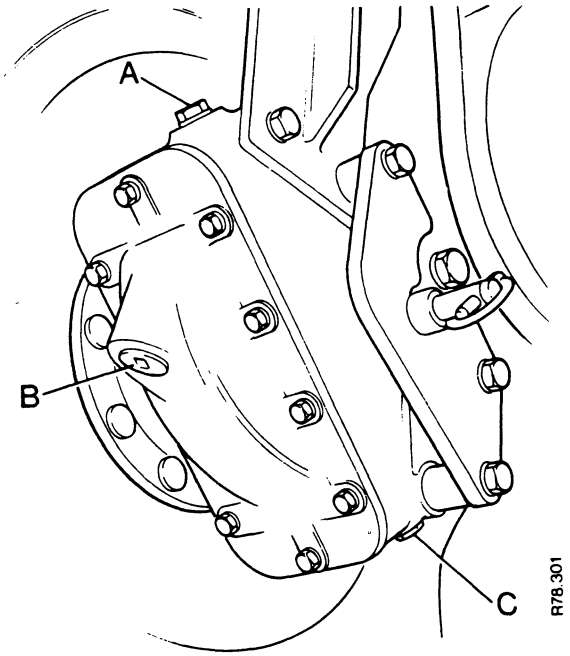

FIGURE 104. 1210 4WD TRACTOR

A. Filler/Breather plug
B. Level plug
C. Drain plug

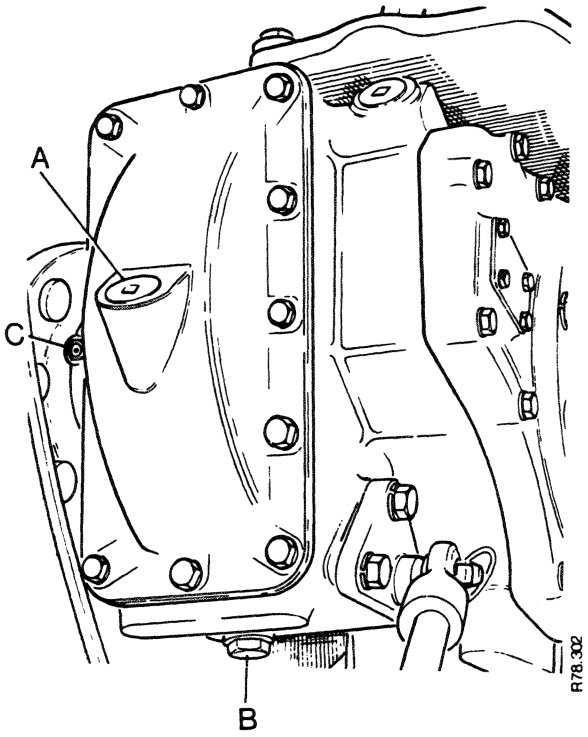

FIGURE 105. FINAL DRIVE UNIT
1410 2WD TRACTOR

A. Filler/Level plug *C. Hub grease fitting*
B. Drain plug

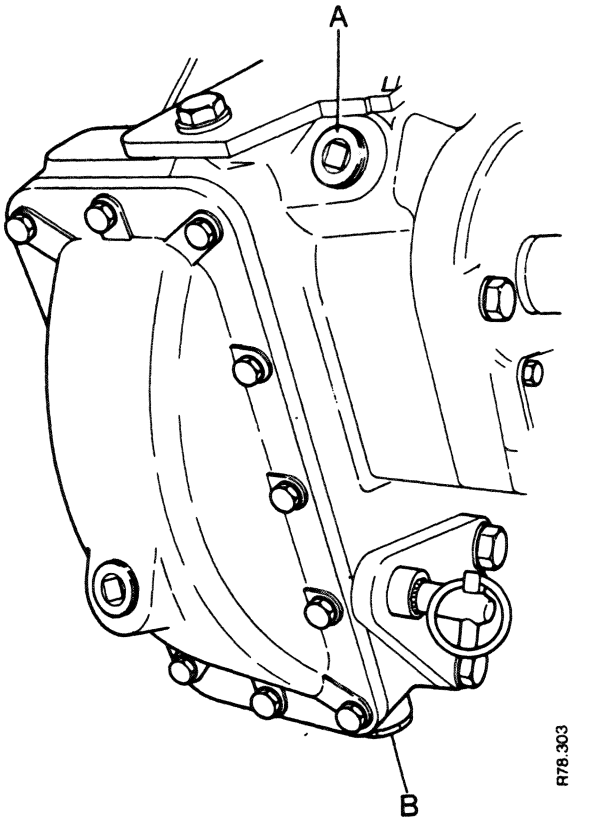

FIGURE 106. FINAL DRIVE UNIT
1410 4WD TRACTOR

A. Filler/Level plug (Brake adjuster plug) *B. Drain plug*

FINAL DRIVE: 1210 TRACTOR

Disassembly

1. Remove the oil from the reduction case.
2. Remove the cover.
3. Bend the tabwasher away from the ring nut which fastens the spur wheel to the final driveshaft.
4. Use a 'C' spanner (Service Tool K909842) and a hammer to loosen the ring nut. Turn the nut until it is against the inner bearing.
5. NOTE: The following step only applies to earlier tractors, later models do not have the threaded holes.
   Use a ½" BSF thread tap to clean the two threaded holes in the flange of the final driveshaft. Install the two bolts (Service Tool K900207) in the holes. Put the two thrust blocks in position between the ends of the bolts and the casing.
   Tighten each bolt the same amount until the shaft is clear of the casing. Make sure the ring nut is clear of the threads of the shaft during this procedure.
6. For later tractors make the special plate as shown in Figure 11. Install the tool as shown in Figure 108. Tighten each bolt the same amount until the shaft is clear of the casing.
7. Remove the ring nut, tabwasher and inner bearing from the casing.
8. Remove the bolts which fasten the oil seal housing to the casing.
9. Remove the oil seal housing, collar and dirt shield.
10. Remove the spur wheel, oil seal sleeve, oil seal and outer bearing.

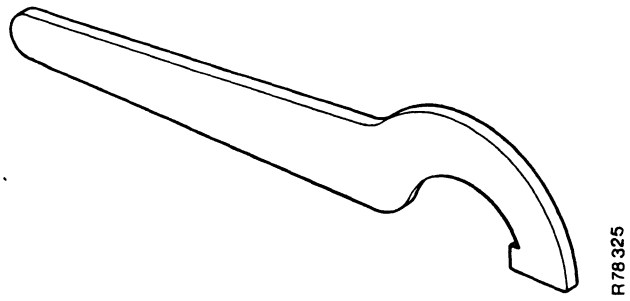

FIGURE 107. "C" SPANNER K909842 FOR RING NUT

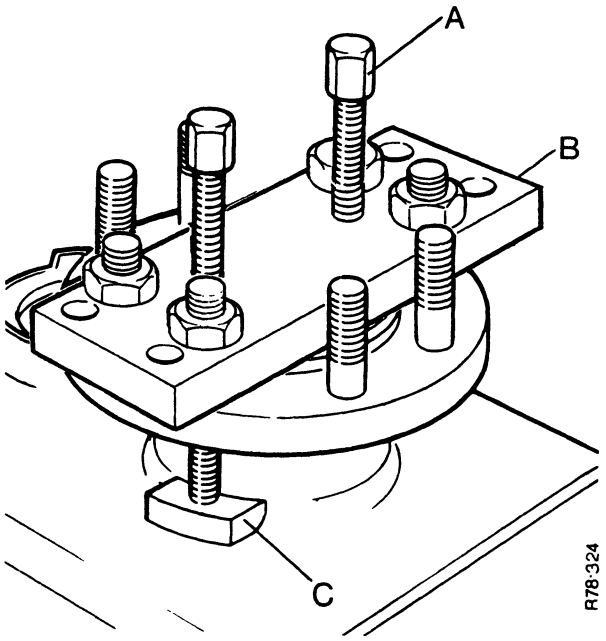

FIGURE 108. REMOVAL OF FINAL DRIVE SHAFT

A. Tool No. K900207
B. Special plate
C. Thrust block

11. Use Service Tool K960618 to remove the brake drum as follows: See Figure 109.
    (a) Put the two ½ in UNC × 5 in bolts H through the holes in the flange on the tool.
    (b) Put the two distance tubes G on the bolts.
    (c) Slide the collar F and tool A over the spur pinion shaft.
    (d) Fasten the flange of the tool to the drum with the bolts.
    (e) Use a bar through the lug of the tool to prevent it from turning.
    (f) Tighten the centre bolt of the tool to remove the drum.

    NOTE: If the drum is difficult to move hit the end of the centre bolt with a 7 lb hammer.
12. Remove the circlip from the cover over the end of the spur pinion shaft.
13. Hit the splined end of the shaft with a soft face hammer until the cover, shims and bearing are pushed out. Remove the shaft from the casing.
14. Remove the bearings from the shaft.
15. Use a long punch through the casing to remove the oil seal. Remove the circlip and distance piece.
16. Use a punch to remove the bearing cups from the casing. Hit both cups toward the inside of the casing.
17. Remove the collar from spur pinion shaft. Remove the 'O' ring from the collar.
18. Remove the adjusting screw and shims, for the final drive shaft.
19. Use a soft metal punch through the screw hole to remove the bearing thrust plate and bearing cup.

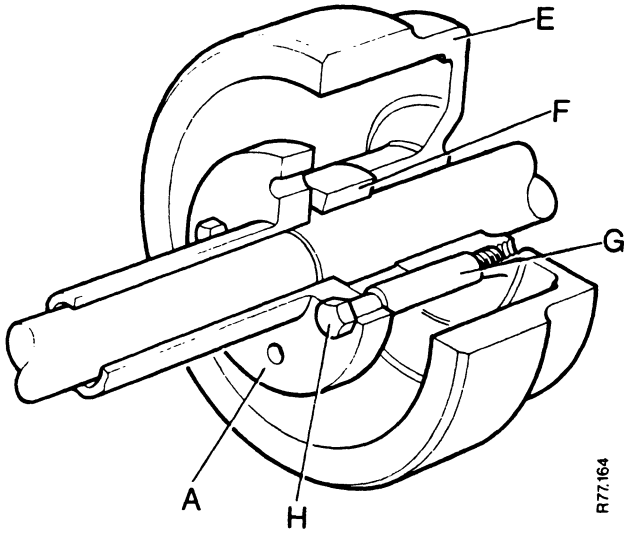

FIGURE 109. BRAKE DRUM REMOVAL

A. Service tool
E. Brake drum 3½ in
F. Collar
G. Distance tube
H. Bolts ½ UNC × 5 in

Inspection of Parts

1. Check all the bearing cups and cones for wear or damage.
2. Check the gear teeth for wear or damage.
3. Check the outside face of the collar for wear.
4. Replace any parts that show wear or damage.
5. Replace all the oil seals and 'O' rings. Destroy the old seals and 'O' rings.
6. Check the brake drums for wear. See the Data Section for the maximum wear before replacement is necessary.

Installing the Spur Pinion Shaft

1. Install the circlip C into the casing. Figure 110.
2. Install the oil seal B, with the lip toward the circlip, from the brake drum side of the casing.
3. Install the distance piece E next to the circlip.
4. Press the cup of the inner bearing into the casing with the thick edge toward the distance piece.
5. Press the bearing cones on to the shaft. Make sure the thick edges are against the spur gear.
6. Install a new 'O' ring into the collar D.
7. Remove any sharp edges from the splines of the spur pinion shaft.
8. Put a small amount of Hydraulic Seal Loctite on the inside of the collar D.

   Install the collar on the shaft, small face toward the inner bearing.
9. Fit the keys into the grooves of the shaft, for the brake drum.
10. Install the spur pinion shaft into the casing. Press the cup of the outer bearing into the casing.
11. Use the following procedure to find the correct amount of shims to install for bearing preload.
    (a) Install the end cover and circlip without shims.
    (b) Push the end cover toward the bearing while turning the shaft.
    (c) Use the feeler gauge to measure the gap between the circlip and the end cover. Do this in three different positions around the cover, see Figure 113, to find smallest gap. Make a note of the smallest measurement. Remove the circlip and end cover.
    (d) Select shims of the same size as the smallest measurement, plus 0·076 mm, which is the bearing preload.

Example:	Measurement	0·304 mm
	Plus preload	+0·076 mm
	Shims needed	0·38 mm

12. Make sure the circlip groove has no sharp edges to cause damage to the 'O' ring.

    Install the correct amount of shims, a new 'O' ring and the end cover.

    Turn the shaft to align the bearings and hit the end cover with a soft face hammer.

    Install the circlip while turning the shaft.
13. Hit the circlip with a hammer and large parallel punch to make sure it is fully in the groove.
14. Press the brake drum on to the shaft until against the collar D.

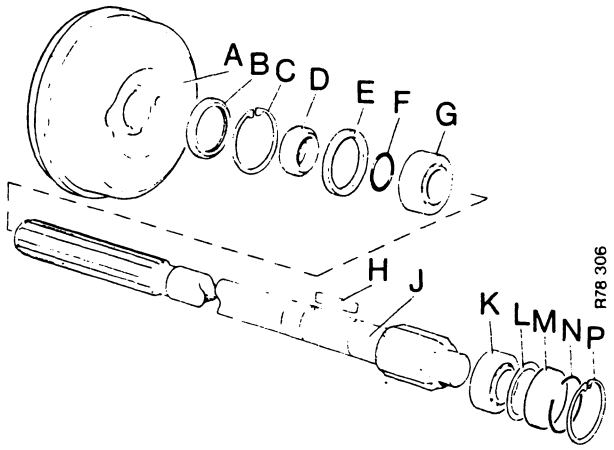

FIGURE 110. SPUR PINION SHAFT

A. Brake drum
B. Oil seal
C. Circlip
D. Collar
E. Distance piece
F. 'O' ring
G. Bearing
H. Key
J. Shaft
K. Bearing
L. Shims
M. End cover
N. 'O' ring
P. Circlip

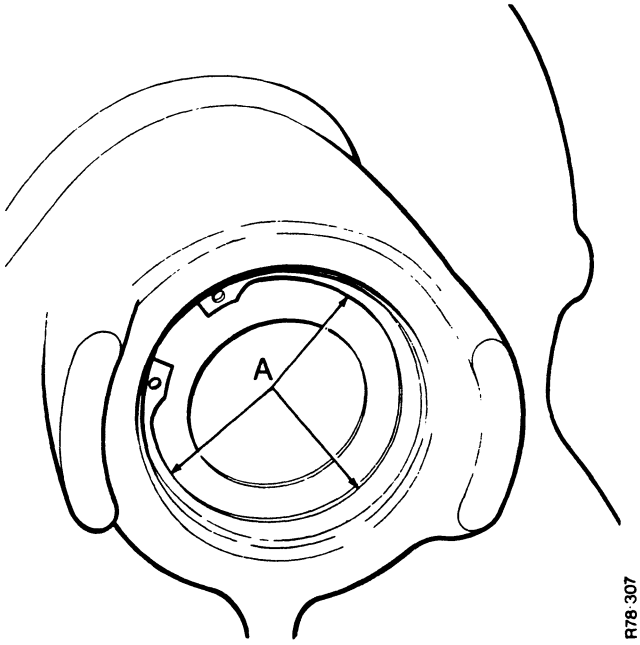

FIGURE 111. BEARING ADJUSTMENT

A. Positions to check gap

0·304 mm = 0·012 in
0·076 mm = 0·003 in
0·38 mm = 0·015 in
50 mm = 2 in

Installing the Final Drive Shaft

1. Install the thrust plate A for the adjuster screw in the casing. Figure 112.
2. Press the inner bearing cup B, thick edge toward the thrust plate, into the casing.
3. Use a steel plate 13 mm thick and 110 mm diameter to press the inner oil seal G (single lip type) into the bore of the casing. Make sure the lip is toward the inside of the casing. Press the seal in until it is 25 mm from the outer face of the casing.
4. Use a steel plate 13 mm thick and 107 mm diameter to press the outer oil seal (double lip type) fully into the oil seal housing. Make sure the lips are toward the drive shaft flange.

   Put heavy grade grease between the lips of the seal.
5. Put the dirt shield P in position on the collar S. Put a new 'O' ring R on to the drive shaft and slide it against the flange. Push the collar and dirt shield on to the shaft until against the flange.
6. Install the oil seal housing on to the shaft.
7. Press the outer bearing cup into the oil seal housing, thick edge toward the oil seal.
8. Install the bearing cone on to the shaft and push it against the collar S and cup.
9. Install the oil seal sleeve F on to the shaft with the chamfer inward away from the bearing.
10. Clean the splines of the drive shaft with Loctite cleaning fluid and apply Loctite (stud-lock grade) to the splines.
11. Put the spur wheel in the casing and hold it in position while installing the drive shaft. Install the drive shaft into the casing and through the spur wheel.

    Install the tabwasher D, ring nut C, and bearing cone B on the end of the shaft. Tighten the ring nut with your fingers.
12. Turn the oil seal housing until the grease fitting will be toward the rear of the tractor.

    Install the bolts which fasten the seal housing to the casing. Tighten the bolts to 68 Nm.

25 mm = 1 in
68 Nm = 7 kgm = 50 lb ft
13 mm = 0·5 in
110 mm = 4·31 in
107 mm = 4·21 in

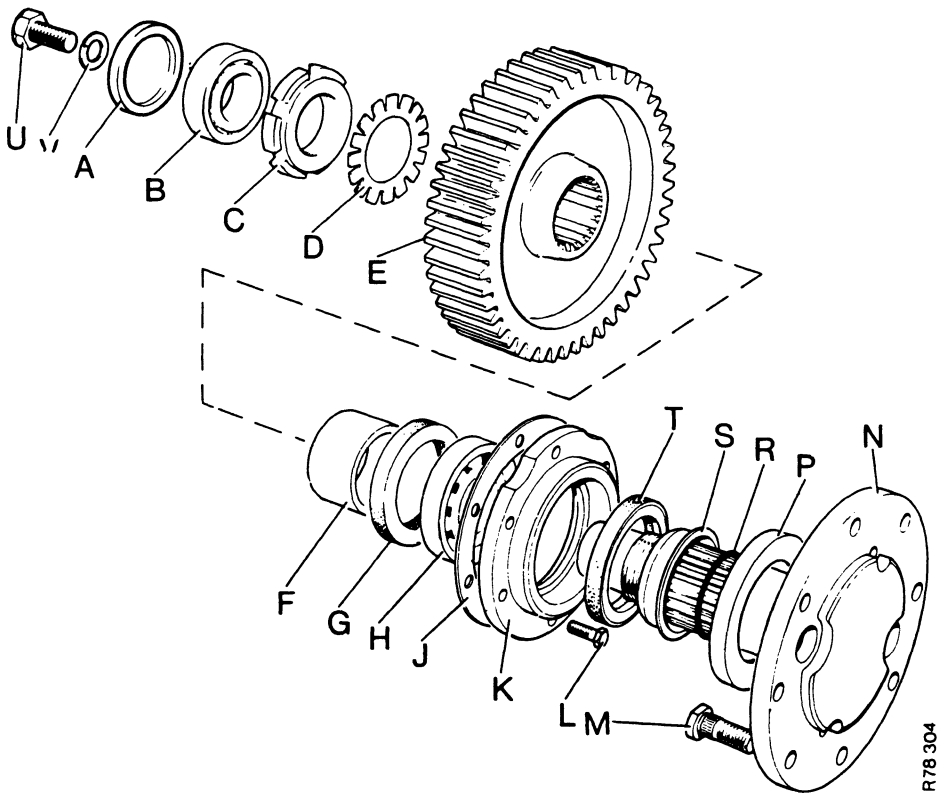

FIGURE 112.
FINAL DRIVE SHAFT ASSEMBLY 1210

A. Thrust plate
B. Bearing
C. Ring nut
D. Tabwasher
E. Spur wheel
F. Sleeve
G. Oil seal
H. Bearing
J. Gasket
K. Housing, oil seal
L. Bolt, oil seal housing
M. Bolt, flange
N. Drive shaft
P. Dirt shield
R. 'O' ring
S. Collar
T. Oil seal
U. Adjuster screw
V. Shims

13. Use a 'C' spanner (Service Tool K909842) and a hammer to tighten the ring nut.
    NOTE: The nut must be tight or damage and rapid wear can be caused to the unit. Bend tab-washer lugs into nut.
14. Hit the flange of the drive shaft while turning it to align the bearings.
    Install the adjusting screw without the shims. Turn the screw in until the end is against the thrust plate. Now turn the screw until all the free movement of the shaft is removed.
15. Use a feeler gauge to measure the gap between the head of the adjusting screw and the casing. Make a note of the measurement.
16. Remove the screw and install shims on to it. Select an amount 0·15 mm less than the measurement. Install the screw and tighten, lock with wire.
17. Put grease in through hub grease fitting until grease shows at top of inner seal.
18. Clean rear face of case and fit a new gasket. Install end cover and make sure breather bolt is fitted at top centre position. Make sure the hole in the bolt is not restricted.
19. Install the unit on to the tractor.
20. Adjust the brakes and fill the case with the correct grade of oil to the correct level.

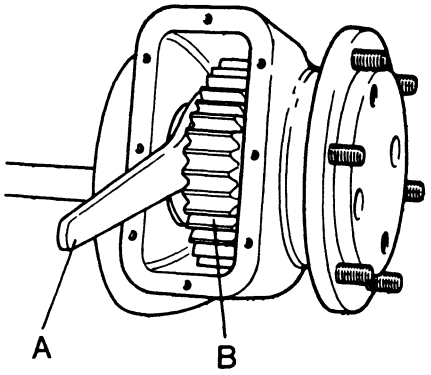

R78·305

FIGURE 113. TIGHTENING RING NUT
A. "C" Spanner (Service Tool K909842)
B. Spur wheel

0·15 mm = 0·006 in

FINAL DRIVE: 1410 TRACTOR

Disassembly

1. Put the unit on the floor with the spur pinion shaft vertical and the drive flange on the floor. Put a block under the unit to hold it in this position.
2. On tractors which have mechanical brakes, remove the small cover plate from the brake housing.

   Remove the shouldered clevis pin. Use a ¼ UNC Bolt in the threaded hole to remove if necessary.
3. On tractors with hydraulic brakes, remove the nut and pin from the operating lever. Remove the lever spacer and dirt seal from the shaft.
4. Remove the bolts which fasten the brake housing to the reduction casing. Lift the housing clear of the spur pinion shaft.

NOTE: The connecting link on mechanical brakes is removed with the housing but the pivot lever is not. The brake adjuster will have to be released if the lever does not clear the housing.

5. Remove the circlips from the brake link pins. Remove the pins and lift off the brake discs.
6. Remove the brake actuator assembly and the remainder of the brake disc plates.

   Put all the parts on the bench in the sequence of removal.
7. Use a sling and hoist to lift the unit on to a bench or stand.

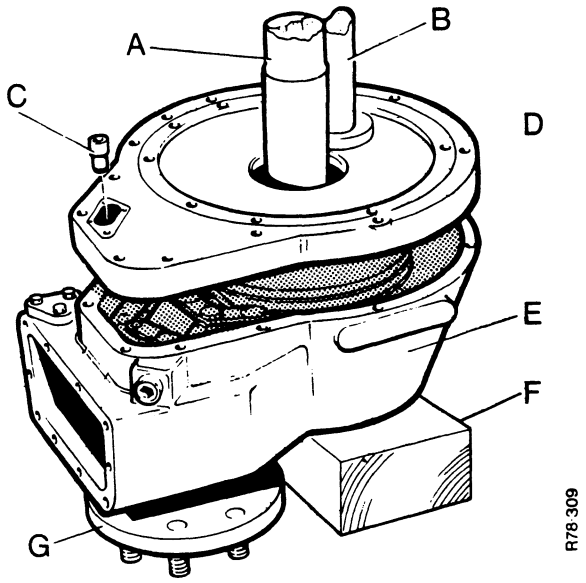

FIGURE 114. DISASSEMBLING BRAKES

A. Spur pinion shaft
B. Brake camshaft
C. Stepped clevis pin
D. Brake housing
E. Reduction case
F. Block
G. Drive shaft flange

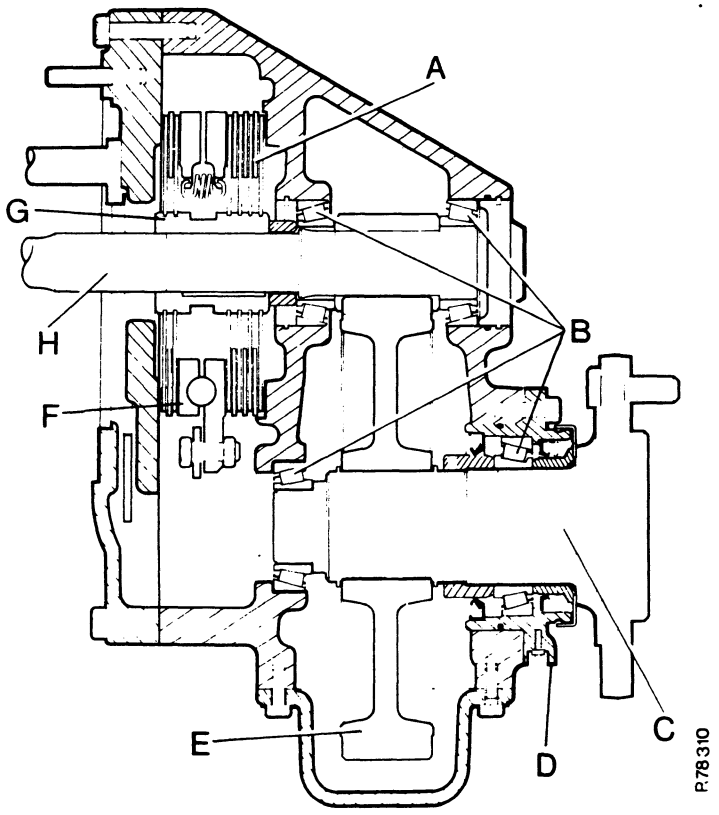

FIGURE 115. FINAL DRIVE

A. Disc brake assembly
B. Taper roller bearings
C. Final drive shaft
D. Oil seal housing
E. Spur wheel
F. Brake actuator
G. Disc hub
H. Spur pinion shaft

Final Drive Shaft Removal

1. The final drive shaft can be removed with the final drive installed on the tractor if necessary.
2. Remove the spur wheel cover.
3. Remove the circlip between the inner bearing and the spur wheel from the groove.
4. Put a socket spanner through the holes in the flange of the drive shaft. Remove the bolts which fasten the oil seal housing to the reduction casing.
5. Use a lever to pull the drive shaft out of the casing. Use a lever to remove the inner bearing from the end of the shaft at the same time.

   DO NOT try to pull the shaft out with the bearing in position. The rollers will be pushed out of the cage.
6. Remove the spur wheel, circlip or special washer and inner bearing from the casing.
7. Remove the locking screw from the ring nut on the final drive shaft. Use the special spanner DB 8009 to remove the ring nut.
8. Use a ½ inch BSF thread tap to clean the two threaded holes in the drive shaft flange.

   NOTE: Not later tractors.
9. Install the two extractor bolts K900207 in the holes. Put a thrust block of metal between the end of each bolt and the casing. Tighten the bolts evenly to push the seal housing and bearing off the shaft.
10. On later tractors without threaded holes in the flange a plate must be made as shown in Figure 10.

    Install the tool as shown in Figure 117. Turn each bolt the same amount until the housing is off the shaft.

    Use a lever to remove the oil seals and remove the bearing from the seal housing.

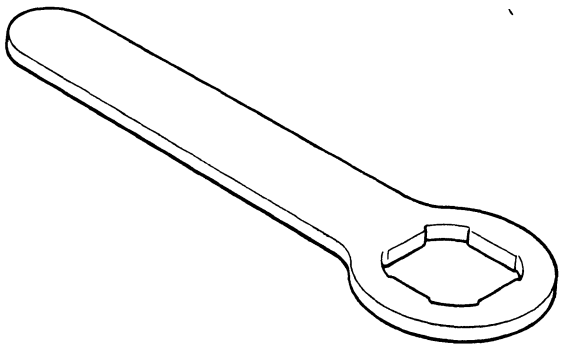

FIGURE 116. SPECIAL SPANNER DB 8009 FOR RING NUT

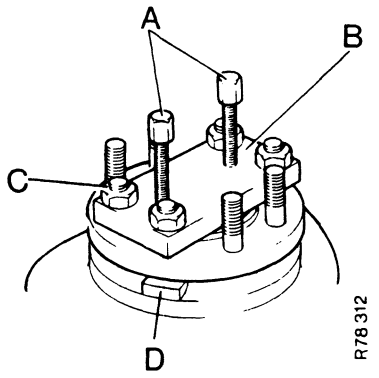

FIGURE 117. REMOVING FINAL DRIVE SHAFT

A. Tool DB900207
B. Special plate
C. Wheel nuts
D. Thrust block

Spur Pinion Shaft Removal

1. Remove the circlip which holds the cover in position over the end of the spur pinion shaft.
2. Hit the splined end of the shaft with a soft face hammer to remove the cover, bearing and shaft.
3. If it is necessary to remove the bearing cups from the casing, use a soft metal punch. Hit all the cups towards the centre of the casing.
4. Make the plate shown in Figure 118. Fasten the plate to the flange of the brake drum removal tool K960618. Put the plate in the groove of the brake disc hub. Use the tool to pull the hub off the shaft.
5. Remove distance piece and bearing if necessary.
   NOTE: If the disc hub only is to be replaced, use the tool to remove hub after the housing has been removed. This will save time.

Inspection of Parts

1. Clean all parts.
2. Look for wear and damage to gears, bearings, shafts and casing.
3. Discard all oil seals and 'O' rings.
4. Check brake components for wear and damage.

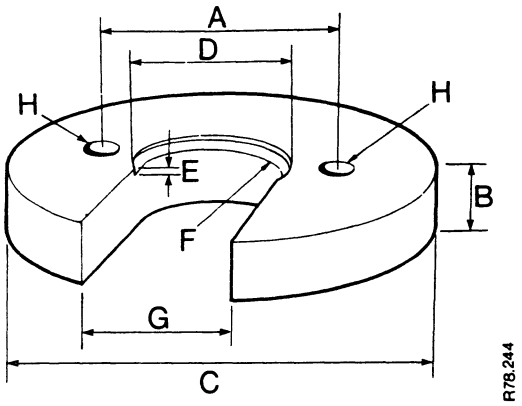

FIGURE 118. TOOL FOR REMOVING DISC BRAKE HUB

A. 105 mm = 4⅛ in centres
B. 20 mm = ¾ in
C. 170 mm = 6¾ in diameter
D. 79 mm = 3 11/32 in diameter
E. 3·2 mm = ⅛ in recess
F. 1·6 mm = 1/16 in radius
G. 67·5 mm = 2 21/32 in
H. Holes with ½ UNC thread

ASSEMBLY

Installing Spur Pinion Shaft

1. Fit the bearings on the spur pinion shaft, thick edges against the gear.
2. Slide the distance piece, chamfers toward inner bearing, on the shaft until against the bearing.
3. Put the keys for the brake disc hub in the grooves of the shaft.
4. Install the brake disc hub with the long splines toward the distance piece. Use a hammer or press and hollow tube for this job.
5. Install the circlip, distance piece and inner bearing cup into the reduction casing. Make sure the thick edge of the cup is against the distance piece.
6. Put grease on the bearings and install the spur pinion shaft into the casing.
7. Install the cup of the outer bearing into the casing.
8. Adjust the bearing preload as follows:
   (a) Install the end cover and circlip without shims.
   (b) Push the cover toward the end of the shaft while turning the shaft to align the bearings.
   (c) Use a feeler gauge to measure the gap between the circlip and the cover.
   (d) Make a note of the smallest measurement.
   (e) Select shims of the same amount as the smallest gap measurement.

   Add 0·076 mm which is the amount of bearing preload needed.
   (f) Remove the circlip and cover and install the correct amount of shims. Install the cover.
   (g) Install the circlip and use a hammer and punch to hit it fully into the groove.

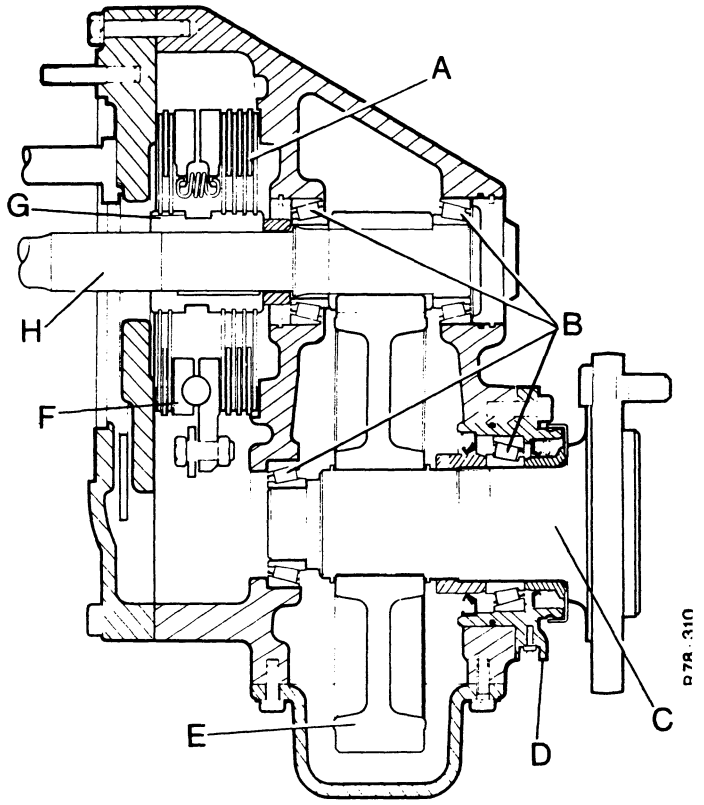

FIGURE 119. FINAL DRIVE ASSEMBLY

A. Brake discs
B. Taper roller bearings
C. Final drive shaft
D. Oil seal housing
E. Spur wheel
F. Brake actuator
G. Hub for discs
H. Spur pinion shaft

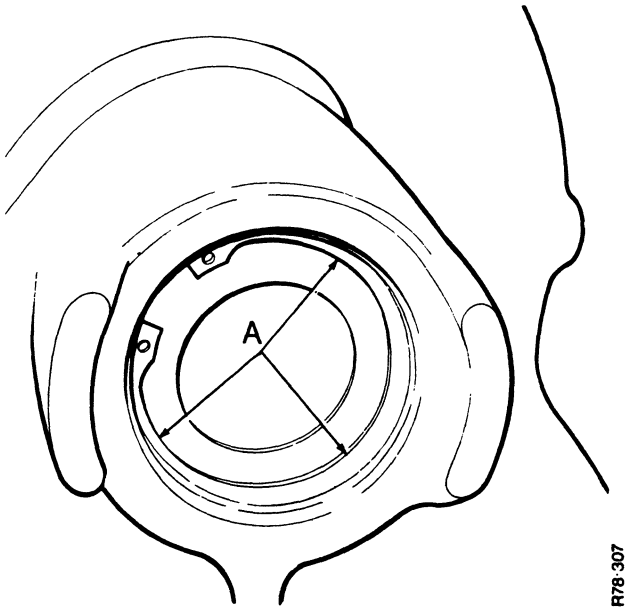

FIGURE 120. BEARING ADJUSTMENT

A. Positions to check gap

0·076 mm = 0·003 in

Installing Final Drive Shaft

1. Put a new 'O' ring on the flange end of the final drive shaft. Install the dirt shield and oil seal collar.
2. Install a new seal in the outer face of the seal housing. Use a steel plate 13 mm thick and 125 mm diameter to press the seal in evenly.
   Make sure the lip is toward the drive shaft flange. Fill seal with heavy duty grease. Install bearing cup into the seal housing, thick edge towards shaft flange.
3. Put a small amount of Loctite 270 in the bore of the bearing cone and install in cup.
4. Use a steel plate 13 mm thick and 138 mm diameter to press a new seal into the inner face of the seal housing. Make sure the lip is toward the spur wheel. Put heavy grade grease in between the seals and on the bearings.
5. Hold the drive shaft flange in a vice and push the seal housing and bearing onto the shaft.
6. Put the special locknut on the drive shaft and tighten with the special spanner, D.B.8009 and 1 kg hammer.
   NOTE: Make sure the nut is tight or rapid wear and damage will be caused to the unit. Use nut K945534 with $\frac{3}{8}$ UNC thread.
7. Put Loctite 270 on the locking screw for the special locknut. Install the screw in a hole which is aligned with a spline groove and tighten.
8. Install the circlip in the groove next to the locknut on tractors before serial number 11204637. After this number a special washer is installed instead of the circlip. The washer is available in different sizes to give 0·10 mm to 0·66 mm shaft end movement. See D Figure 123.
   To find the correct size of washer to use, do the following:
   (a) Put the drive shaft vertical on a bench, flange down.
   (b) Install a special washer and the spur wheel.
   (c) Hold the edge of the circlip in the groove, do not fit it. Measure the gap between the circlip and the spur wheel with a feeler gauge.
   (d) Select and install a washer which gives a clearance of 0·10 mm to 0·66 mm between the circlip and the spur wheel.
9. Press the bearing cup for the inner bearing into the final drive case, thick edge toward axle.
10. Put grease on the inner bearing cone and put in position in the cup.
11. Install the final drive shaft and seal housing without shims and spur wheel. Hit the flange of the drive shaft and turn it at the same time until fully installed.

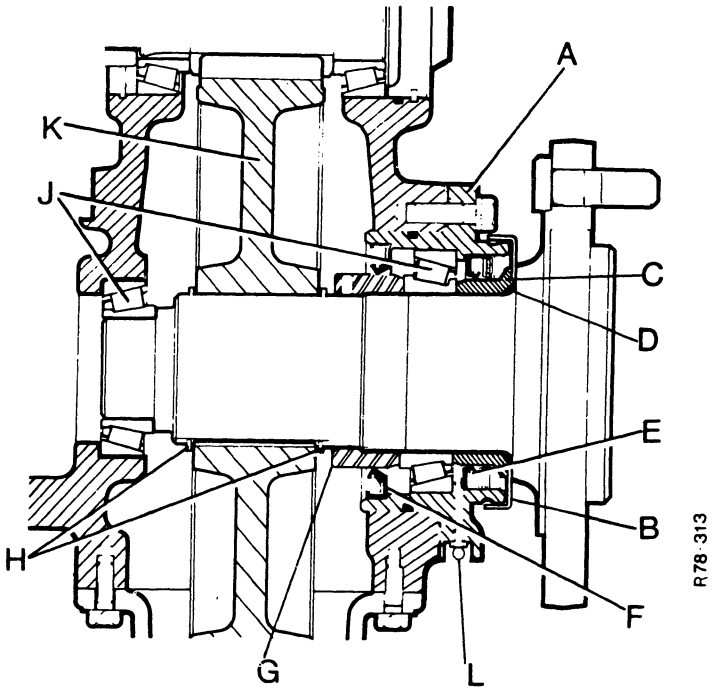

FIGURE 121. FINAL DRIVE SHAFT

A. Seal housing
B. Dirt shield
C. Collar D
D. 'O' ring
E. Oil seal
F. Oil seal
G. Locknut
H. Circlips
J. Bearings
K. Spur wheel
L. Grease fitting

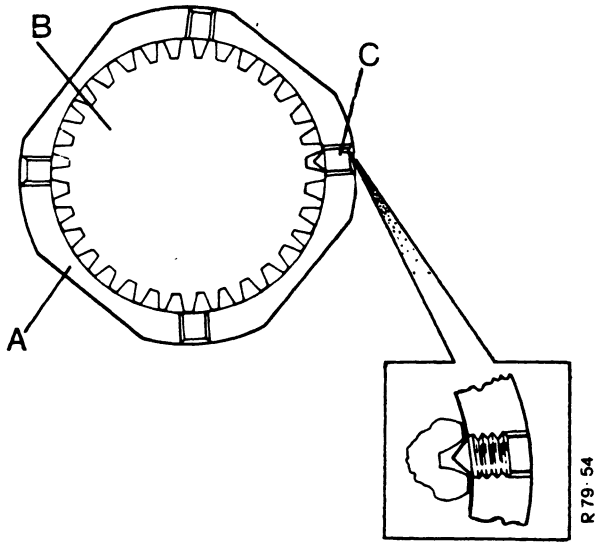

FIGURE 122. LOCKING NUT AND LOCKING SCREW

A. Locknut
B. Drive shaft
C. Locking screw

13 mm = $\frac{1}{2}$ in 125 mm = $4\frac{15}{16}$ in 138 mm = $5\frac{7}{16}$ in	0·10 mm = 0·004 in 0·66 mm = 0·026 in 0·12 mm = 0·0047 in

12. Install three of the seal housing bolts at even distances around the seal housing. Tighten the bolts evenly and turn the shaft at the same time to align the bearings. Tighten until all free movement is just removed.
13. Use a feeler gauge to measure the gap between seal housing and casing at three positions. The gap must be the same at all three positions. Make a note of the measurement.
14. Select shims to an amount of 0·12 mm less than the gap measurement.
15. Remove the drive shaft and install the shims on the seal housing. Install a new 'O' ring on the seal housing.
16. Install the shaft again with the spur wheel in position. When the shaft is through the spur wheel put the circlip on the end of the shaft.
17. Use the setscrews for the seal housing to pull it into place. At the same time use a heavy soft face hammer to hit the flange of the drive shaft.
    Install the circlip into the groove on the shaft.
    Make sure the grease fitting on the seal housing is toward the rear of the tractor.
    Install all the seal housing bolts and tighten evenly.
18. Put grease through the grease fitting until grease comes out from the inside seal.
19. Clean face of case and fit a new gasket and then the cover. Make sure the cover is installed correctly.
20. Use a sling and hoist to lift the reduction unit on to the floor. Put the unit on the floor with the spur pinion shaft vertical and drive flange on the floor.
21. Install the brake discs and brake actuator in the correct sequence. Install the link pins and circlips.
22. Install the brake housing and bolts to the reduction casing and tighten the bolts.
23. Install the shouldered clevis pin on tractors with mechanical brakes. Install a new oil seal and dirt seal on the brake shaft, on tractors with hydraulic brakes. Install the spacer and lever.
24. Install unit on to the tractor, connect and adjust the brakes. Install the covers for the clevis pins.
25. Fill unit with oil to the correct level.

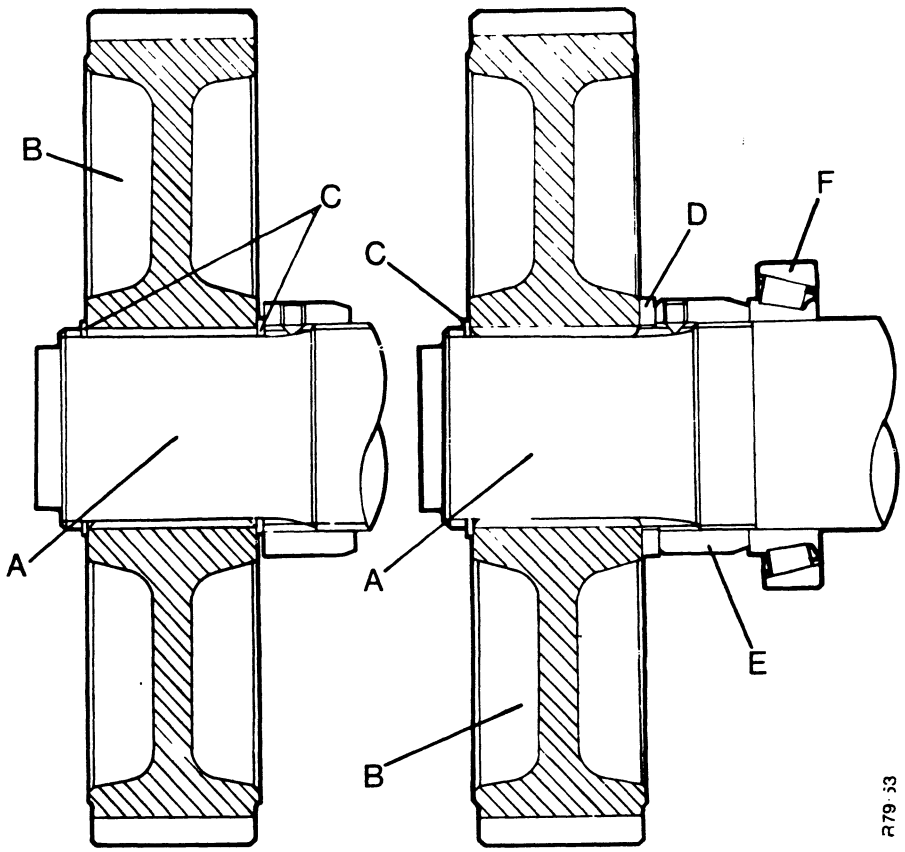

FIGURE 123. FINAL DRIVE SHAFT AND GEAR

A. Drive shaft
B. Drive gear
C. Circlips
D. Special washer, later tractors
E. Special locknut
F. Bearing

REAR AXLE CASE OIL SEALS

There are two oil seals installed at each end of the axle case.

Removing the Oil Seals

1. Use the Service Tool K900208 shown in Figure 124 to remove the seal housing.
2. Use two ½ BSF × 2 in bolts to fasten the tool to the housing.
3. Install the two special bolts (900207) in the tool.
4. Tighten the bolts evenly to pull the housing out of the axle case.
5. Remove the oil seals from the housing.

Installing the Oil Seals

1. Clean the oil seal housing and the inside of the axle case.
2. Push a new seal in position in the bore of the housing.

   Make sure that the seal lip is away from the housing shoulder, on 1210 tractors and toward it on the 1410 tractor. Use an acceptable piece of metal or wood, 76 mm diameter, to push the seal to the end of the housing bore.

NOTE: On 1410 tractors the oil seals must be installed back to back in the housing, lips outward.

3. Put the second new seal in position in the bore of the housing. Push in until level with the housing. Make sure that the seal lip is away from the housing shoulder.

   Use the same piece of wood or metal to push the seal in the housing until it is level with the housing edge.
4. Put grease in the space between the oil seals, on 1210 tractor.
5. Put jointing compound on the outside of the housing.
6. Use a soft faced hammer to hit the housing into position in the axle case. The two holes in the housing must be horizontal.

BREATHERS

On 1410 tractors there is a breather plug installed in the end flanges of the axle case. Make sure these are free from any restrictions. Remove and clean with kerosene and compressed air if necessary.

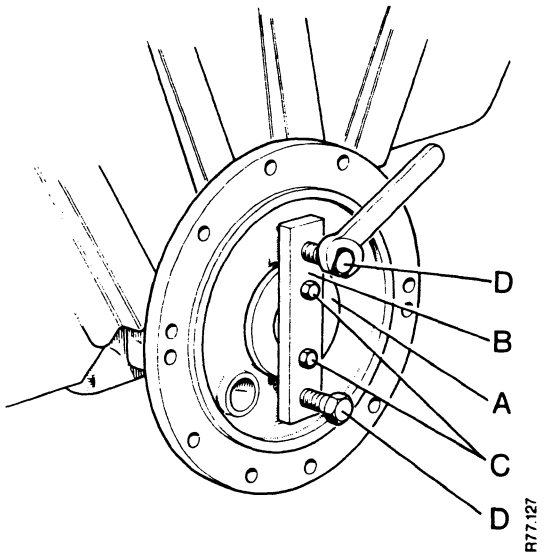

FIGURE 124. REMOVING OIL SEAL HOUSING FROM AXLE CASE

A. Oil seal housing *C. Bolts into seal housing*
B. Bridge piece *D. Extraction bolts*

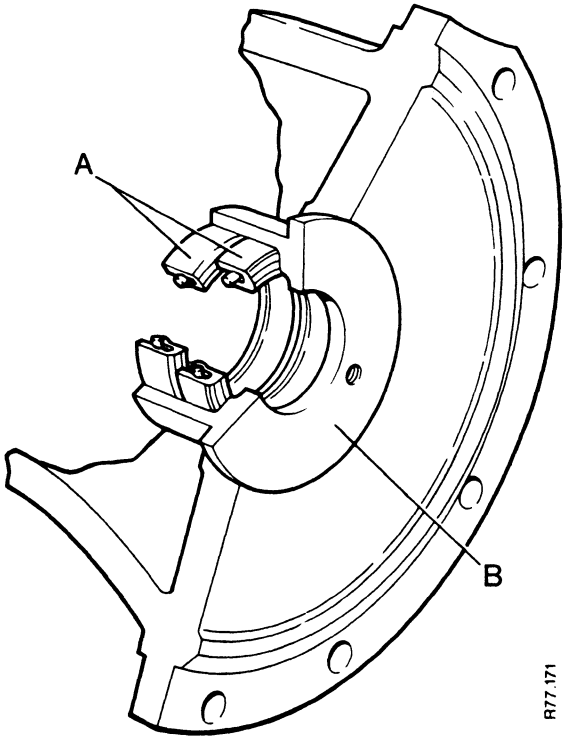

FIGURE 125. REAR AXLE CASE OIL SEALS 1210 TRACTOR

A. Oil seals *B. Seal housing*

76 mm = 3 in

BRAKES

DRUM BRAKES: 1210 TRACTOR

OPERATION

The brake system has a separate pedal and linkage connected to each brake unit on each side of the rear axle. The shoe assemblies are installed on the ends of the axle case. The brake drums are installed on the spur pinion shafts of the final drive units.

The pedal on the left operates the brake on the left-hand side. The pedal on the right operates the brake on the right-hand side. The single pedals are used to give assistance to the steering for tight turns. For normal brake operation the pedals must be connected together by the locking plate on the left-hand pedal. The handbrake operates both brakes through the same linkage.

DANGER: ***Always connect the brake pedals together for normal braking. The tractor will make a sudden turn which can cause a roll-over if the pedals are not connected. This can cause serious injury or death.***

BRAKE ADJUSTMENT

1. Put the tractor on hard and level ground.
2. Put wedges of wood under the front and rear of the front wheels.
3. Use a jack to raise the rear of the tractor until the rear wheels are just clear of the ground.
4. Put supports between the rear axle case and the ground for safety.
5. Disengage the pedal locking plate.
6. Adjust the left-hand brake rod until the left-hand wheel will not rotate. This centralises the brake shoes.
7. Loosen the left-hand brake rod adjuster until the left-hand wheel can be rotated easily. The shoes are permitted to just make contact with the drums.
8. Repeat steps 1 to 7 on the right-hand brake.

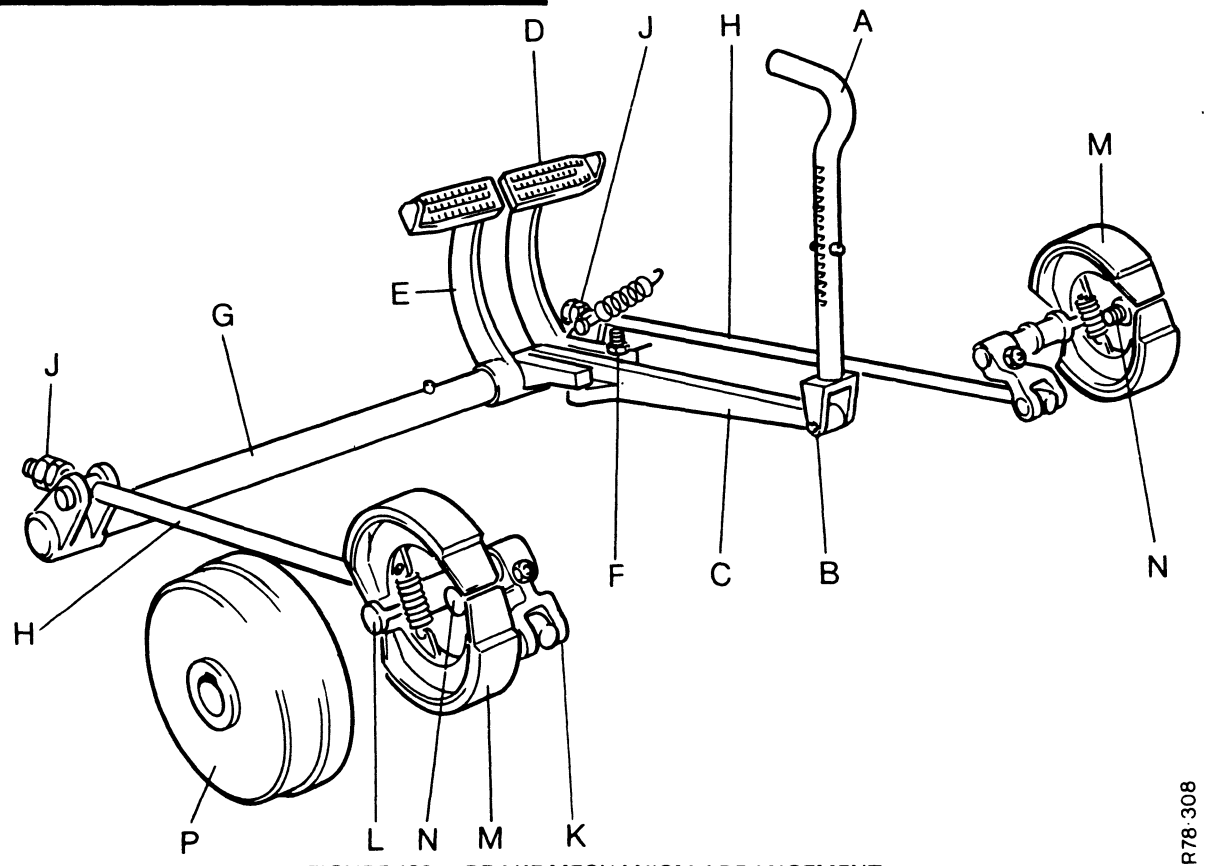

FIGURE 126. BRAKE MECHANISM ARRANGEMENT

A. Hand lever
B. Fork
C. Operating lever
D. Right-hand pedal
E. Left-hand pedal
F. Adjusting screw
G. Cross shaft
H. Brake rod
J. Adjusting nut
K. Camshaft lever
L. Camshaft
M. Brake shoe
N. Pin
P. Brake drum

9. Pull the hand brake on one tooth of the ratchet.
   Check the position of the pedals.
   If the R.H. pedal is in front of the L.H. pedal, adjust the L.H. rod until the locking plate can be engaged.
   If the L.H. pedal is in front of the R.H. pedal, adjust the R.H. rod until the locking plate can be engaged.
10. Check that the resistance of the rear wheel to rotate is the same.
11. If there is any difference, adjust the R.H. rod until both wheels have the same resistance to rotate.
12. Pull the hand brake on one more tooth of the ratchet and check the resistance of the wheels to rotate again. Repeat step 11 if necessary.
13. Repeat step 12 until both rear wheels are locked at the same time.
14. Hold the adjusting nuts stationary and tighten the locknuts on the brake rods.
15. Test the tractor on the highway and make any final adjustments if necessary.
    NOTE: Use a low speed at the start of the test. Use a dry level surface for the test.
16. If for any reason the brake cross-shaft has been disassembled or the pedals replaced, do the following.
    (a) Pull the hand brake on five teeth of the ratchet.
    (b) Adjust the R.H. pedal until the locking plate can be engaged. Tighten the Locknut for the adjuster.
    (c) Adjust the brakes as in steps 1 to 15.
    NOTE: Normally pedal adjustment is not necessary.

INSTALLING NEW LININGS

1. Use a drill to remove the head at the hollow end of the rivets.
2. Use a hammer and punch to remove the rivets from the shoes.
3. Remove the old lining and clean the shoe.
4. Put the new lining in position on the shoe and check that the hole in the lining and shoe align.
5. Install the new rivets starting at the centre of the lining and working toward the ends.
6. Make sure there are not any gaps between the lining and the shoe after it is installed.
7. Keep the shoes and linings away from oil and grease.

NOTE: If there is oil on the old linings, install new oil seals before the new shoes or linings are installed.

INSTALLING NEW BRAKE SHOES

1. Remove the final drive unit from the rear axle, see page 34 for procedure.
2. Remove the brake shoes and springs from the axle flanges.
3. Clean the axle flanges and install new shoes and springs.
4. Check the brake drum for damage and wear. Install a new drum if necessary.
5. Repeat step 1 to 4 on the other side.

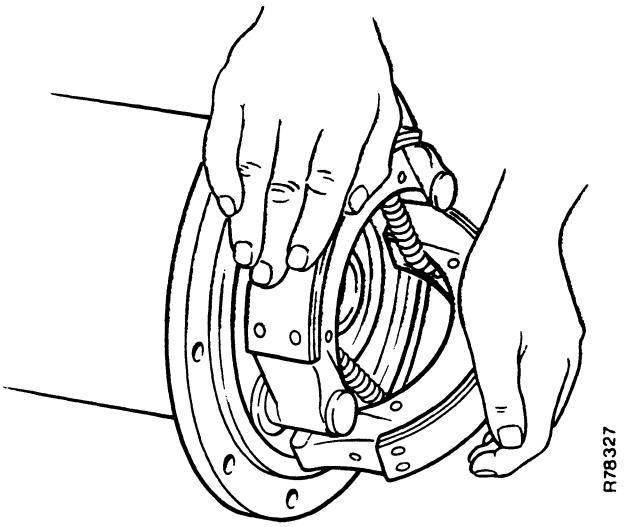

FIGURE 127. INSTALLING BRAKE SHOES

DISC BRAKE UNIT: 1410 TRACTOR

HOW IT WORKS

The brake assemblies are installed in each final drive housing. Each unit has an actuator, four stationary discs and six discs which can rotate. The six discs which can rotate are connected by splines to the spur pinion shaft. The discs have a special friction face on each side. The stationary discs are held stationary by a large steel pin in the casing. The actuator has two separate plates pulled together by tension springs and separated by six steel balls. The steel balls roll in grooves which have a gradient. Each plate of the actuator is fastened to the brake operating linkage. When the brake is operated the linkage rotates the two plates in opposite directions. This causes the steel balls to roll up the gradient of the grooves and separate the plates. The plates press the discs against each other and against the housing which applies the brakes.

Each actuator plate has a rotating disc next to it. When the brake is applied, these discs try to rotate the actuator in the direction of rotation. See Figure 130.

One actuator plate moves until it comes in contact with a lug on the casing.

The other plate is free to move in the direction of rotation of the discs.

The more the plate moves, the more the plates are separated. This applies more pressure to the discs without more pressure being needed on the foot pedal.

When the brake is released, the tension springs pull the actuator plates together and release the discs.

A pedal is installed for each brake assembly so it can be operated separately for tight turns with the steering. A single pedal is installed between these two pedals for normal braking. See Figure 131.

DANGER: ***Never use the outside pedals when travelling on the highway or at speed. The tractor will make a sudden turn which can cause a roll-over. This can cause serious injury or death.***

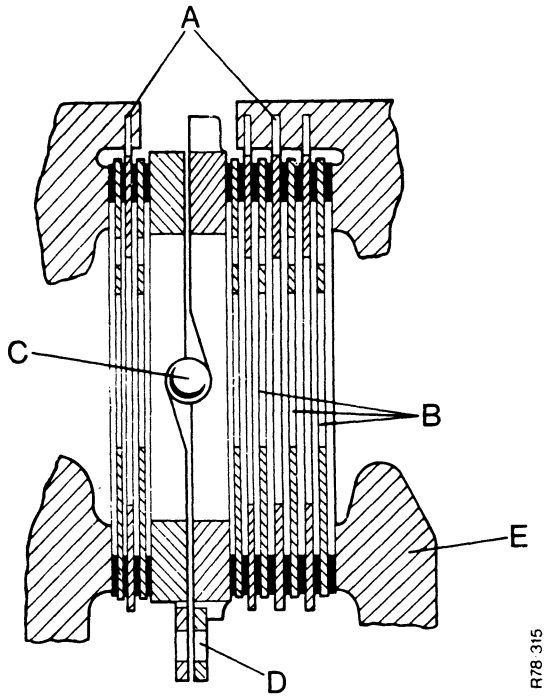

FIGURE 128. ACTUATOR AND DISCS

A. Stationary discs
B. Rotary discs
C. Steel ball
D. Actuator plates

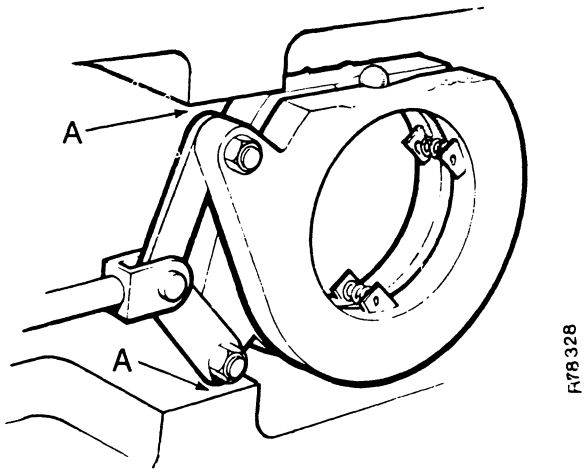

FIGURE 129. BRAKE RELEASED

A. Clearance between both links and stop lugs on housing

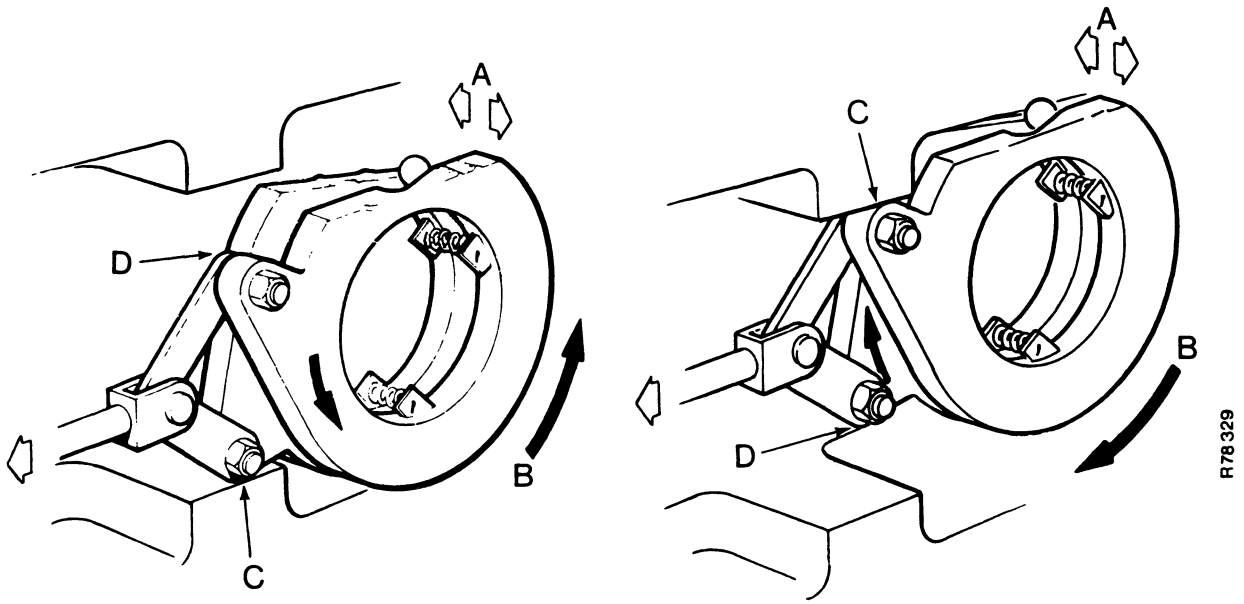

FIGURE 130. OPERATION OF ACTUATOR ASSEMBLY

A. Movement of plates
B. Direction of rotation of shaft and discs
C. Plate in contact with stop lug
D. Plate clear of stop lug

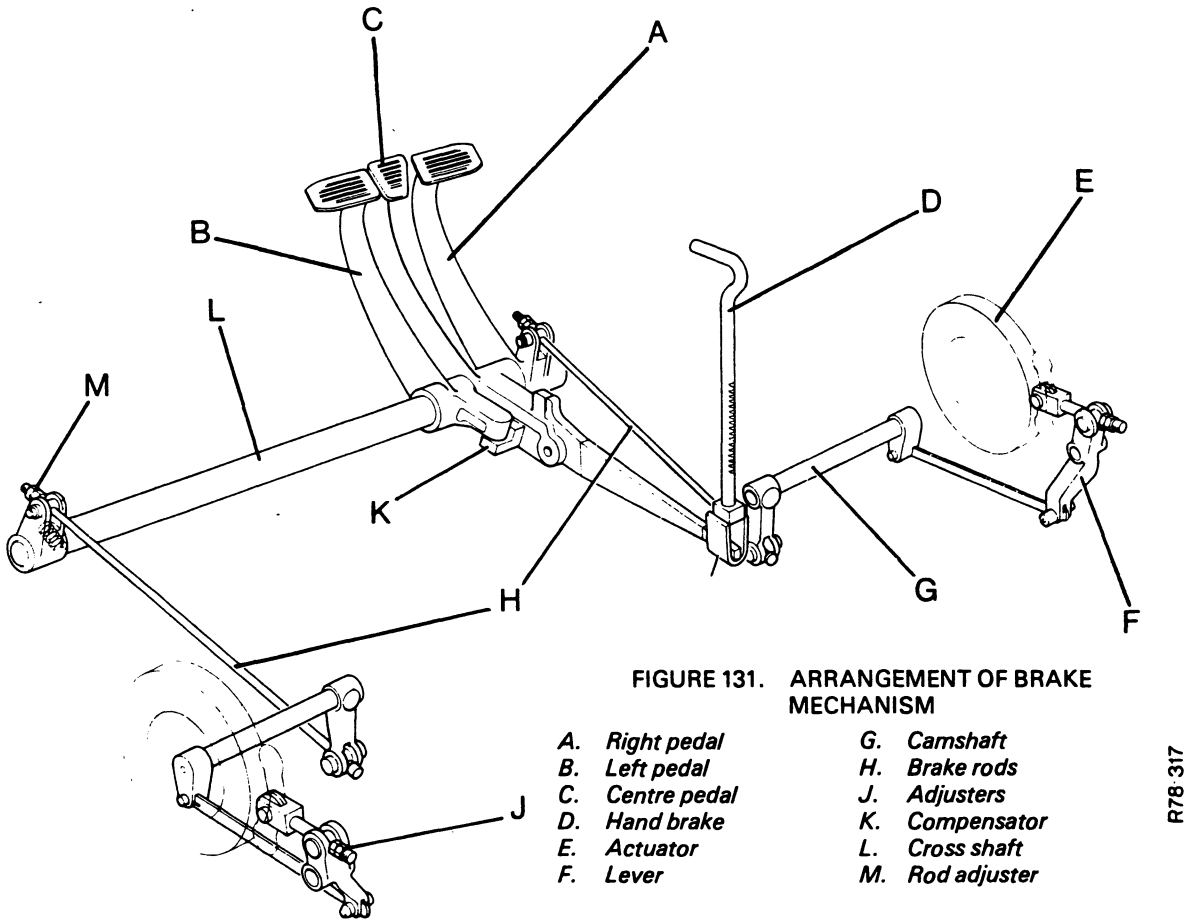

FIGURE 131. ARRANGEMENT OF BRAKE MECHANISM

A. Right pedal
B. Left pedal
C. Centre pedal
D. Hand brake
E. Actuator
F. Lever
G. Camshaft
H. Brake rods
J. Adjusters
K. Compensator
L. Cross shaft
M. Rod adjuster

MAINTENANCE

Lubrication

Grease fittings are installed on the centre and left-hand pedals, compensator beam and brake housing. Use a grease gun to put grease through the fittings every 60 hours.

Disc and Rod Adjustment

1. Put the tractor on level ground and put wedges to front and rear of the wheels to prevent the tractor moving. Release the hand brake.
2. Clean around the access plugs for the brake adjusters then remove the plugs. See Figure 133.
3. Clean around the clevis pin covers then remove the covers. See Figure 133.
4. Make a line between the centres of the two front setscrew holes. See A Figure 133.

   Measure the distance between the line and the front edge of the clevis pin. The measurement must be 25 mm.

   Do steps 5 to 11 if the measurement is not 25 mm.

   Do step 12 if the measurement is 25 mm.

   NOTE: The measurement at A Figure 133 will not be 25 mm if:
   (a) the nuts M Figure 131 which adjust the pull rods, have been used to adjust the brakes,
   (b) the tractor is an early model, which had a setting of 65 mm pedal movement,
   (c) the cross-shaft has been disassembled to remove it or fit new pedals or foot plate.
5. Turn the adjuster nut, C Figure 133, counter-clockwise three full turns.
6. Loosen the bolts which fasten the stop plate to the right-hand foot plate.
7. Pull the centre foot pedal up until the pedal and hand brake operating lever are aligned.

   Slide the stop plate against the centre pedal.
8. Loosen the locknuts on the adjuster screws in the pedal compensator.

   Loosen the adjuster screws.
9. Pull the right and left-hand pedals up to the stop plate. Make sure that the foot pads are aligned, tighten the bolts which fasten the stop plate.
10. Hold the three pedals against the stop plate. Put the compensator parallel with the foot plate surface. Turn the adjuster screws evenly until against the left and right-hand brake pedals. Tighten the lock nuts.
11. Adjust the length of the pull rods H Figure 131 by turning nut M.

    Do this until the measurement at A Figure 133 is 25 mm. Tighten the lock nuts when the measurement is correct. Do not use these nuts for future adjustment for disc wear.

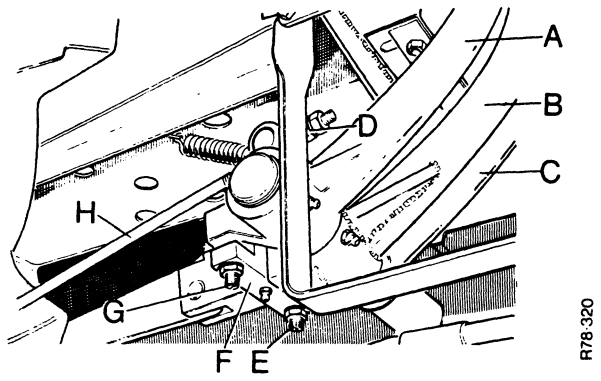

FIGURE 132. BRAKE PULL ROD ADJUSTMENT

A. Right-hand pedal
B. Centre pedal
C. Left-hand pedal
D. Adjuster nut on pull rod
E. Compensator adjuster screw
F. Compensator
G. Adjuster screw
H. Pull rod

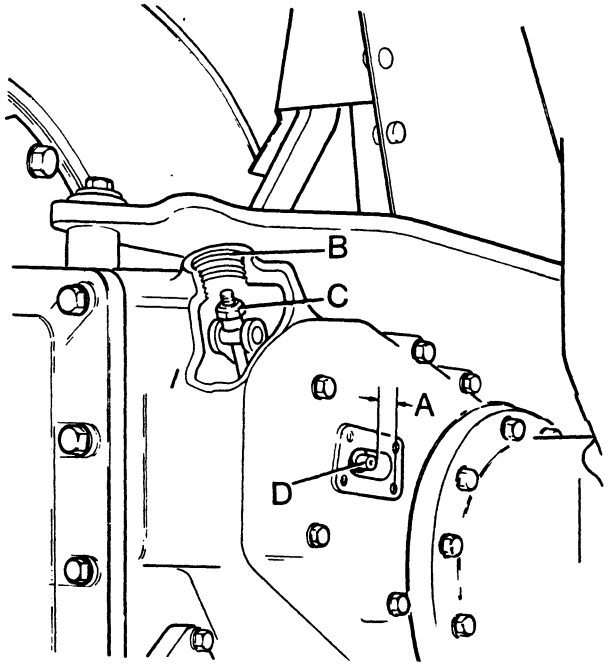

FIGURE 133. DISC ADJUSTMENT

A. Setting, 25 mm (1 in)
B. Access hole to adjuster
C. Adjuster nut
D. Clevis pin
NOTE: Clevis pin not installed on tractors with hydraulic brakes.

25 mm = 1 in
32 mm = 1¼ in
38 mm = 1½ in

12. Adjust the adjuster nut C Figure 133 until the complete movement of the pedal is 32 to 38 mm. This movement is from the brake fully released to the brake fully engaged.
13. Repeat steps 4 to 12 on the other brake assembly.

NOTE: When the setting is correct at A Figure 133, normal brake adjustment must only be done by using nut C Figure 133. The nut must be adjusted until the pedal movement is correct.

When the brakes are operated, if the engagement is sudden, check the following:

(a) Brake adjustment
(b) Clevis pin adjustment
(c) Compensator beam adjustment.
(d) Correct grade and amount of oil in the housing.
(e) Clearance between the face of the housing and the first rotary disc, this must be between 0·43 and 3·12 mm.

If the clearance is more than 3·12 mm add an extra stationary disc.

This must be installed in the position shown at D Figure 134.

NOTE: The clearance must not be less than 0·43 mm after the extra disc has been installed.

Every 60 hours or weekly, remove any chemicals or manure from steel brake pipes. These two materials cause corrosion.

Every 500 hours or six monthly check all steel pipes for corrosion and damage. Replace any pipes which are found corroded or damaged.

DANGER: ***Manure and chemicals cause corrosion to brake pipes, this can cause brake failure. Clean and check brake pipes at regular intervals. Serious injury or death can be caused if the brakes fail.***

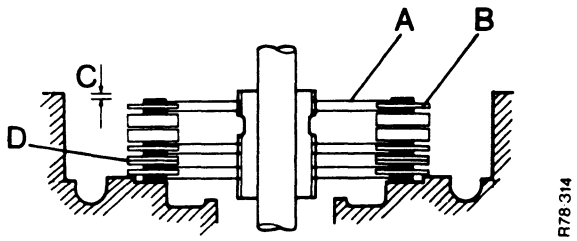

FIGURE 134. DISC BRAKE ASSEMBLY

A. Rotary disc (Bronze)
B. Stationary disc (Steel)
C. Clearance between top disc and housing
D. Extra steel disc No. K945755

0·43 mm = 0·017 in
3·12 mm = 0·123 in
25 mm = 1 in
32 mm = 1¼ in
38 mm = 1½ in
65 mm = 2½ in

DISASSEMBLY

After the final drive has been removed from the tractor use the following procedure to disassemble:

1. Put the final drive on the floor with the spur pinion shaft up vertical. Put a block of wood under the unit to hold it in this position.
2. Remove the small cover on the brake housing. Remove the shouldered clevis pin.

   Use one of the cover bolts in the threaded hole of the pin if it is tight.

   Remove the operating lever, spacer and dirt shield on tractors with hydraulic brakes.
3. Remove the bolts which fasten the brake housing to the final drive casing.

   Lift the housing clear of the spur pinion shaft.

NOTE: The operating link comes away with the housing but the pivot lever does not. The adjuster will have to be released if the lever will not clear the housing.

4. Remove the circlips from the link pins.

   Remove the pins. Lift out the top discs.
5. Remove the actuator assembly with operating shaft and linkage.

   Remove the remainder of the discs.
6. If necessary, remove the disc hub from the spur pinion shaft. This can be done without removing the discs and actuator if the hub only is to be replaced.
7. Put all the parts on the bench in the sequence of removal.

Disassembly of the Actuator

1. Remove the pin which fastens the operating rod to the links.

   Remove the bolts and nuts which fasten the links to the plates.
2. Remove the tension springs which hold the actuator plates together.
3. Separate the plates and remove the six steel balls.
4. Check all parts for wear and damage.

   Replace any part which has a defect.

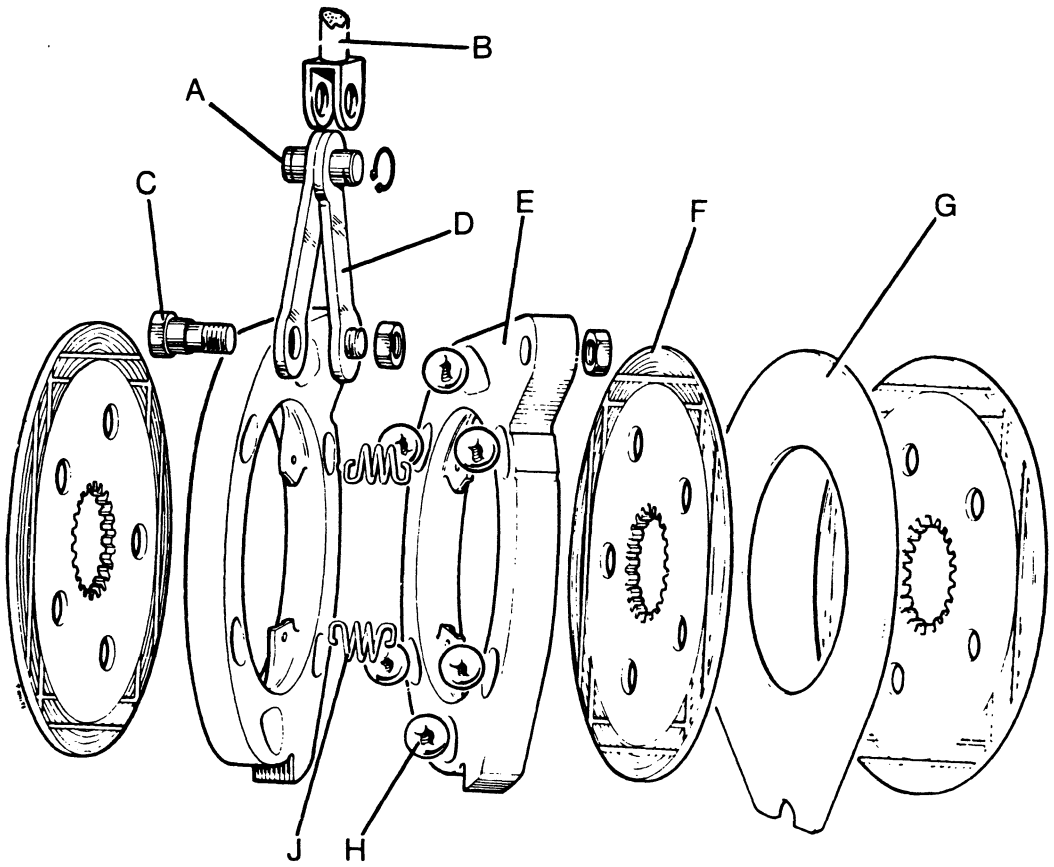

FIGURE 135. COMPONENTS OF DISC BRAKE

A. Pin, link to pull rod
B. Pull rod
C. Bolt, link to plate
D. Link
E. Actuating plate
F. Rotary (Bronze) disc
G. Stationary (Steel) disc
H. Steel ball
J. Tension spring

ASSEMBLY

1. Put an actuating plate on the bench with the grooves, for the balls, upward. Put the six balls in the grooves.

   Install nuts and bolts to links and tighten to 41 Nm. Use a sharp punch to lock the nut in position.
2. Put the other plate on top, then make sure the links are in the correct positions.
3. Check that the balls are in the grooves then install new tension springs.
4. Connect the links to the operating rod.
5. Use a press or a hammer, and a hollow tube to install the disc hub on the spur pinion shaft.
6. Install one of the rotary discs on to the disc hub. Install a stationary disc on top of the rotary disc.
7. Repeat step 6 two more times then install the actuator.
8. Install a rotary disc, stationary disc and then a rotary disc, in that sequence on top of the actuator.
9. Install the link pins and circlip.
10. Install the housing and fasten the bolts.
11. Install the shouldered clevis pin on tractors with mechanical brakes.
12. Install a new oil seal, and dirt seal on the operating shaft on tractors with hydraulic brakes. Install the spacer and the operating lever on the shaft. Install the cotter pin and tighten.
13. Install the final drive on the tractor and adjust the brakes.
14. Install the small cover over the clevis pin.
15. Fill the unit with the correct oil to the correct level.

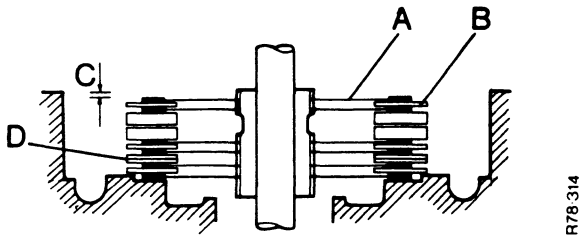

FIGURE 136. DISC BRAKE ASSEMBLY

A. Rotary (Bronze) plate
B. Stationary (Steel) plate
C. Clearance of brake plate below housing joint.
D. Additional steel plate K945755

41 Nm = 4·1 kgm = 30 lb ft

HYDRAULIC BRAKES

HOW IT WORKS

The hydraulic system is used on tractors which have a Q-Cab or De-Luxe Cab. The disc assemblies and brake drums are the same as for tractors without a cab. Each brake unit is operated, through hydraulic pipes, by a slave cylinder instead of rods and levers.

A single reservoir is used for the brake fluid. This is connected to two separate master cylinders which are operated by separate pedals. The master cylinders are connected to a balance valve which is connected to the slave cylinders.

Each slave cylinder has a spring connected to the cam lever which retracts the piston. The fluid is then pushed back into the reservoir through the master cylinder when the brake is released.

⚠ DANGER: *Only the correct fluid must be used in the system. These are Shell Tellus 37 or Castrol Hyspin AWS 32. Normal brake fluid MUST NOT be used. If any other oil is used, brake failure will occur and cause injury or death.*

For brake operation on one wheel only one pedal is used. For normal brake operation the pedals must be connected together by the link between the pedals. A brake balance valve is installed in the system to give equal braking.

The left-hand pedal operates the left-hand brake.

The right-hand pedal operates the right-hand brake.

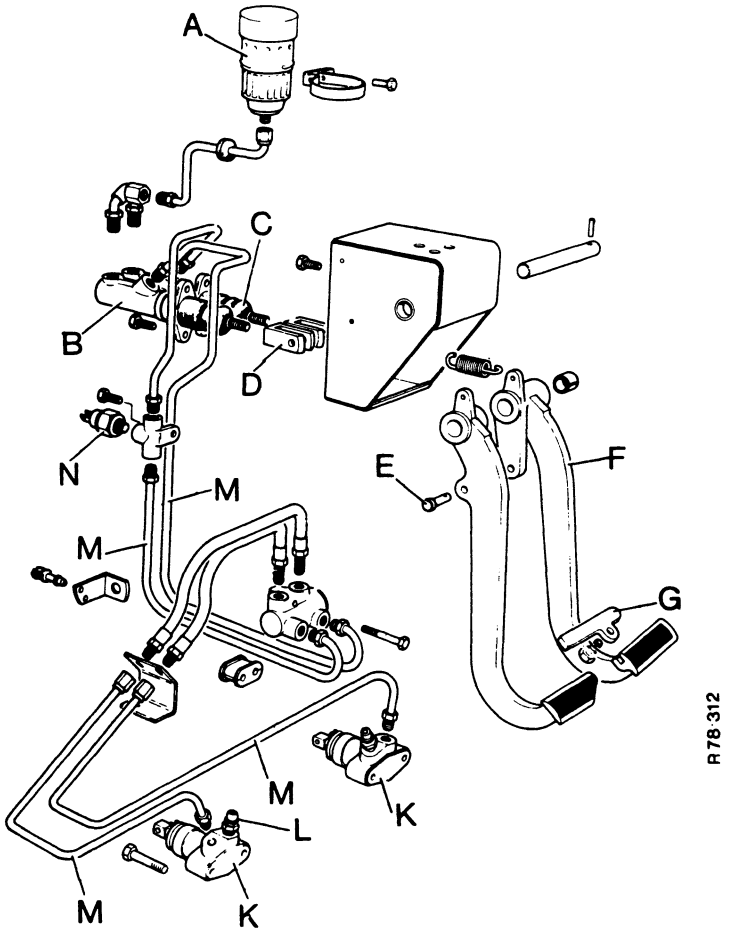

FIGURE 137. HYDRAULIC BRAKE SYSTEM

A. Reservoir
B. Master cylinder
C. Push Rod
D. Fork
E. Pin, pedal to fork
F. Pedal
G. Locking plate
H. Balance valve
J. Flexible pipes
K. Slave cylinder
L. Bleed screw
M. Steel pipes
N. Stop lamp switch

BALANCE VALVE

The balance valve has a plunger which has a seal around the centre. The plunger is installed in the bore of the valve and is held in the centre position by a spring. One end of the bore is connected to one side of the system, the other end to the other side. Inlet pipes are connected to the master cylinders and outlet pipes to the slave cylinders.

When the left-hand brake pedal is operated, the plunger moves to the right until against a stop, B Figure 138.

When the right-hand brake pedal is operated, the plunger moves to the left until against a stop, C Figure 138.

When both pedals are operated together, the plunger moves until the pressure is equal each end. This gives equal brake pressure to each side of the system. The plunger changes position according to different amounts of wear, adjustment, or pedal movement between each side.

NOTE: The valve cannot be repaired. Install a new valve if a fault is found.

REMOVING THE BALANCE VALVE

The valve is fastened to the front cross member under the cab. Access is under the rear of the cab.

1. Put a container under the valve for the fluid to drain into.
2. Make a note of where each flexible pipe is connected then disconnect the pipes.
3. Disconnect the two steel pipes.
4. Remove the bolts which fasten the valve to the cross member.

INSTALLING THE BALANCE VALVE

1. Fasten the valve to the cross member.
2. Connect all pipes.
3. Use the same procedure as for the master cylinder to remove air from the system.

NOTE: The balance valve cannot be repaired. If there is a fault, install a new unit.

WARNING: ***Make sure all brake pipes are fastened correctly and do not have contact with moving parts. This includes cab and chassis parts. A broken pipe will cause injury or death.***

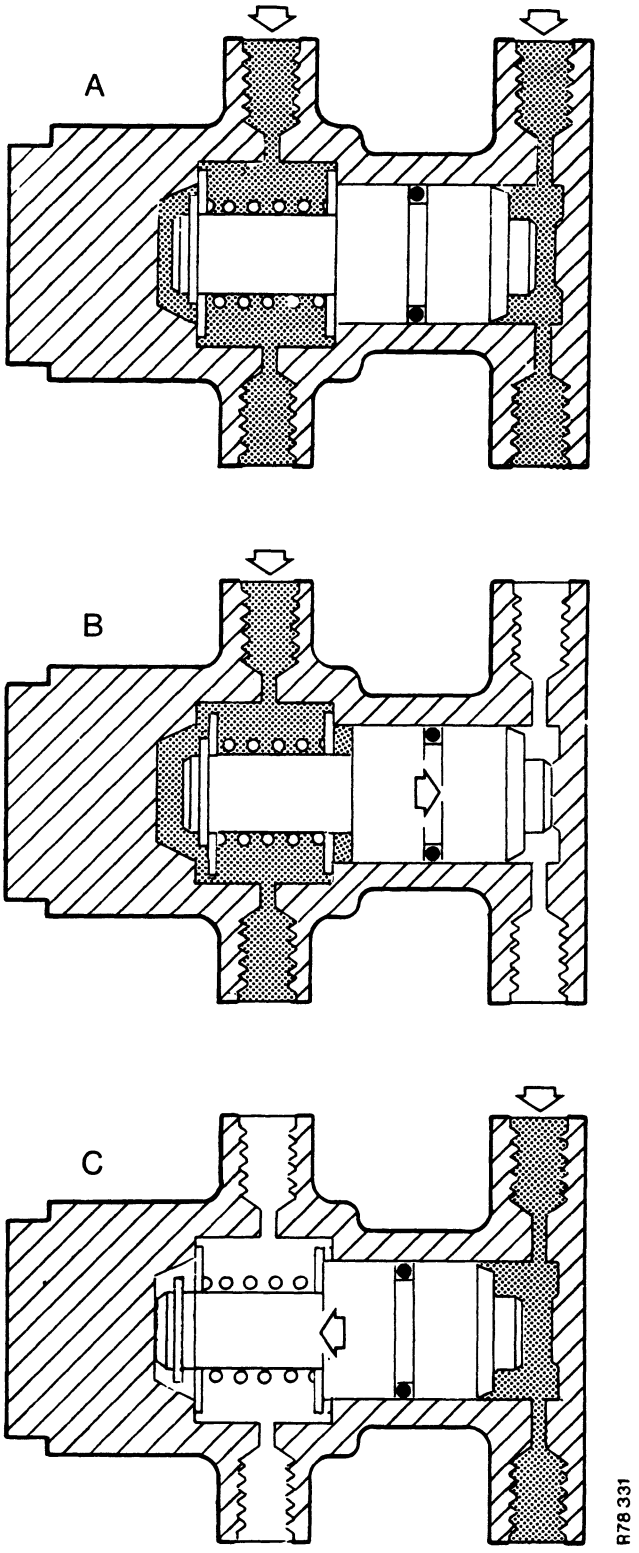

FIGURE 138. VALVE OPERATION

A. Both brakes applied
B. One side only applied
C. Opposite side only applied

REMOVING A MASTER CYLINDER

1. Put a container under the master cylinders. Disconnect the feed pipe from the brake fluid reservoir. Let the fluid drain into the container.
2. Remove the link pipe between the cylinders.
3. Disconnect the pipe to the balance valve. Remove completely if removing the right-hand master cylinder.
4. Remove the reservoir feed pipe.
5. Disconnect the push rod from the pedal.
6. Remove the setscrews which fasten the cylinder to the body. Remove the cylinder.

INSTALLING A MASTER CYLINDER

1. Put the cylinder in position on the bulkhead.
2. Install the setscrews and tighten.
3. Install the hydraulic pipes.
4. Connect the pedals together with the link.
5. Install the push rod in position and adjust the fork until the pin can be installed easily. Do not move the piston of the cylinder.
6. Fill the reservoir to the correct level with the correct oil.
7. Remove air from the system.

REMOVING A SLAVE CYLINDER

1. Disconnect the return spring from the operating lever.
2. Remove the pin which connects the cylinder push rod to the operating lever.
3. Put a clamp on the flexible pipe and disconnect the pipe to the cylinder.
4. Remove the nuts and bolts which fasten the cylinder to the tractor.

NOTE: On 1210 tractor, also remove the guard.

INSTALLING A SLAVE CYLINDER

1. Fasten the cylinder to the tractor.
2. Connect the pipe, remove pipe clamp.
3. Install the pin and return spring to the operating lever.
4. Use the same procedure as for a master cylinder to remove air from the system.

5 mm = $\frac{3}{16}$ in

REMOVING AIR FROM SYSTEM

1. Loosen the bleed screw on one of the slave cylinders.
2. Use a piece of plastic or rubber tube which has a 5 mm bore. Push one end of the tube on the bleed screw. Put the other end of the tube in a clear container. Add brake oil to the container until the end of the tube is below the surface.
3. Get assistance to press the pedal down. Close the bleed screw just before the pedal is fully down. Release the pedal and then loosen the bleed screw again.
4. Repeat this procedure until no air bubbles come from the end of the tube. Tighten the bleed screw.
5. Do the same on the other side of the system until all air is removed.

NOTE: Keep the reservoir full while doing the operation or air will enter the master cylinder.

The system can be filled through the bleed screws by using a pressure oil can connected to a bleed tube. Add brake fluid by this method until the reservoir is at the correct level. Make sure the oil can is kept full during the operation. If the pedal feels hard after this method is used, removal of air will not be necessary.

WARNING: ***DO NOT use the oil can for any other use. Brake failure will occur if oils are mixed. This can cause injury or death.***

BRAKE DEFECTS

1. If the pedal feels soft when the brake is operated then there is possibly air in the system. Use the procedure as for master cylinder to remove the air.
2. If the pedal is still soft after the correct procedure has been followed, do the following:
   (a) Fasten a Girling T3 clamp to the flexible hose of the system being checked. (Left or Right).
   (b) Press the pedal. If it is still soft then the master cylinder needs servicing or replacing. If the pedal is hard the slave cylinder needs servicing or replacing.
   (c) Remove the cylinder which has the defect and repair or install a new cylinder. Remove the air from the system as before and check.
3. If the brakes do not release correctly:
   (a) Check that the push rod is not holding the piston in the master cylinder.
   (b) Check to see if the piston has seized in.
   (c) Disassemble the master cylinder and check the seals if (a) and (b) are correct. Check that all oil holes are free from restrictions.

BRAKE ADJUSTMENT: 1210 TRACTOR

1. Put wedges of wood in front of and behind each front wheel. This will prevent movement of the tractor. Release the handbrake.
2. Use a jack to raise one rear wheel clear of the ground. Put a support under the axle.
3. Release the locknut A Figure 139.
4. Use a $\frac{15}{16}$ AF spanner to tighten the adjuster bolt B until the wheel cannot be rotated by hand.
5. Release the adjuster until the wheel can be rotated easily by hand.
6. Repeat 2 to 5 on the other wheel.
7. Add brake fluid to the reservoir if necessary.

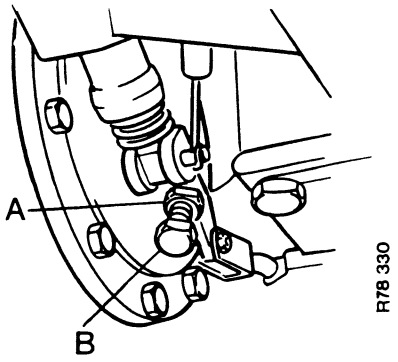

FIGURE 139. 1210 BRAKE ADJUSTMENT

A. Locknut *B. Adjuster bolt*

BRAKE ADJUSTMENT: 1410 TRACTOR

1. Put wedges of wood under the front and rear of the front wheels.
2. Use a jack to raise one rear wheel clear of the ground. Put a support under the main frame.
3. Release the handbrake and make sure the slave cylinder pistons are fully retracted.
4. Remove the access plug for the adjuster.
5. Turn the adjuster nut clockwise until the wheel cannot be turned by hand.
6. Loosen the adjuster nut $2\frac{1}{2}$ turns counter-clockwise.
7. Repeat the adjustment on the other wheel then lower the tractor to the ground.
8. Pull the handbrake lever up fully. The brakes must be fully engaged on the third ratchet of the handbrake. Adjust the cables at the compensator bar if adjustment is necessary. Keep the compensator bar level.
9. Check the amount of movement of each pedal. The amount must be the same for both pedals. Make small adjustments if necessary and install the access plugs for the adjusters.
10. Connect the pedals together with the link and test the brakes for equal efficiency.
11. If the brakes do not work equally check the balance valve as follows:
    (a) Put a foot on each pedal.
    (b) Push down on one pedal. The other pedal must raise.
    (c) Push down on the other pedal and the opposite pedal must raise.
    (d) If the pedals do not raise as above then the balance valve piston has seized.

    Install a new balance valve complete, parts are not available.

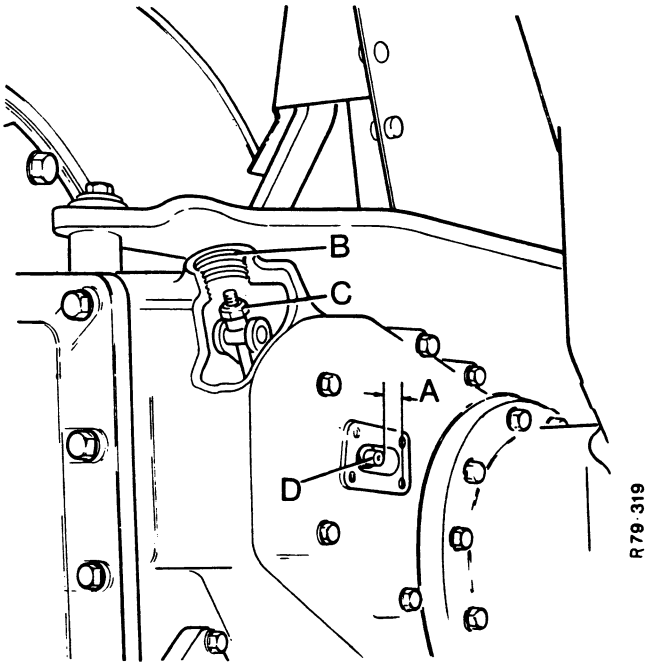

FIGURE 140. 1410 BRAKE ADJUSTMENT

A. Setting 25 mm (1 in) *C. Adjuster nut*
B. Access hole to adjuster *D. Clevis pin*

SPECIFICATION AND DATA

CAPACITIES

		Imperial	U.S.
Gearbox and axle: 1210, 1410	46·5 litre	10¼ gal	12·6 gal
Gearbox, transferbox and axle: 1210 4WD, 1410 4WD	49·0 litre	10¾ gal	12·9 gal
Final drive unit: 1210 (each)	2·3 litre	4 pt	2·4 qts
Final drive unit: 1210 4WD (each)	2·3 litre	4 pt	2·4 qts
Final drive unit: 1410 (each)	7·4 litre	13 pt	7·8 qts
Final drive unit: 1410 4WD (each)	13·6 litre	3 gal	3·6 gal

DIMENSIONS

Gearbox and Differential		
Muff coupling clearance	0·20-1·02 mm	0·008-0·040 in
Gearbox to frame clearance:		
Vertical	0·40-0·53 mm	0·016-0·021 in
Horizontal	0·20-0·30 mm	0·008-0·012 in
Topshaft bearing clearance	0·05-0·50 mm	0·002-0·020 in
Layshaft bearing clearance	0·05-0·10 mm	0·002-0·004 in
Pinion shaft bearing setting	−0·05 to +0·05 mm	−0·002 to +0·002 in
Auxiliary layshaft bearing clearance	0·25-1·27 mm	0·010-0·050 in
Differential bearing setting	0·00-0·05 mm	0·000-0·002 in
Spiral gear/Pinion tooth clearance	0·18-0·23 mm	0·007-0·009 in
Final Drive Unit		
Spur pinion shaft bearing preload	0·02-0·07 mm	0·001-0·003 in
Final drive shaft bearing preload	0·13-0·18 mm	0·005-0·007 in
Spur wheel clearance (14 series)	0·15-0·25 mm	0·006-0·010 in

TORQUE SETTINGS

	Nm	Kg m	lb ft
Bolts, gearbox to frame	163	16·5	120
Bolts, gearbox cover to frame	100	10·5	75
Bolts, gear lever housing to cover	12	1·3	9
Nut, pinion shaft	271	28·0	200
Nuts, gearbox casing	95	10·0	70
Bolt, topshaft rear bearing	11	1·1	8
Bolts, differential bearing caps	163	16·5	120
Bolts, differential cage	40	4·2	30
Bolts, axle case to frame	100	10·5	75
Bolts, final drives to axle case	100	10·5	75
Bolts, brake housing to final drive, (1410)	100	10·5	75
Ring nut, final drive shaft	100	10·5	75
Bolts, oil seal housing to final drive	68	7·0	50
Bolts, final drive cover	34	3·5	25
Drain plugs	80	8·4	60
Wheel nut, rear, 1410 ¾ in	203	19·5	150
Wheel nut, rear, 1210 ⅝ in	154	15·7	114
Wheel nut, rear, 1210 ¾ in	190	19·2	140

GEAR RATIOS

GEAR	LEVER POSITIONS			GEARBOX RATIO
	HIGH/LOW	SLOW/NORMAL	1, 2, 3, R	
1	LOW	SLOW	1	11·132
2	LOW	SLOW	2	6·788
3	HIGH	SLOW	1	5·581
4	LOW	NORMAL	1	4·404
5	LOW	SLOW	3	3·932
6	HIGH	SLOW	2	3·403
7	LOW	NORMAL	2	2·685
8	HIGH	NORMAL	1	2·208
9	HIGH	SLOW	3	1·971
10	LOW	NORMAL	3	1·556
11	HIGH	NORMAL	2	1·345
12	HIGH	NORMAL	3	0·7798
REVERSE				
1	LOW	SLOW	R	6·789
2	HIGH	SLOW	R	3·348
3	LOW	NORMAL	R	2·642
4	HIGH	NORMAL	R	1·325

ABBREVIATIONS

Inch		in	dimension
Millimeter		mm	dimension
Centimeter		cm	dimension
Kilogramme meter		kg m	torque
Newton meter		Nm	torque
Pound foot		lb ft	torque
Pints	Imperial	pt	volume
Gallons	Imperial	gal	volume
Litres		litre	volume
U.S. quarts		qt	volume
4-wheel drive		4WD	
Power take off		PTO	

BRAKES

DISC BRAKES

Type	Wet disc.	
Brake operation	Independent pedals for each rear wheel. Mineral hydraulic oil or rod operation of brake units.	
Brake fluid	Tellus 37 or Hyspin AWS 32	
Number of rotating discs	6 each side	
Friction area (total)	2683 cm^2	416 in^2

Rotating disc dimensions

Thickness (new)	4·9-4·75 mm	0·193-0·187 in
Variation of thickness	0·075 mm	0·003 in maximum
Variation of surface level	0·125 mm	0·005 in maximum
Radial groove depth (min)	0·125 mm	0·005 in

Stationary disc dimensions

Thickness (new)	2·7-2·6 mm	0·106-0·101 in
Variation of thickness	0·075 mm	0·003 in maximum
Variation of surface level	0·250 mm	0·008 in maximum

DRUM BRAKES

Width of drum	89 mm	3½ in
Inside diameter of new drum	216 mm	8½ in
Maximum diameter after grinding	217·52 mm	8·560 in

APPROVED LUBRICANTS

* First Recommendation † Second Recommendation

APPLICATION	AIR TEMP.	GRADE	B.P.	CASTROL	ESSO	MOBIL	SHELL	TOTAL
Transmission and Hydraulic System, with Single Pump also **Tandem Pump from Serial No. 1210/1212-11152576 1210Q/1212Q-11152617 14 Series-11200752**	Below 32°C (90°F)	* Multi-purpose 20W/30 † Multi-purpose 20W/40 † SAE80	* Tractor Oil Universal † Vanellus M 20-50 † Gear Oil 80	* Agricastrol Multi-use 20W/30 † Agricastrol MP † Agricastrol 30 † Castrol ST80 † Castrol CR30	* Esso Tractorlube Universal 20W/30 † Esso Unifarm † Essolube HD30	* Mobiloil Special 20W/40 † Mobilube C80 † Mobiloil 20W/50 † Delvac Oil 1230	* Rotella SX Oil 20W/40 † Dentax 80	* Total HD2-M 20W/40 † Total HD1-B 30
	Above 32°C (90°F)	* Multi-purpose 20W/30 † Multi-purpose 20W/40 † SAE90	* Tractor Oil Universal † Vanellus M 20-50 † Gear Oil 90	* Agricastrol Multi-use 20W/30 † Agricastrol MP † Agricastrol Gear Oil Light † Castrol ST90	* Esso Tractorlube Universal 20W/30 † Esso Unifarm † Esso Gear Oil ST90/140	* Mobiloil Special 20W/40 † Mobilube C90	* Rotella SX Oil 20W/40 † Dentax 90	* Total HD2-M 20W/40 † Total Transmission 90
Transmission and Hydraulic System with Tandem Pump to Serial No. 1210/1212-11152576 1210Q/1212Q-11152617 14 Series-11200752	All temperatures	Special Hydraulic Oil	* Tractran 9	* Agricastrol MD	* Esso Torque Fluid 56	* Mobil Fluid 423	* Donax TD	* Total Equivis JD
Final Drive Reductions, 12 series Tractors	Below −7°C (20°F)	* SAE90	* Gear Oil 90	* Castrol ST90 † Agricastrol Gear Oil Light	* Esso Gear Oil ST90/140	* Mobilube C90	* Dentax 90	* Total Transmission 90
	Above −7°C (20°F)	* SAE140	* Gear Oil 140	* Castrol D † Agricastrol Gear Oil Medium	* Esso Gear Oil ST90/140	* Mobilube C140	* Dentax 140	* Total Transmission 140
Final Drive/Brake Housing, 14 series Tractors	All temperatures	* Special Disc Brake Oil		* Agricastrol MP	* Esso Unifarm	* Mobiland Super Universal Tractor Oil	* Shell Universal Farm Oil or † Donax TT	* Super Universal Tractor Oil
Grease fittings	All temperatures		* Energrease Universal † Energrease L2	* LM Grease	* Beacon 2	* Mobilgrease Super † Mobilgrease MP	* Retinax A † Farmgrease Universal	* Total Multis

Printed in U.S.A.

CASE CORPORATION
700 STATE STREET
RACINE, WI 53404 U.S.A.

CASE CANADA CORPORATION
3350 SOUTH SERVICE ROAD
BURLINGTON, ON L7N 3M6 CANADA

770/1412 Tractors
Book 2

Service Manual

9-37009

CASE IH

TABLE OF CONTENTS
770 THRU 1412 MODEL TRACTORS
(Under 90 HP Tractors)

DESCRIPTION	FORM NUMBER
SCHEDULE OF REPAIR TIMES	
Job Pricing Manual - 885 Thru 1412 Tractor	9-79875
Schedule of Repair Times - 780, 880, 990 & 1200 Tractors	9-38112
DIESEL ENGINE - 3 CYLINDER	
3-Cylinder Diesel Engines (770, 780, 880 and 885)	9-37101
GASOLINE ENGINE - 3 CYLINDER	
3-Cylinder Gasoline Engines (885, 3800 and 4600)	9-37111
DIESEL ENGINE - 4 CYLINDER	
4-Cylinder Diesel Engines - Series 449001 and 455001 (990, 995, 1200, 1210, 1410 and 1412)	9-37121
4-Cylinder Diesel Engine - Series AD4/47 (990 SN482001 thru 505286)	9-38114
Model 3LD Turbocharger	9-45941
Servicing the Model H1 Turbocharger	8-21340
Turbocharger Failure Analysis	9-78235
CLUTCHES	
Clutch	9-37131
TRANSMISSION	
Non-Synchromesh - Selectamatic Tractors (770, 780, 880, 990, 3800 and 4600)	9-38115
Synchromesh Gearbox (885, 990, 995 and 996)	9-37142
Non-Synchromesh 1200 and Synchromesh 1210	9-37151
Hydra-Shift Tractors	9-37161
Synchromesh Transmission 1210 and 1410 Tractors	9-37155
FRONT AXLE (4WD TRACTOR)	
Front Axle - 4WD Tractor MK1 (1200 and 1210)	9-37171
Front Axle - 4WD Tractor MK2 (1210)	9-37172
Front Axle - 4WD Tractor MK3 (Carraro)	9-37175
Front Axle - 4WD Tractor MK4 (Case)	9-37185
FRONT AXLE (2WD TRACTORS) AND STEERING	
Orbitrol (Danfoss) Steering Unit	9-78725
Front Axle and Steering	9-37191
Front Axle and Steering	9-37194
HYDRAULIC SYSTEM	
Selectamatic Hydrulic System	9-37211
Front Mounted Pump (1200, 1210, 1212, 1410 and 1412)	9-37241
Rear Mounted Pump (885, 990, 995 and 996)	9-37214
ELECTRICAL SYSTEM	
Electrical Equipment	9-37222
MISCELLANEOUS	
Service Information (1410, 1412 Tractors)	9-38124
POWER TAKE-OFF	
Power Take-Off (1410, 1412 Tractors)	9-37181

CASE CORPORATION

Rac 9-79989

Printed in U.S.A.
Revised August, 1980

Front Axle
(4 WD Tractor)

FRONT AXLE - KRAMER

4 W.D. Tractor

CASE CORPORATION

Pub 9-37171
(TP 619 C6)

Printed in U.S.A.
November, 1972 (Reprinted April, 1979)

CONTENTS PAGE

INTRODUCTION 1

TRANSFER BOX

- Removal 3
- Dismantling 3
- Re-assembly 5

DIFFERENTIAL

- Removal 9
- Dismantling 0
- Bevel pinion setting 11
- Re-assembly 13

FINAL DRIVE

- Dismantling 15
- Re-assembly 17

AXLE STEADY BEARINGS

- Removal 17
- Re-assembly 19
- Swivel pin adjustments 19

DRIVESHAT AND PINION BEARINGS Series II

- Removal 21
- Re-assembly 23

DRIVESHAFT AND PINION BEARINGS Series I

- Removal 25
- Re-assembly 27

SERVICE TOOLS 28

MAINTENANCE 31

SERVICE NOTES 32

INTRODUCTION

This publication should be used in conjunction with the standard tractor service manual. It deals with the aspects of driving and routine servicing which are affected by the fitting of the front wheel drive unit.

The drive to the front wheels is taken from a splined extension at the front of the pinion shaft of the gearbox to the transfer box bolted under the rear main frame. This drives a cardan shaft through a dog clutch which allows disengagement of the front wheel drive for road work.

The cardan shaft drives a conventional bevel differential at its forward end through a spiral bevel pinion and crown wheel. Final reductions are contained in the front hubs, thus keeping torque loadings on the remainder of the transmission to a minimum.

The full range of 12 forward and 4 reverse speeds are available with 2 or 4-wheel drive engaged.

Hydrostatic power steering is fitted as standard equipment on 4-wheel drive tractors to ensure effortless, fatigue-free handling. The use of smaller wheels at the front allows good manoeuvrability.

A choice of 2-wheel or 4-wheel drive is available by means of the lever on the left-hand side of the tractor. In the lower notch 4-wheel drive is engaged and in the upper notch rear wheel drive only is available.

Engagement or disengagement of 4-wheel drive should be made whilst the tractor is stationary or under free wheel or light load conditions. Do not try to engage when the rear wheels are slipping.

SERIAL NUMBERS

In any service or parts dealings concerning the 4-wheel drive units, the serial number of the transfer box, front axle and tractor chassis should be quoted.

The number for the transfer box is stamped on the left-hand side close to the engagement/disengagement lever, e.g. 022214.

The number for the front axle is stamped in the centre of the front hub, e.g. 022653.

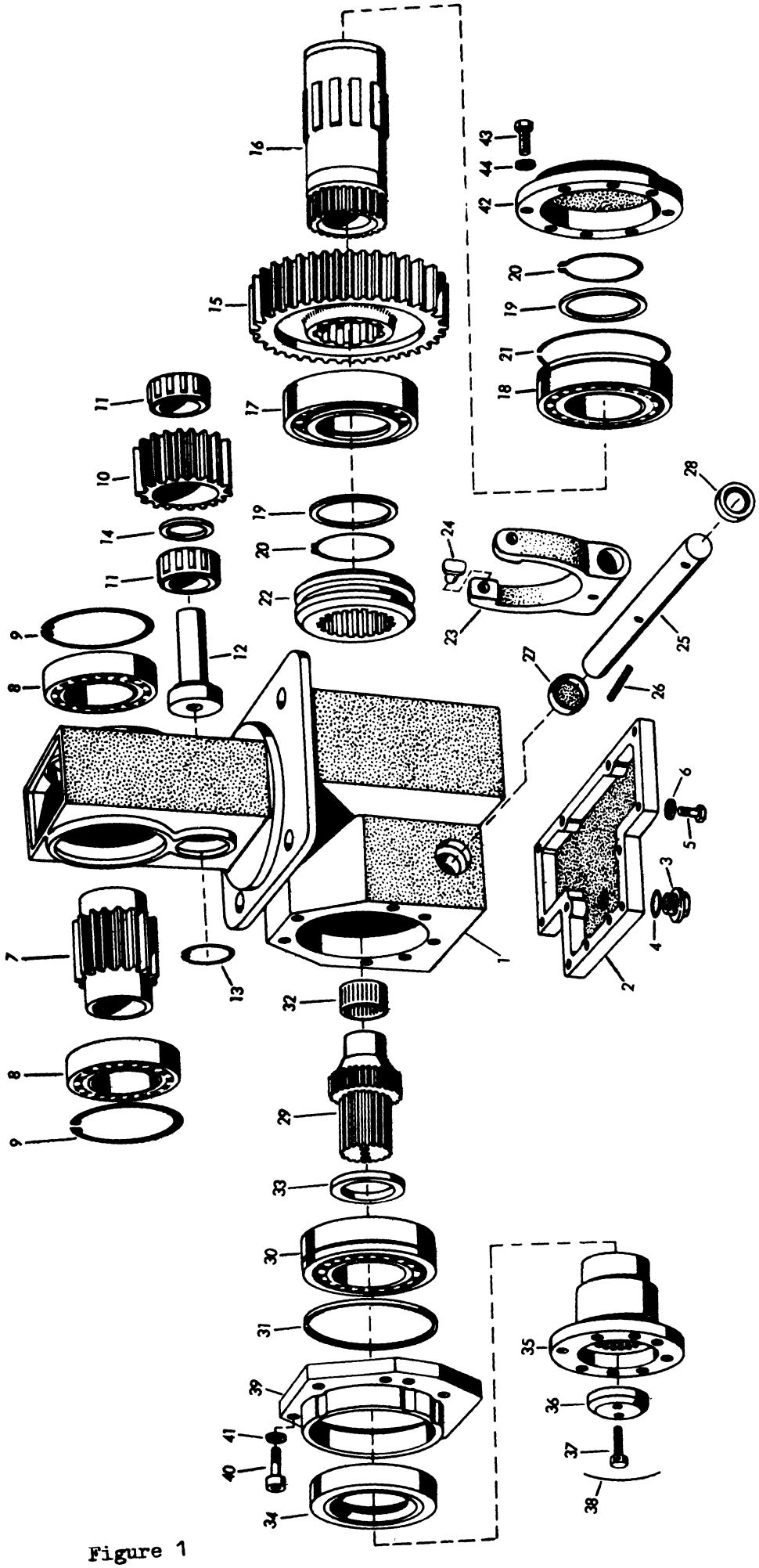
1
2
3
4
5
6
7
8
9
10
11
12
13
14
15
16
17
18
19
20
21
22
23
24
25
26
27
28
29
30
31
32
33
34
35
36
37
38
39
40
41
42
43
44

Figure 1

REMOVING THE TRANSFER BOX

1200 and 1210 Tractors

1. Drain the transmission oil
2. Remove the gearbox top
3. Remove the muff coupling bolt
4. Slide the muff coupling (Part No. 1-02410-0026 1200 tractors 1-02410-0126 1210 tractors) completely onto the gearbox pinion shaft.
5. Disconnect driveshaft (transfere box to front axle) at transfer box.
6. Remove the transfer box securing bolts and then lower the transfer box from the main frame.

DISMANTLING TRANSFER BOX - FIGURE 1

Note: No gaskets are used on Kramer units. The following compounds are used for sealing purposes:-

a) Terosan spline sealing and jointing compound (spline seal)
b) Terolan 2105 rubber jointing compound(joint seal)

Operations

1. Remove lower cover (2)
2. Clean magnetic filter (3) in drain plug
3. Position the transfer box with the drive flange upwards on the bench
4. Remove drive flange retaining plate (36)
5. Remove drive flange (35) from drive shaft using two legged puller (see page 31 for special tools)
6. Remove cap screws (40) holding oil seal housing to transfer box
7. Bolt the driveshaft withdrawal plate (see page 31 for special tools) to the end of driveshaft (29) (This secures the driveshaft (29) to the oil seal housing (39)).
8. Remove oil seal housing (39) complete with circlip (31) bearing (30) washer (33) and driveshaft (29) by jacking the oil seal housing, etc., from the transfer box case using the two jacking bolts (M10 x 60) which should be positioned in the threaded holes in the oil seal housing.

   This method of removal ensures that the bearing is withdrawn with the shaft. If the oil seal housing is withdrawn on its own the bearing will be left in the casing and will be more difficult to remove. The same procedure should be used when it is only necessary to replace the flange oil seal (34).

9. Remove needle roller bearings (32) from the driven shaft (16)
10. Drive selector fork spring pin (26) through the selector fork into a hole in the transfer box casing.
11. Remove the selector shaft (25) out through the oil seal (28) in the side of the transfer box casing, support the selector fork when doing so.
12. Remove the selector fork (23) complete with shoes (24)
13. Remove the sliding coupling (22)
14. Remove the spring pin (26) from the hole in casing

Note: Front bearing has a circlip
Centre bearing has no circlip } same dimensions
Rear bearing has a circlip

15. Remove circlip (20) support ring (19) from the inner end of driven shaft (16)
16. Remove selector shaft oil seal (28) if damaged
17. Remove split flange from inner race of bearing (17)

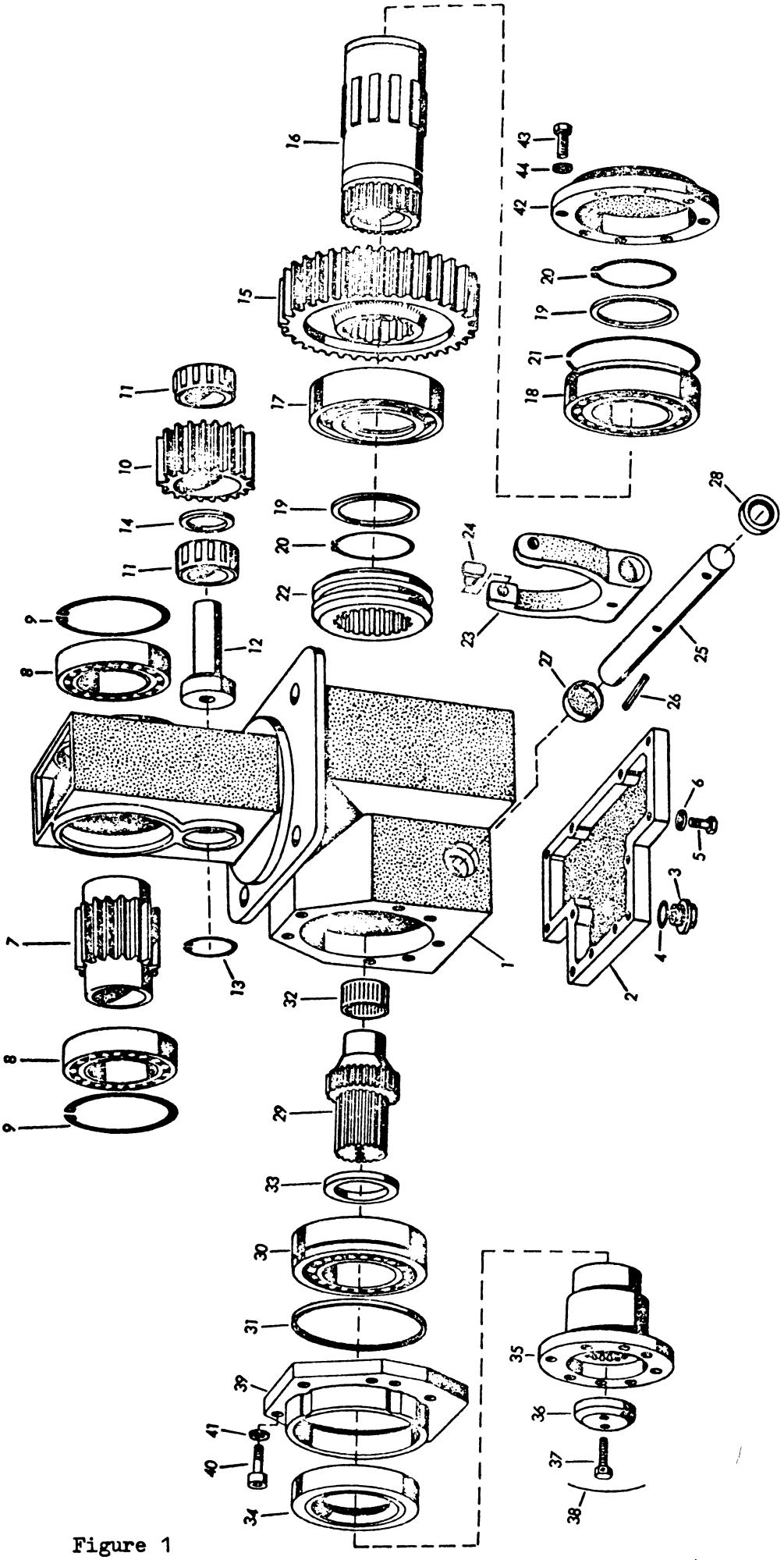
16
43
44
42
15
20
19
21
18
11
17
10
19
14
20
24
11
22
28
9
12
23
25
8
27
26
6
5
3
7
4
13
1
2
32
8
29
9
33
30
31
35
39
36
41
37
40
38
34

Figure 1

18. Place the assembly on its side and remove cover plate (42)
19. Position the transfer box with the front (drive flange end) upwards

Note: The pinion shaft is longer on 1210 tractors and therefore the muff coupling is shorter.

20. Support the bottom of the casting and then press out the driven shaft (16)
21. Remove circlip (20) support ring (19) circlip (21) and bearing (18) from the rear end of the driven shaft (16) if required.
22. Turn the transfer box over and fit inner race of bearing (17) back into position to get sufficient clearance to remove gear (15) downwards.
23. Remove bearing (17) from the housing.
24. Remove intermediate shaft circlip (13)
25. Turn the transfer box over, support the casting and then press out the intermediate shaft (12)

Note: The intermediate gear is now loose inside the transfer box but cannot be removed yet.

26. Remove the two large circlips (9) from pinion shaft (7)
27. Press out the pinion shaft (7)
    One bearing (8) will remain in the housing but can now be removed. It is important not to mix the bearings (8) and their inner races. The inner races can be removed from the shaft using a small drift between the pinion teeth.
28. Turn the assembly upside down and remove the intermediate gear (10) bearings (11) and washer (14)
29. Clean all parts in diesel or paraffin etc.
30. Replace any worn or damaged parts

ASSEMBLING THE TRANSFER BOX

1. Refit the inner race of rear bearing (18) to the driven shaft (16) bearing race should be tight to splines. Fit bearing (18) on the inner race with the circlip (21) to the outside.
2. Refit inner race split flange, support ring (19) and circlip (20) to the driven shaft (16)
3. Place the housing rear upwards
4. Insert large gear (15) and support it with 2 x $\frac{3}{4}$in bars
5. Press in driven shaft (16) complete with bearing, support ring and circlip
6. Turn the assembly over (front upwards)
7. Support the end of the driven shaft (16) and then press on inner race of centre bearing (17) (Flange towards gear)
8. Fit centre bearing (17) onto inner race
9. Refit inner race split flange, support ring (19) and circlip (20)

Note: Check gear and shaft spin freely

10. Refit the cover plate (42) using rubber jointing compound (no gaskets)

REPLACING SELECTOR ASSEMBLY

11. Replace selector shaft oil seal (28) using a jointing compound (not rubber)
12. Replace cup seal (27) if it has been removed
13. Refit sliding coupling (22) flange down onto driven shaft (16)
14. Replace selector fork shoes (24) to selector fork (23). Grease will hold them in place.
15. Replace selector fork (23) on sliding coupling
16. Refit selector shaft (25) aligning the holes in the shaft and selector fork

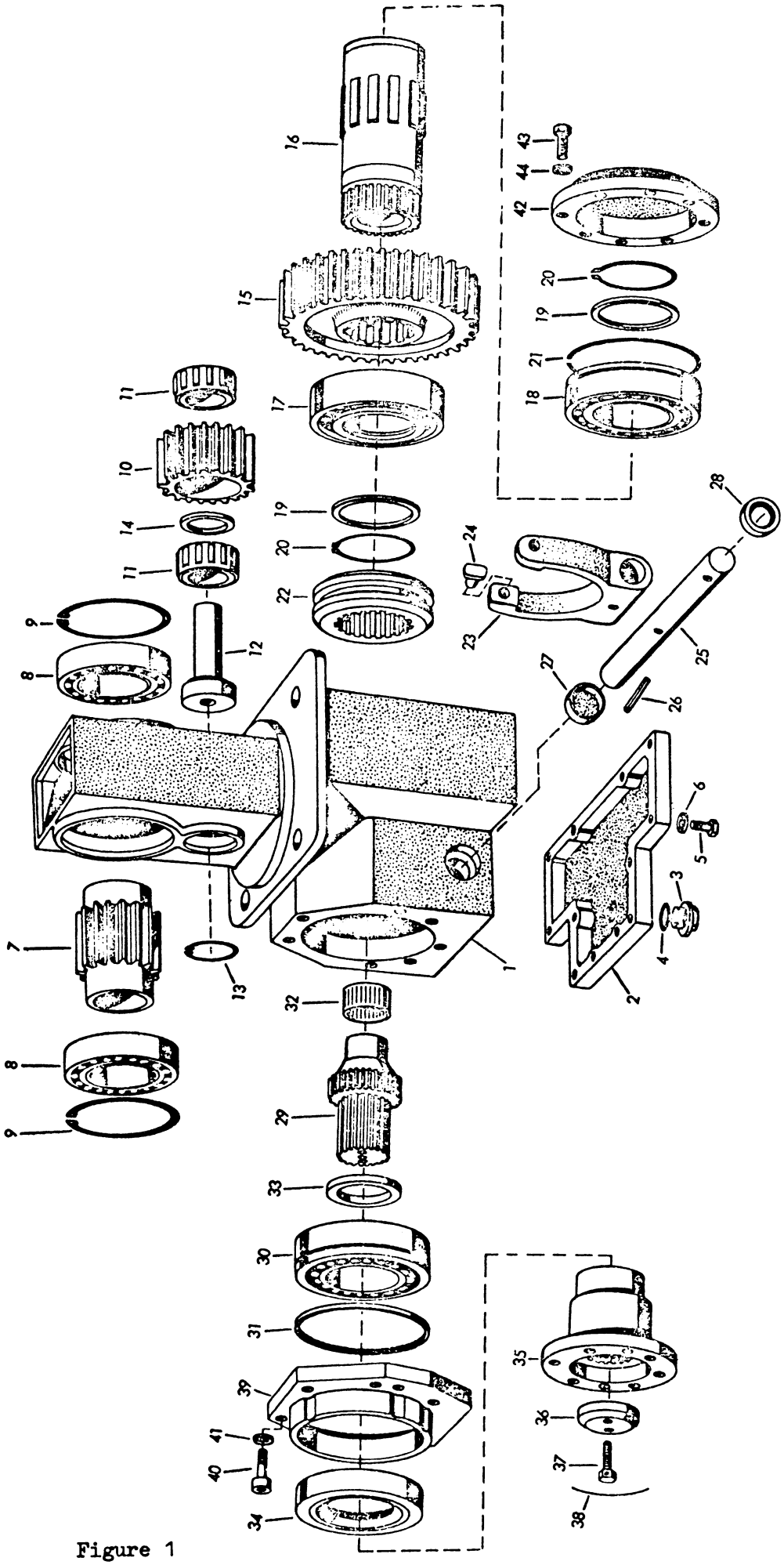
1
2
3
4
5
6
7
8
9
10
11
12
13
14
15
16
17
18
19
20
21
22
23
24
25
26
27
28
29
30
31
32
33
34
35
36
37
38
39
40
41
42
43
44

Figure 1

17. Replace spring pin (26)
18. Check operation of selector

REPLACING FRONT DRIVE FLANGE

19. Fit a new seal (34) into housing - using jointing compound (seal to be flush with outer edge of housing)
20. Refit oil seal housing (39) complete with seal onto the flange (35)
21. Refit bearing (30) onto flange (35) with the circlip (31) in the recess in the oil seal housing.
22. Replace washer (33) onto driveshaft (29)
23. Refit driveshaft (29) into flange (35) using jointing compound (not rubber) sparingly under retainer plate (36) - compound will run down splines.

Note: Allow 10 minutes for the compound to set.

24. Refit plate (36) and retaining bolts (37) torque 80 lbs ft (11 Kgm) The flange holding tool shown on page 30. can be used for this operation
25. Refit locking wire (38)
26. Clean off excess jointing compound from the gear teeth
27. Replace the needle bearing (32) into the recess in the driven shaft (16)
28. Replace the flange assembly into the transfer housing using a rubber jointing compound
29. Ensure drive shaft (29) is located in the bearing (32) before cap screws (40) are used to pull together the oil seal housing (39) and transfer box housing (1). Tap the end of driveshaft (29) occasionally to make assembly easier.
30. Torque the cap screws (40) to 34 lbs ft (4.7 Kgm)

REPLACEMENT OF INTERGEAR

31. Place the assembly on its side (drive flange upwards)
32. With the intermediate gear opposite the top bearing bore replace one bearing (11) followed by washer (14) and second bearing (11) into the intermediate gear.

Note: Washer (14) to be held in place by grease

33. Lubricate shaft (12) and drive into housing
34. Replace circlip (13)
35. Check tooth engagement and freedom of spin.

REPLACEMENT OF PINION SHAFT ASSEMBLY

36. Replace inner races of bearings (8) on the pinion shaft (7) with shoulders to gear.
37. Fit the outer race of one bearing (8) halfway into the housing.
38. Position the pinion shaft onto the intermediate gear (spline to rear) and tap the bearing fully home.
39. Fit second circlip (9)
40. Check the pinion shaft has a slight end float by tapping backward and forwards.
41. Check that all gears are free to rotate.
42. Check that selector operates correctly.
43. Check that the magnet and plug (3) are clean and then fit into the lower cover (2)
44. Replace lower cover (2) using a rubber jointing compound on both faces.

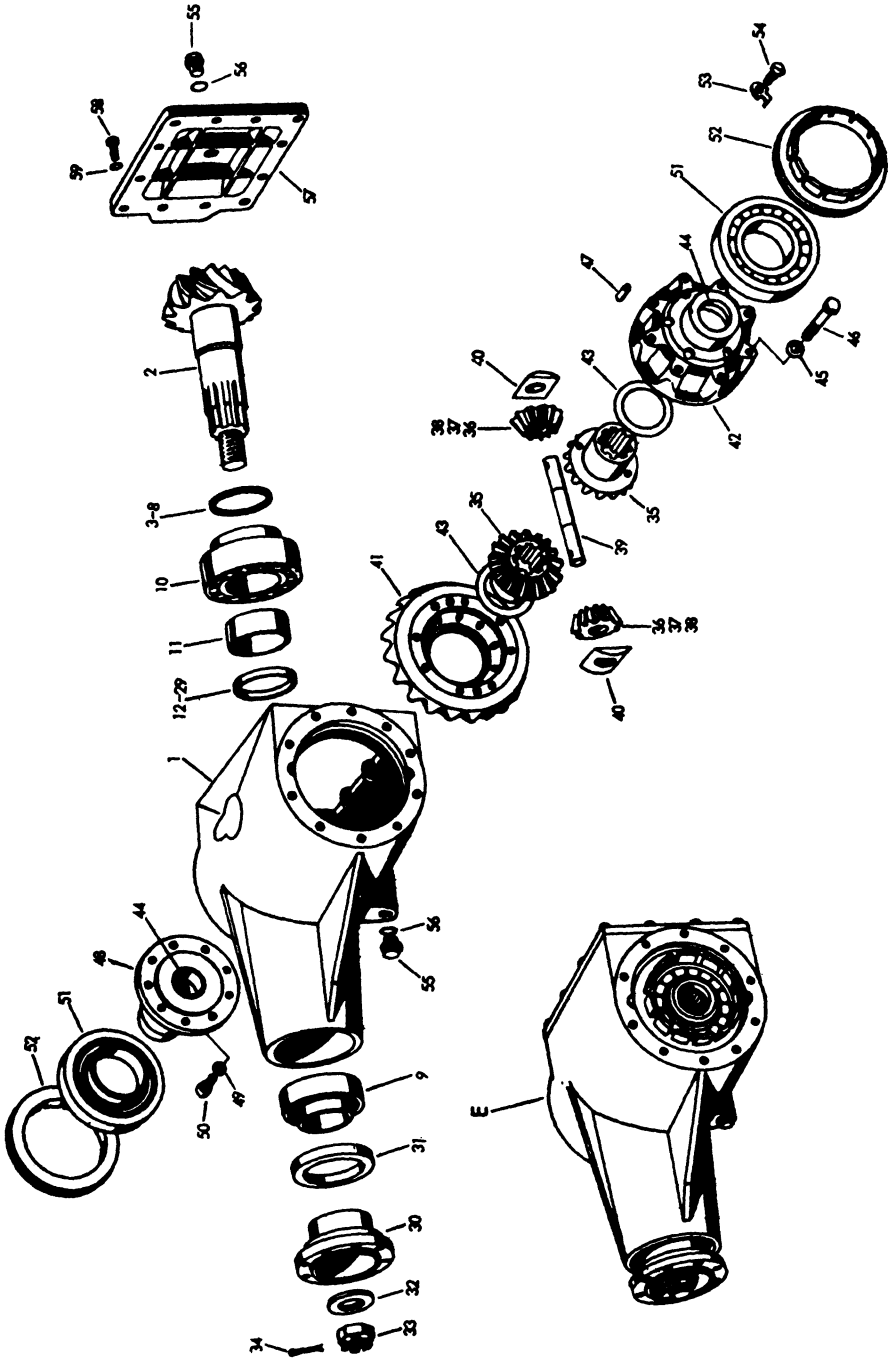

Figure 2

REMOVAL AND DISMANTLING OF DIFFERENTIAL - FIGURE 2

1. Apply the hand brake
2. Jack up the front axle
3. Remove right-hand front wheel
4. Remove prop shaft (transfer box to front axle)
5. Remove track rod (right-hand end)
6. Drain differential oil
7. Remove short axle case complete with final drive assembly (right-hand)
8. Remove differential assembly from large axle case (left-hand)

TO REMOVE SPIRAL GEAR (CROWN WHEEL)

9. Remove front cover (57) after removing 12 bolts (58)
10. Loosen all spiral gear retaining screws (50) and bolts (46) approx. $1\frac{1}{2}$ turns
11. Loosen the bevel pinion shaft nut (33) after removing the split pin (34) This nut is torqued to 400 ft lbs (60 Kgm)

Note: Use a 1 13/16 AF (46mm) spanner and the special drive flange holding tool as shown on page 30.

12. Remove differential bearing adjuster wheel lock plates (53)
13. Remove differential bearing adjuster wheels (52) - mark left or right-hand side
14. Remove the bearing (51) facing the spiral gear (crown wheel 41) - Tap out progressively by turning the differential and using a drift on the inner race. The outer race should be a loose sliding fit in the differential housing.
15. Turn the assembly over until the side which contains the remaining bearing rests on the bench.
16. Drift the differential assembly down until the crown wheel locating bolts (46) come against the casing.
17. Remove allen screws (50) which hold the sleeve (48) to the spiral gear (41)
18. Lift out sleeve (48)
19. Remove thrust washer (43)
20. Tap the outer race of the remaining differential bearing (51) as far out as possible.
21. The differential assembly may now be removed (across corners)
22. Remove bolts (46)
23. Tap spiral gear off the register and locating dowels (47)

24. Remove differential wheel (35) followed by differential pin (39) two differential pinions (36) thrust plates (40) remaining differential wheel (35) and thrust washer (43)
25. Remove the remaining differential carrier bearing inner race (51) if necessary.

Note: Differential pinions have replaceable bushes (38)
Differential cage also has a replaceable bush (44)
Sleeve (48) has a replaceable bush (44)

BEVEL PINION REMOVAL

26. Remove the bevel pinion nut (33) 1 13/16 AF (46mm) spanner
27. Remove washer (32) and driver flange (30)

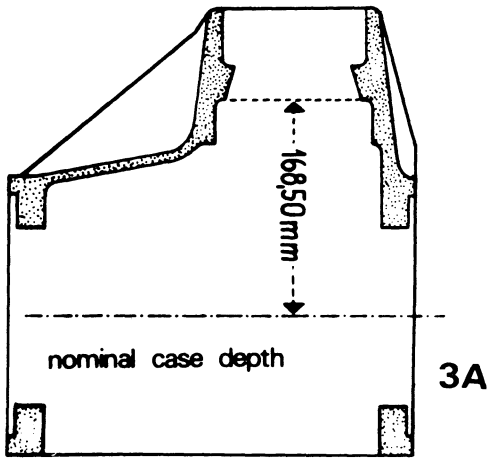
16850mm
nominal case depth
3A

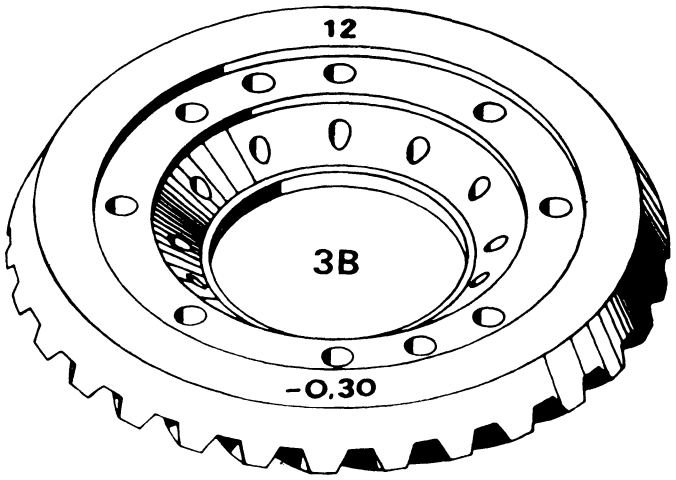
12
3B
-0,30

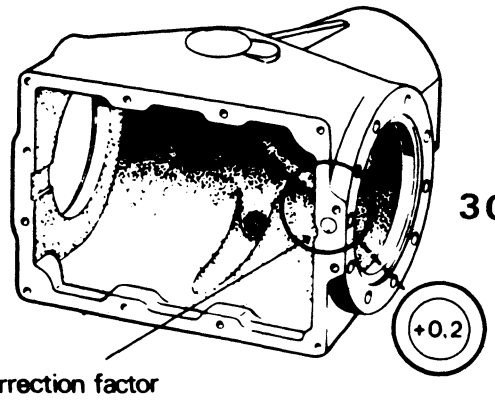
3C
+0.2
correction factor

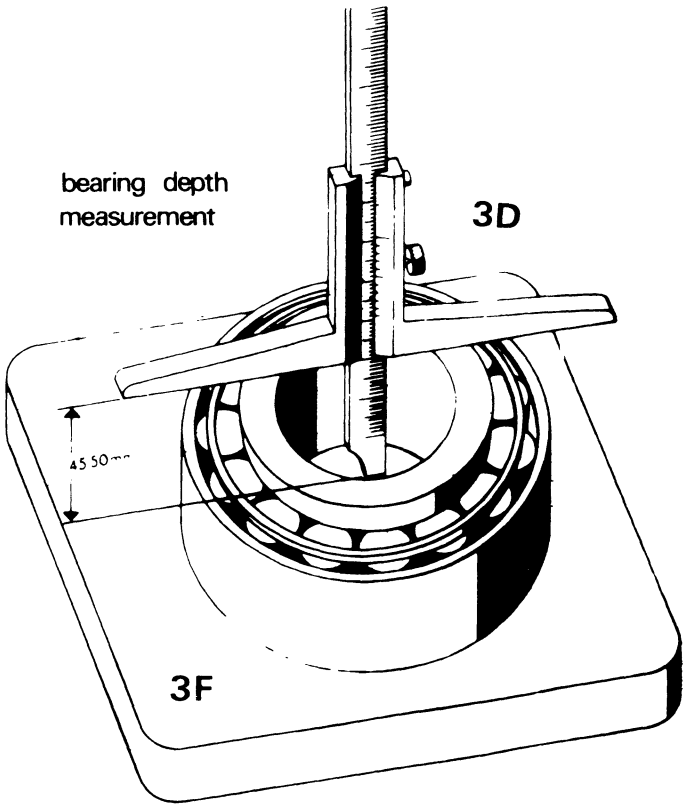
bearing depth
measurement
3D
45,50mm
3F

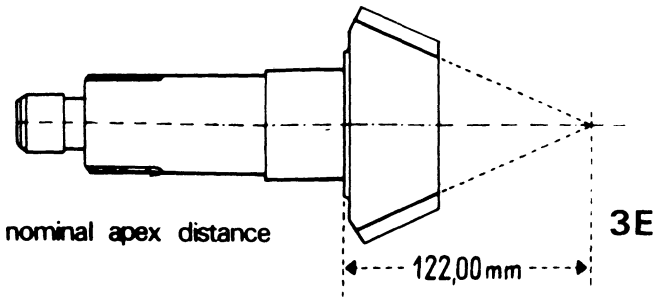
nominal apex distance
122,00 mm
3E

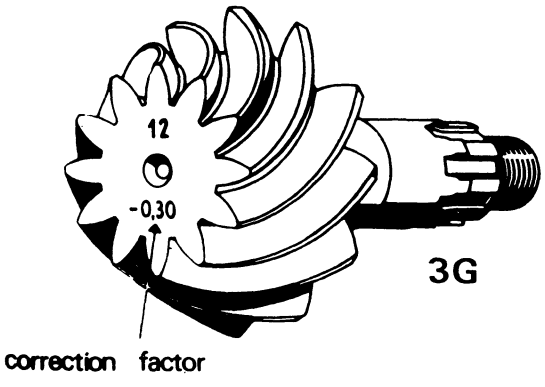
12
-0,30
3G
correction factor

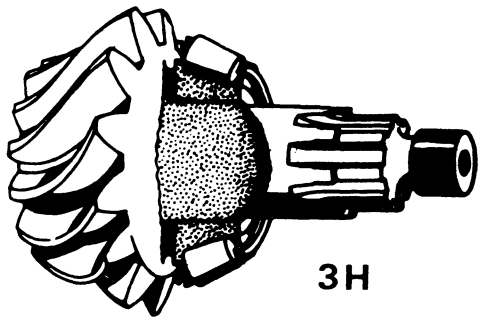
3H

Figure 3A - H

29. Tap the bevel pinion (2) down complete with large bearing inner race (10) sleeve (11) and distance piece (12-29)

Note: This will leave small bearings (9) oil seals (31) and large bearing outer race (10) in the housing.

30. Remove oil seal (31)
31. Remove inner race of bearing (9)
32. Remove remaining outer tracks from the casing if necessary.

BEVEL PINION SETTING - FIGURE 3

Example 1
Apex Distance

To obtain correct meshing between the bevel pinion and spiral gear the pinion shaft apex distance must be correct. Due to production tolerances the actual apex distance is affected by variations in the machining of the differential housing and of the bevel pinion.

Correction factors which take account of these variations are etched or stamped on the front face of the differential housing and on the end of the bevel pinion shaft.

Below is an example to show how these correction factors are used to obtain the correct thickness of shims to fit behind the head of the bevel pinion shaft to ensure correct meshing of the spiral gear (crown wheel) Refer to Figure 3 when reading this example.

Bevel Pnnion Shaft

Nominal apex distance 'E' (Figure 3)	122.00mm
Correction factor (marked on pinion shaft) 'G' (Figure 3)	-0.30mm
Actual apex distance	121.70mm
Add bearing (10) depth(measured) 'F' (Figure 3)	45.50mm
Distance 'A'	167.20mm

Differential Housing

Nominal case depth 'A' (Figure 3)	168.50mm
Correction factor (marked on differential housing) 'C' (Figure 3)	+0.20mm
Actual case depth	168.70mm
Subtract distance 'A' (see above)	167.20mm
Shims required between bevel pinion (2) and bearing (10)	1.50mm

PINION SHAFT ENDFLOAT

Example 2

Pinion shaft end float is adjusted by special spacers (12-29) which are of different thicknesses.

The thickness of spaces required to give correct end float (no pre-load) depends on the actual dimensions of the bearings and of the differential housing. Various measurements can be taken of these components (see figure 4) and the actual spacer thickness required calculated as shown below in the following example.

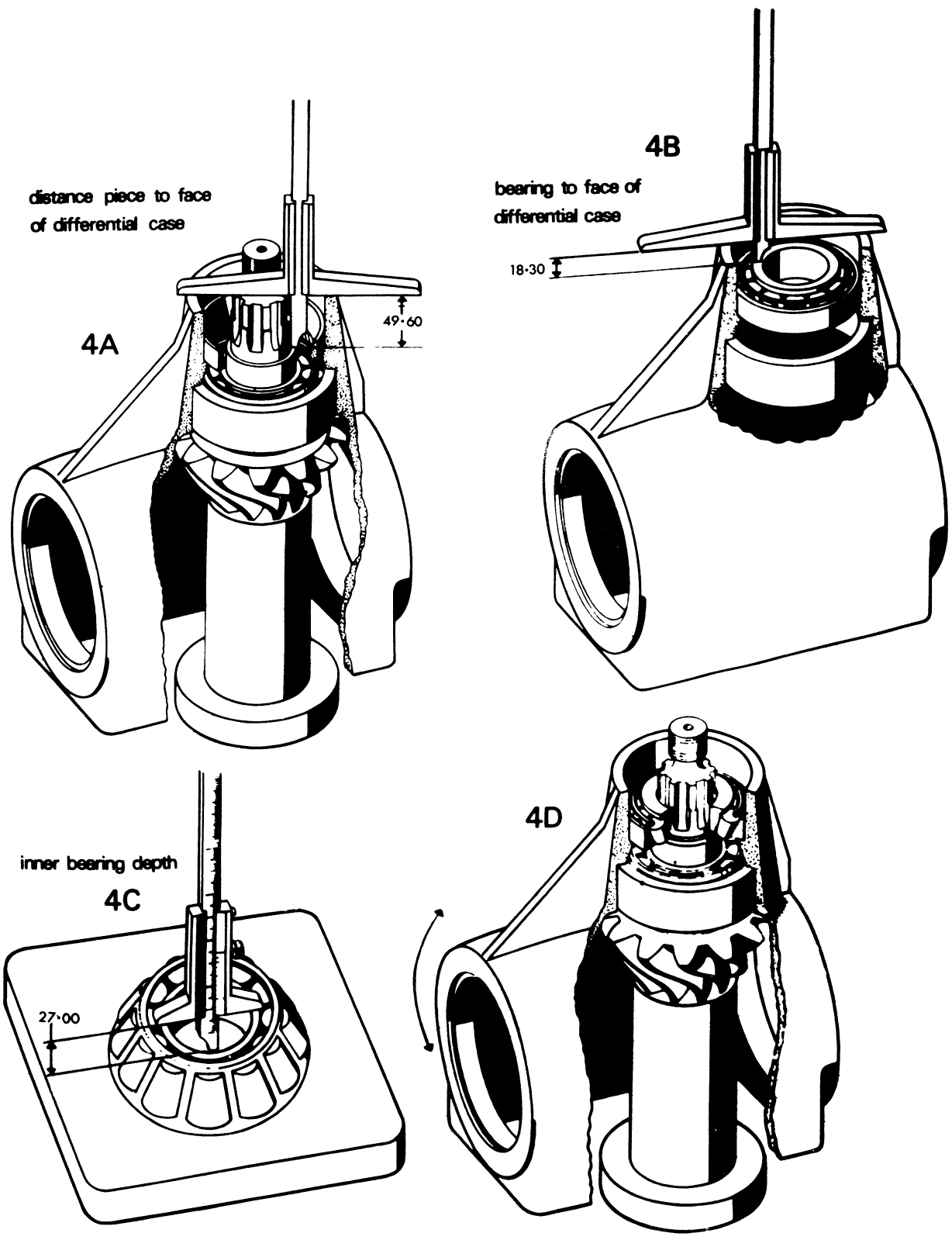
distance piece to face
of differential case
49·60
4A
4B
bearing to face of
differential case
18·30
inner bearing depth
4C
27·00
4D

Figure 4A-D

Measured distance from differential housing face to sleeve (11) (distance 'A' Figure 4)	49.60mm
Subtract distance from differential housing face to small bearing face (9) when assembled (distance 'B' Figure 4)	18.30mm
	31.30mm
Subtract width of small bearing inner race (9) (measured distance 'C'Figure 4)	-27.00mm
Width of special distance piece (12-29) to give no end float and no pre-load.	4.30mm

REASSEMBLY AND ADJUSTMENT OF BEVEL PINONN

1. Measure depth of bearing (10) - see figure 3.

Note: Differential housing and bevel pinion correction factors and calculate the thickness of shims required (figure 3)

2. Fit required number of shims (3/8) onto bevel pinion (2) as calculated (figure 3)

3. Fit inner roller race (10) onto top of the shims
4. Refit bevel pinion shaft (2) shims (3/8) and roller race (10) to casing (1)
5. Refit sleeve (11) chamfer down.
6. Support pinion shaft until differential casing does not rest on bench and measure 'A' (figure 4)
7. Remove pinion shaft from housing and fit inner race of bearing (9) measure 'B' (figure 4)
8. Remove inner race of bearing (9) and measure 'C' (figure 4) with bearing on a flat plate.
9. Calculate thickness of shims as in example 2 above.
10. Refit bevel pinion shaft complete with shims, bearing and sleeve into casing.
11. Support pinion shaft as in D (figure 4) and fit correct thickness of shims.

REBUILDING DIFFERENTIAL

1. Fit new bush (44) in differential cage if necessary
2. Refit inner race of bearing (51) to differential case if removed
3. Fit differential wheel (35) and thrust washer (43) into cage. Check for tight spots or too much float.
4. Fit new bushes (38) to differential pinions (36) if necessary.
5. Refit the differential pinions (36) pin (39) and thrust washers (40) (Check for bolt location)
6. Refit second differential wheel (35) and thrust washer (43)
7. Replace spiral gear (41) onto dowels (47) in cage (42) (either way)

Note: Ensure spiral gear is square on the register

8. Fit bolts (46)
9. Fit two spare bolts into spiral gear (crown wheel) - teeth side. The bolts should be opposite each other and protrude 1¼ to 2 inches. Hold these bolts in a vice to hold assembly rigid while tightening bolts (46). Torque bolts to 100ft lbs and (14kgm) and wire up.

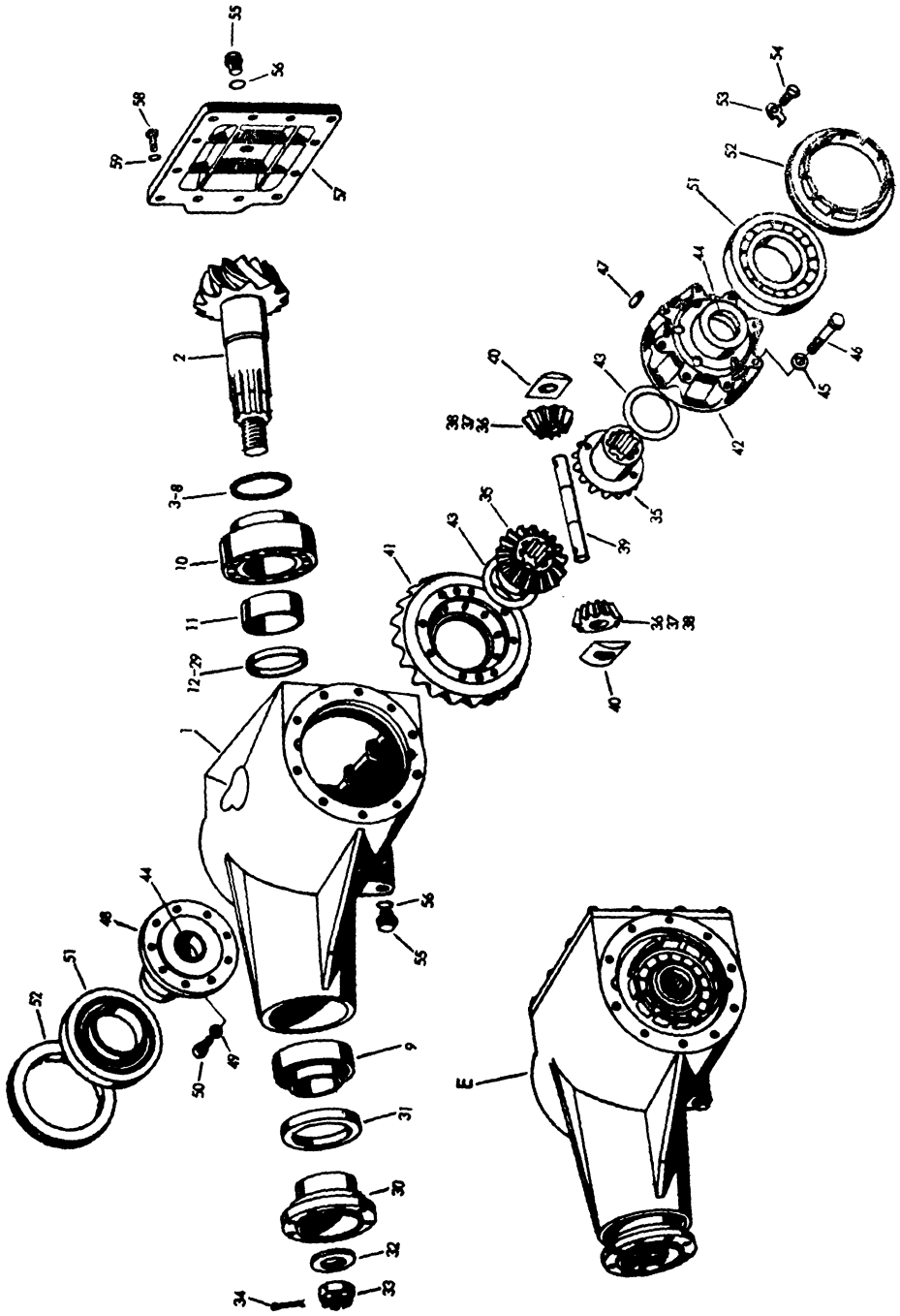

Figure 2

10. Position the differential in the casing
11. Replace sleeve (48) and bolt to spiral gear using cap screws (50) and washers (49) torque to 50 lb ft. (7 kgm)
12. Replace differential bearing inner race (sleeve end)
13. Replace differential bearing (51) - below thread depth
14. Replace differential adjuster wheel (52) (sleeve end) - screw the adjuster flush with casing face.
15. Turn the assembly over and replace the second bearing (51)
16. Screw in the adjuster wheel (52) - one behind spiral gear to give no backlash.

Note: Spiral gear and bevel pinion are completely in mesh

17. Screw in the adjuster wheel (52) - sleeve end until 0.005 to 0.007 inch backlash is obtainable. When this amount of backlash has been achieved the correct pre-load will have been put on the differential bearings.
18. Refit locking plates (53) to adjuster wheels
19. Replace front cover (57)
20. Fill with correct grade of oil

FINAL DRIVE ASSEMBLY

There are two types of final drive assemblies Series I and II. The general layout of series I and II are similar. The main differenee being the carrier housing which is a single casting on series II axle (3) Figure 5 but consists of two components on a series I axle (4) and (5) Figure 8. Only a small number of series one axles are fitted, all of which were on initial production 1200 tractors.

Dismantling on both axles is identical except for the removal of drive-shaft and pinion bearings.

REMOVAL AND REPLACEMENT OF FINAL DRIVE OIL SEAL (23) - Figure 5

1. Drain oil from final drive assembly
2. Remove capscrews (29) from carrier housing (3) and cover housing (22) - locked in pairs with wire.
3. Using six jacking screws 8mm, jack the cover housing (22) complete with final driveshaft (18) and perhaps inner bearing (28) **off**
4. Remove jacking bolts and inner bearing (28) if it has come away with the final driveshaft.
5. Check thread protrusion through locknut (27) on final driveshaft (18) - note for assembly.
6. Remove final driveshaft locknut (27) and tabwasher (26) - wheel studs (20) will require locking to prevent the shaft turning when removing the locknut (27)

6A. **Count number of threads protruding.**

7. Pull off reduction drum (21) using a special adapter, see page 30. if no adapter is available drop on the end of the shaft.
8. Remove circlips (25) if bearing (24) requires replacing.
9. Using 10mm jacking bolts jack the final driveshaft (18) from the cover housing (22)
10. Remove jacking bolts

Note: Wheel studs (20) are replaceable (knock-out - knock-in)

11. Remove final driveshaft bearing (24) and seal (23)

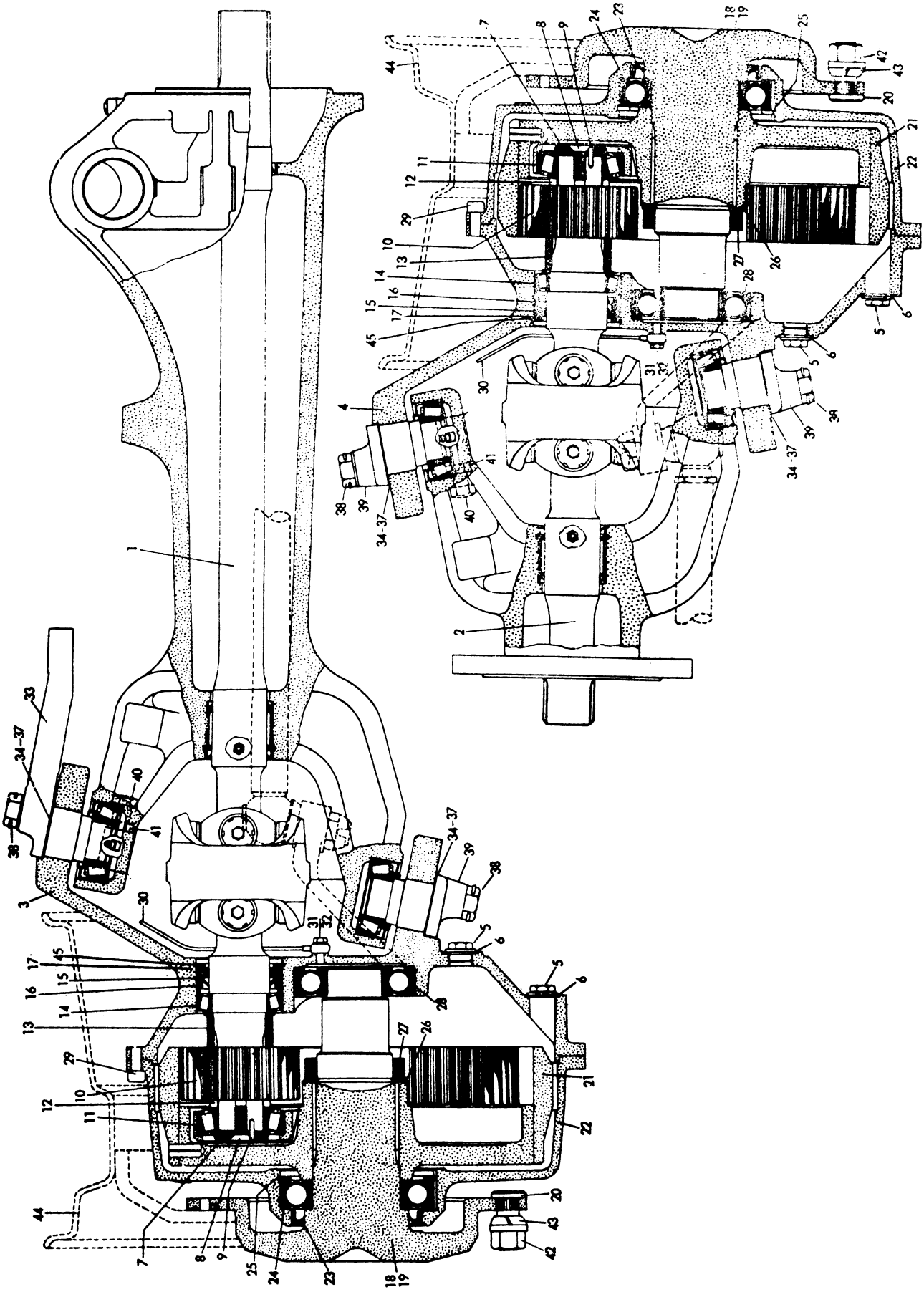

Series II Axle
Figure 5

Note: The seal is fitted as an oil seal not a dirt seal. A sealant should be used on the outside edge of the seal.

REASSEMBLY OF THE FINAL DRIVE

1. Replace bearing (24) and circlip (25) in housing (22)
2. Treat the seal (23) with sealant and refit up to the bearing (24)
3. Lubricate the seal lip and its location on the final drive shaft (18)
4. Place final driveshaft on its end and lower the cover housing (22) complete with bearing (24) circlip (25) and oil seal (23) onto the bearing location on the final driveshaft.
5. Position reduction drum (21) onto splines using the special adapter page 23 for lifting
6. Press or drift the reduction gear drum (21) onto the final drive-shaft (18) until the locknut threads appear.

Note: Tighten the locknut down until the correct number of threads protrude through the locknut (counted when dismantled) approximate check 5 threads.

7. Refit the tabwasher (26) and locknut (27)
8. Replace inner final drive bearing (28) onto shaft after checking the bearing.
9. Replace the final drive and reduction drum assembly to the carrier housing (3)

Note: Small boss on cover housing (22) must be fitted to the top, thus ensuring the oil drain for the final driveshaft outer bearing housing is at the bottom of the assembly.

10. The assembly will require driving on until cap screws (29) can be fitted.
11. Refit cap screws (29) which secure cover housing (22) to carrier housing (3)
12. Continue tapping the assembly as the cap screws are tightened.
13. Wire up the capscrews in pairs.

TO REPLACE DRIVESHAFT STEADY BEARING AND
OIL SEALS LOCATED IN THE AXLE CASE - FIGURE 6

1. Remove bolts (38) from the swivel pin (39) and steering lever (33) - top and bottom. Right-hand reduction has two swivel pins.
2. Using special jacking screws 10mm, remove the steering lever (33) swivel pin (39) and shims.

Note: Shims must be kept with their own swivel pin. Do not mix the top and bottom swivel pins on the right-hand reduction, the left-hand reduction swivel pins are also different.

3. Remove the final drive reduction assembly complete with driveshaft.
4. Using the universal puller (page 29) remove outer oil seal (52)
5. Remove circlip (51)
6. Using the universal puller (page 29) remove needle bearing (50)

Note: Position of open end of needle bearing (innermost)

7. Using the universal puller (page 29) remove inner seal fitted as a dirt excluder (49) to allow excessive grease into the axle case.

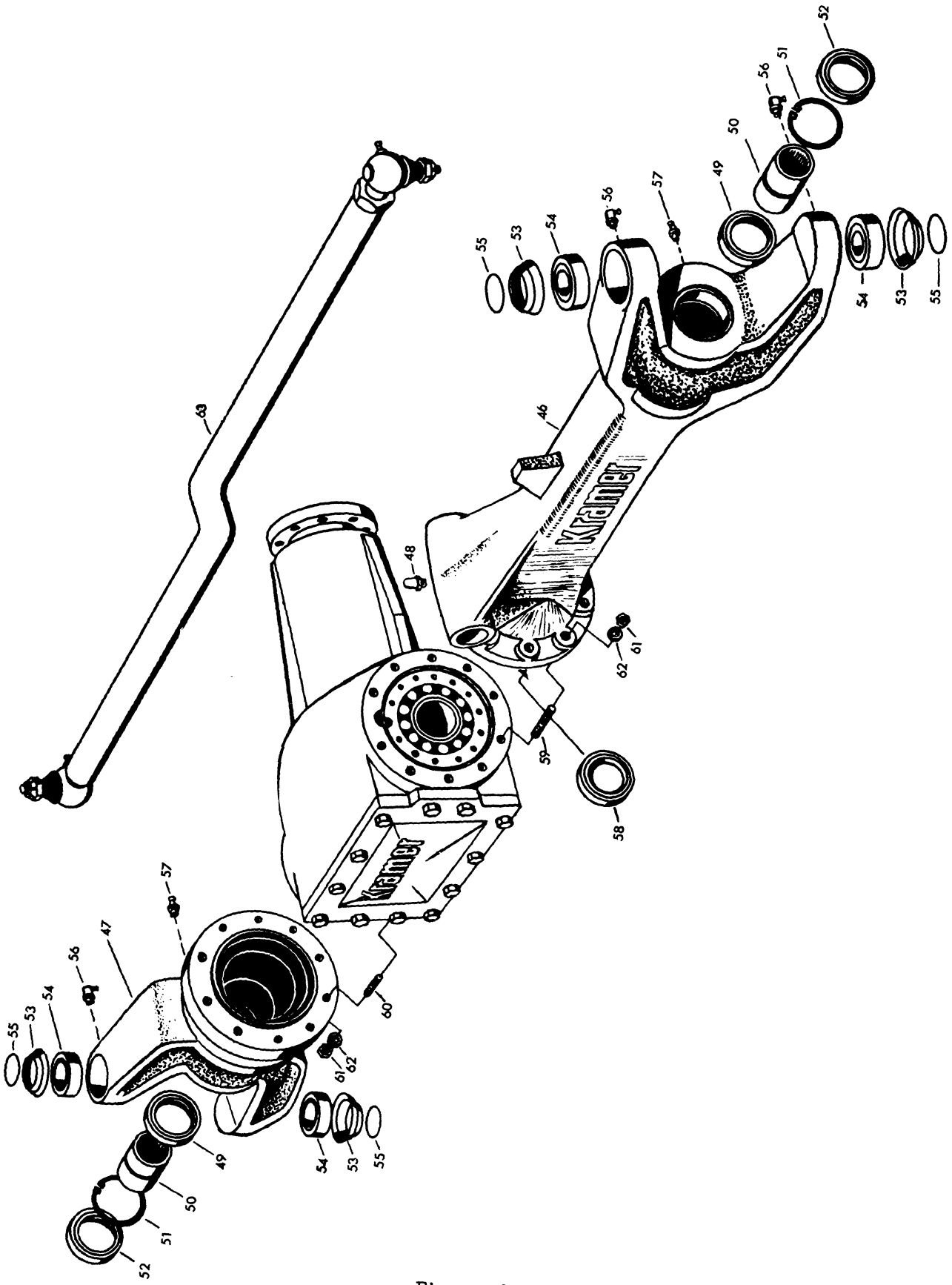

Figure 6

ASSEMBLY PROCEDURE

1. Fit a new seal (49) as a dirt excluder to the bottom of the recess after first lubricating the bore.
2. Fit the needle bearing (50) up to the seal - open end to seal.
3. Refit circlip (51)
4. Refit outer seal (52) as an oil seal to keep the lubricant in the bearing.
5. Refit reduction assembly to the axle case.

Note: Replace swivel pins from where they were removed complete with their own shims.

6. If swivel pin taper bearings (54) are to be replaced, greaser seals, (53) complete with 'O' rings (55) will also require replacing.

SWIVEL PIN ADJUSTMENTS

If any of the following parts are to be replaced, axle case (46/47), steering lever (33), swivel pins (39), swivel bearings (54), and carrier housing (3), settings will be upset and will need to be recalculated.

Note: If new axle casings (46/47) are required then they should be fitted with new bearings (54) greaser seals (53) and 'O' rings (55)

Jacking bolts (page 29) are required for replacing swivel bearings.

TOP SWIVEL PIN ADJUSTMENT - FIGURE 7

1. Fit the outer race of the top bearing (54) to axle
2. Place inner bearing race on the outer race
3. Measure the distance from the top face of the inner race to the top face of the axle - figure 7a (4.5 - 5.0mm Nominally 4.6mm in example
4. Fit grease seal (53) and 'O' ring (55)
5. Measure top swivel pin or steering lever shoulder depth - figure 7B (Nominally 36.5mm) - 36.5 in example

CALCULATION - FIGURE 7

Centre line of the axle to the top face of the axle fork - nominal 144.00mm (figure 7c)
Centre line of the carrier housing to the top face of the carrier housing - nominal 175.00mm (figure 7D)
Note: Carrier housing carries a dimension on the top face.
Axle fork top face also carries a dimension
These are correction factors, indicating how much individual parts vary from the nominal dimension.

	AXLE FORK	CARRIER HOUSING
Centre line to top face - nominal distance	144.00mm	175.00mm
Correction factor	+0.10mm	-0.20mm
Centre line to top face - actual distance	144.10mm	174.80mm

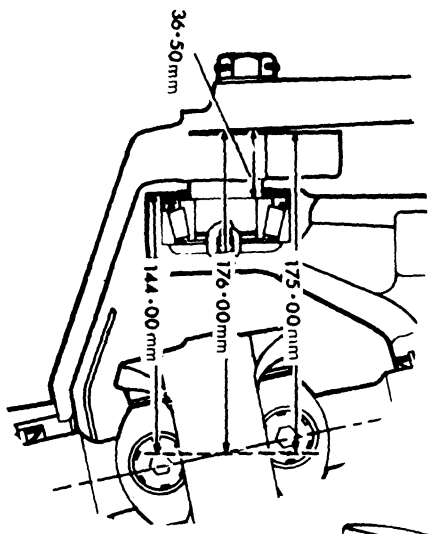

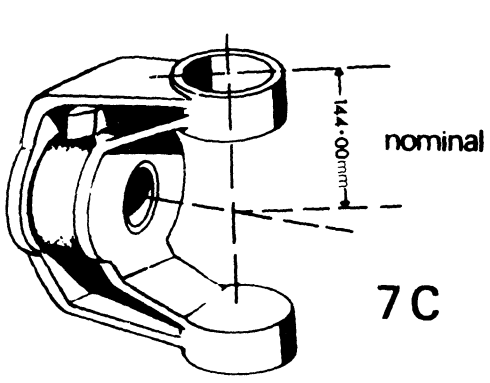

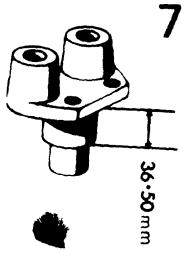

upper swivel pin
shoulder depth

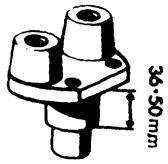

lower swivel pin
shoulder depth

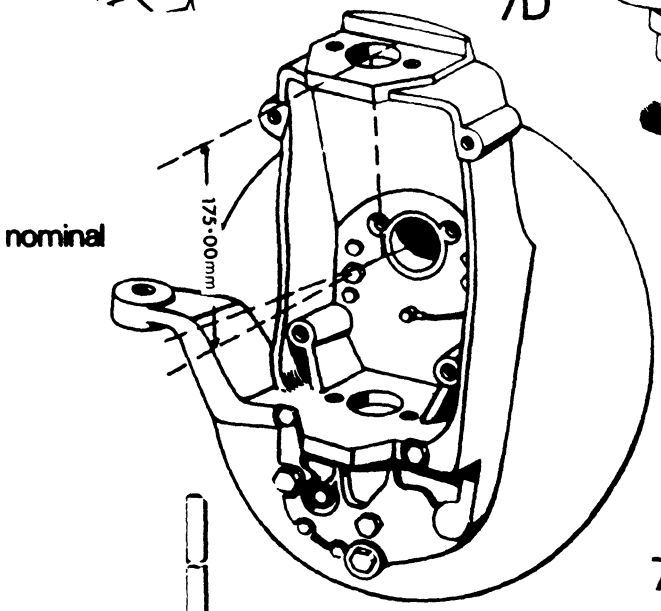

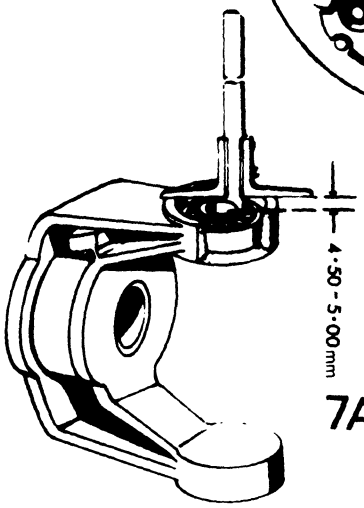

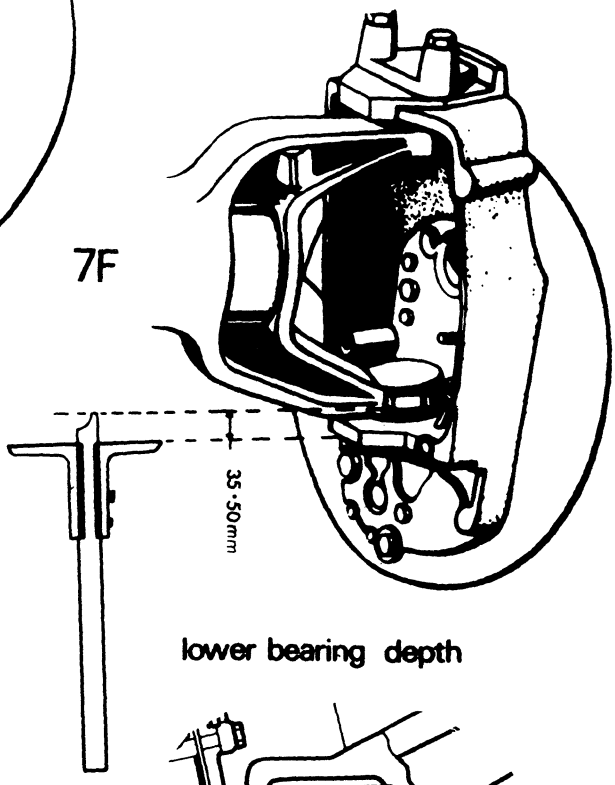

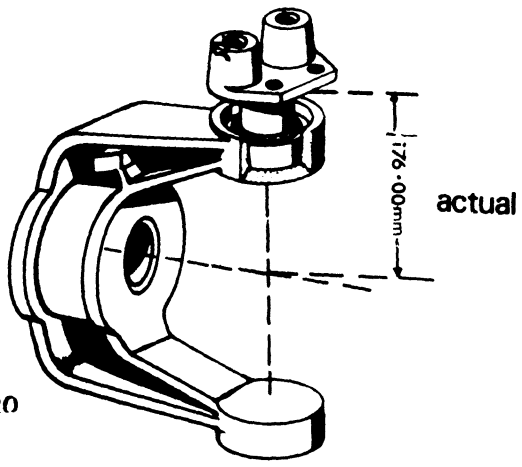

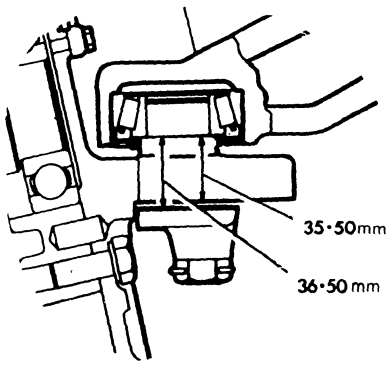

lower swivel pin

Figures 7A–7F

	AXLE FORK	CARRIER HOUSING
Subtract upper bearing depth	4.60mm - figure 7a	
	139.50mm	
Add swivel pin shoulder depth	36.50mm - figure 7b	
	176.00mm	
Subtract the actual distance from the centre line to the top face of the carrier housing	174.80mm	
	1.20mm	

Therefore 1.20mm thickness of shims (34-37) are required at the top swivel pin to centralise the reduction housing with the axle.

BOTTOM SWIVEL PIN - FIGURE 7

1. Fit the outer race of the bottom taper bearing (54) to the axle
2. Fit the inner race and grease seal (53) complete with 'O' ring (55)
3. Assemble the final drive assembly to the axle fork with the correct shims (34-37) at the top swivel pin.
4. Measure the lower swivel pin shoulder depth - figure 7e (nominally) 36.5mm) - 36.5 in example
5. Measure the distance from the carrier housing face to the face of the bottom bearing inner race (lower bearing depth) - figure 7f (nominally) 35.5mm:- 35.5 in example
6. Subtract the lower bearing depth - figure 7f from swivel pin shoulder depth - figure 7c.

Swivel pin shoulder depth	36.50mm
Lower bearing depth	-35.50mm
Clearance	1.00mm

7. The bearings should have 0.2mm pre-load, therefore subtract 0.2mm from the above figure.

Clearance	1.00mm
Pre-load	0.20mm
Shims required	0.80mm

8. Therefore 0.80mm thickness of shims (34-37) are required at the bottom swivel pin (39) to give the correct bearing pre-load.
9. Assemble the bottom swivel pin with the correct shims.

REMOVAL OF DRIVESHAFT AND PINION BEARINGS - Figure 5
SERIES II AXLE

1. Remove cap screws (36)
2. Remove carrier housing (29) complete with final driveshaft assembly using 8mm jacking screws.

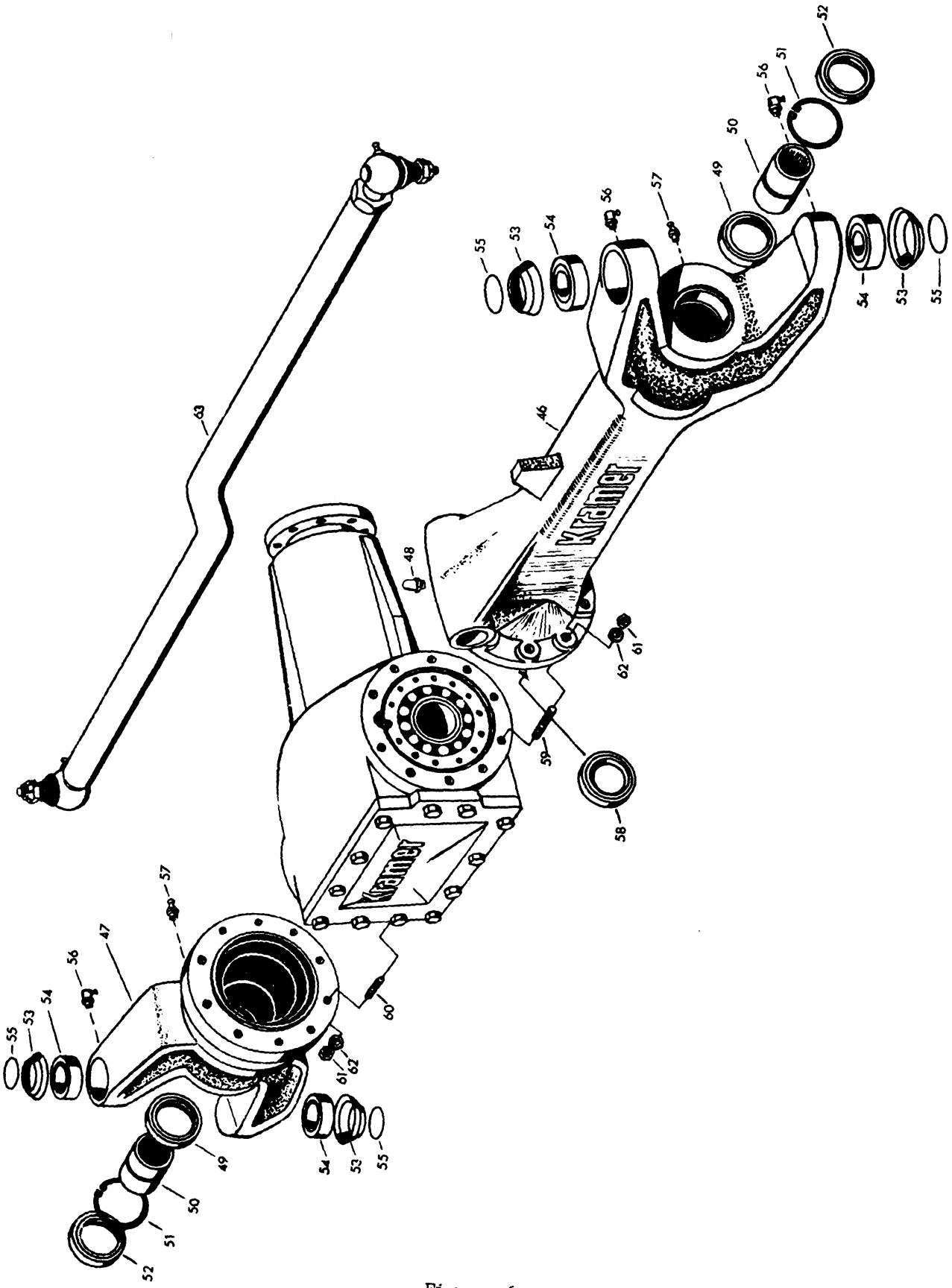

Figure 6

3. Remove steering lever (33) or top swivel pin (39) - right-hand side
4. Remove bottom swivel pin (39)

Note: Do not mix swivel pins and shims

5. Remove carrier housing assembly complete with driveshaft from the axle.
6. Examine grease seals (53) and bearings (9)
7. Remove countersunk screw (8) from the end of the driveshaft assembly (1/2)

Note: The countersunk screw (8) is locked in position by punching the end of it with a centre punch. The punch mark will require removing by drilling.On reassembly a new thrust washer (7) and screw (8) will be required because the originals will be damaged while drilling.

8. Remove thrust washer (7) which is held in position by a spring dowel (9)
9. Remove spring dowel

Note: Thrust washer is only located on the inner bearing face.

10. Fit spare bolt in the end of the driveshaft assembly (1/2) - for jacking and drifting on.
11. The pinion gear (10) should be able to be turned but not fall out when the driveshaft is removed providing the pre-load of 0.20mm is correct.
12. Drift out the driveshaft (1/2)

Note: If driveshaft only requires replacing and pinion preload is correct no further dismantling is necessary. Additional shims can be added after removing circlip (45) on series II axles. For complete dismantling proceed as follows.

13. The pinion shaft (10) and distance piece (13) are now loose and can be removed.
14. Remove circlip (45)
15. Remove shims (17) distance piece((15) complete oil seal (16)
16. Remove taper bearing (14)

TO REASSEMBLE OF DRIVESHAFT AND PINION BEARINGS (Series II axle) Figure 5

1. Position carrier assembly with the driveshaft bore vertical. Final driveshaft side downhill.
2. Fit the outer race of bearing (11) into the carrier housing and then lay the inner race on top of it.
3. Place small distance piece (12) on top of inner race
4. Place pinion (10) on top of small distance piece
5. Place large distance piece (13) on top of pinion
6. Place inner race of bearing (14) on top of large distance piece (13)
7. Centralise bearings and pinion with special mandrel, see page 30.
8. Fit outer race over mandrel and drive fully home.
9. Fit distance piece (15) complete with oil seal (16) and shims to give 0.2mm preload.
10. Fit circlip (45) This will require tapping into position.
11. Withdraw mandrel

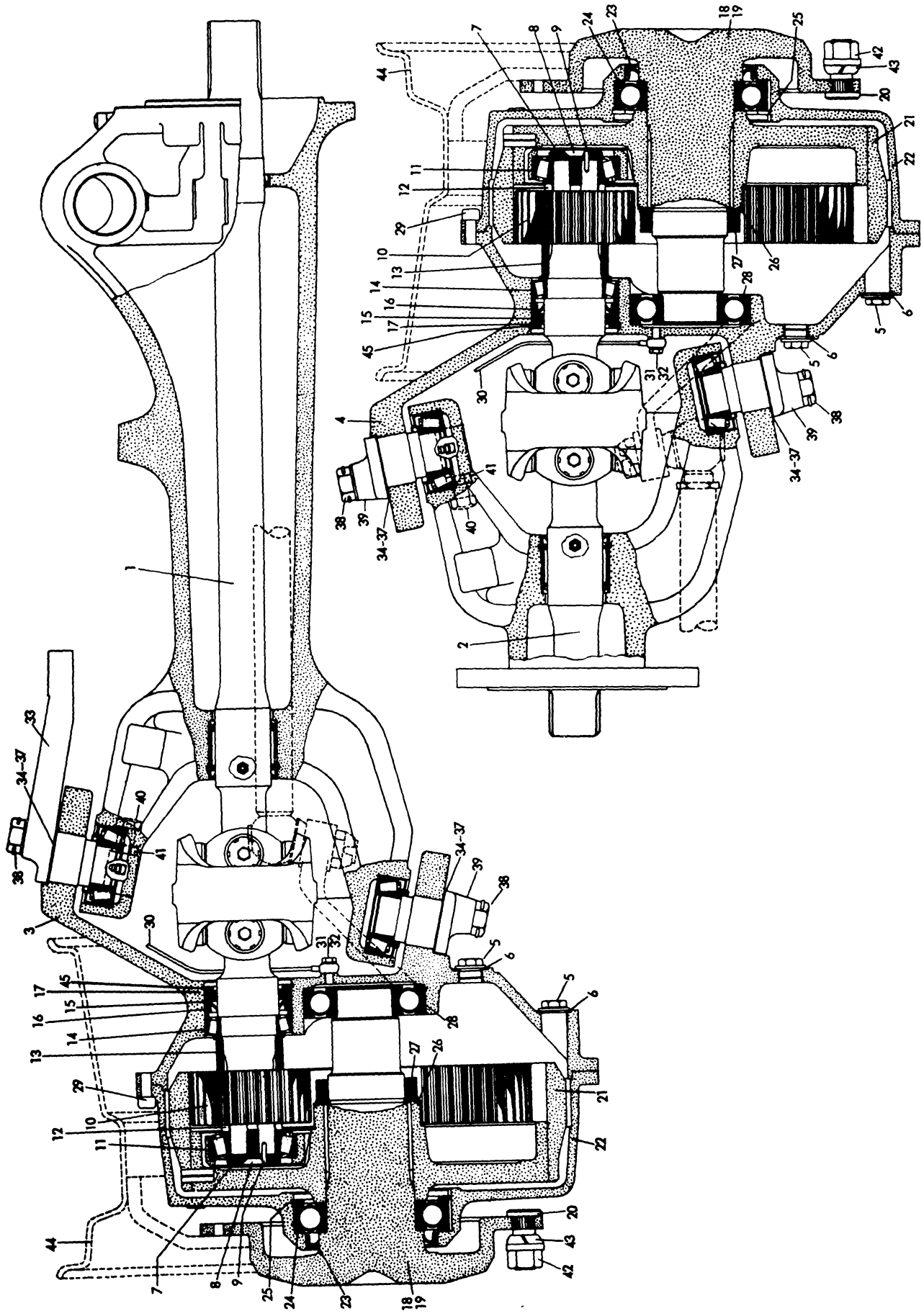

Series II Axle
Figure 5

Note: If pinion moves out of position more shims will be required.

12. Replace Driveshaft (1/2)
13. Pull into position using the driveshaft puller and 10mm bolt. see page 22.
14. Replace tension pin, thrust washer and new countersunk screw.

REMOVAL OF PINION BEARINGS (Series I) Figure 8

1. Remove the reduction and final drive assembly - previously outlined.
2. Remove the countersunk screw (15) from the end of the driveshaft assembly (1/2)

Note: The countersunk screw (15) is locked in position by punching the end of it with a centre punch. The punch mark will require removing by drilling. On reassembly a new thrust washer (14) and screw (15) will be required because the originals will be damaged while drilling.

3. Remove thrust washer (14) which is held in position by a spring dowel (16)
4. Remove spring dowel (16)

Note: Thrust washer is only located on the inner bearing face

5. Fit a spare bolt in the end of the driveshaft assembly (1/2) - for jacking and drifting on.
6. Drift out the driveshaft (1/2)
7. If the driveshaft only requires replacing and the pinion preload is correct no further dismantling is necessary. For complete strip down proceed as follows. Pinion preload 0.20mm
8. Remove retaining bolts (7) and (12) bolts (12) are countersunk
9. Remove level plug (13)
10. Remove drain plug (51)
11. Remove drain pipe locating bolt (53)
12. Drive taper wedge between the carrrier plate (5) and axle support (4)
13. Remove shims (24)

Note: Additional shims can be added at this stage and then assembled

14. Tap the pinion gear (17) out of location, support whilst taking out the centre bearing (18) inner race (21) small distance piece (19) and large distance piece (20)

Note: Position of distance pieces - large one to pinion gear (17)

15. Remove oil seal housing (22) complete with oil seal (23) by drifting out.
16. Remove outer bearing tracks.

Note: These bearings are not interchangeable. The narrow bearing with the largest quantity of rollers fits at the pinion gear (17) end.

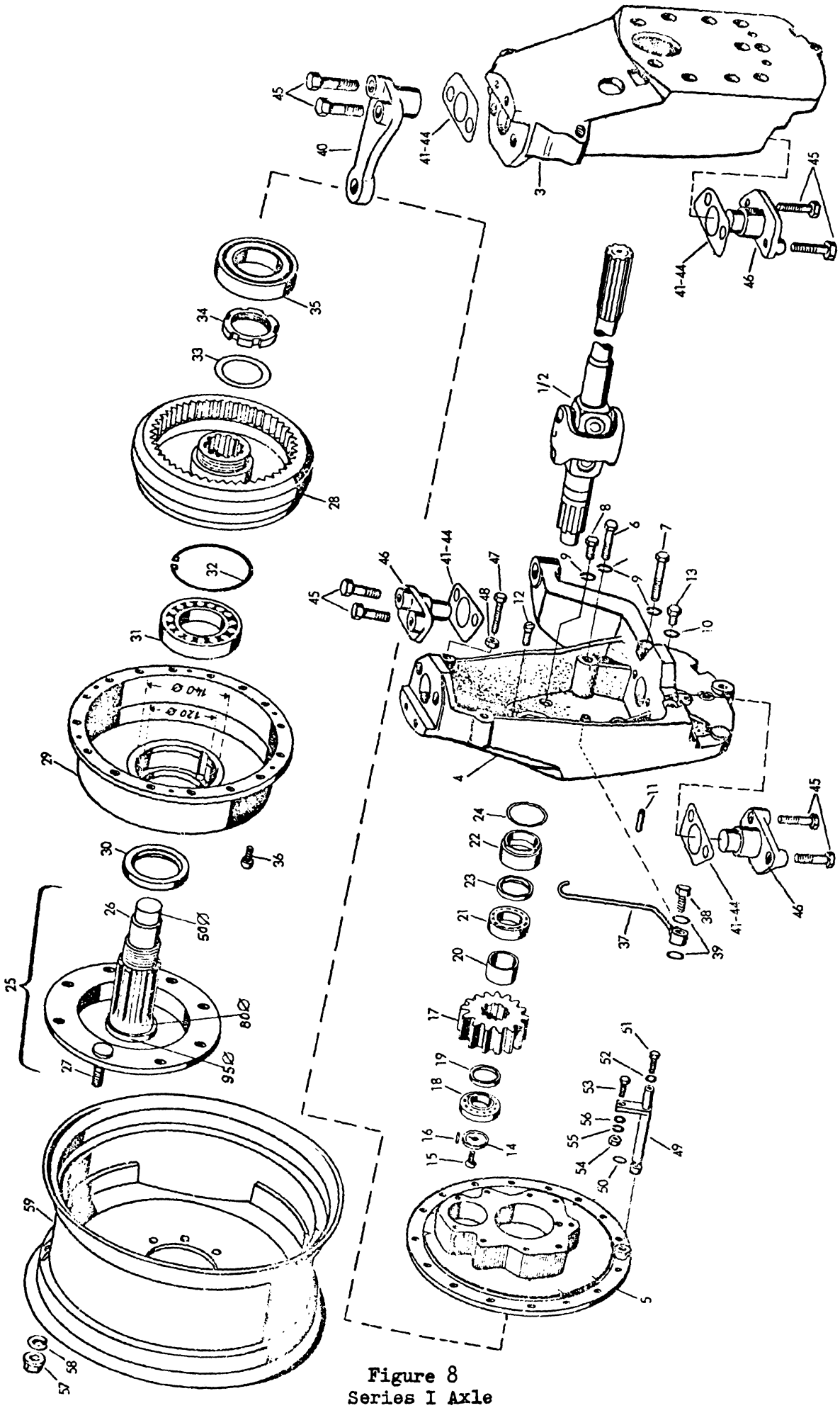

Figure 8
Series I Axle

REPLACING THE HALFSHAFT AND PINION BEARING

1. Place the carrier plate with the pinion bore vertical. Final drive -shaft at the bottom.
2. Replace the outer race of bearing (18) and position the inner race in it.
3. Replace the smaller distance plate (19) on top of inner race.
4. Place the pinion gear on top of the distance piece (19)
5. Place distance piece (20) on top of pinion and inner race of bearing (21).
6. Centralise the bearings (18-21) and pinion gear using a mandrel (see page 30).
7. Replace the outer race of bearing (21).
8. Replace the oil seal housing (22) complete with oil seal (23)
9. Fit shims to give 0.20mm preload (approximately 0.8mm thickness of shims).
10. Connect the carrier plate (5) to axle support (4) Coat both faces with jointing compound.
11. Remove the mandril and check the pinion gear pre-load to see if correct.
12. Replace the driveshaft (1/2) pulling into position with special tool page 24.
13. Replace thrust washer (14) and spring dowel (16)
14. Replace countersunk screw (15) and lock using a centre punch.
15. Replace drain pipe (49)
16. Replace drain plug (51)
17. Replace carrier assembly to axle case
18. Replace reduction and final drive assembly to carrier housing.
19. Refill with correct grade of oil.

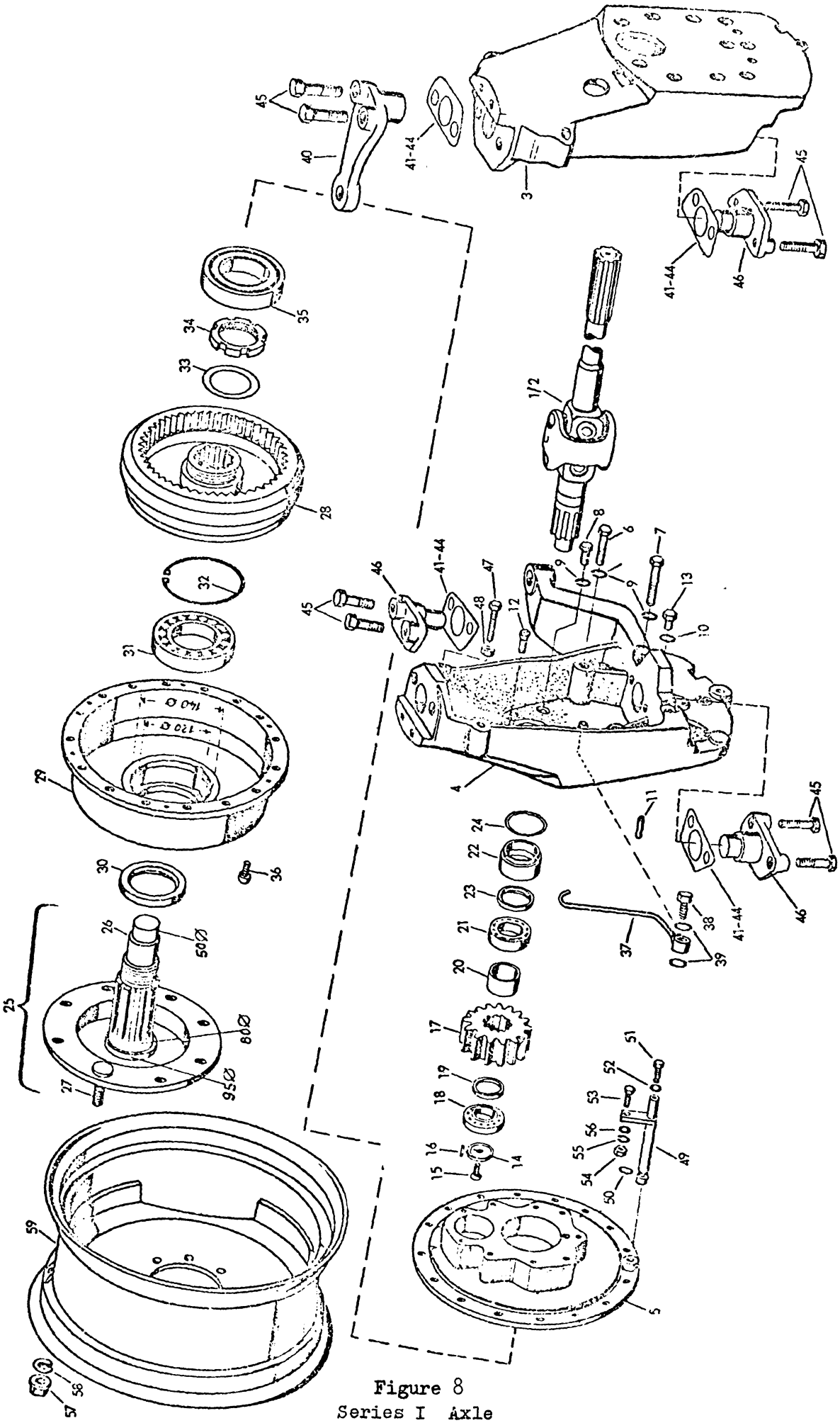

Figure 8
Series I Axle

KRAMER AXLE TOOLS

The following represents 1 set of tools

JACKING BOLTS

Quantity	Thread	Length	Specification	Tensile Strength	Type
6	M10	60mm	Din 933	8G	Bolt
2	M10	60mm	Din 912	8G	Allen Screw
8	M8	100mm	Din 933	8G	Bolt

SPANNER

One No. 17mm Ring Spanner
One No. 19mm Ring Spanner } on the same spanner

SOCKET

One 46mm (1 13/16 AF)

ALLEN KEYS

No. 3, 4, 6, 8 and 10mm

BEARING PULLER

One inner bearing type Kukku 21/7 Pat. No. 46/56

UNIVERSAL PULLER

0 to 6in diameters

SUPPORT BARS

Two $\frac{3}{4}$in diameter or square section bars 12in long

MANDREL FOR RE-ASSEMBLY OF FINAL DRIVES

Total length of mandrel 8.35in (212mm)

Dimension	A	B	C	D	E	F	G	H	J	O
Inches	0.78	3.15	0.47	0.98	2.95	1.63	1.95	2.15	1.58	1.56
Millimeters	20	80	12	25	75	41.5	49.5	54.5	40	39.5

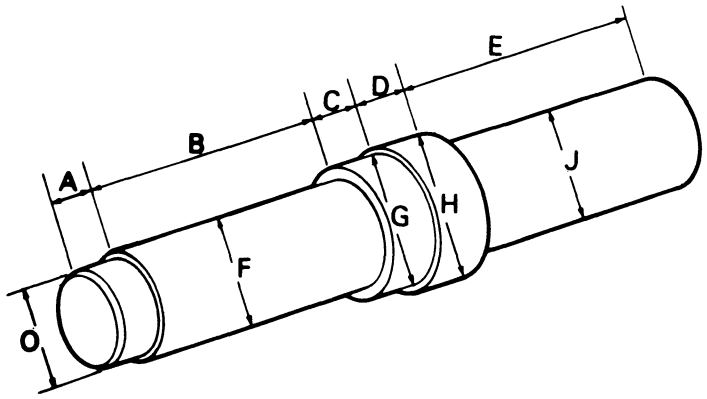

DRIVE FLANGE HOLDING TOOL

Dimension	A	B	C	D	E	F	G	H
Inches	12	2 x 0.13	1	0.25	0.38	4 P.C.D.	3	5
Millimeters	305	50.8 x 3.17	25.4	6.35	9.52	101.6	76.2	139.7

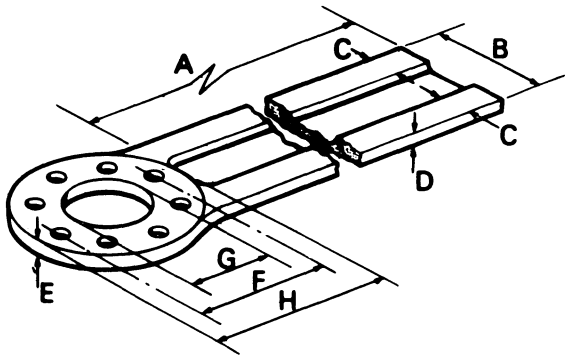

REDUCTION DRUM EXTRACTOR

Dimension	A	B		C
Inches	5.5	Machine	3.688/3.676	0.75
Millimeters	139.7	to	93.68/93.38	19.05

Thread M95 x 15

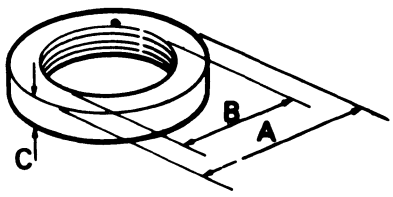

FINAL DRIVE LOCKNUT SPANNER

Use with a $\frac{3}{4}$ x 24in (19 x 610mm) tommy bar

Dimension	A	B	C	D	E	F - Six Equally spaced lugs
Inches	5.5	4.38	0.75	3.23	0.19	0.375 x 0.375 square
Millimeters	140	111	19	82	4.76	9.52 x 9.52

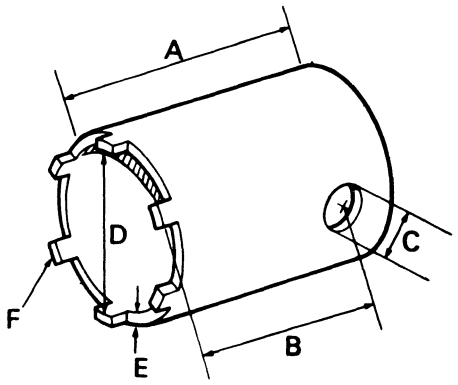

TRANSFER BOX FLANGE AND DRIVESHAFT PULLER

Dimension	A	B	C	D	E
Inches	4	2	0.50	0.56	0.53
Millimeters	102	51	12.7	14.28	13.49

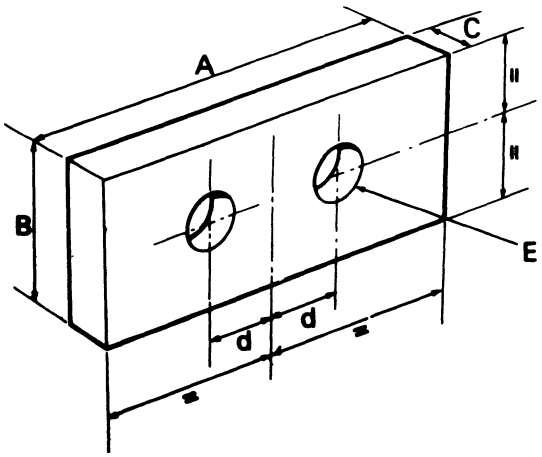

UNIVERSAL DRIVESHAFT PULLER FOR REDUCTION CASE

Use with a 4in (102mm) M10 x 1.5 bolt and nut

Dimensions	A	B	C	D
Inches	4	3	1	0.44
Millimeters	102	76	25.4	11.1]

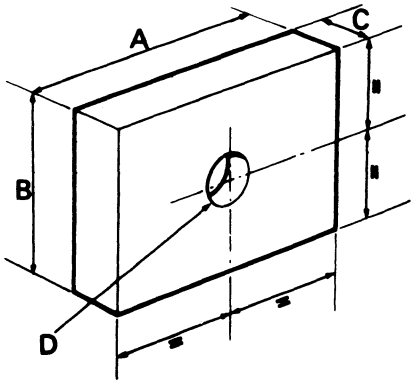

MAINTENANCE

Refer to illustration below for grease points, fill points and drain plugs. There is an additional grease point at each end of the track rod and three more on the cardan shaft; one on each universal joint and one to lubricate the splines of the sliding section.

FIRST 50 HOURS SERVICE

At the completion of the first 100 hours with a new machine, the oil from the front differential and both front hubs should be drained. Refill with new oil.

WEEKLY SERVICE

Apply grease to the six grease points on the front axle and the three on the cardan shaft, with a grease gun. One shot only should be given to the steady bearing greaser, A. Fig. 1. Check the oil levels in the front hubs and differential and top up if necessary.

500 HOUR SERVICE

Transfer Gearbox

The transfer gearbox is in the same sump as the main gearbox and filling is from the one plug in the gearbox cover. Draining is carried out from the plug under the transfer gearbox and also from the rear axle case.

The standard tractor instruction book should be consulted for details of servicing the full flow filter and oil changes on the gearbox.

1000 HOUR SERVICE (at least once a year)

Renew the oil in the front differential and both front hubs.

A. Steady bearing greaser
B. Steering pivot greaser
C. Hub drain plug
D. Hub level and filler plug
E. Differential drain plug
F. Differential level and drain plug

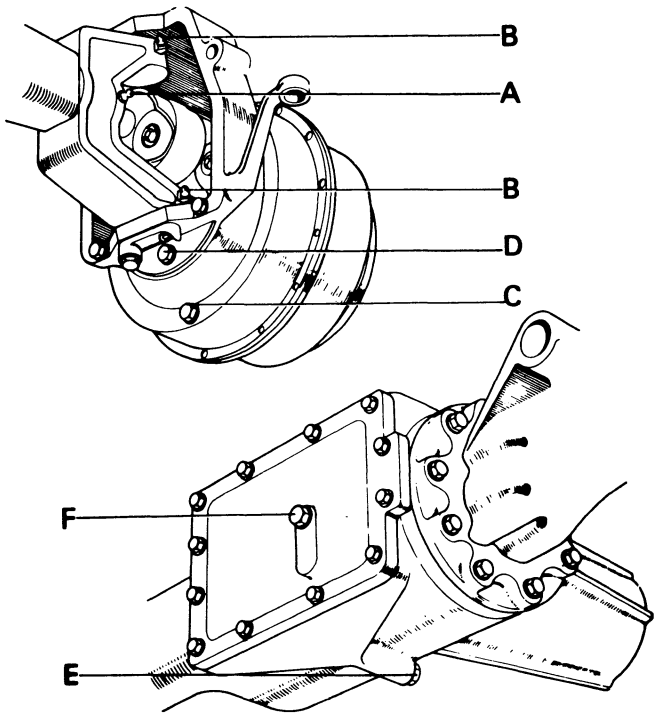

SERVICE NOTES

APPROVED LUBRICANTS

Application	Grade	Approved Lubricant	
Front differential and front hubs.	SAE 90	AMOCO	Amoco Gear Lubricant SAE 90
		B.P.	Gear Oil SAE 90
		CASTROL	Castrol ST or Agricastrol Gear Oil Light
		ESSO	Gear Oil ST 90
		MOBIL	Mobilube C90
		SHELL	Dentax 90
Grease points	2	AMOCO	Amolith Grease 2
		B.P.	Energrease L2
		CASTROL	LM Grease
		ESSO	Beacon 2
		MOBIL	Mobilgrease MP
		SHELL	Retinax A

OIL CHANGING

Drain when the oil is warm. Clean off all the dirt from the plugs and grease points. Remove both the filter and drain plugs and allow a few minutes for all the oil to drain out.

Replace the drain plug and refill with oil until it just overflows. Replace the plug. After running the tractor for a short time (half an hour or so) check the level for settlement and top up if necessary.

CAPACITIES (Approx. refill)

Front hubs 3 pt (1.75 litre) each
Front differential - $6\frac{1}{2}$ pt (3.8 litre)

TYRES

To prevent undue 'wind-up' between the front and rear axles the correct rolling radius of front and rear tyres should be maintained. The correct tyre pressures according to the loading of the tractor should be maintained. Water ballast may be used if required in the manner described in the basic tractor instruction book.

When it becomes necessary to replace tyres, the same size as originally fitted should be used. As the rolling radius differs for different makes of nominally the same size, it is preferable to replace with the same make of tyre. New tyres on one axle should not be mixed with worn tyres on the other.

TYRE PRESSURES

Road Work	: front	(10-24 6-ply rating) 26 lb/in^2 (1.82 kg/cm^2)
		(11-24 4-ply rating) 14 lb/in^2 (0.98 kg/cm^2)
	: rear	17 lb/in^2 (1.9 kg/cm^2)
Field Work	: front	12 lb/in^2 (0.84 kg/cm^2)
	: rear	12 lb/in^2 (0.84 kg/cm^2)
With front loader	: front	(10-24 6-ply rating) 26 lb/in^2 (1.82 kg/cm^2)
		(11-24 4-ply rating) 14 lb/in^2 (0.98 kg/cm^2)
	: rear	12 lb/in^2 (0.84 kg/cm^2)

TRACK WIDTH

It may appear that the front track width may be altered by changing the wheel centres round. This must <u>not</u> be done because the steering will be affected.

The front track is 66 in (1.70 m). The toe-in of the front track should be zero to 3/64in (1.0 mm).

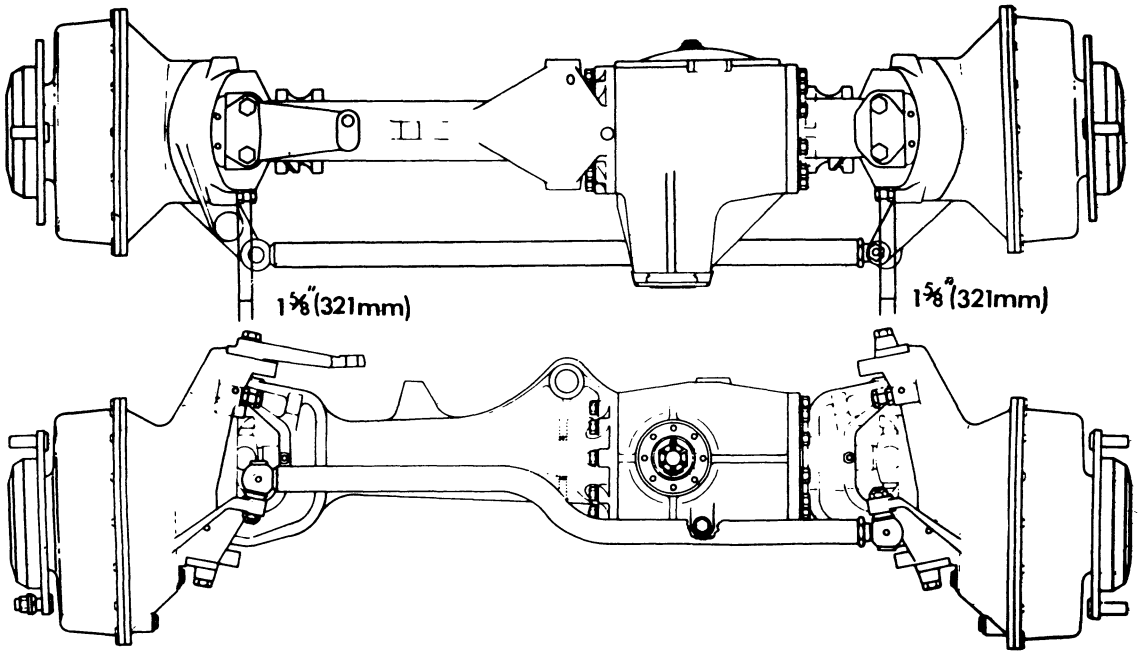

FINAL DRIVES

The 4-wheel drive is only fitted to tractors with 9/50 final drive ratios. This must not be altered otherwise the ratio between the front and rear axles will be wrong.

FRONT AXLE WEIGHT

Maximum recommended loading on the front axle is 7000 lb (3200 kg).

GEAR SELECTOR

Adjustment is provided on the gear linkage. When difficulty in gear selection occurs disconnect adjusting rod 'B' from lever 'A'. Move lever 'A' until it is midway between its two extremes. Move operating lever 'C' until it is midway between the two notches and then connect the two levers with the adjusting rod.

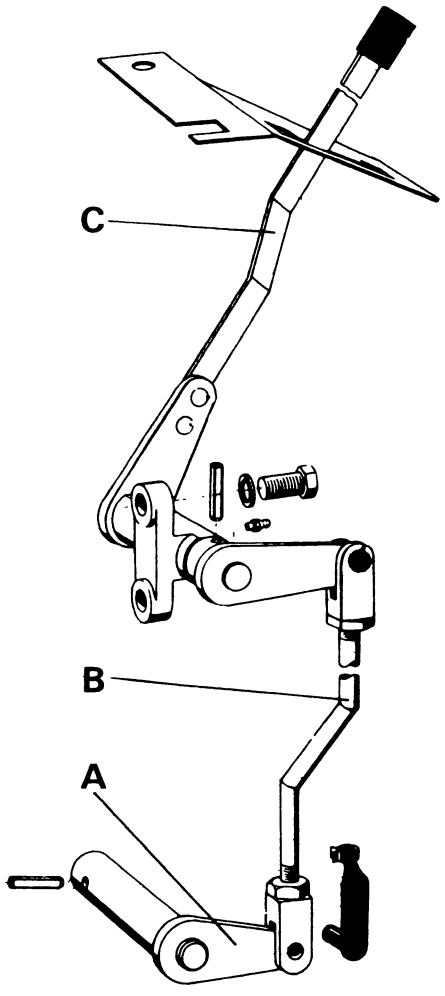

1210 4WD. MK. II TRACTORS
TRANSMISSION AND FRONT AXLE

CASE CORPORATION

Pub 9-37172

PRINTED IN U S A

CONTENTS

	Page
Removing a final drive unit from front axle	3
Removing half-shaft bearing from axle case	3
Refitting half-shaft bearing	4
Refitting final drive unit to axle case	4
Replacement of final drive oil seals or half-shaft	6
Removing half-shaft from final drive carrier	7
Assembling a final drive unit	8
Fitting half-shaft into final drive carrier	9
Assembling final drive carrier to housing	10
Dismantling and re-assembly of differential	11
Removing pinion shaft from differential housing	13
Re-assembly of differential	13
Mounting pinion shaft in differential housing	15
Assembly of differential gears and crown wheel	16
Removing transfer box from tractor	17
Removing the output shaft	17
Removal of engagement mechanism	17
Removal of driven shaft with gear	17
Removal of intermediate gear	19
Removal of 22-teeth drive gear	19
Re-assembly of 22-teeth drive gear	19
Fitting the 25-teeth intermediate gear	19
Assembling driven shaft	19
Fitting the engagement mechanism	19
Re-assembling the output shaft	19
Fitting output shaft into housing	20
Fitting transfer box into tractor	20
Special Service Tools	21

Removal of a final drive unit from front axle

Secure tractor so that it cannot roll away. Loosen wheel nuts, jack up the relevant side of axle then remove wheel.

Remove covering for half shaft and disconnect track rod, also steering ram if left-hand side, from final drive unit. Drain oil from unit by removing the filler level plug and drain plug.

Remove tab washer and adjusting nut from underneath the king pin. Using the special tool (ref. 12) extract king pin (in three stages).

Thread in king pin lower end is M14 and pulling screw M14 x 90mm.

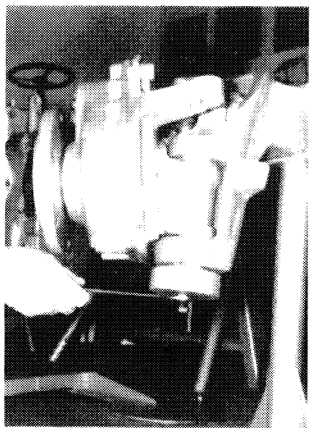

Figure E1
EXTRACTING KING PIN

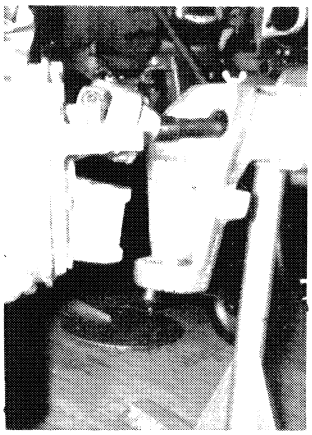

Figure E2
REMOVING FINAL DRIVE

Withdraw final drive unit (with half-shaft) from axle case. (Take care not to damage the half-shaft bearings). Remove the 'O' ring, sealing ring, distance washer and bearing-inner race.

Unless it is to be renewed the king pin upper bearing can remain in the axle case fork.

Removal of half-shaft bearing from axle case

If necessary the half-shaft bearing in the axle case can be pulled out of the axle case with an internal puller after first removing the oil seal and circlip.

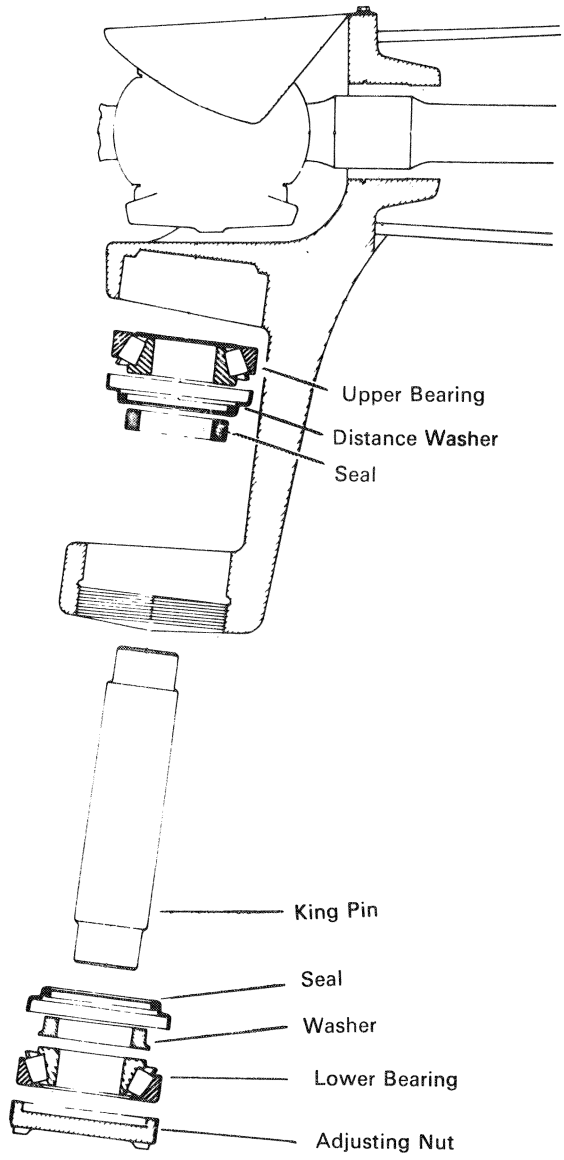

Figure E3
KING PIN BEARINGS

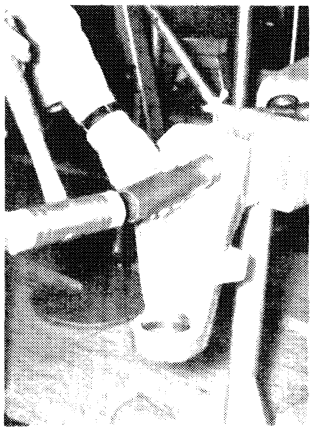

Figure E4
FITTING HALF-SHAFT BEARING



Figure E5
FITTING CIRCLIP



Figure E6
FITTING OIL SEAL

Refitting half-shaft bearing into front axle case

Using a hammer and special tool (ref. 13), drive needle bearing into the axle case sufficient to allow circlip to be inserted. Apply sealing compound to the outer surface of sealing ring and drive it into the axle case, using same tool as for bearing.

Refitting final drive unit to axle case

If the axle case, final drive housing, upper bearing or distance piece have been renewed the following dimensional procedure must be followed. Otherwise the two parts of the half-shaft will not be in line and the shaft joint will be subjected to unnecessary wear.

During machining of the final drive housing and axle case plus or minus deviations from the reference dimension can occur, **i.e. + deviations are added to the reference dimension – deviations are subtracted from the reference dimension.**

These deviations from the reference dimensions are stamped in the axle case and final drive housing figure E7.

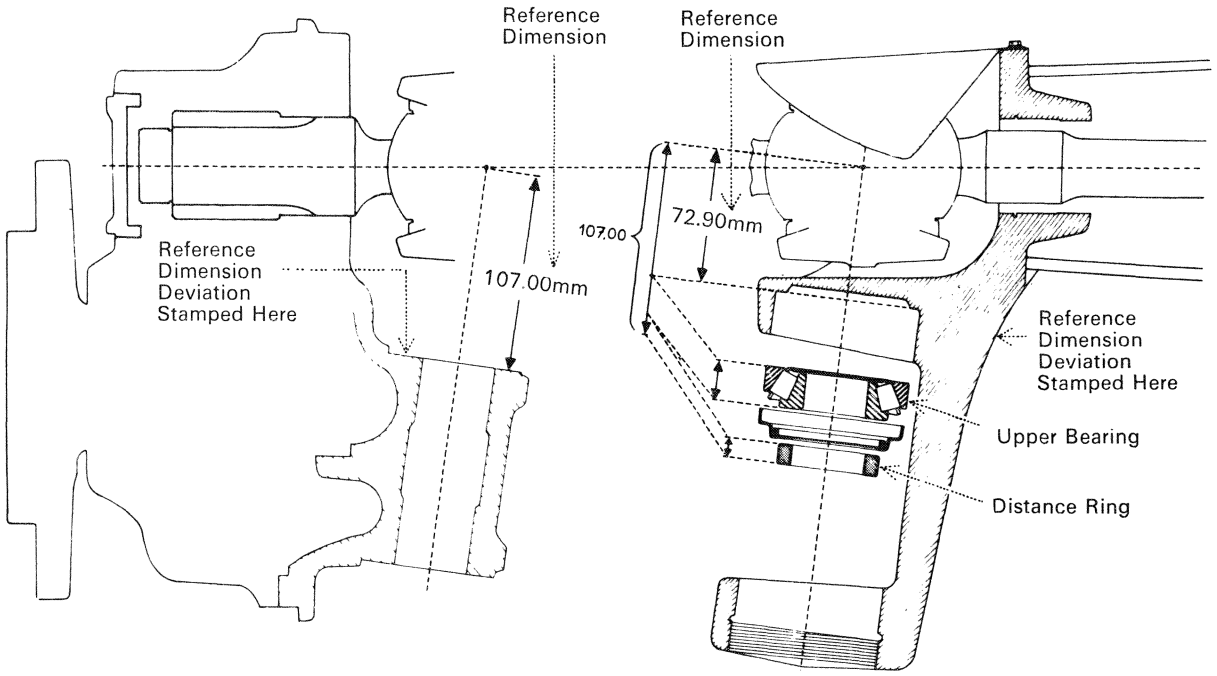

Figure E7
FINAL DRIVE AND AXLE CASE REFERENCE DIMENSIONS

The following dimensions should be noted before refitting a final drive unit to the axle case.

1. The reference dimension of the final drive housing is 107.00 mm.
2. The + or — deviation is to be added or subtracted. The deviation from reference dimension (for example + 0.10) is stamped in the upper part of the housing near the king pin bore.
   If there is no deviation, the stamping is "O".
3. The reference dimension of the axle case 72,90 mm.
4. The + or – deviation is to be added or subtracted. The deviation from reference dimension (for example – 0.10) is stamped on the upper part of the axle case bearing arm.
   If there is no deviation, the stamping is "O".
5. To calculate the required thickness of **distance ring,** the overall width of bearing to be fitted into in the upper part of the axle case must also be determined.

   The standard bearing width is 25,6 mm but the width should be measured as deviations are possible.

   The above measured or calculated dimensions 1 to 5 are necessary to determine the correct thickness of the distance ring fitted between the upper bearing and final drive housing.

Example 1: Assuming no plus or minus deviations in the axle case or final drive housing, i.e. both are stamped with "O" and the bearing width is 25,60mm.

1. Reference dimension of final drive housing	=	107.00mm
Plus or minus deviation (in this example no deviation)	–	0,00mm
Gives dimension for final drive housing	=	107,00mm
2. Reference dimension of axle case	=	72,90mm
Plus or minus deviation (in this example no deviation)	–	0,00mm
Gives dimension for axle case	=	72,90mm
3. Final drive housing minus axle case (107.0 – 72.9)	=	34,10mm
4. Minus bearing width	–	25,60mm
5. Gives distance ring thickness of (34.10 – 25.60)	=	8,50mm

Example II: Final drive housing stamped, +0,20 axle case stamped, –0,10: Upper bearing measures, 25,40mm

1. Reference dimension of final drive housing	=	107,00mm
plus deviation	+	0,20mm
gives dimension for final drive housing	=	107,20mm
2. Reference dimension of axle case	=	72,90mm
minus deviation	–	0,10mm
gives dimension for axle case	=	72,80mm
3. Final drive housing minus axle case 107,20 – 72,80	=	34,40mm
4. Minus bearing width	–	25,40mm
5. gives distance ring thickness of	=	9,00mm

When the distance ring thickness has been determined, outer race of bearing can be fitted into the axle case using the special tool (ref. 14) and a hammer.

Fit bearing inner race, distance ring, 'O' ring and sealing ring into the upper bearing seat using grease to hold them in position.

Now place the final drive housing (with half-shaft) in the axle case, taking care not to damage the half-shaft sealing ring.

Fit the king pin from underneath through the final drive housing and into the upper bearing. In order to avoid damage to the lower end of king pin, a safety screw (M14 x 30mm) should be screwed into the extraction hole. Remove screw after driving king pin into position.



Figure E8
FITTING UPPER BEARING

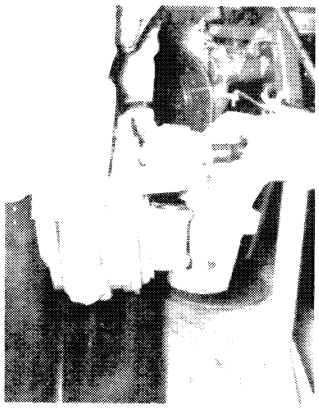

Figure E9
REFITTING FINAL DRIVE

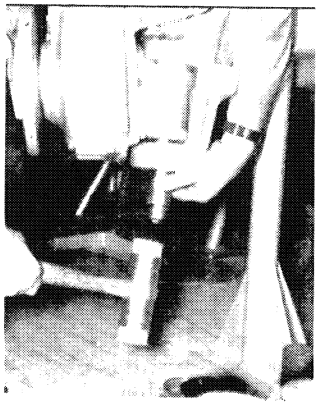

Figure E10
FITTING KING PIN



Figure E11
FITTING SEALS

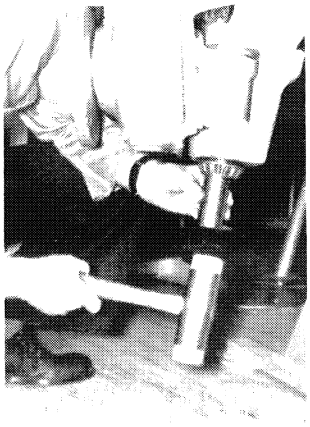

Figure E12
FITTING LOWER BEARING



Figure E13
FITTING ADJUSTING NUT

Fit sealing ring, 'O' ring and distance ring into the lower bearing seat with the special tool (ref. 15).

The bearing inner race is fitted to the lower part of the king pin, using the special tool (ref. 16) and the bearing outer race fitted using the special tool (ref. 15).

Smear the adjusting nut with oil, insert into the lower bearing arm and tighten until bearings have pre-load.

Pre-load approx 0,2mm—the final drive unit should turn when a torque of 3 kg metres (22 lb ft.) is applied.

Fit the tab washer to lock adjusting nut.

Refit half shaft cover, reconnect track rod and, if the left-hand side, steering cylinder to the final drive housing.

Fit oil drain plug and sealing ring. Fill to the level plug with an approved grade of oil.

Leave for some time and then re-check oil level. Capacity per final drive unit is about 1,60 litres. Apply grease to the grease fittings (final drive housing bearings, half-shaft). Fit front wheel. Lower tractor to ground.

Replacement of final drive oil seals or half-shaft

The final drive unit must first be removed from the axle case.

When the final drive unit has been removed, secure it in the clamp shown under ref. 1 in the special tools list.

Remove the 14 M10 setscrews which secure the final drive housing to the final drive carrier. Remove the plug from the upper face of the final drive housing.

If the plug thread in upper face of the final drive housing is M12 x 1.5, then a setscrew M12 x 1.5 x 90 should be screwed in to press out bearing (but not if the plug hole thread is 22 x 1.5).

In the final drive carrier are two M10 tapped holes into which two M10 x 60mm setscrews should be screwed.

If the plug hole thread is **M12 x 1.5,** the bearing is pressed off the half-shaft together with final drive shaft and gear by equal progressive turning of the three removal bolts. If the plug hole thread in the upper face of the final drive housing is **M22 x 1.5** then a drift is inserted through the final drive shaft and into the plug hole until it is against the half shaft. By turning the two removal bolts equally and by tapping the drift, the bearing is removed from the half shaft and the final drive housing with final drive shaft and gear is removed from the final drive carrier.

Note: Bearing may bind during removal so the half shaft must be turned from time to time (at least three times) through one revolution. To do this it is necessary to remove the removal screw M12 x 1.5 or the drift (whichever is the case). The two M10 x 60 screws can be left in. Turn the half shaft one revolution and reinsert the M12 screw, or the drift, and continue removal.

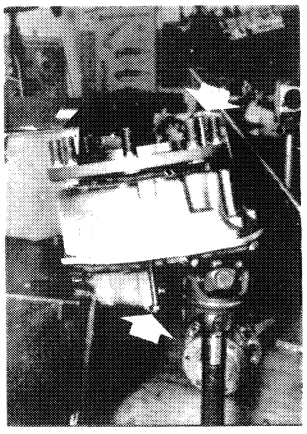

Figure E14
FINAL DRIVE CARRIER EXTRACTION BOLTS

When the final drive housing has been pressed off, attach special tool ref. 10—clamp for half shaft. This protects the seal from damage.

Measure and note the distance between the locknut and the end of the final drive shaft.

The locknut (M62) on the final drive shaft is secured with a tab washer. Loosen the tab washer and using a "C" spanner (70-100mm width) and a tube extension, loosen the locknut. To do this, attach the final drive shaft by its wheel bolt side to a suitable clamp.

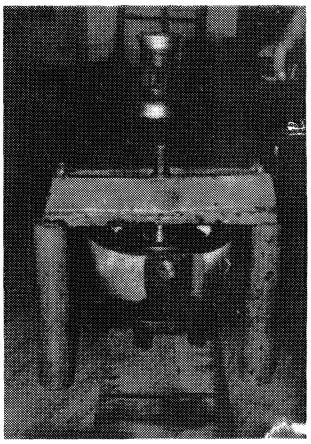

Figure E15
REMOVING FINAL DRIVE GEAR

In order that the gear can be pulled off the final drive shaft, there are two tapped holes with M16 thread in the gear, fasten special tool, ref. 2, to these holes. The gear can now be pulled off using a press against the central spigot. If a press is not available, heavy hammer blows may be applied, tighten up the pulling screws after each blow.

Now press the final drive housing off the final drive shaft. In the final drive shaft are two tapped holes with M10 thread. Screw two M10 x 100 setscrews into these two holes. By equal and progressive turns of these two bolts, tapping the final drive shaft between turns, the final drive housing can be pressed off the final drive shaft together with the parts fitted in it, i.e. circlip, bearing, and seal.

Remove the circlip fitted in the final drive housing. Insert special tool (ref. 5) from the outside inwards (through seal) against bearing and remove this bearing from the final drive housing. The seal can now be removed from the final drive housing, tapping it from the outside towards the inside.

Removal of half-shaft from final drive carrier

Unbolt the half-shaft clamp, which was attached after removal of the final drive housing, from the final drive carrier.

Drive the bearing far enough into the final drive carrier using special tool (ref. 9) to enable the split bush, fitted as a safety measure, to be taken out. Whilst doing this, hold the half-shaft firmly as support.

Using a **soft** hammer, drive the half-shaft out of bearing and out of the final drive carrier. Seal and the outer race of bearing can now be removed.

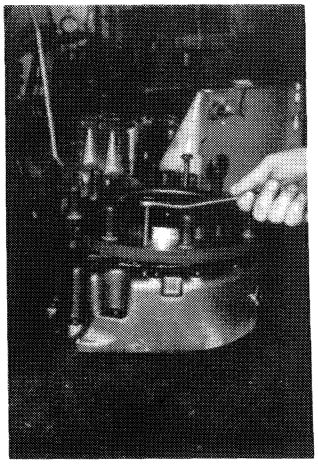

Figure E16
REMOVING FINAL DRIVE SHAFT



Figure E17
REMOVING SPLIT BUSH

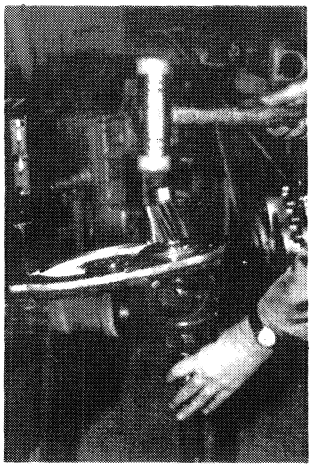

Figure E18
REMOVING HALF-SHAFT

Assembly of final drive unit

Cleanliness is essential for successful assembly. After dismantling, thoroughly clean all the parts with flushing oil or paraffin. Before re-assembling, inspect all parts for wear or damage. Carefully smear all the parts to be assembled with oil.

Assemble the following parts into the final drive housing in the given sequence:

Seal, distance ring, bearing, circlip, half shaft bearing in upper final drive housing, final drive shaft, gear, tab washer and locknut.



Figure E19
FITTING AN OIL SEAL

Coat the outer side of seal with sealing compound. Using special tool (ref. 3), fit it into the final drive housing. Apply grease to the inside. Position distance ring and then fit bearing using special tool (ref. 6). Fit circlip.

Before the final drive shaft and gear are fitted, bearing of half-shaft in upper final drive housing must be fitted into the final drive housing using special tool (ref. 5).

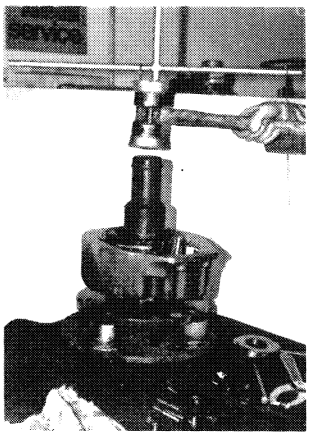

Figure E20
FITTING FINAL DRIVE GEAR

Inspect the spline profile on the gear and final drive shaft and remove any burrs with a stone or file.

Heat the gear in an oven to 100°F—110°C, (not with an open flame). Place the final drive shaft with the wheel studs downwards and support it so that the wheel studs are not touching the bench. Apply oil to the splined sections. Place the pre-assembled final drive housing on the final drive shaft. Lead gear into the splines, place special tool ref. 4 on gear then press (or drive with a hammer) the gear, and final drive housing, on to the final drive shaft.

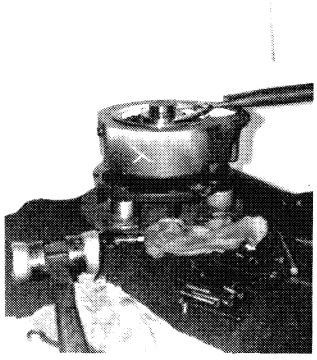

Figure E21
TIGHTENING THE GEAR RING NUT

Fit tab washer and locking nut and tighten with "C"-spanner. Check the distance from locknut to end of drive shaft; this should be the same as before dismantling.

With locking nut tightened, there should be about 3mm ($\frac{1}{8}$in.) of final drive shaft thread exposed.

Secure locking nut by bending the tab washer into the grooves in the nut and the gear.

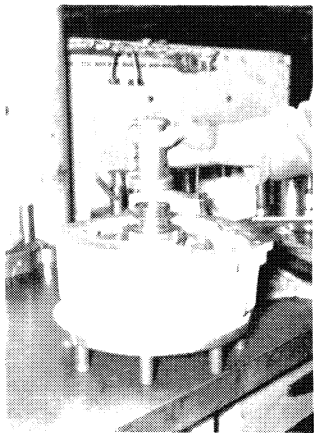

Figure E22
FITTING DRIVESHAFT BEARING

Assemble inner bearing on to final drive shaft.

Fitting half-shaft assembly into the final drive carrier

Smear seal on its outer face with jointing compound. Fit seal in the final drive carrier, using special tool ref. 7 and a hammer, or press. Smear inside of seal with grease.

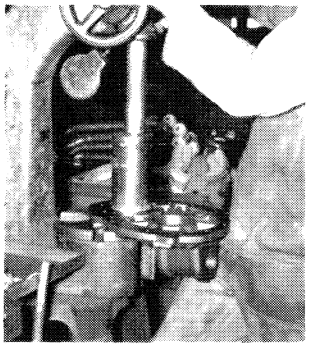

Figure E23
FITTING HALF-SHAFT OIL SEAL

Attach final drive carrier to the clamp (ref. 1) and insert outer race of bearing with special tool (ref. 6).

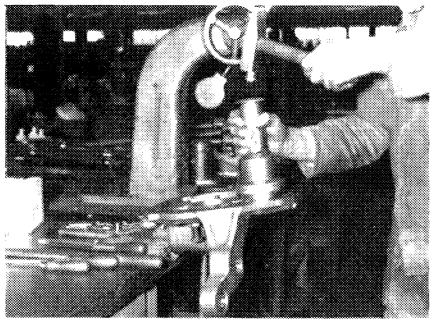

Figure E24
FITTING BEARING OUTER RACE

Carefully enter the half-shaft upwards into carrier through seal then hold half-shaft in that position.

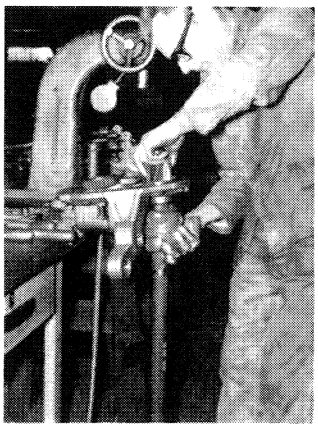

Figure E25
REPLACING HALF-SHAFT

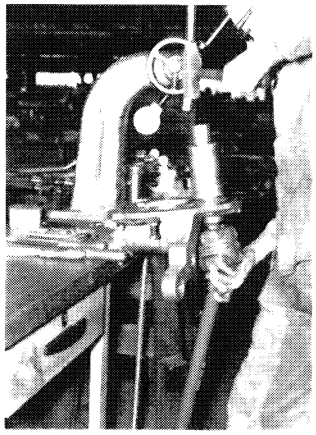

Figure E26
FITTING HALF-SHAFT BEARING

Whilst holding half-shaft firmly, fit inner race of bearing on to shaft, using special tool (ref. 9).

Drive bearing far enough on to half-shaft to enable the split bush to be fitted with its flat side uppermost Using a soft hammer, drive the half-shaft back until the gear sits well on to the split bush.



Figure E27
REPLACING SPLIT BUSH

Fit outer ring of bearing with special tool ref. 11 and smear with grease.

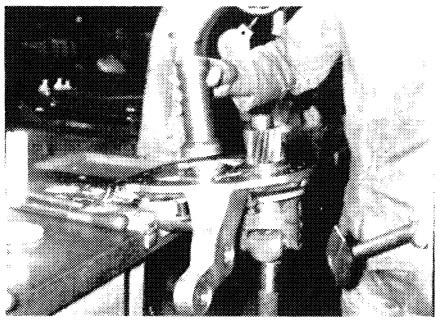

Figure E28
FITTING BEARING OUTER RING

To avoid damage to seal through movement of the half-shaft during subsequent assembly, place clamp (ref. 10) between half-shaft and final drive carrier and secure it in place.



Figure E29
FITTING HALF-SHAFT CLAMP

Assembling final drive carrier, with half-shaft, to final drive housing

The bearings of the half-shaft in the final drive unit must have 0,25mm pre-load and to establish the thickness of distance ring required it is necessary to make certain measurements.

1. Measure from the upper face of final drive housing to the inner race of bearing (fig. E30) Say this distance is 72,5mm, for example.



Figure E30
MEASURING FINAL DRIVE HOUSING

2. Next measure from the upper edge of gear teeth on half-shaft to the upper face of final drive carrier which, for example, we will say is 70,5mm, (fig. E31).

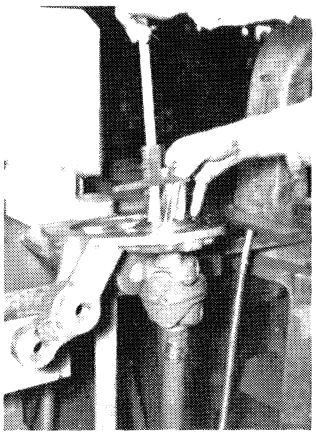

Figure E31
MEASURING HALF-SHAFT

Sample calculation of shim thickness

Measurement (1) above		72,5mm
less Measurement (2) above	–	70,5mm
gives difference of		2,0mm
add pre-load (0,25mm)	+	0,25mm
This gives a distance ring thickness of	=	2,25mm

The distance ring, of correct thickness, should be smeared on one side with grease and placed with the greased side against bearing in the final drive housing, ensure that flat side of the ring is placed against bearing.

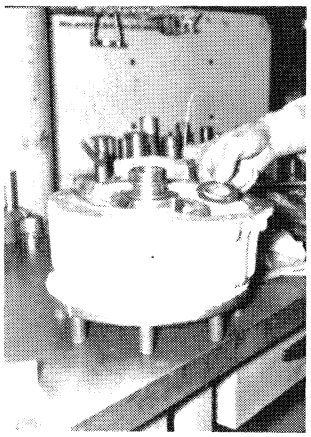

Figure E32
FITTING DISTANCE RING

Apply sealing compound to the faces of final drive housing and final drive carrier. Take final drive carrier out of the clamp and screw eyebolts into the two M10 tapped holes in carrier. Lift carrier with a suitable lifting device and lower it on to the final drive housing.

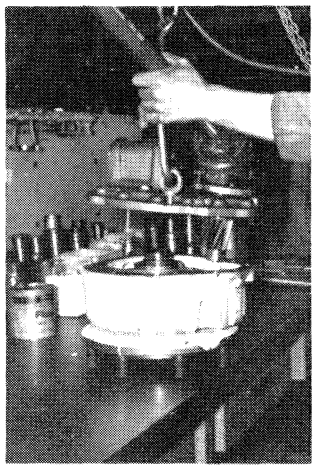

Figure E33
FITTING FINAL DRIVE CARRIER

It is important to ensure that the final drive shaft and half-shaft are inserted carefully into the bearings. The bearing is a push fit on the half-shaft and it is therefore, necessary to use a hammer and suitable drift to tap the half-shaft in.

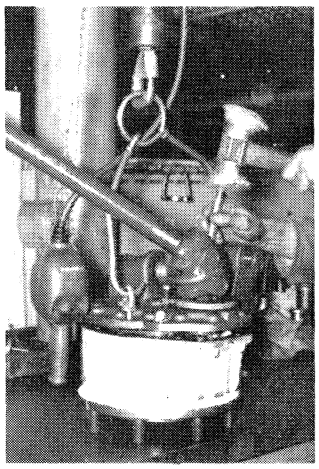

Figure E34
FITTING HALF-SHAFT INTO BEARINGS



Figure E35
ASSEMBLING REDUCTION UNIT

Insert two diametrically opposite bolts and screw up half tight.

Secure final drive unit once more in the clamp.

Insert and tighten bolts round final drive carrier.

Take off the clamp from between half-shaft and final drive carrier. Turn the half-shaft by hand to check if unit has been properly assembled.

Insert and tighten level plug and oil drain plug.

Insert oil filler screw with sealing ring.

To mount final drive unit on to axle case, refer to page 4.

Dismantling and reassembly of differential

Attach the complete differential to clamp (ref. 17) in order to loosen the locknut on driving flange. Grip the clamp, with differential in it, in a vice and remove pin securing the pinion nut. Using a 46mm socket spanner loosen the nut about two turns.

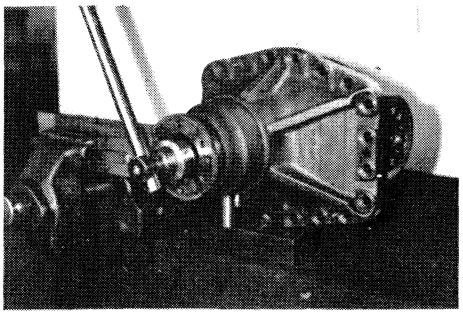

Figure E36
REMOVING PINION NUT

Remove securing wire from the 12 setscrews attaching crown wheel to differential cage. Loosen the screws about two turns. For further dismantling remove differential from clamp and lay it on bench.

Remove setscrews and tabwashers locking bearing adjusters to sides of differential housing. Screw out adjusting nuts from both sides of housing.

Remove bearing, which is on opposite side to crown wheel and carries the differential in the housing from inside towards the outside. To do this use a suitable drift (350mm long, tapered from 10mm dia. at one end to about 15-20mm dia at the other). Place the drift against the bearing inner race and strike with a hammer to push bearing out.

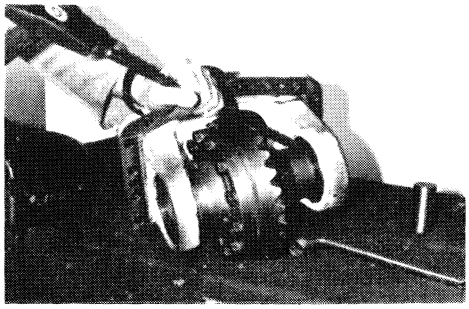

Figure E37
REMOVING RIGHT-HAND BEARING

Stand differential unit on bench with cage end-plate downwards. The differential cage is now uppermost. Place special tool (ref. 26) on the differential cage, revealed by the removal of bearing. Using a hammer, drive cage downwards until setscrews in end-plate touch wall of differential housing. The other side bearing is thus driven out.

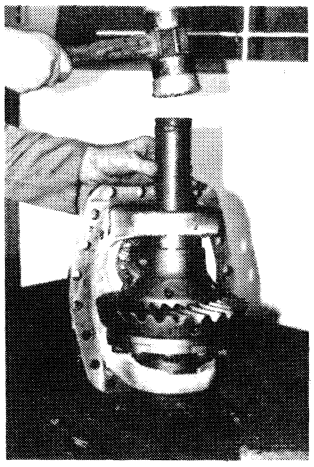

Figure E38
REMOVING LEFT-HAND BEARING



Figure E39
REMOVING DIFFERENTIAL ASSEMBLY

The differential can now be taken out of the differential housing.

Take out the 12 setscrews which secure crown wheel and end-plate to differential cage. The end plate can now be removed. In the differential cage are two tapped holes (thread M10) into which 2 extractor screws (M10 x 60) are screwed. By evenly tightening the screws, the crown wheel can be pushed off the differential cage.

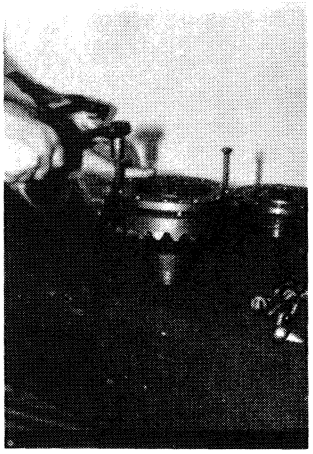

Figure E40
REMOVING CROWN WHEEL

The differential pin is removed, the planet assemblies taken out and the pinion fitted in the differential cage removed with its thrust washer.

Removal of pinion shaft from differential housing

Remove the loosened nut and take off the washer. The flange can now be pulled off using a suitable extractor.

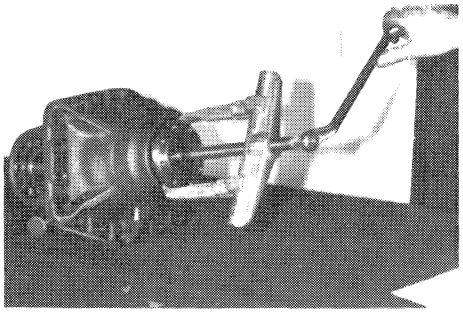

Figure E41
REMOVING PINION FLANGE

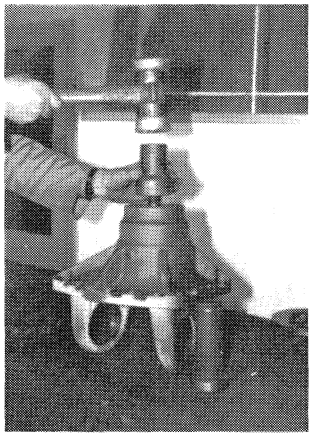

Figure E42
REMOVING PINION

The pinion shaft can now be driven out downwards using a hammer and drift.

Take the shim and the distance piece off the pinion shaft.

Remove the inner race of bearing from the pinion shaft.

The seal is now removed from the differential housing and then the inner race of bearing taken out. Remove outer race of bearing with shim from differential housing.

Re-assembly of differential

Cleanliness is necessary for successful re-assembly of a differential. All parts should be thoroughly cleaned with flushing oil or paraffin.

Before reassembly the parts should be checked for wear and damage. It is a mistake to reassemble parts which are not completely free from defects.

When reassembling, all parts should be smeared with clean oil.

IMPORTANT

Crown wheel and pinion must only be renewed in pairs.

The parts are identified with inspection numbers; pinion and crown wheel bear the same number.

The lapping mark (variation or tolerance) of the bevel pinion is etched on the front of pinion should also correspond to that on the crown wheel.

Pinion setting

If a new pinion, or pinion bearings, are being fitted it will be necessary to fit the appropriate shim behind the pinion inner bearing, so that the correct pinion setting is maintained. This ensures that the crown wheel and pinion teeth are then in correct mesh.

To calculate the thickness of shim required:

1. Note the housing setting dimension, this is 158,00mm.
2. Check what deviation was made during machining the differential housing. This is marked on the flange face of housing; plus dimensions should be **added** to the setting dimension and minus dimensions **subtracted.** If there is no deviation the face is marked "O,O."

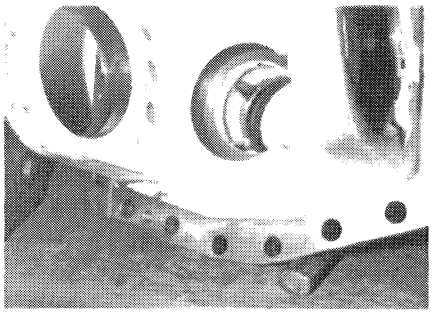

Figure E43
DIFFERENTIAL HOUSING DEVIATION

3. Note the pinion setting dimensions, this is 124,70mm.
4. Check what deviation was made during machining of pinion. This is marked on the pinion face, and also on crown wheel; plus dimensions should be added to the setting dimension and minus dimensions subtracted. If there is no deviation the marking is "0,0."

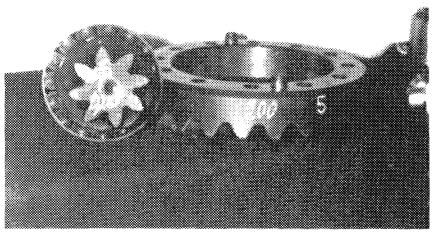

Figure E44
DIFFERENTIAL PINION DEVIATION

5. Measure the width of the pinion inner bearing. The standard width of bearing is 29,25mm but bearing must be measured as deviations up to 0,5mm are possible.
6. Calculate the thickness of shim by comparing measurements 3, 4 and 5 with measurements 1 and 2 as in the following example.

The shim is fitted **behind** the inner bearing.

Example 1

Differential housing and pinion shaft are, in this example, without + or – deviations, i.e. they are marked "O".

Setting dimension of differential housing (no + or – deviation)		158.00mm
Minus setting dimension of pinion shaft (no + or – deviation)	–	124,70mm
Gives a difference; housing to pinion shaft of	=	33,30mm
Minus width of bearing (standard width)	–	29,25mm
Gives a shim thickness of	=	4,05mm

Example 2

For this example, the differential housing is marked with +0,20.
The pinion shaft is marked with –0,10.
The bearing K951832 is its standard width = 29,25mm

To the given setting dimension of the differential housing	=	158,00mm
add the deviation +0,20	+	0,20mm
This gives a dimension for the differential housing of	=	158,20mm
From the given setting dimension of the pinion shaft	=	124,70mm
subtract the deviation –0,10mm	–	0,10mm
This gives a dimension for the pinion shaft of	=	124,60mm
giving a distance between differential housing and pinion shaft of	=	33,60mm
From this distance subtract the width of bearing to obtain the required shim thickness of	–	29,25mm
	=	4,35mm

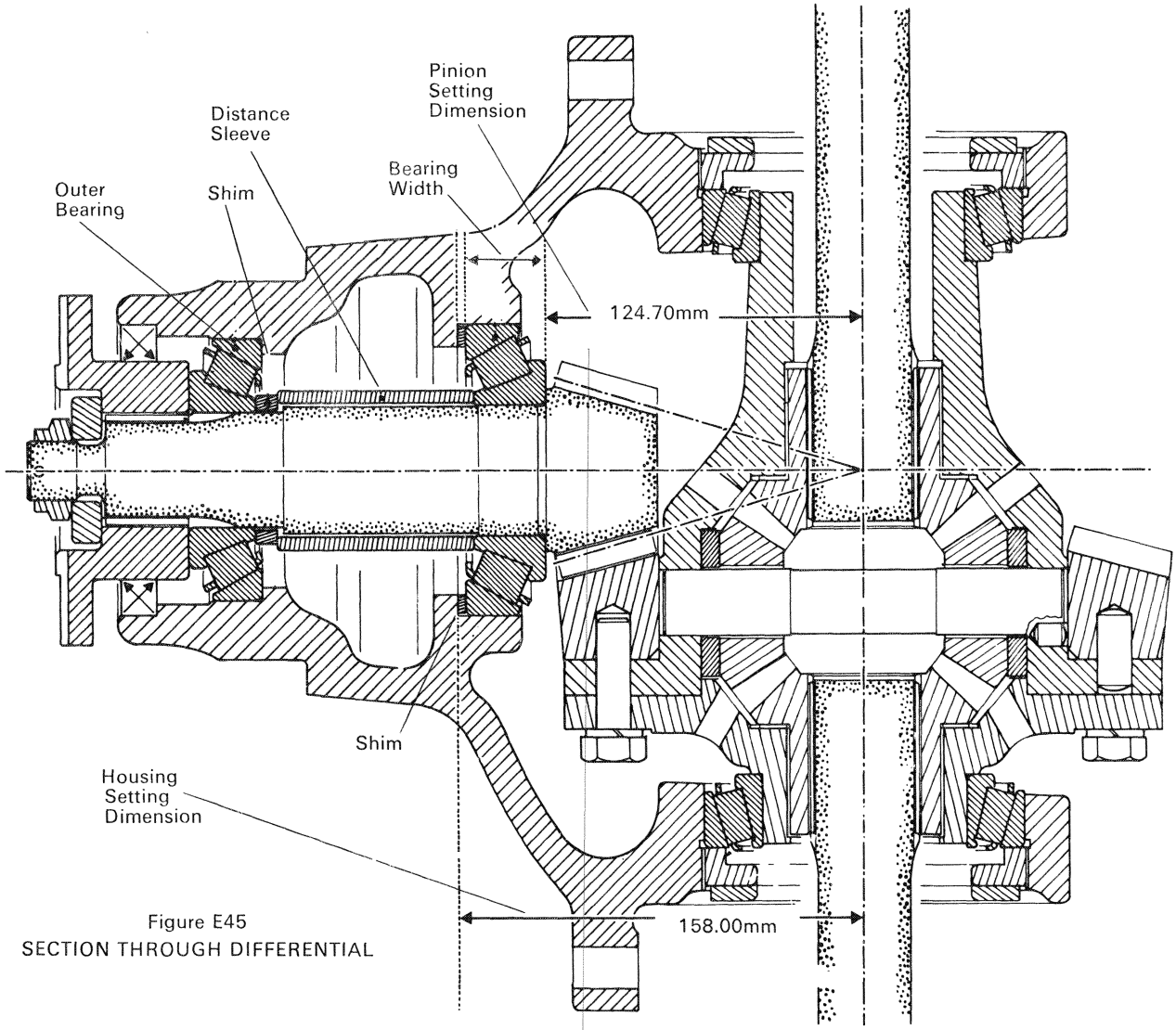

Figure E45
SECTION THROUGH DIFFERENTIAL

Mounting pinion shaft in differential housing

After calculating the shim thickness for the correct setting of the spiral bevel gears. the fitting of the pinion shaft bearings can be commenced.

The two pinion bearings must be assembled without pre-load or end float and it is, therefore necessary to calculate the thickness of shim required to obtain this setting when the pinion flange nut is fully tightened.

Firstly the width of the second (outer) pinion shaft bearing must be measured. The standard width is 25,00mm but bearings can have deviations of up to 0,5mm. Measure the width of the bearing inner track only, not the overall width as measured on previous bearing. Note this measurement as it is necessary for determining the thickness of shim required.

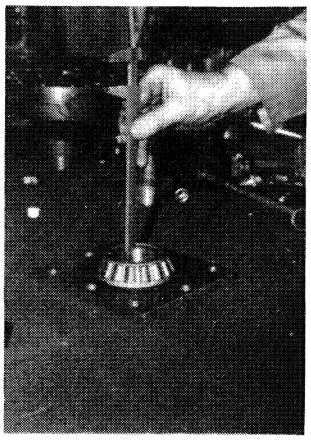

Figure E46
MEASURING PINION BEARING

Mount inner race of bearing on pinion shaft behind the gear teeth, using special tool (ref. 27).

Place the pinion setting shim, of thickness previously determined, on the seat area for outer race of bearing in the differential housing. Press on bearing outer race, ensuring that shim and bearing outer race sit firmly on seat.

Press outer race of bearing into coupling flange side of differential housing as far as the seat area, using special tools (ref. 26 and 28).

Place pinion shaft, with bearing inner race—from underside of the differential—into the differential housing.

Next, lay the differential housing, with pinion shaft in it, on to the front face of the pinion shaft, a suitable support being placed under the pinion. Fit distance sleeve against inner bearing, then fit outer bearing through neck of differential housing.

To determine the thickness of shim required between distance sleeve and bearing, the distance from the end of the differential housing to the distance sleeve must first be measured.

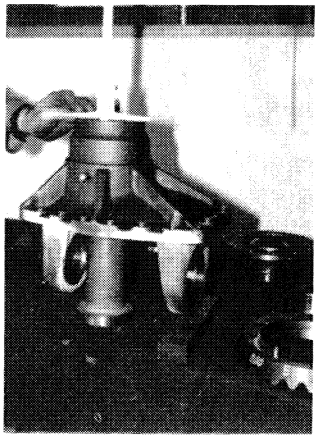

Figure E47
MEASURING TO FACE OF DISTANCE SLEEVE

In this example, a distance of 49,60mm is measured.

Take the pinion shaft out of the differential housing and fit the inner race of bearing into its outer race already pressed into the differential housing.

Now measure the distance from end of differential housing to bearing.

In this example a distance of 18,20mm is measured.

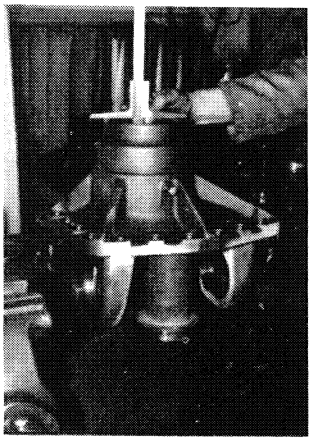

Figure E48
MEASURING TO FACE OF PINION BEARINGS

The width of the bearing inner race is in this example 25,00mm as already measured at the commencement of the reassembly.

The measurements described above must be made in every case. The values given here are only examples and cannot be used in practice.

The measurements are used in the following calculation to determine the correct thickness of shim to fit between distance sleeve and bearing.

Measurement from end of differential housing to distance sleeve—in this example		49,60mm
Subtract the distance—end of differential housing to bearing in this example		18,20mm
giving a distance of		31,40mm
From this result, subtract the width of bearing inner track in this example	–	25,00mm
giving the remaining distance between distance sleeve and bearing—i.e. the thickness of the shim required to give no pre-load and no clearance	=	6,40mm

The pinion, with bearing inner race fitted to it, can now be replaced in the differential housing.

Place differential housing, containing pinion shaft, on a suitable support placed under face of pinion.

Fit distance sleeve and bearing setting shim, of calculated thickness, on pinion shaft. Fit the inner race of bearing on pinion shaft in the neck of differential housing, using special tool (ref. 29) and—if necessary—a hydraulic press.

To check the bearing adjustment,—i.e. to check that the calculated shim thickness is correct, fit the drive shaft coupling, nut and washer and firmly tighten nut. To do this use special clamp (ref. 17) for pulling on the flange and the nut.

If an hydraulic press is available, place differential housing, with pinion shaft, supported under the press in such a manner that the flange can be pressed against inner race of bearing instead of using the locknut and washer. (When using the press, pinion shaft should be so supported that the differential housing can be turned and special tool (ref. 29) used to press against driving flange.)

The pinion shaft, whether fully assembled with flange, washer and nut or held under the press, must not bind. The bearings must have no play, when flange has been assembled and pinion shaft should be able to be turned by hand.

If the adjustment is too tight or too slack, the shim (between distance sleeve and bearing) must be replaced by a thicker or thinner one, as required.

When bearing setting is correct, remove driving flange and fit seal into the differential housing after smearing outside of seal with sealing compound: use special tool to press seal into position and smear lips with grease.

Before fitting drive shaft coupling flange, apply sealing compound to the front face (the face next to the bearing). Press flange on to pinion shaft, using special tool (ref. 29).

Replace nut and washer. Use clamp (ref. 17) to hold flange and after fully tightening nut, secure with split pin.

Assembly of differential gears and crown wheel

The bushes which support the gears can be pressed into the differential cage and end-plate, using special tool (ref. 31).

Smear the thrust washers with oil then fit these on the gears before placing one gear in cage and the other in the end-plate. Fit pinions and thrust washers in cage then fit pin through cage and pinions. Locate pin with dowel pin then, whilst holding gear from falling out, turn end-plate over and fit on cage.

To fit the crown wheel, hold cage and end-plate together then turn them over so that end-plate is on bench and the long boss of cage is pointing upwards. Fit dowel pins into crown wheel bores then warm crown wheel in an oven (**not with an open flame**) to 120°C before fitting it in position on cage: if no oven is available, carefully tap the crown wheel into position with a soft-faced hammer.

Replace the 12 setscrews with spring washers, and tighten evenly to 20,5 kg metres (145 lb ft). Tap the crown wheel whilst tightening and when screws are fully tightened, check that crown wheel is fully seated all the way round.

Place the differential assembly in the differential housing, positioned so that crown wheel will be on right-hand side of pinion when unit is installed on tractor. Lay the whole unit (housing and differential) on bench, sideways so that long boss of differential cage is pointing upwards.

Drive inner track of bearing on to diff. cage, using special tool (ref. 30) and outer track into diff. housing, with tool (ref. 20), until the adjusting nut thread is fully exposed.

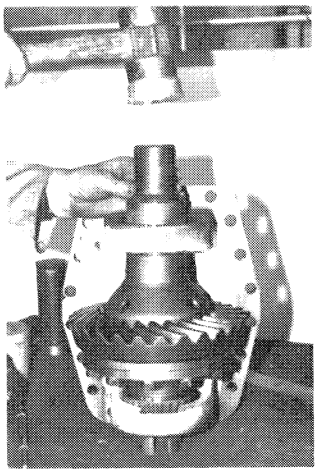

Figure E49
FITTING DIFFERENTIAL BEARINGS

Screw bearing adjusting nut in position until about two threads are showing proud of diff. housing then turn assembly over and fit the other side bearing in the same manner.

Attach differential to special tool (ref. 17) and clamp in vice then tighten crown wheel setscrews to 20,5 kg metres (145 lb ft.) before securing with wire.

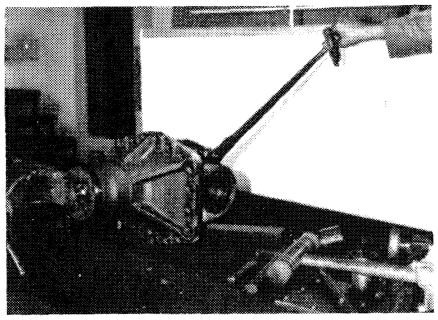

Figure E50

TIGHTENING CROWN WHEEL BOLTS

To adjust differential side bearings remove clamp from pinion then hold diff. housing in vice. Turn bearing adjuster on crown wheel side inwards until crown wheel tooth backlash is 0,15 to 0,18mm and tighten adjuster on other side until bearings have no free-play but not more than 0.2mm pre-load.

First check the bearing setting, then the tooth backlash and finally the tooth contact marking.

Check that the side bearings have no free-play then check that pinion and crown wheel can be turned quite freely. If pinion is considerably harder to turn that it was before the differential was fitted the bearings have excessive pre-load.

Mount a dial gauge at right-angles to a crown wheel tooth then, whilst holding pinion stationary, move crown wheel and observe gauge reading; this should be 0.15 - 0.18mm.

Smear a few crown wheel teeth with marking compound and turn these against pinion until a clean contact marking is obtained. If the contact mark is not in the middle of the tooth and towards the inner end, a mistake has occurred when calculating the thickness of the pinion meshing shim fitted behind bearing K951832.

Secure bearing adjusters with tabwashers and setscrews.

Removal of transfer box from tractor

Drain the transmission oil (capacity approx 41 litres (9 gal) and disconnect engagement lever.

Remove gearbox top to gain access to coupling. Remove bolt from coupling then slide coupling rearwards on to pinion and clear of transfer box. Disconnect driveshaft from output flange and place a jack under transfer box. Remove bolts attaching transfer box to main frame then lower box from tractor.

Removing the output shaft

Lay transfer box upside down on the bench and remove base plate.

Fasten clamp (ref. 17) to output shaft flange and grip the clamp in a vice. Remove securing wire from the two setscrews and remove these from flange.

Remove locking washer. Take transfer box out of clamp and lay it once more upside down on bench. Withdraw flange with a suitable puller.

Remove the six cap screws securing front cover to box case.

In the pitch circle of these screws are two tapped holes and into these holes screw two extraction screws (thread M10 x 100mm).

Lay clamp (ref. 18) across front cover and insert two setscrews through clamp and into output shaft.

By equally tightening the two setscrews in the front cover, output shaft can be withdrawn from transfer box housing together with the following; seal (fitted in front cover), front cover and bearing with circlip.

Remove seal from front cover.

The needle roller bearing which carries the front output shaft is fitted inside driven shaft and can now be removed.

Removal of engagement mechanism

To remove engagement mechanism, remove pin which holds the selector fork on selector shaft, using a drift (8mm dia) inserted through hole in front of case and driving pin rearwards.

Selector shaft can then be pulled sideways out of fork and housing. The sliding dog clutch can be removed through the bore for the front cover. Take selector pins out of selector fork and remove fork from the bottom of housing. Remove selector shaft oil seal from case.

Removal of driven shaft with gear

Remove circlip from driven shaft. The thin spacer behind circlip can then be removed.

Lay transfer box on its front and take off rear cover after removing the eight setscrews.

Return transfer box to its upside down position.

Place special tool (ref. 19) on output shaft (front-flange end) and, using either a press or a hammer, remove shaft by pushing it rearwards out of housing.

If gear cannot be removed from underside of transfer box housing, turn housing through 180° and drive the front main shaft bearing—still fitted in housing—sufficiently far towards the front to allow to be taken out.

Return transfer box back to its upside down position.

Front bearing can now be removed with special tool (ref. 20) driving it from front towards the rear.

Remove circlip and extract rear bearing with a suitable puller.

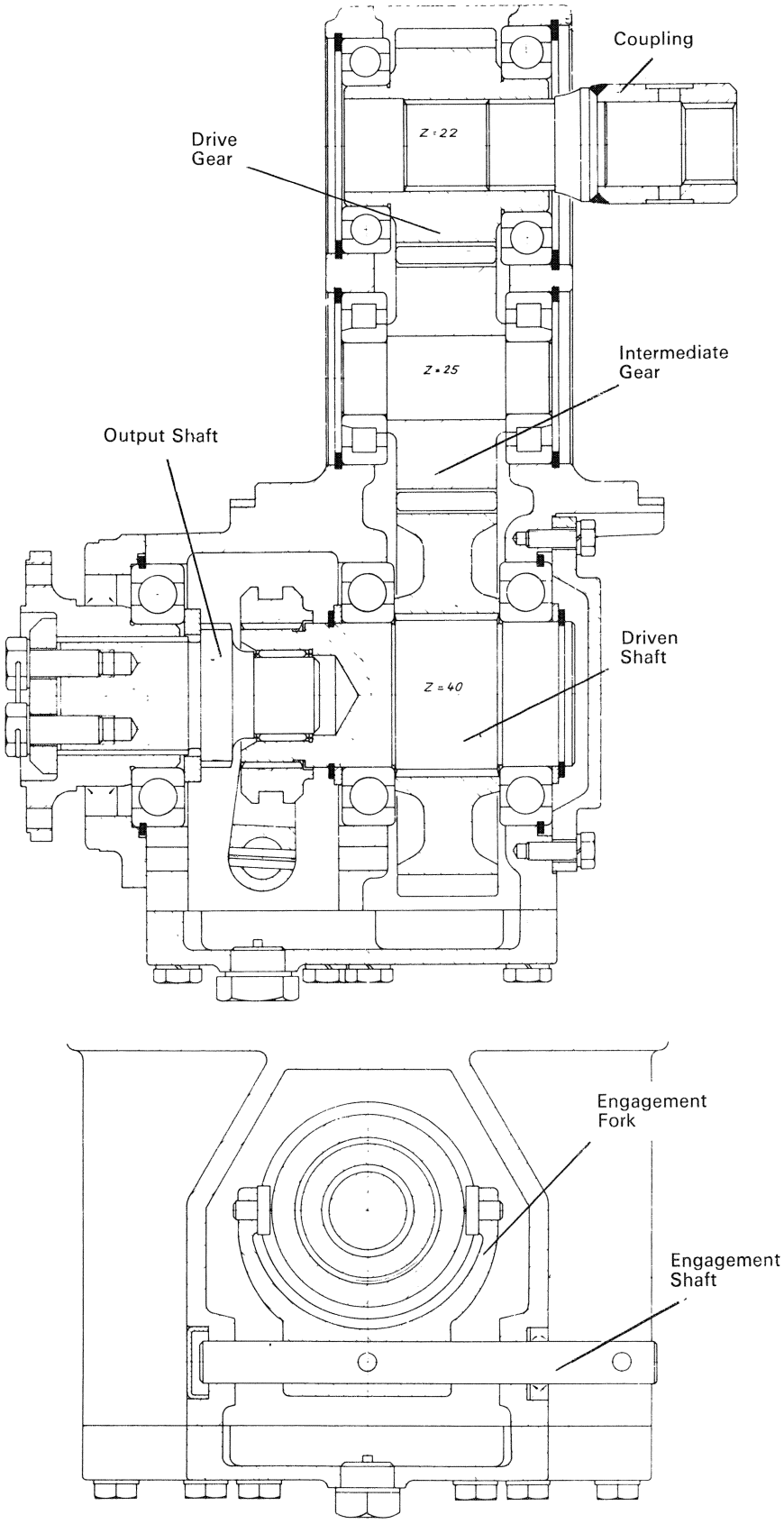

Figure E51
SECTION THROUGH TRANSFER GEARBOX

Removal of the Intermediate gear

Remove circlip from the transfer housing. Intermediate shaft can be pressed out using a suitable drift and a press. This frees the intermediate gear which can then be removed from the underside. Pull off roller bearing, which will remain on the shaft, using a suitable puller, or press.

The other bearing which remains in the housing can be removed with a hammer and a suitable drift.

Removal of 22-teeth drive gear

Place transfer box with its lower face on the bench. Remove circlips on either side of bearings which carry the drive gear. Using special tool ref. 22 remove the two bearings and the gear from the housing, driving them from the front towards the back.

Reassembly

All parts should be carefully washed in flushing oil or paraffin.

Inspect the parts for wear or damage. Smear all parts with oil during assembly.

Reassembly of 22-teeth drive gear

Place transfer box with its lower face on the bench. Press bearings on to the gear and fit circlip in the front bearing bore. The gear, with both bearings fitted, can now be pressed or driven with a soft hammer into housing far enough to enable circlip to be fitted behind bearing. By gently tapping, the bearing inner races any tension in the bearings which may have been caused in the reassembly can be relieved.

Fitting the 25-teeth intermediate gear

Place transfer box with its rear on the bench and place a suitable support under the intermediate gear bore so that the housing lies horizontally.

Press an inner race of one of the roller bearings on to the intermediate shaft in such a manner that the side of the bearing is against the shoulder of the shaft. Keep outer race handy so that it can later be fitted on to inner race.

Heat up the intermediate gear to 120°—150°C in an oven (not in an open flame) and insert it into the housing from the bottom with the long boss of the gear pointing upwards (forwards, towards the flange side).

The intermediate shaft can now easily be fitted into the warmed-up gear using a soft hammer. Care should be taken to ensure that the inner race sits correctly on boss of intermediate gear. The outer race is now driven into the housing sufficiently far to allow circlip to be fitted. Now turn the transfer box housing through 180° so that the flange side (front) is at the bottom.

Drive the second inner race of roller bearing on to the intermediate shaft using a hammer and suitable drift. Using special tool (ref. 21) fit the remaining outer race followed by circlip.

Any tension in the bearings which may have resulted during assembly can be relieved by gently tapping the inner races with a soft-faced hammer. Check that intermediate gear turns freely by hand.

Assembly of driven shaft with 40-teeth gear in transfer box housing

Press rear main shaft bearing with circlip on to driven shaft at the **opposite end** to the splines. Fit spacer and circlip.

Place transfer box housing with its front on bench. Support housing so that it is horizontal. Insert the 40-teeth gear into housing.

Insert driven shaft through bore in rear face of the housing—now facing upwards—until bearing on shaft touches the gear. To do this, a hydraulic or hand press can be used. If neither is available, use a soft hammer.

The second bearing is now pressed on to the shaft from the front using special tool and a press or soft hammer. Fit spacer and circlip.

Strike the shaft gently on both ends with a soft-faced hammer whilst turning the gear to relieve any tension which may have been caused in the bearings during assembly.

Apply sealing compound to the rear cover and housing face, or renew gasket, attach cover with the eight bolts and spring washers.

Fitting the engagement mechanism

Place transfer box housing with front face uppermost, supporting it so that it lies horizontally.

Apply sealing compound to outside of seal and fit it into the selector shaft bore using special tool (ref. 23).

Slide dog clutch on to splines of driven shaft, taking care to fit it with the shouldered side towards the gear.

Fit pins into selector fork, applying some grease, before fitting fork from the bottom into the dog clutch. Insert selector shaft through bore in housing and into the selector fork. Fasten the two together by inserting retaining pin. Applying sealing compound to core plug and insert plug with special tool (ref. 24) in selector shaft bore.

Reassembly of the output shaft

Fit seal in front cover after first applying sealing compound to outside of seal. Smear inside of seal with grease then fit cover on flange.

Fit circlip to bearing then press the bearing on flange—circlip towards. falnge and against front cover.

Put spacer on output shaft and press shaft into bearing and flange using special tool (ref. 25).

If end of output shaft is not sealed with an 'O' ring, apply sealing compound to this face of shaft and also to inner face of locking washer which fits on shaft to secure flange. Fit the two setscrews, tightening to 11 kg metres (80 lb ft). To tighten the two screws, use special clamp (ref. 17) and wire screws together, when tight.

Fitting output shaft assembly into housing

Place the transfer box housing with its rear face on bench; the front uppermost.

Fit needle roller bearing in the centre of shaft. Apply sealing compound to the front cover flange and the surface of housing then insert output shaft assembly into housing.

By gently tapping with a soft hammer on flange and turning the flange at the same time, drive output shaft assembly into housing far enough to allow the cap screws to be fitted through cover.

Tighten the screws equally, tapping the flange at the same time.

By turning the flange and operating the engaging mechanism, check that the assembled parts operate satisfactorily.

Clean base plate thoroughly with compressed air. Apply sealing compound to the surfaces of base plate and housing, or renew gasket, refit base plate, with the magnetic plug, and replace the 12 setscrews.

Fitting the transfer box into the tractor

With main frame and transfer box facings clean, and, if possible, using the original gasket, ensure that coupling is in position on tractor gearbox pinion shaft then lift transfer box into position.

Ensure that transfer case seats squarely against tractor main frame then tighten the retaining nuts.

When the nuts are fully tight, check that the drive coupling slides quite freely into the transfer box gear. If a new gasket is fitted between main frame and transfer box it will be necessary to adjust the thickness of the gasket, by peeling off some laminations, until the coupling slides freely into the transfer gear splines.

Replace bolt through coupling then refit gearbox top. Replace drive shaft to front axle then fit a new filter element before refilling transmission with an approved grade of oil.

SPECIAL TOOLS — MK II FRONT AXLE AND TRANSFER BOX

These tools are **not** available from David Brown Tractors or Churchill. Full dimensions etc. are given so that Distributors and Dealers can manufacture these tools in their own workshops.

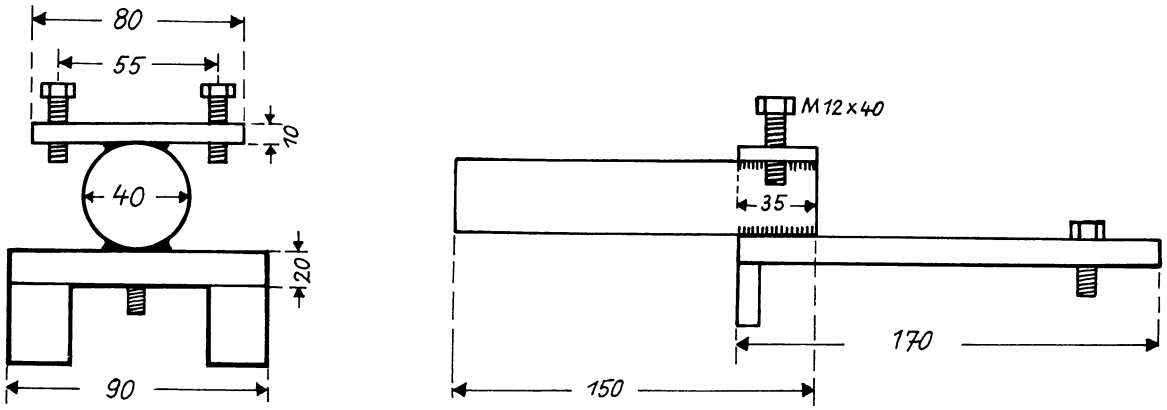

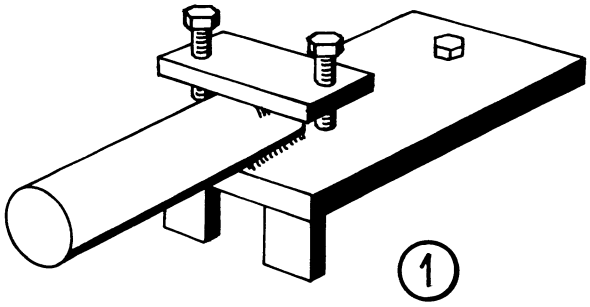

CLAMP — FINAL DRIVE UNIT

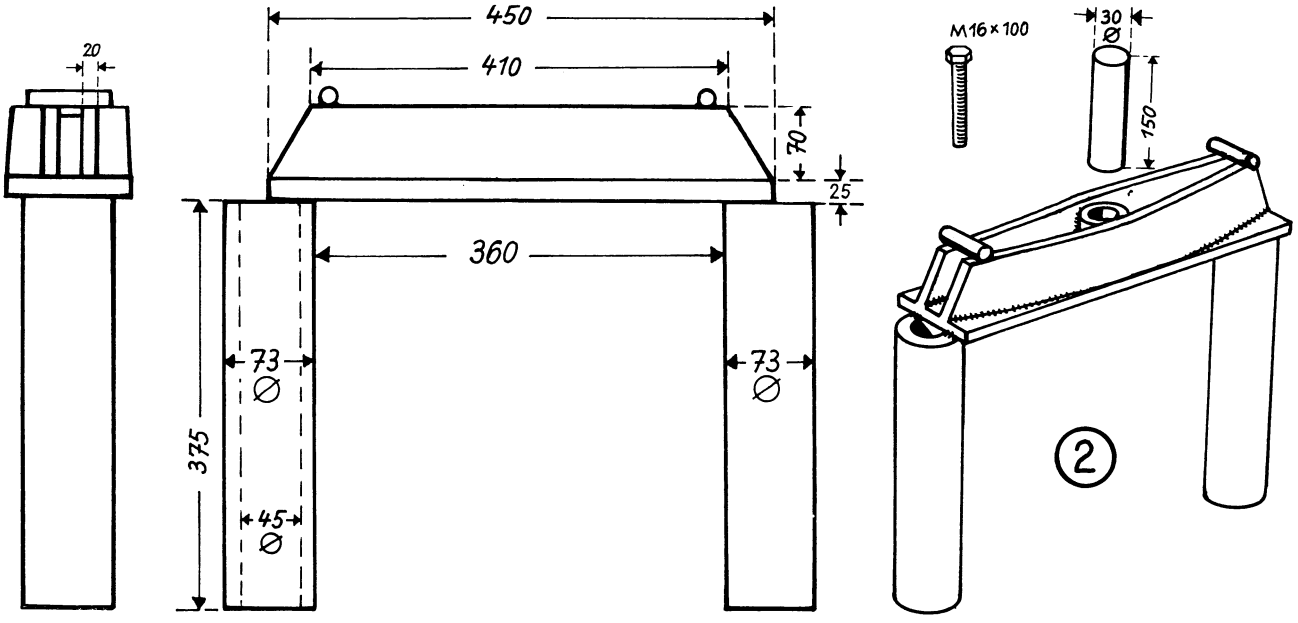

EXTRACTOR — FINAL DRIVE GEAR

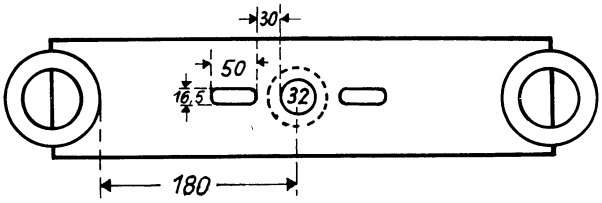

ALL DIMENSIONS IN MILLIMETRES

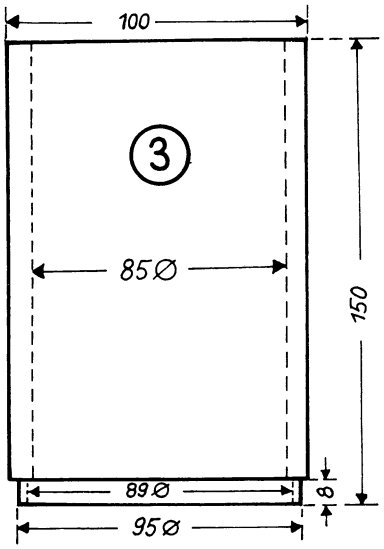

REPLACER — FINAL DRIVESHAFT OIL SEAL

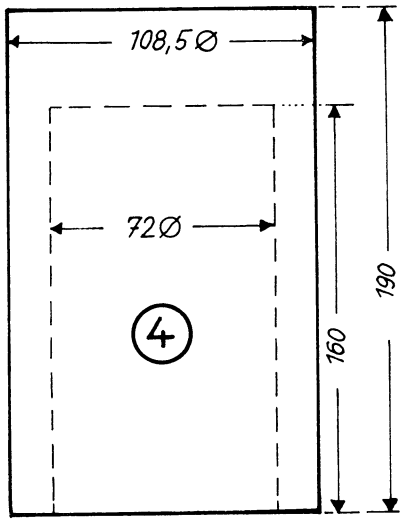

REPLACER — FINAL DRIVE GEAR

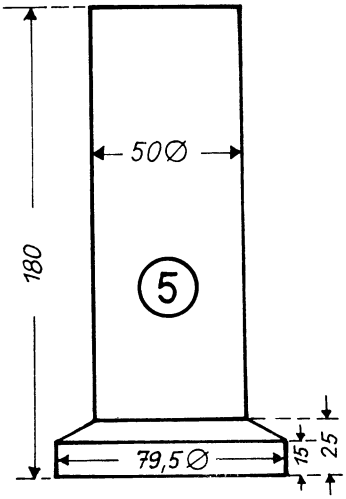

REPLACER — HALF-SHAFT OUTER BEARING

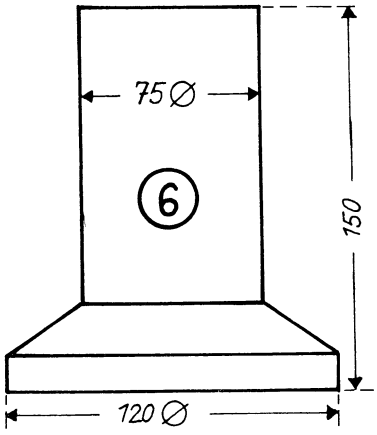

REPLACER — FINAL DRIVESHAFT BEARING

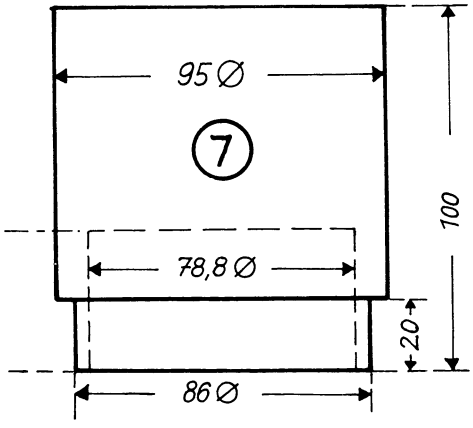

REPLACER — HALF-SHAFT OIL SEAL

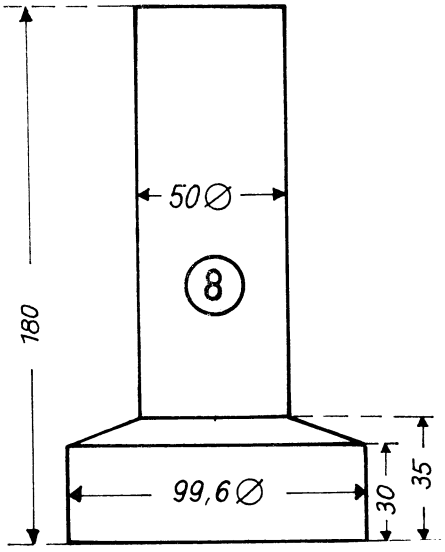

REPLACER — OUTER SHAFT BEARING

ALL DIMENSIONS IN MILLIMETRES

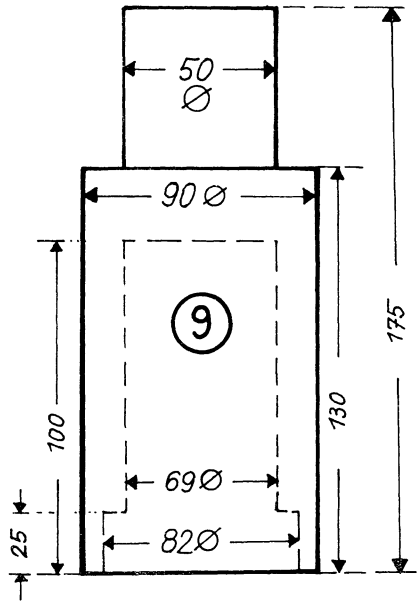

REPLACER — HALF-SHAFT CENTRE BEARING

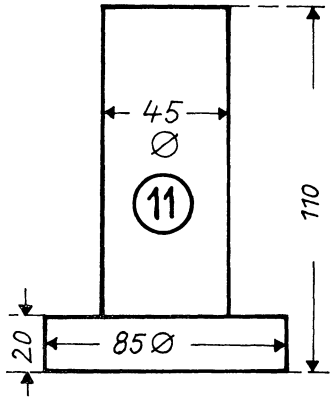

REPLACER — FINAL DRIVESHAFT INNER BEARING

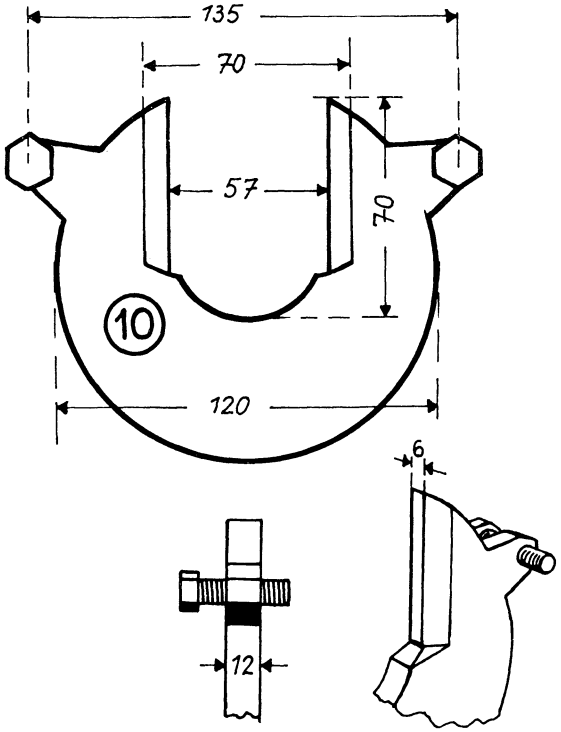

CLAMP — HALF-SHAFT

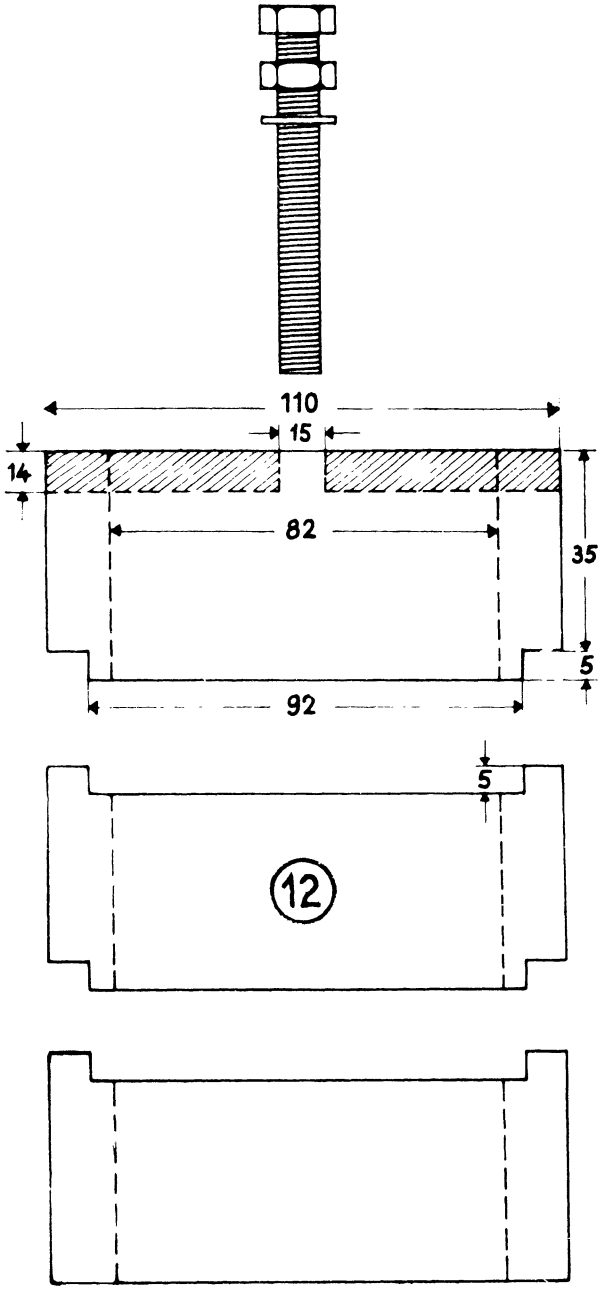

EXTRACTOR — KING PIN

ALL DIMENSIONS IN MILLIMETRES

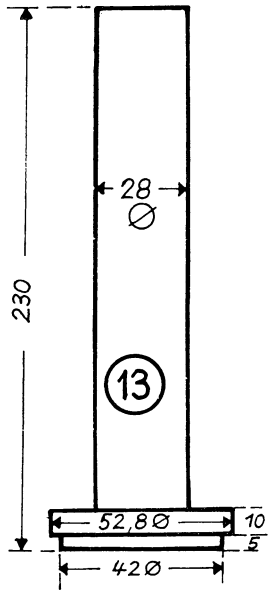

REPLACER —
HALF-SHAFT INNER BEARING

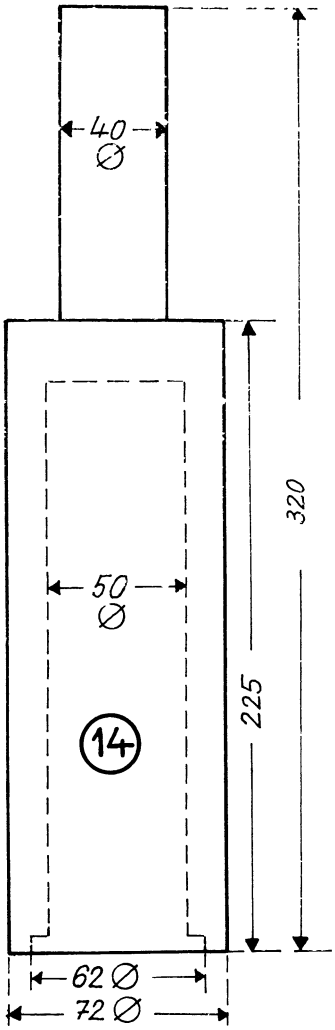

REPLACER —
KING PIN UPPER BEARING

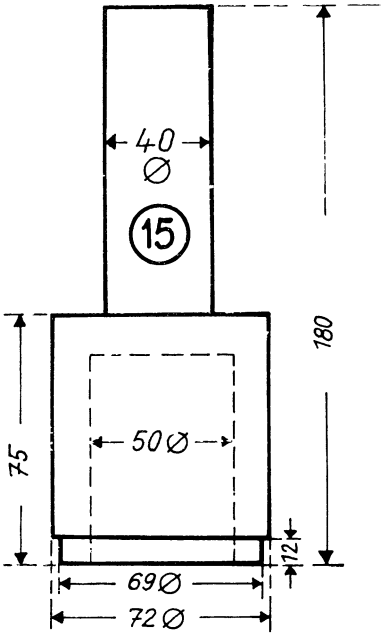

REPLACER — KING PIN LOWER BEARING

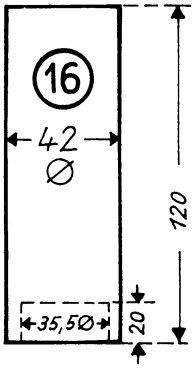

REPLACER — KING PIN BEARING

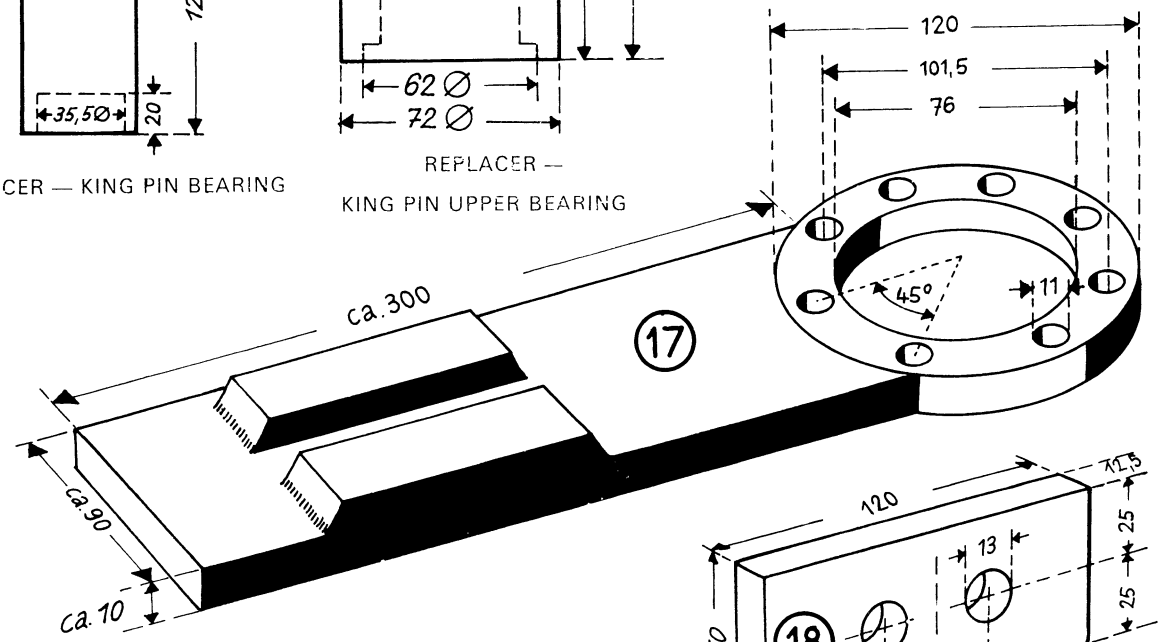

CLAMP — DRIVING FLANGE

EXTRACTOR — OUTPUT SHAFT

ALL DIMENSIONS IN MILLIMETRES

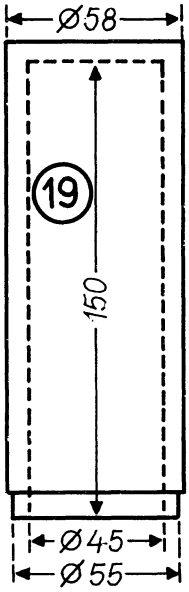

REMOVER — DRIVEN SHAFT

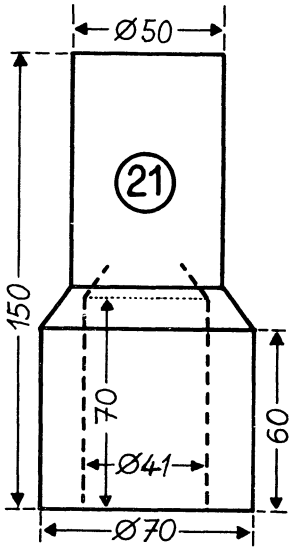

REPLACER — INTER GEAR BEARING

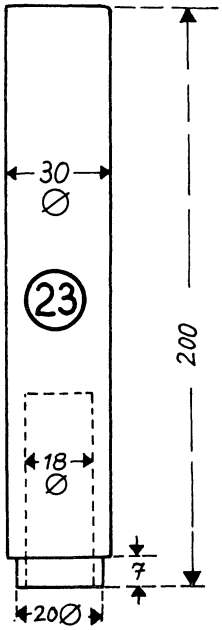

REPLACER — SELECTOR SHAFT OIL SEAL

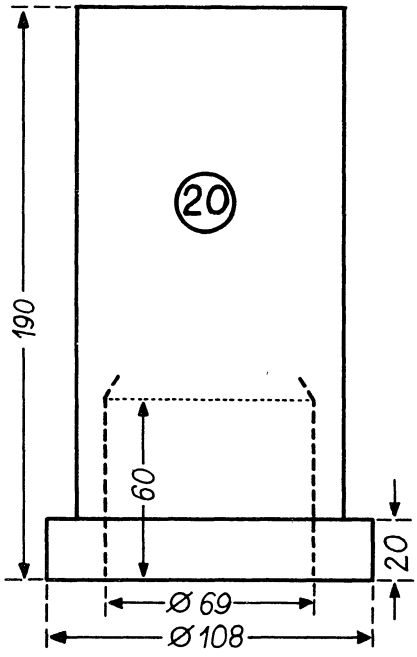

REMOVER — DIFFERENTIAL SIDE BEARING

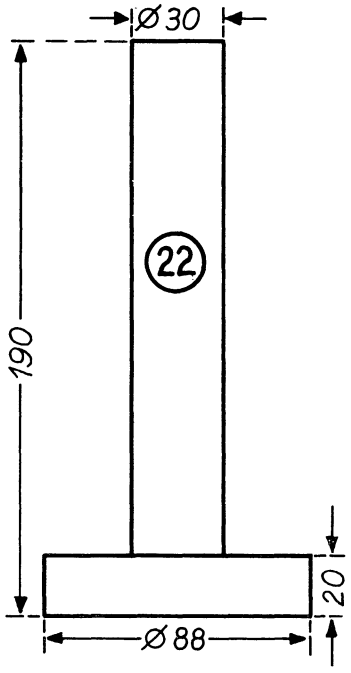

REMOVER — DRIVE GEAR

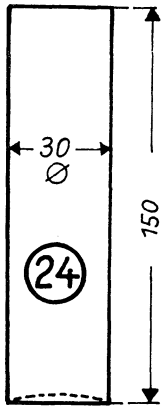

REPLACER — CORE PLUG

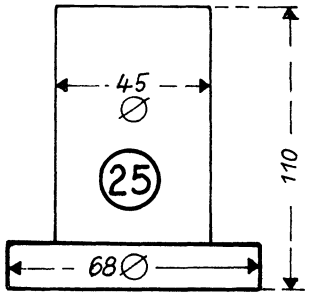

REPLACER — OUTPUT SHAFT

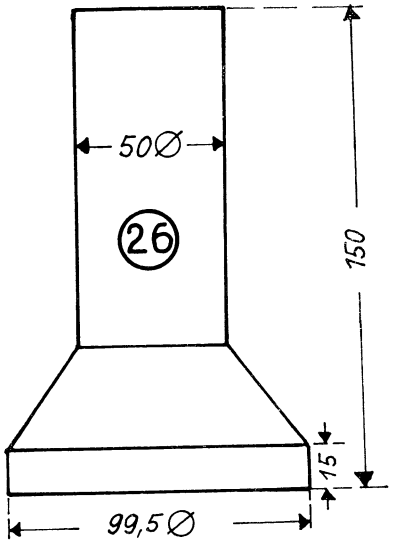

REMOVER — DIFFERENTIAL SIDE BEARING

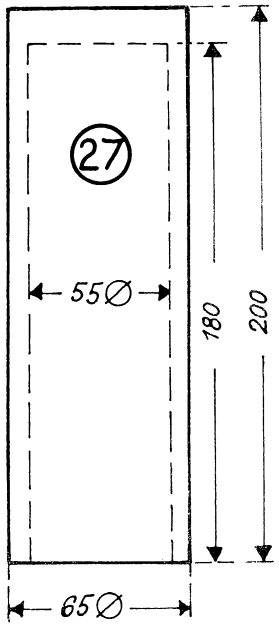

REPLACER — OUTER RING

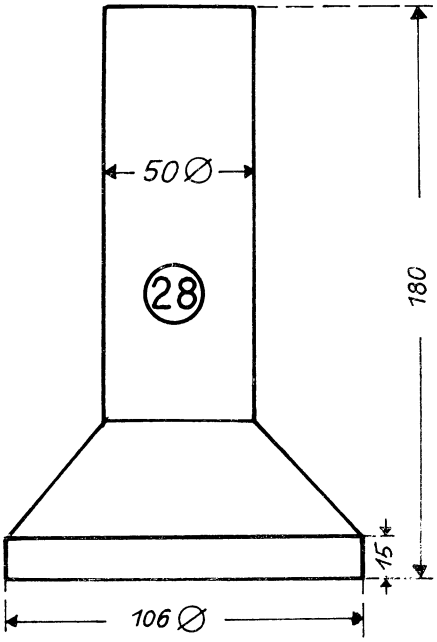

REPLACER — OUTER RING & SEAL BEARING

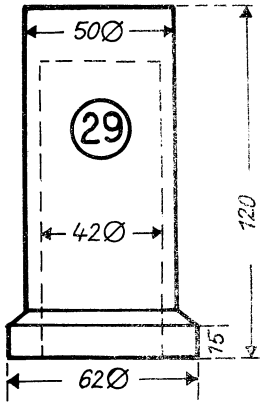

REPLACER — FLANGE

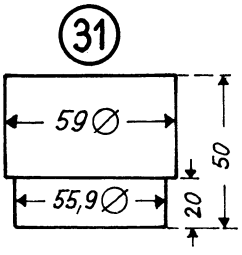

REPLACER — BUSHES

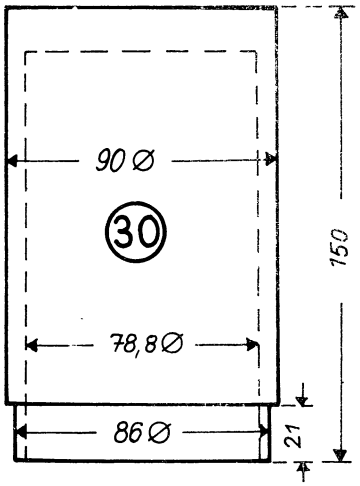

REPLACER — INNER RACE BEARING

4WD TRANSMISSION AND FRONT AXLE
Mk3 (Carraro)

Written In ***C**lear*
***A**nd*
***S**imple*
***E**nglish*

CASE CORPORATION

Pub 9-37175

PRINTED IN U S A

CONTENTS

	Page
Description	C9/1
How it works	C9/1
Removing the Axle	C9/2
Installing the Axle	C9/3
Disassembling the Axle:	
Reduction Unit	C9/4
Wheel Hubs	C9/5
Swivel Housings	C9/5
Drive shafts	C9/6
Differential	C9/7
Bevel Pinion	C9/8
Setting for the Bevel Pinion Shaft	C9/8
Setting for the Pinion Shaft Bearings	C9/9
Assembling the Axle:	
Differential	C9/10
Installing the Differential in the End Plate	C9/10
Setting for the Backlash	C9/12
Setting for the Bearing Pre-load	C9/12
Installing the Differential Unit	C9/13
Assembling the Drive Shafts	C9/13
Installing the Drive Shafts	C9/13
Installing the Swivel Housings	C9/14
Installing the Wheel Hubs	C9/15
Assembling the Reduction Unit	C9/16
Data	C9/17

David Brown procedure is one of continuing development and improvement. As a result, the specification details may have changed after this issue was made.

Also, as the David Brown Tractor is made to variable specifications for different countries and uses, this manual may give details of items which are not part of any specific tractor.

Description

The axles in this group are of the double reduction type. The main parts are as follows:

1. A differential assembly with bevel gear and pinion drive.
2. Two drive shafts with double universal joints.
3. Two steering housings held in position by four stub axles on taper roller bearings.
4. Two epicyclic reduction hubs.

How it Works:

The drive to the axle is taken from a transfer gearbox installed below the main gearbox. The dog clutch for engaging and disengaging the drive is inside the transfer gearbox. The movement of the dog clutch is controlled by a lever in the cab. A rigid propeller shaft and two splined sleeves connect the output shaft of the transfer gearbox to the bevel pinion of the axle. The bevel pinion engages in the spiral gear which is fastened to the differential casing. Inside the differential casing are four bevel pinions which are engaged in two bevel wheels. The bevel wheels are machined so that the splined ends of the drive shafts can be installed. A spur gear fitted to each end of the drive shafts engages in three planetary gears. These gears turn in housings which are fastened to the wheel hubs. The planetary gears also engage the ring gear which is fastened to the axle housing.

When the dog clutch is in the engaged position, the drive is sent through the bevel gear and differential to the spur gears on the ends of the drive shafts. As the ring gears are fastened to the axle housings and cannot move, the planetary gears turn inside the ring gears. This causes the wheel hubs to turn in the same direction as the drive shafts, but at a decreased speed.

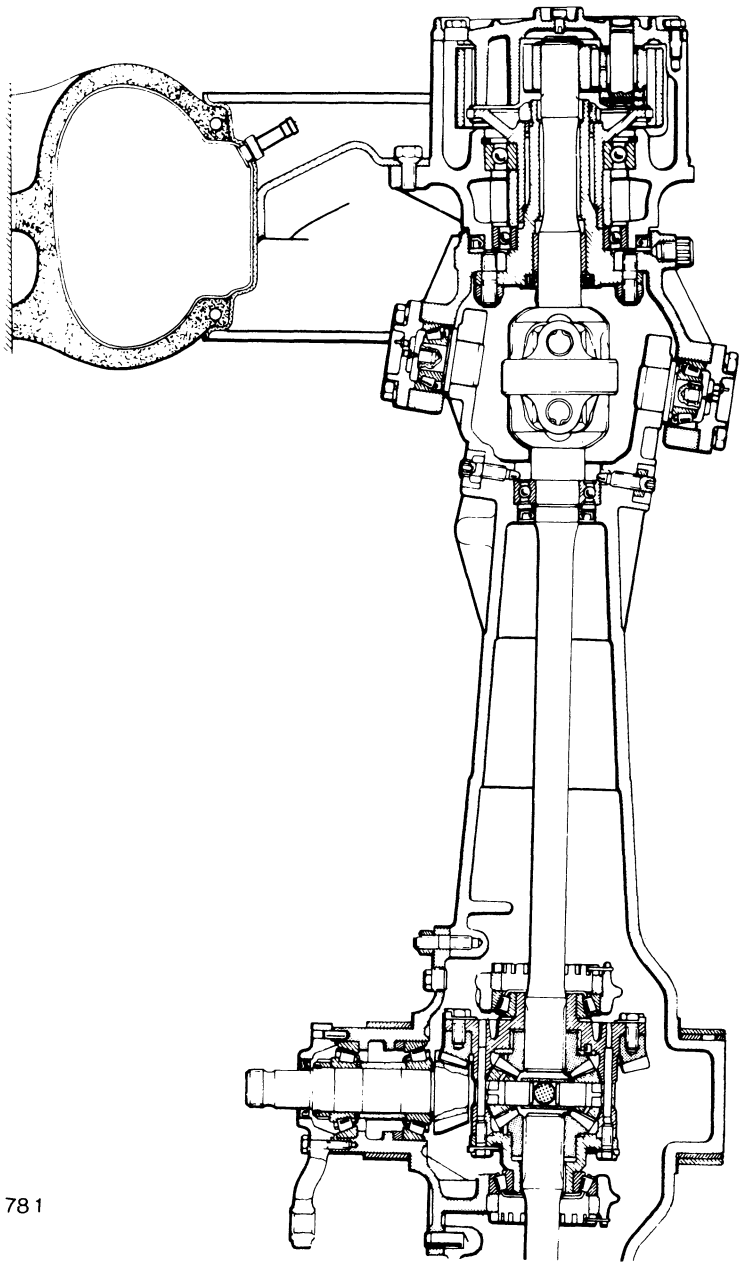

R781

Figure 1
Schematic of the Carraro Axle

Removing the Axle from the Tractor: Figures 2, 3, 4, 5.

1. Remove the propeller shaft cover A.
2. Remove the bolts which clamp the splined sleeve to the bevel pinion shaft. Push the splined sleeve away from the bevel pinion shaft. See Figure 4.
   NOTE: There is an anti-rattle spring, inside the propeller shaft which contacts the end of the bevel pinion shaft.
3. Remove the front end of the steering ram from the steering arm on the axle. Use wire to fasten the steering ram to the main frame. See Figure 5.
4. Put an acceptable jack (minimum capacity 3 tonnes) under the differential case of the front axle.
5. Loosen the front wheel nuts.
6. Raise the front of the tractor with the jack and put supports between the main frame and the ground.
7. Remove the front wheels.
8. Lower the tractor on to the supports, but keep the jack in position under the differential case to hold the axle in position.
9. Remove the front and rear caps from the axle pivot bushes.
10. Get assistance to keep the axle in position on the jack and lower the axle to the ground.
11. Use a hoist to lift the axle away from the jack.

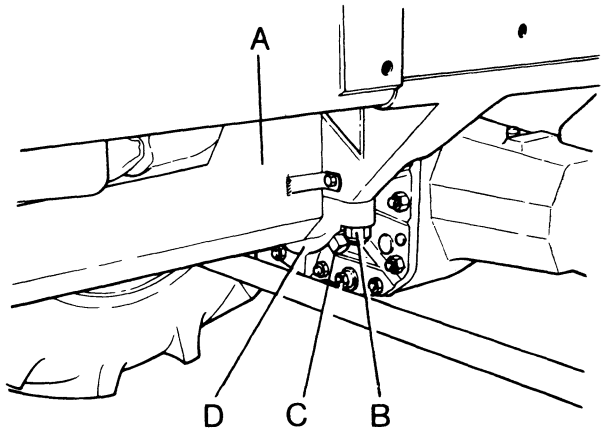

R78.2

Figure 2

A. Propeller Shaft Cover
B. Bush Cap Nuts
C. Bush Locating Adaptor
D. Rear Bush Cap

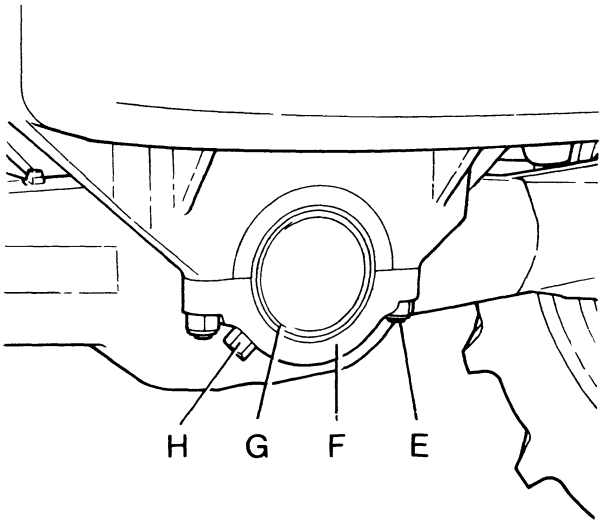

R78.3

Figure 3

E. Bush Cap Nuts
F. Front Bush Cap
G. Bush
H. Bush locating Adaptor

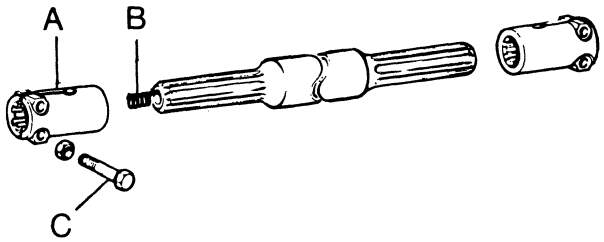

R78.4

Figure 4

A. Splined Sleeve
B. Anti-Rattle Spring
C. Clamp Bolt

Installing the Axle on the Tractor:

1. Put the anti-rattle spring in position in the propeller shaft. Use grease to keep the spring in position.
2. Use a hoist to put the axle in position on the jack.
3. Check that the pivot bushes have not been moved out of position.
   To do this, put each end cap in position under the pivot bush on the axle.
   Make sure that the locating adaptor in the end cap goes into the hole in the pivot bush.
   If necessary turn the pivot bushes so that when the axle is raised into position, the end caps are correctly aligned.
4. Get assistance to keep the axle in position on the jack and raise the axle until the pivot bushes contact the pivot housing.
5. Install the end caps.

IMPORTANT: If an end cap cannot be put in position easily DO NOT use force. Remove the locating adaptor and use a bar through the hole to align the bush. Then install the locating adaptor.

6. Tighten the end cap nuts to 230 N m (170 lb ft).
7. Align the propeller shaft sleeve with the bevel pinion shaft and move the sleeve forward until the clamp bolt can be installed.
   Tighten the clamp bolt to 57 N m (42 lb ft).
8. Install the steering ram end on to the steering arm. Tighten the nut to 140 N m (100 lb ft).
9. Install the front wheels.
10. Tighten the wheel nuts enough to keep the wheels in position.
11. Raise the front of the tractor with the jack and remove the supports.
12. Lower the tractor to the ground and remove the jack.
13. Tighten the wheel nuts to 130 N m (95 lb ft).

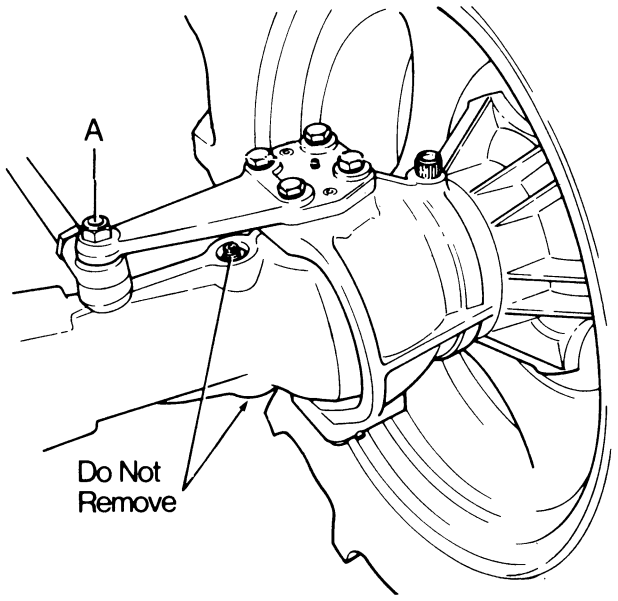

R78.5

Figure 5

A. Steering Ram End Nut

DISASSEMBLING THE AXLE

Special Tools

Before you disassemble the axle, make sure that the correct tools are available. These are as follows:

1. A tube wrench with adaptor for removing ring nuts.
2. A puller for removing the stub axles.

Disassembling the Reduction Unit: Figure 8

1. Remove the oil from the differential and front hubs. See Figures 6 and 7.
2. Remove the ten setscrews N, which fasten the cover to the hub.
3. Remove the cover K, complete with the planet pinions.
4. Use a hammer and a small punch to remove the spring pins, P.
5. Use a hammer and soft metal punch to remove the shafts L, which hold the planet pinions in position.
   NOTE: The shafts must be removed in the direction as shown, and will, when being removed, push out the core plugs, M.
6. Remove the planet pinions G, with the needle roller bearings, F.
7. Remove the thrust plates D and J, and retainers, E and H.
   NOTE: Keep the planet pinions, thrust plates and retainers together as you remove them. Do this to make sure that you install them in the correct position.

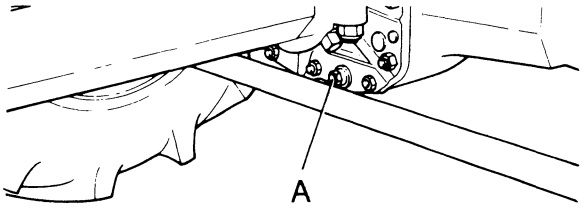

R78.6

Figure 6

A. Drain Plug

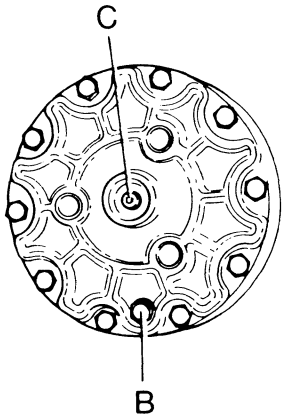

R78.7

Figure 7

B. Drain Plug
C. Level Plug

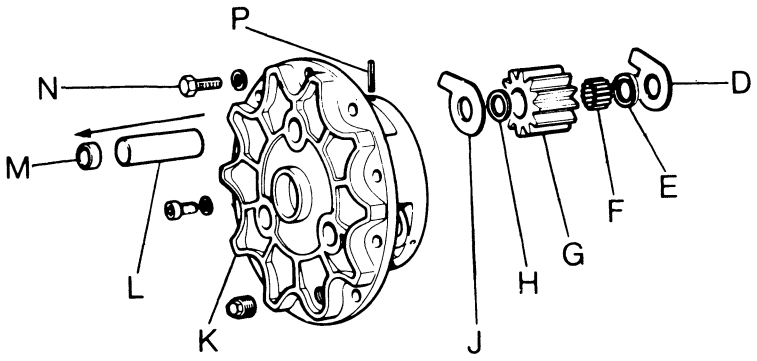

R78.8

Figure 8

Disassembling the Wheel Hubs: Figure 9

1. Use external circlip pliers to remove the circlip, M.
2. Remove the sun gear, L.
3. Use the special spanner to remove the ring nut, J. Remove the centering ring, B.
4. Remove the hub from the drive shaft.
5. Remove the circlip A, and separate the support gear H, from the internal gear, K.
6. Remove the circlip G, and the outer bearing, F.
7. Remove the bearing spacer, C.
8. Remove the inner bearing, D.

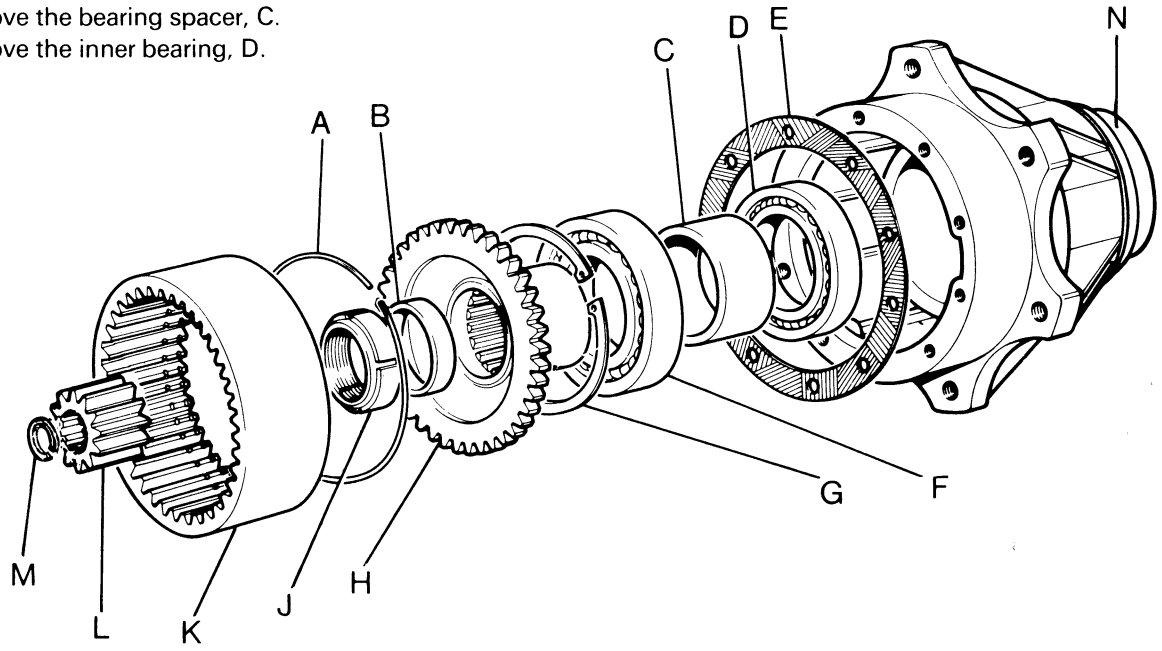

R78.9

Figure 9

Disassembling the Swivel Housings: Figure 10

1. Remove the track rod.
2. Remove the top and bottom covers D with the shims E.
   NOTE: Keep the shims with the covers to make sure that you install them in the correct position.
3. Use an acceptable puller to remove the bearing pins H complete with the seals G and bearings F.
4. Remove the swivel housing L.
5. Remove the nuts which fasten the stub axle C to the swivel housing.
6. Remove the stub axle.

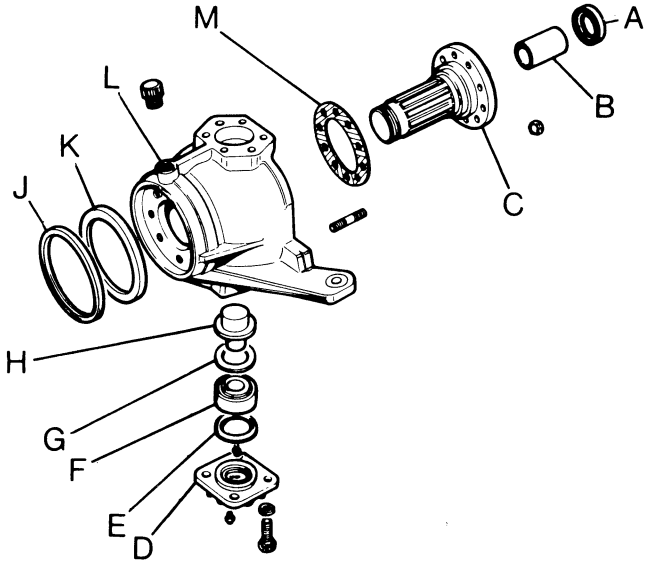

R78.10

Figure 10

Disassembling the Drive Shafts: Figure 11

1. Remove the screws A and J, which hold the support bearing in position in the axle case.
2. Pull the drive shaft out of the axle case.
3. Remove the circlip C and the support bearing K, from the drive shaft.
4. Remove the circlips E, which hold the needle roller cups G, in position in the fork end of the drive shaft, L.
5. Remove the needle roller cups and separate the spider assembly F, from the drive shaft.
6. Do the same procedure for the other fork end and the central body, H.

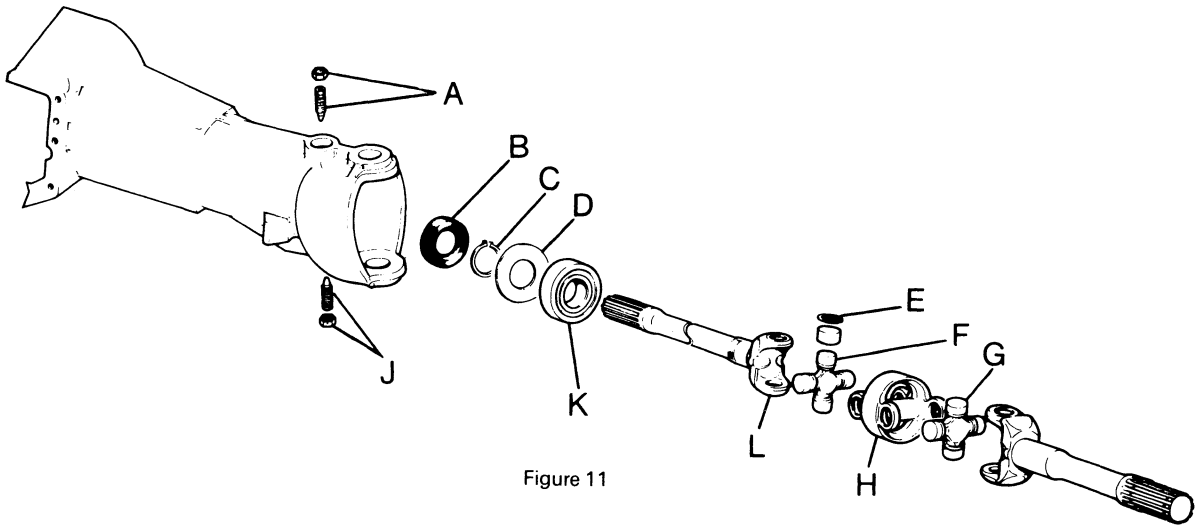

Figure 11

R78.11

Disassembling the Differential:
Figures 12 and 13

1. Remove the nuts which fasten the differential unit to the axle case.
2. Remove the differential unit.
3. Put the differential unit on an acceptable stand or in a vice.
   NOTE: If you use a vice, make sure that the vice has soft metal jaws.
4. Put a mark on the bearing caps A, and the end plate C, so that you can assemble them in the correct position.
5. Remove the nuts B, which fasten the bearing caps to the end plate.
6. Hold the spiral gear and differential cage in position. Remove the bearing caps and ring nuts, D. Remove the lock pins, M.
7. Remove the spiral gear and differential cage.
8. Remove the setscrews F, which fasten the cover to the differential cage.
9. Remove the cover, V.
10. Remove the bevel wheel, U.
11. Remove the pins H, which hold the bevel pinion shafts in position.
12. Remove the bevel pinion shafts G, the spider T, the thrust washers S, and the bevel pinions, R.
13. Remove the bevel wheel J, the thrust washer P, and the bush N.
14. Remove the setscrews L, which fasten the spiral gear to the differential cage.
15. Remove the spiral gear J.
16. Use an acceptable puller to remove the bearings E, from the cover and the differential cage.

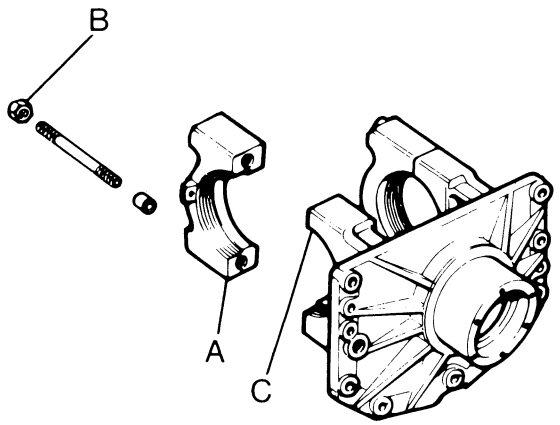

R78.12

Figure 12

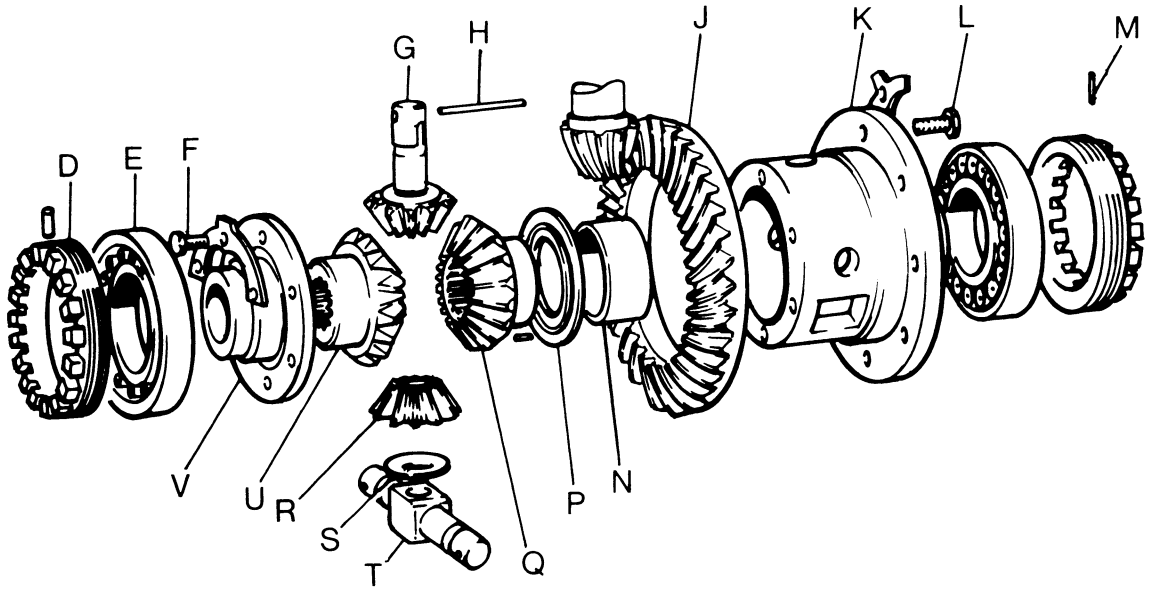

R78.13

Figure 13

Disassembling the Bevel Pinion: Figure 14

1. Remove the setscrews A, which fasten the cover B, to the end plate.
2. Remove the cover.
3. Use the special tool to remove the ring nut, L.
4. Push the splined end of the bevel pinion shaft G toward the centre of the end plate.
5. Remove the bearing cone E, the shims K, and the spacer, F.
6. Remove the bearing cone J and the shims H.
7. Remove the bearing cups from the end plate.

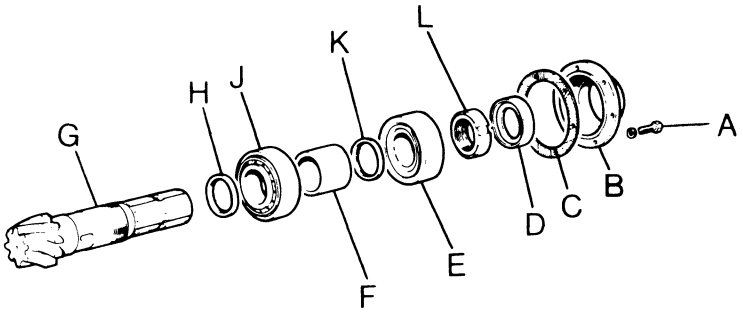

R78.14

Figure 14

Setting of the Bevel Pinion Shaft: Figure 15

Tools needed:

A 150 mm (6 in) Depth Gauge
A clamp E as shown in Figure 15.
A shaft F as shown in Figure 15.
An inside micrometer 0-150 mm (0-6 in) capacity.

Setting for the Correct Position:

1. Install the bearing cups A and B, in the end plate.
2. Install the bearing caps G and J, on the end plate.
3 Install and tighten the bearing cap nuts.
   See Figure 15 for the next operations.
4. Put the bearings cones C and D, in position.
5. Install the clamp, E.
6. Tighten the clamp nut until the bearing cones are difficult to turn. Do this job carefully or damage to the bearings could result.
7. Use the inside micrometer to measure the diameter of the bore. Make a note of this measurement (K).
8. Put the shaft F, in position with the depth gauge H, through the hole in the shaft.
9. Measure the distance between the top of the shaft and the face of the bearing cone. Make a note of this measurement (L).
10. Look at the face of the bevel pinion. Make a note of the number (N). See Figure 16.
11. It is necessary to find the pinion distance (M). To do this, make the following calculation.

$$M = L\text{-}25 \text{ (shaft diameter)} + \frac{K}{2}$$

12. To find the correct amount of shims needed, subtract the number N from M.
13. Remove the clamp and the outer bearing cone.
14. Put the correct amount of shims H, on the pinion shaft.
15. Install the pinion shaft through the inner bearing into the end plate.
16. Remove the bearing caps from the end plate.

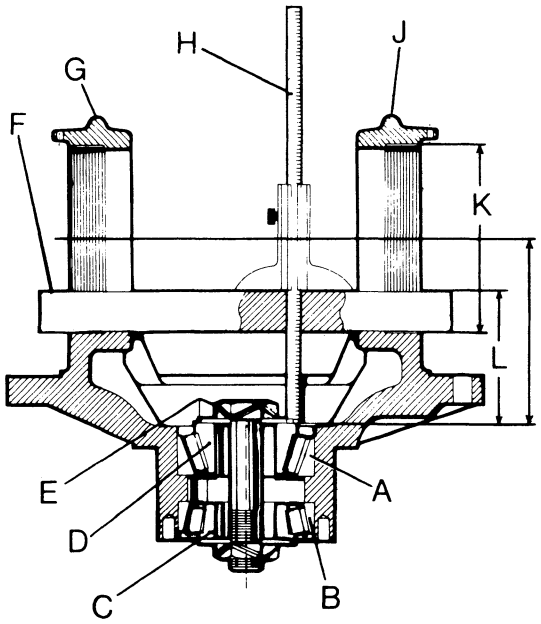

R78.15

Figure 15

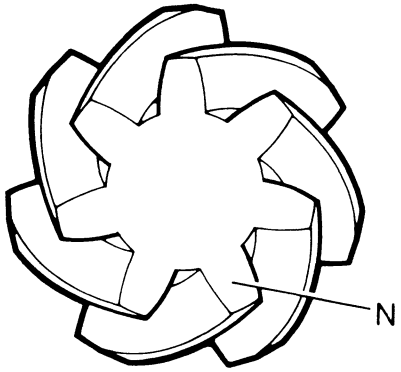

R78.16

Figure 16

Setting for the Pinion Bearings:
Figures 14, 17 and 18

Tools needed:

A dial gauge.
A small spring balance
A piece of string approximately 600 mm (24 in) long

The pinion bearings need a pre-load of 0·05 mm (0 002 in). To get this amount of pre-load do the procedure as follows:
IMPORTANT: This setting must only be made with new bearings and before the cover and oil seal are installed.

1. Put the distance piece F, on the pinion shaft.
2. Put the shims K, plus an extra shim 0·5 mm (0 020 in) thick on the pinion shaft against the distance piece.
3. Put the outer bearing cone E, on the pinion shaft.
4. Install and tighten a NEW ring nut L.
   NOTE: To tighten the ring nut to the correct torque, it is necessary to wait until the differential has been installed.
5. Put the dial gauge in a position so that the probe is against the face of the pinion. See Figure 17.
6. Move the pinion shaft backwards and forwards and measure the amount of clearance. Make a note of this figure.
   To find the correct amount of shims needed:

   EXAMPLE:

Amount of clearance	0·55 (0·022 in)
Pre-load needed	0·05 mm (0·002 in)
Amount of shims to be removed	0·060 mm (0·024 in)

7. Remove the ring nut and the outer bearing cone.
8. Remove shims of the correct amount from against the distance piece.
9. Install the outer bearing cone and the ring nut.
10. Tighten the ring nut. See NOTE for operation 4.

To check the pre-load setting, do the following procedure:

1. Make a loop in one end of the piece of string.
2. Put the other end of the string around the groove in the pinion shaft. Make two or three turns so that the string is tight on the shaft. See Figure 18.
3. Put the hook of the spring balance through the loop in the string.
4. Carefully pull the spring balance until the pinion shaft turns.
5. Look at the scale on the spring balance and make a note of the weight that is shown.
6. When the pre-load setting is correct, the weight shown will be 0·48 kg (1·051 lb).
   If the scale shows a difference from this figure it is necessary to remove or add shims between the outer bearing E, and the distance piece, F,
   NOTE: If the weight shown is too much: Add shims. If the weight shown is not enough: Remove shims.
   THIS OPERATION IS IMPORTANT.

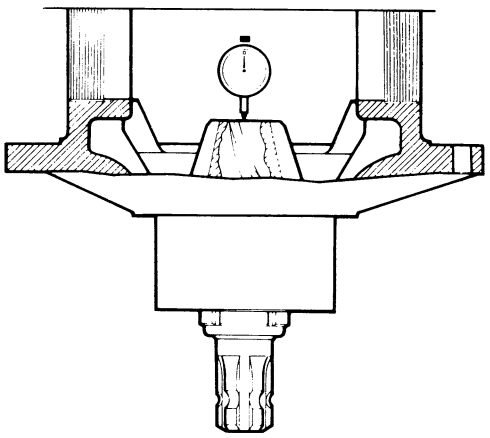

R78.17

Figure 17

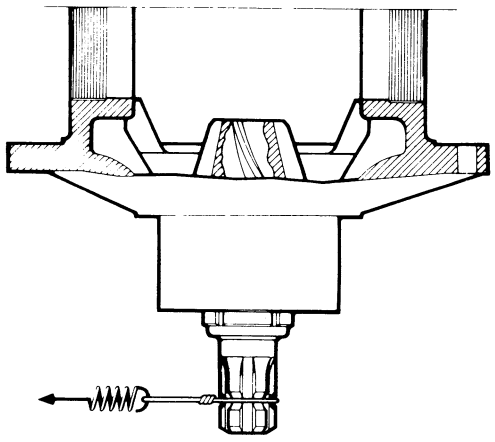

R78.18

Figure 18

ASSEMBLING THE AXLE

Assembling the Differential: Figure 21

1. Clean the faces of the spiral gear J and the differential cage, K.
2. Put the spiral gear in position on the differential cage.
3. Install the setscrews L, with new tabwashers.
4. Tighten the setscrews to 89 N m (66 lb ft). Bend the tabwashers to hold the setscrews in position.
5. Install the bush N, thrust washer P, and bevel wheel Q, in the differential cage.
6. Install the spider T, bevel pinions R, thrust washers S and bevel pinion shafts, G.
   NOTE: Install the spider first.
7. Align the holes in the spider and the bevel pinion shafts and install the pins, H.
8. Install the bevel wheel U, on the bevel pinions.
9. Install the cover, V.
10. Install the setscrews F, with new tabwashers.
11. Tighten the setscrews to 48 N m (35 lb ft).
12. Bend the tabwashers to hold the setscrews in position.
13. Install the taper roller bearings E, on the end cover V and differential cage, K.

Installing the Differential Unit in the End Plate: Figures 19 and 20.

1. Put the end plate C, on an acceptable stand or in a vice.
   NOTE: If you use a vice, make sure that the vice has soft metal jaws.
2. Put the differential unit in position in the end plate.
3. Install the bearing caps A and nuts, B.
4. Install the ring nuts.
5. Carefully tighten the bearing cap nuts.

IMPORTANT: Make sure when you tighten the bearing cap nuts that there is always a clearance between the spiral gear and the bevel pinion. Move the ring nuts if necessary to keep a clearance. If this is not done, damage can be caused to the spiral gear and pinion.

6. Tighten the bearing cap nuts to 130 N m (96 lb ft).
7. Put an acceptable piece of metal bar between the differential cage and the end plate. Make sure that the metal bar will prevent the differential cage from moving when you tighten the ring nut on the bevel pinion shaft. If necessary get assistance to hold the bar in position.

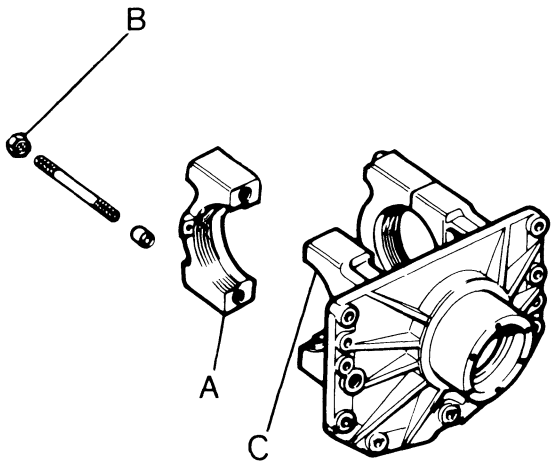

Figure 19

R78.19

8. Use the special spanner and a bar one metre (39 in) long to tighten the ring nut L, to a torque equal to 450 N m (330 lb ft).
9. Install a new oil seal D, in the cover, B.
10. Install the cover with a new gasket, C.
11. Install the setscrews A and tighten to 25 N m (18 lb ft).

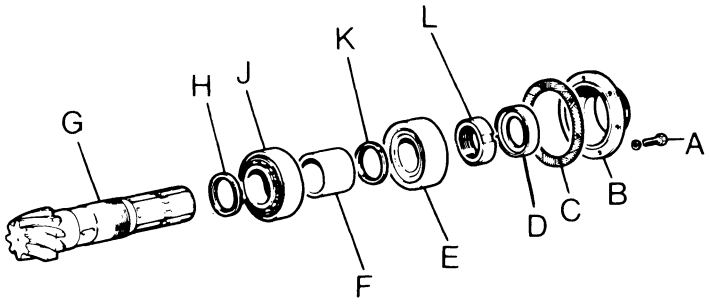

R78.20

Figure 20

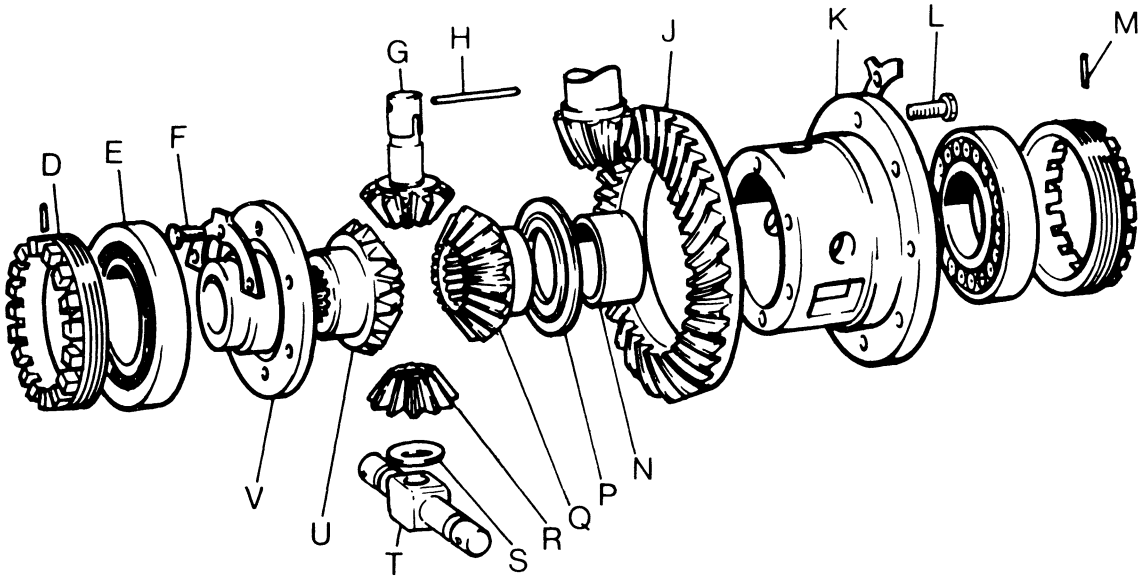

R78.21

Figure 21

Setting the Backlash: Figure 22

Tools needed: A dial gauge

The correct amount of backlash is 0·15 to 0 30 mm (0·006 to 0·012 in). The adjustment is made by turning the ring nuts. The ring nuts push against the bearings, and move the spiral gear toward or away from the bevel pinion When you make this adjustment the ring nuts can be difficult to move. It will then be necessary to loosen the bearing cap nuts a small amount. DO NOT loosen the nuts more than necessary.

Do the procedure as follows.

1. Turn the ring nut A, on the spiral gear side of the differential in a clockwise direction At the same time hit the bearing caps lightly with a soft faced hammer to align the bearings.
2. Do this until the spiral gear is in contact with the pinion.
3. Turn the other ring nut B, in a clockwise direction. At the same time hit the bearing caps lightly with a soft faced hammer to align the bearings
4. Do this until all the clearance in the bearings has been removed. This position has been reached when the ring nut becomes difficult to move.
5. Put the dial gauge in position so that the probe is in contact with, and at 90° to a tooth on the spiral gear.
6. Check the amount of backlash between the spiral gear and the bevel pinion.
7. Repeat Operation 5 and 6 on two more teeth at equal distances around the spiral gear.
8. Make a note of the clearances. If the amount of clearance is different, put the probe of the dial gauge on the tooth that has the smallest clearance.
9. Move the spiral gear toward or away from the pinion by moving each ring nut an equal amount. Do this until the dial gauge shows a clearance of 0·15 to 0·30 mm (0 006 to 0·012 in).

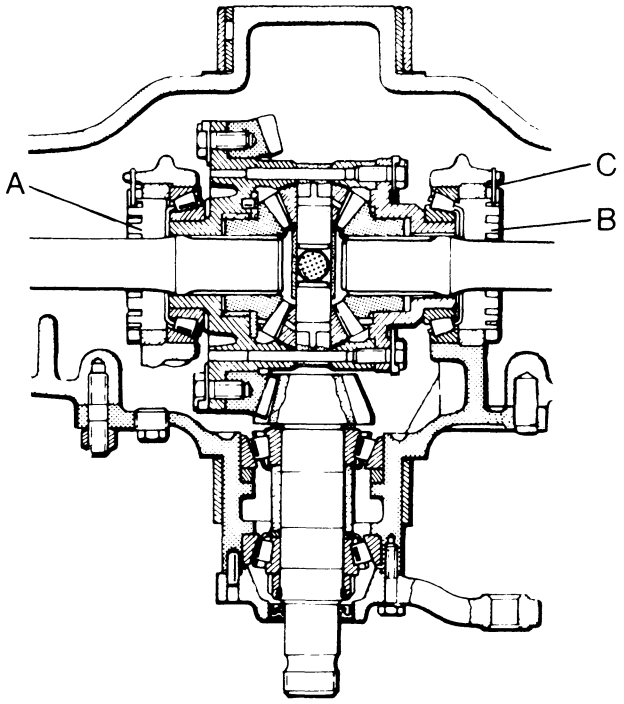

R78.22

Figure 22

Setting of the Pre-load for the Differential Bearings.

When the backlash has been adjusted, it is necessary to pre-load the differential bearings. The correct amount of pre-load is 0·08 to 0 10 mm (0·003 to 0·004 in). Because it is difficult to measure pre-load, the method used is to move each ring nut a specific amount. Do the procedure as follows:

1. Check again to make sure that the backlash setting is correct
2. Tighten each ring nut one notch.
3. Install the pins C, which prevent the ring nuts from moving.
4. Tighten the bearing cap nuts to 130 N m (96 lb ft).
5. Check again to make sure that the backlash is correct.

Installing the Differential Unit in the Axle Case: Figure 23

1 Clean the faces of the end plate and the axle case.
2 Put a new gasket A, in position on the studs of the axle case
3 Install the differential unit in the axle case.
4 Install the nuts and tighten to 87 N m (65 lb ft)

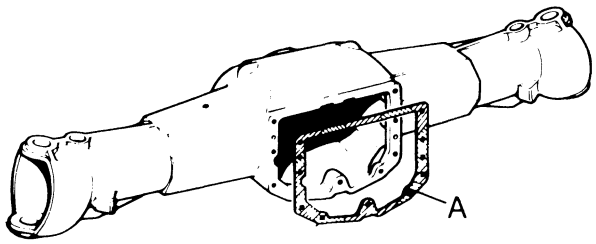

R78.23

Figure 23

Assembling the Drive Shafts: Figure 24

1 Install the two spiders F and G, on the central body, H
2 Install the needle rollers and cups.
3 Install the circlips
4 Install each fork end separately with needle rollers, cups and circlips
5 Install the bearing L, the washer D and the circlip C

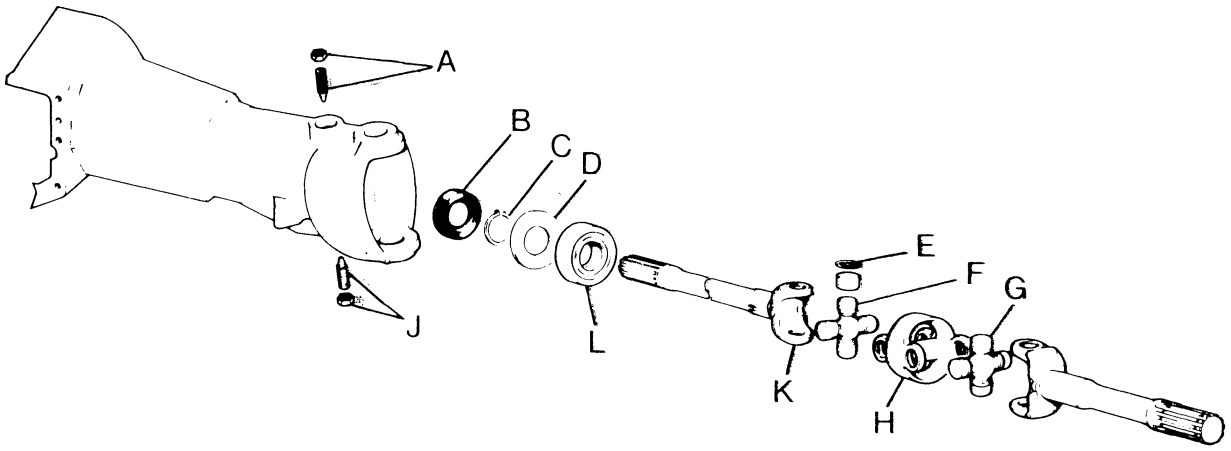

Figure 24

R78.24

Installing the Drive Shafts in the Axle Case: Figure 24

1. Before you install the drive shafts, replace the oil seals B, in the axle case
2 Put the drive shaft in the axle case with the bearing toward the differential. Put your hand inside the axle case to make a support for the fork end of the drive shaft.
3 Turn the drive shaft until the splines on the fork end engage in the splines in the differential.
4. Push the drive shaft into the axle case. Hit the end of the drive shaft with a soft faced hammer to make sure that the support bearing is in the correct position in the bearing housing.
5 Install the special screws A and J, which hold the support bearing in the axle case
6. Use a hexagon wrench to tighten the special screws.
7. Install the lock nuts and tighten to 180 N m (130 lb ft)

Installing the Swivel Housings: Figure 25

1. Make an inspection of the bush B, in the stub axle for wear or damage. If necessary replace the bush.
2. Replace the oil seal A, in the stub axle.
3. Put a new gasket M, in position on the studs inside the swivel housing.
4. Install the stub axle C and the nuts.
5. Tighten the nuts to 130 N m (96 lb ft).
6. Replace the oil seal K, in the swivel housing.
7. Get assistance to hold the swivel housing in position on the axle case.
8. Install as a unit the bearing shafts, the oil seal and the bearings F, G and H.
   Use a hammer and a soft metal punch to put the bearing shafts in the holes in the axle case.

IMPORTANT: When you do this job, be careful not to cause damage to the hole with a thread in the centre of the bearing shafts.

Setting for the Bearing Clearance:

The correct setting for the swivel bearings is zero. (No clearance, no pre-load). It is made by adding or removing shims E, between the bearing cups F and the covers, D. Do the procedure as follows:

1. Install the bottom cover D, with no shims.
   Install the setscrews and tighten to 130 N m (96 lb ft)
2. Take all the shims that were removed from both covers. Add to these shims another shim 0·5 mm (0·020 in) in thickness.
3. Put all the shims in position on the top bearing cup.
4. Put the top cover in position.
5. Install the setscrews. Tighten the setscrews evenly to 20 N m (15 lb ft).
6. Use a feeler gauge to measure the gap between the cover and the face of the swivel housing. Make a note of this measurement (A).
7. Remove the top cover and ALL the shims.
8. Use a micrometer to measure the total thickness of ALL the shims.
   Make a note of this measurement (B).

To find the TOTAL thickness of shims needed:

EXAMPLE:

Measurement of shims (B)	0·80 mm (0·032 in)
Minus (–) measurement of gap A	0·30 mm (0·012 in)
TOTAL shims needed	0·50 mm (0·020 in)

To hold the swivel housing in the correct position in the axle case, an equal amount of shims must be installed under each cover.
Using the example, the amount of shims needed under EACH cover is:

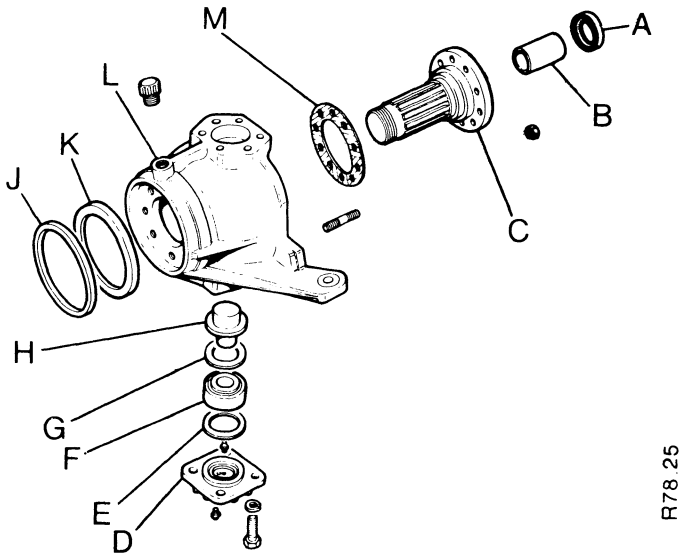

Figure 25

TOTAL shims needed 0 50 mm (0 020 in).
Shims needed under each cover $\frac{0{\cdot}50 \text{ mm } (0{\cdot}020 \text{ in})}{2}$
= 0 25 mm (0 010 in)

9. Remove the bottom cover, put the correct amount of shims in position on the bearing cup and install the cover
10. Install the setscrews and tighten to 130 N m (96 lb ft).
11. Put the correct amount of shims on the top bearing cup and install the cover
12. Install the setscrews and tighten to 130 N m (96 lb ft).
13. When you have installed both swivel housings, install the track rod.

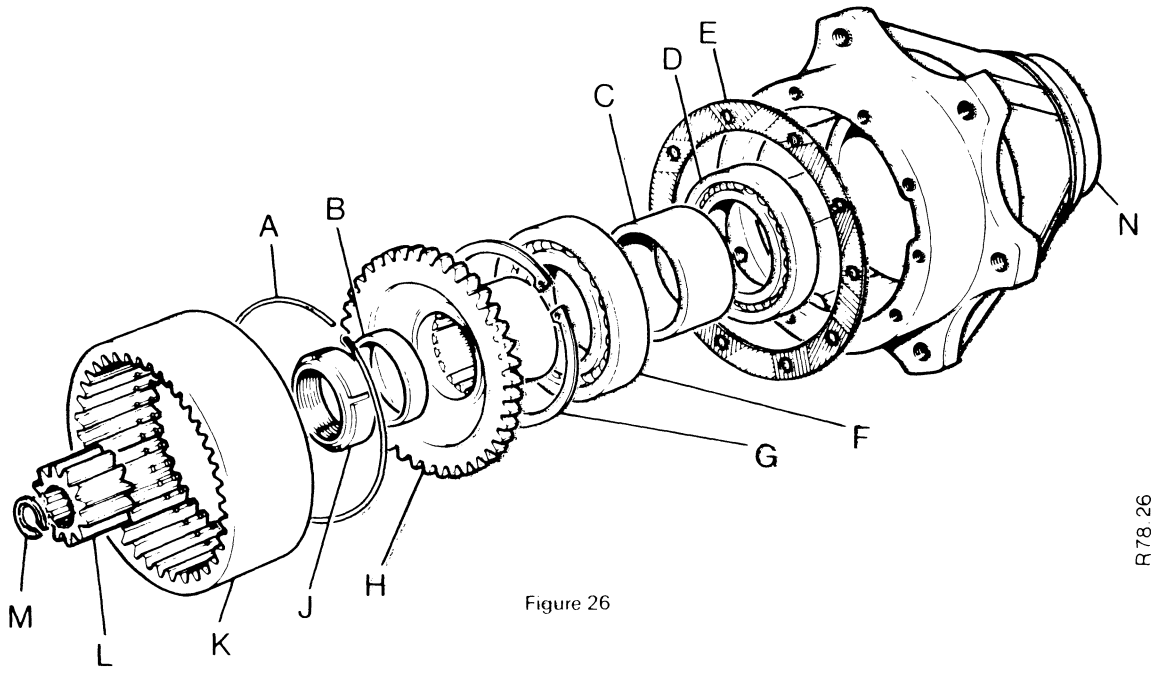

Figure 26

Installing the Wheel Hubs: Figure 26

1. Put the support gear H, in the internal gear K, install the circlips, A
2. Install the outer bearing F and the circlip G in the hub.
3. Install the spacer C and the inner bearing, D.
4. Put a new dirt excluder on the inner face of the hub, N.
5. Put the internal gear unit in the hub.
6. Install the hub on the stub axle.
7. Install the centering ring B and a new ring nut, J
8. Use the special spanner and two bars one metre (39 in) long to tighten the ring nut to a torque equal to 1160 N m (850 lb ft).
9. Install the sun gear L and circlip M, on the drive shaft.

Assembling the Reduction Unit: Figure 27

Special Tools

A piece of shaft 21·6 mm (0·85 in) diameter and 35·6 mm (1·40 in) long.

1. Put the needle rollers F, in the bore of a planet pinion. Use a small amount of grease to keep the needle rollers in position.
2. Put the special shaft inside the needle rollers.
3. Put a retainer E and a thrust plate D, at each end of the planet pinion. Use a small amount of grease to keep them in position.
4. Install a planet pinion with the shaft, retainers and thrust plates in the cover.
5. Align the hole in the cover with the shaft inside the needle rollers. Align the pin hole in the shaft with the pin hole in the cover and push the pinion shaft L, through the thrust washers, the retainers and the needle rollers. If necessary use a soft faced hammer to put the shaft in position.
   When the pinion shaft is pushed in position, it will push the special shaft out of the cover.
6. Use the special shaft to install the other pinions using the same procedure.
7. When the pinion shafts are in position, install the spring pins, P.
8. Install new core plugs M, in the holes in the cover.
9. Put a new gasket on the wheel hub. Use a small amount of grease to keep the gasket in position.

IMPORTANT: Make sure that the gasket is clear of the port for oil removal in the wheel hub.

10. Align the hole for the drain plug in the cover with the port for oil removal in the wheel hub.
11. Install the cover. Install the setscrews N and tighten to 48 N m (35 lb ft).
12. Fill the hubs and the axle case to the correct level with new oil of the correct grade.
13. Tighten all the level and drain plugs.

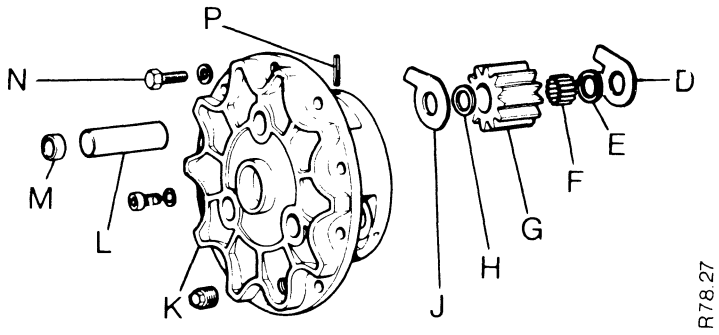

Figure 27

DATA

Spiral Gear/Pinion ratio	35/8	
Reduction	4·375:1	
Epicylcic Hub Reduction	3 666:1	
Total Axle Reduction	16·038:1	
Minimum Tread	1550 mm	61 in
Maximum Tread	1800 mm	72 in
Ground Clearance (11·2/10-24 tyres)	365 mm	14·4 in
Steering Angle	40°-2°	
Toe in (measured at the rims)	0 to 1 mm	0 to 0·04 in
Weight (approximate)	225 kg	4921 lb

Tyre arrangements

FRONT	REAR
1. 9·5/9-24	14·9/13-30
2. 11·2/10-24	12·4/11-36
3. 11·2/10-24	16·9/14-30

IMPORTANT: Do not use any other tyre arrangement or damage will be caused to the differential and transmission.

TORQUE SETTINGS

Hub cover setscrews	48 N m	35 lb ft
Hub ring nuts	1160 N m	850 lb ft
Stub axle nuts	130 N m	96 lb ft
Swivel bearing cover nuts	130 N m	96 lb ft
Special screw locknuts	180 N m	130 lb ft
Differential to axle case nuts	87 N m	65 lb ft
Differential bearing cap nuts	130 N m	96 lb ft
Differential cage setscrew	48 N m	35 lb ft
Spiral gear setscrews	89 N m	66 lb ft
Pinion shaft cover setscrews	25 N m	18 lb ft
Pinion shaft ring nut	450 N m	330 lb ft
Track rod ball joint nuts	140 N m	100 lb ft
Whell nuts	130 N m	96 lb ft

SPECIAL TOOLS

Wrench for removing and installing the pinion shaft ring nut. Tool No. 94014 Tool Extension No. 94041
Wrench for removing and installing the Hub Ring Nut. Tool No. 94017 Tool Extension No. 94042
Puller for removing the Bearing Pins from the Swivel Housings.

Hydraulic kit	No. 94098
Reducer M14	No. 99099
Reducer M16	No. 99100
Bush 65 mm	No. 94070
Bush 92 mm	No. 94071

CAPACITIES (refill)

Differential case	3·4 litres	6 pints
Reduction hubs (each)	0·85 litres	1·5 pints

LUBRICATION

COMPONENT	CAPACITY litre	CAPACITY pt	BP	CASTROL	ESSO	MOBIL	SHELL	TOTAL
DIFF HUBS (ea)	3·4 0·85	6·0 1·5	Gear Oil 90EP	Agricastrol Gear Oil EP90/140	Esso Gear Oil GP90/140	Mobilube GX90 Gear Oil	Spirax 90EP	Transmission 90
STUB AXLES PIV. BUSHES SPL. SLEEVE	Grease Fittings		Energrease Universal	L.M. Grease	Beacon 2	Mobilgrease MP	Retnax A	Multis

4WD TRANSMISSION AND FRONT AXLE
Mk4 (Case)

CASE CORPORATION

Pub 9-37185

Printed in U.S.A.

CONTENTS

	Page
INTRODUCTION	C3
SPECIAL TOOLS	C5
HOW IT WORKS	C9
MAINTENANCE	C11
TRANSFER GEARBOX	C13
DRIVE FLANGE OIL SEAL	C13
REMOVING	C14
INSTALLING	C14
DISASSEMBLING	C15
ASSEMBLING	C17
AXLE TO TRANSFER GEARBOX DRIVE SHAFT	C18
FRONT DRIVE AXLE	
DRIVE FLANGE OIL SEAL	C19
REMOVING THE AXLE	C20
INSTALLING THE AXLE	C21
DISASSEMBLY AND ASSEMBLY	C22
Reduction gears	C22
Hubs	C23
Stub axles	C25
Drive shafts	C27
Differential	C28
Steering ram	C35
SPECIFICATIONS	C39

INTRODUCTION

The information in this manual is for the repair of the David Brown Mk 4 front drive axle, and the transfer gearbox.

It also tells you how it works and gives regular lubrication procedures.

For information on parts, see publication 9-39021.

For information on other four wheel drive systems, see the following publications or revisions of these:

		Parts	Repair
Mk 1	Selene	—	Section C2
Mk 2	Kramer for 12 series tractors	9-39051	Section C7
	for 14 series tractors	9-39102	Section C7
Mk 3	Carraro	9-39021	Section C9

SPECIAL TOOLS

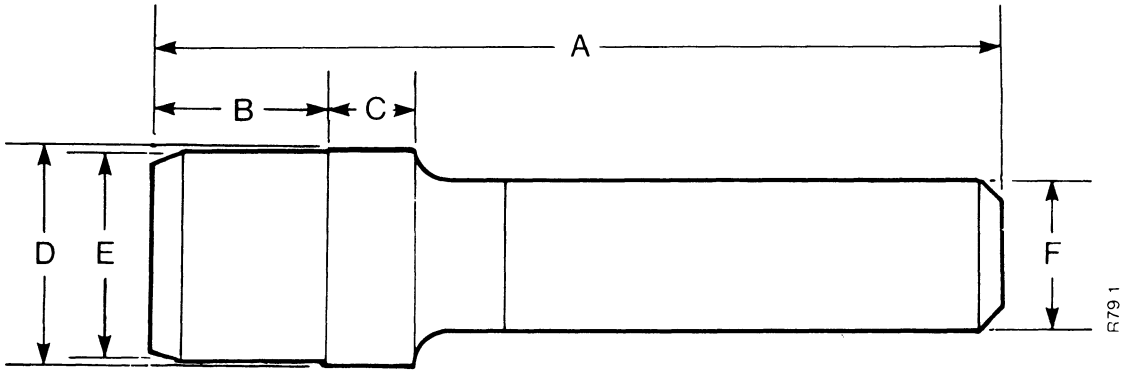

FIGURE 1. TOOL FOR REMOVING BUSHES FROM AXLE AND HUB

A. 184 mm (7¼ in)
B. 38 mm (1½ in)
C. 19 mm (¾ in)
D. 46·03 to 45·96 mm (1·8125 to 1·8095 in)
E. 44·45 to 44·46 mm (1·750 to 1·7505 in)
F. 32 mm (1¼ in), diameter

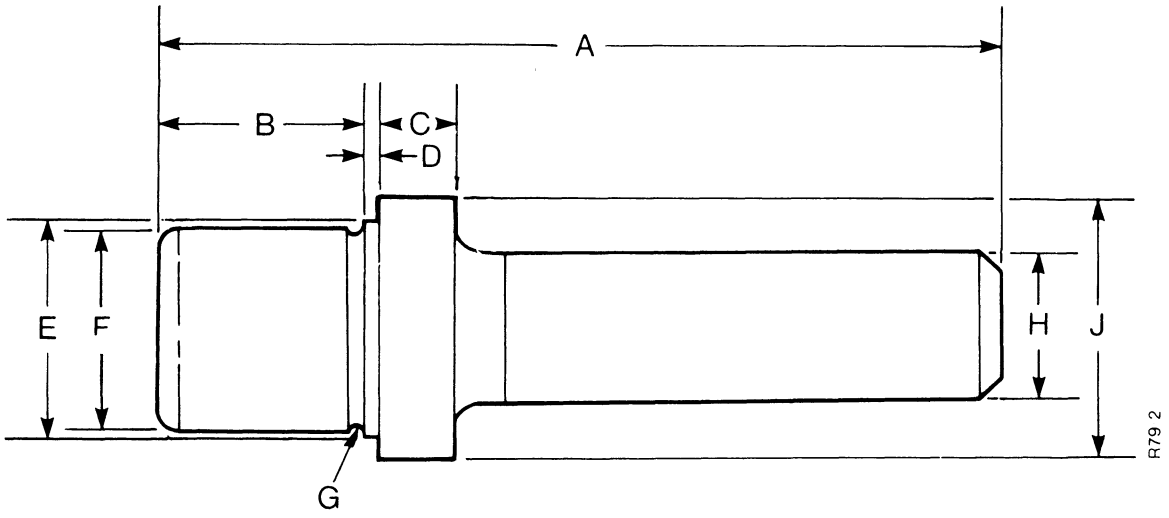

FIGURE 2. TOOL FOR INSTALLING AXLE AND HUB BUSHES

A. 181 mm (7⅛ in)
B. 44·4 mm (1¾ in)
C. 16 mm (⅝ in)
D. 2·4 mm (3/32 in)
E. 46·82 mm (1 27/32 in)
F. 44·45 to 44·46 mm (1·750 to 1·7505 in)
G. 1·5 mm (1/16 in), radius
H. 32 mm (1¼ in), diameter
J. 63·5 mm (2½ in), diameter

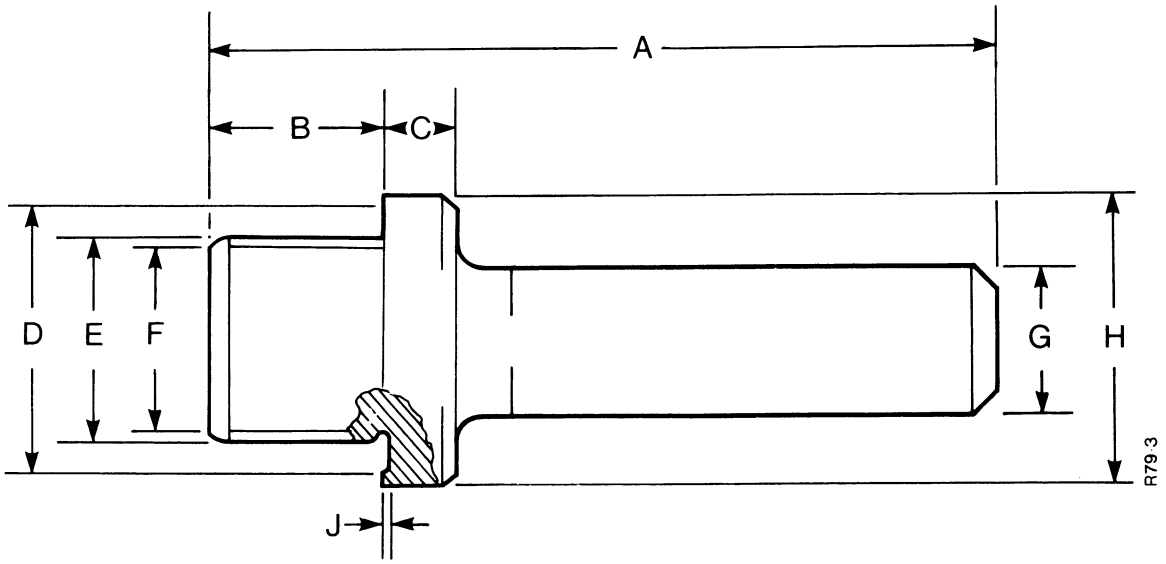

FIGURE 3. TOOL FOR INSTALLING OIL SEALS FOR DRIVE SHAFTS

A. 171 mm (6¾ in)
B. 38 mm (1½ in)
C. 16 mm (⅝ in)
D. 57·94 mm (2 9/32 in), diameter
E. 44·4 mm (1¾ in), diameter
F. 41·4 mm (1⅝ in), diameter
G. 32 mm (1¼ in), diameter
H. 62·5 mm (2 15/32 in), diameter

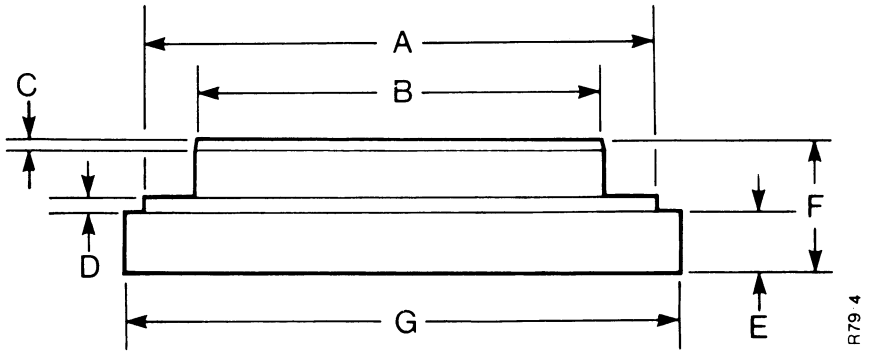

FIGURE 4. TOOL FOR INSTALLING HUB OIL SEAL

A. 110·42 mm (4⅜ in)
B. 88·1 mm (3 15/16 in)
C. 2·4 mm (3/32 in)
D. 4·7 mm (3/16 in)
E. 11 mm (7/16 in)
F. 28·5 mm (1⅛ in)
G. 120·6 mm (4¾ in)

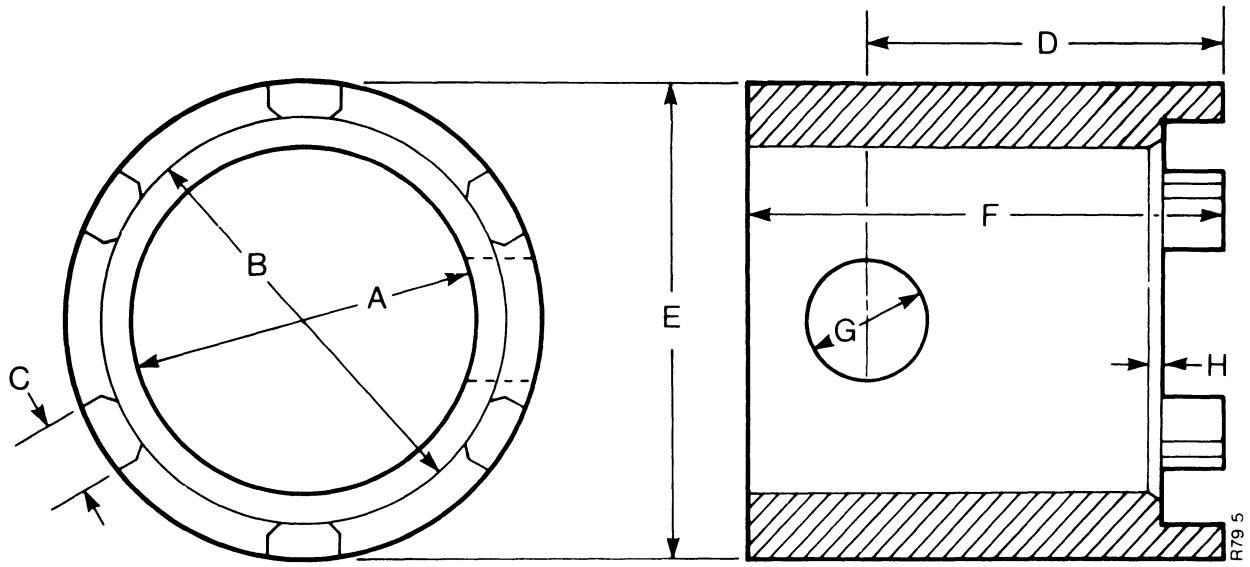

FIGURE 5. SPANNER FOR HUB RING NUT

A. 77·8 mm (3 1/16 in), diameter
B. 88·9 mm (3 1/2 in), diameter
C. 15·8 mm (5/8 in)
D. 76·2 mm (3 in)
E. 101·6 mm (4 in), diameter
F. 101·6 mm (4 in)
G. 25·4 mm (1 in), diameter
H. 2·36 mm (3/32 in)

NOTE: Use Churchill tool DB 1008A, which has a 3/4 in square drive, if available.

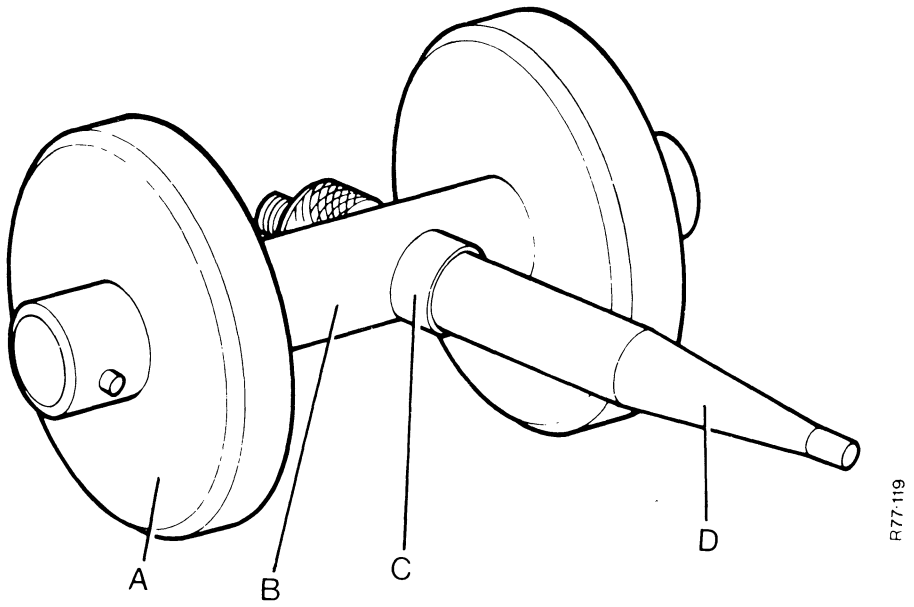

FIGURE 6. TOOL FOR SETTING BEVEL PINION SHAFT (Service Tool DB 8208)

A. Disc
B. Shaft
C. Spacer
D. Probe, DB 9721A

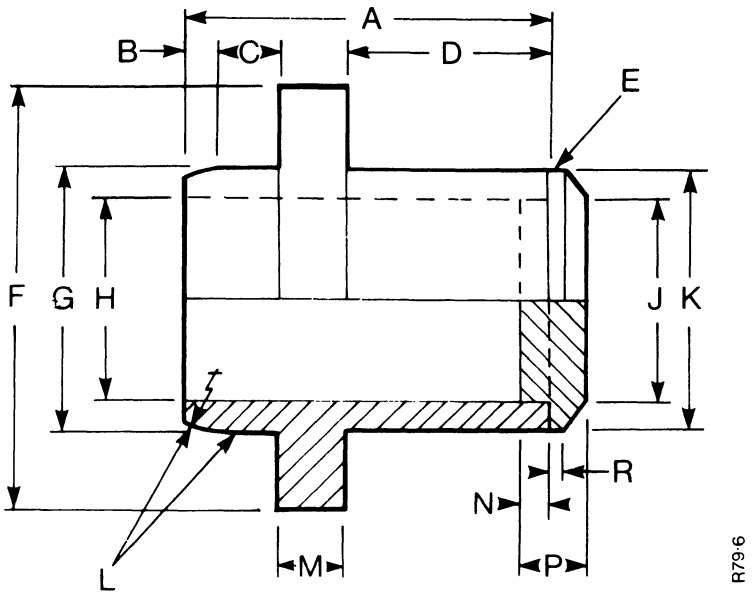

FIGURE 7. TOOL FOR INSTALLING DRIVE FLANGE OIL SEAL

A. 68 mm (2 11/16 in)
B. 6 mm (1/4 in)
C. 11 mm (7/16 in)
D. 38 mm (1 1/2 in)
E. Welded joint
F. 78 mm (3 1/16 in), diameter
G. 49·7 mm ±0·05 mm (1·965 in ±0·002 in)
H. & J. 38 mm (1 1/2 in) diameter
K. 50 mm (2 in) diameter
L. 9 mm (3/8 in) radius
M. 13 mm (1/2 in)
N. 4·5 mm (3/16 in)
P. 13 mm (1/2 in)
R. 3 mm (1/8 in)

NOTE: The surface at 'L' must be very smooth with no tool marks or scratches.

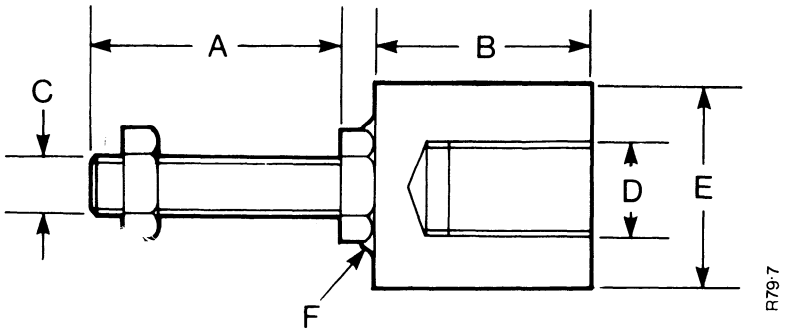

FIGURE 8. TOOL FOR REMOVING CUPS OF DRIVE SHAFT UNIVERSAL JOINTS

A. 25 mm (0·98 in)
B. 25·4 mm (1 in)
C. 8 in × 1 thread
D. Thread same size as slide hammer
E. 25·4 mm (1 in) diameter
F. Welded joint

HOW IT WORKS

The drive for the front axle is taken from the gearbox bevel pinion shaft. A transfer gearbox is installed under the main frame, forward of the gearbox. The front of the bevel pinion shaft is connected to the input shaft of the transfer gearbox. A muff coupling is used for this purpose.

The transfer gearbox has a vertical drive train of three gears. The top gear is fastened to the input shaft by splines. The top gear is permanently engaged with the idler gear which is engaged with the output gear. The output gear rotates on the output shaft on six bearing pads, made of phosphor-bronze, installed in between the splines.

When 4-wheel drive is selected, the bottom gear is connected to the output shaft by a dog clutch. The dog clutch is operated by a cable.

The output shaft of the transfer gearbox is connected to the front axle by a drive shaft. The shaft is designed to connect components which are not aligned. The drive shaft has a universal joint at each end. One universal joint is on a splined sliding coupling to give a variable shaft length as the front axle tilts. The shaft is connected to the bevel pinion of the front axle differential.

The bevel pinion is engaged with the spiral gear (crown wheel). The spiral gear is fastened to the differential cage. Inside the cage are two bevel gears on a shaft which is fitted to the cage. The complete assembly rotates. The two bevel gears are engaged with two bevel wheels. The bevel wheels are fitted on splines at the inner end of each drive shaft. The drive shafts run in bushes pressed into the axle casing. Each drive shaft has a sun gear fitted on splines at the hub end. The sun gear is permanently engaged with three planet gears which are engaged with an annulus gear. The annulus is fitted on splines on the stub axle and held stationary. The bearing pins on which the planet gears rotate, fit into holes in the hub end plate. The other end of the pin fits into the planet carrier which is fastened to the end plate.

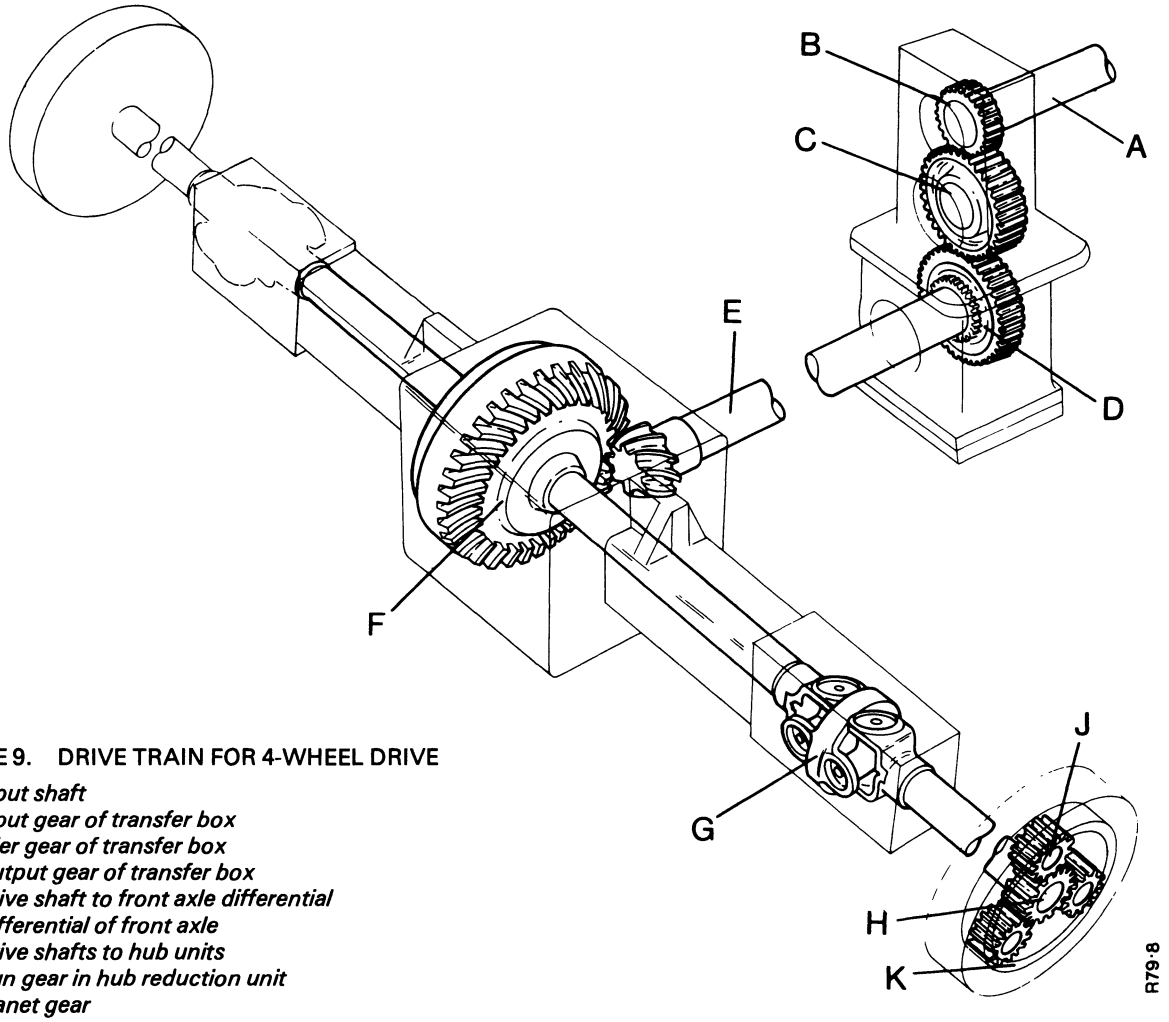

FIGURE 9. DRIVE TRAIN FOR 4-WHEEL DRIVE

A. Input shaft
B. Input gear of transfer box
C. Idler gear of transfer box
D. Output gear of transfer box
E. Drive shaft to front axle differential
F. Differential of front axle
G. Drive shafts to hub units
H. Sun gear in hub reduction unit
J. Planet gear
K. Annulus gear

When the drive shaft rotates, the sun gear rotates the planet gears inside the annulus. The planet gears move around the annulus and rotate the hub at a slower speed than the drive shafts. Approximate ratio is 3·75:1.

The stub axles are connected to the axle case by bearing pins and taper roller bearings. The drive shafts have a universal joint at the same position. This permits steering movement of the front wheels.

Operation

Never try to engage 4-wheel drive if the rear wheels have a loss of traction.

Always look for ground conditions where 4-wheel drive can be needed and engage 4WD before you reach it.

Engage 4-wheel drive when there is little or no load on the transmission.

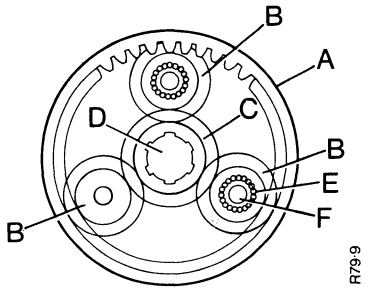

FIGURE 10. HUB REDUCTION GEARS

A. Annulus gear, (stationary)
B. Planet gears
C. Sun gear
D. Drive shaft
E. Needle roller bearing
F. Bearing pin

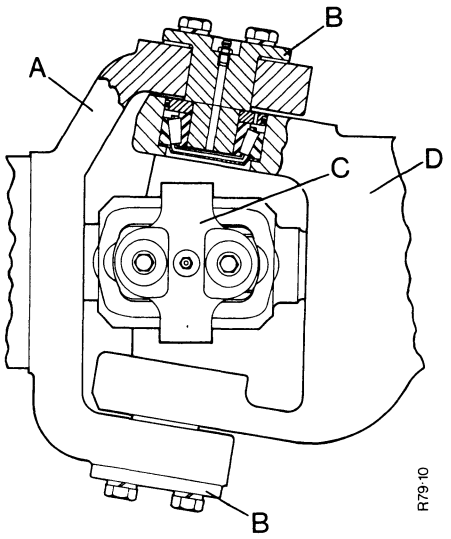

FIGURE 11. STUB AXLE AND UNIVERSAL JOINT

A. Stub axle
B. Bearing pin
C. Universal joint
D. Axle case

MAINTENANCE

TRANSFER GEARBOX

The transfer gearbox uses the same oil as the main gearbox.

Change the oil at the First Service 50/100 hours.

Check the level of the oil in the main gearbox every 60 hours.

Change the oil every 500 hours. Use a container of at least 42 litre capacity.

FRONT AXLE

If ground conditions are wet or dusty, put grease in the following grease fittings each day. See Figure 12.

(a) Swivel bearings, 4 fittings. Remove the square plug to gain access to the top fittings.

(b) Axle drive shaft, 3 fittings.

(c) Trunnion pin, 2 fittings, use SAE 90 EP Oil, not grease for these fittings.

If conditions are not wet or dusty, add grease every 60 hours to the fittings above.

NOTE: Clean all grease fittings before you put the grease gun on the fitting.

Add grease until it comes out of the gaps between components. Remove this grease.

At the First Service, 50/100 hours, change the oil in the differential and hubs as follows.

Differential:

1. Clean around the drain plug B and filler/level plug A, Figure 13.
2. Put a container of at least 8 litre capacity under the drain plug B.
3. Remove the filler/level plug A and the drain plug. Let the old oil flow into the container.
4. When the oil has stopped flowing, install and tighten the drain plug B.
5. Put new oil in through the hole for the filler/level plug. Add oil until it is level with the bottom of the hole.
6. Install the filler/level plug and tighten.

Hubs:

1. Clean area around all plugs.
2. Move the tractor until one of the plugs on each hub is at the lowest point. See D Figure 13.

   If the tractor cannot be moved use the following method.

   Use a jack to raise the front wheels clear of the ground and turn the wheels.
3. Put a 1 litre container under the lower plug D and remove plugs D and C.
4. When the oil stops flowing, install plug D and tighten.
5. Fill with new oil through the hole for plug C until level with the bottom of the hole.
6. Install the filler/level plug C and tighten.

Every 250 hours, check the level of the oil in the front hubs and the differential. See Figure 13.

Make sure the axle case breathers are free from dirt.

If dirty, remove, and clean with compressed air.

Every 500 hours, do the same as for 250 hours, plus:

Put grease through the 2 fittings at D Figure 12 until it comes out from the hub to stub axle joint.

The fitting is at the front on the left-hand stub axle and at the rear on the right-hand.

Every 1000 hours, remove the oil from the hubs and differential. Fill the hubs and differential to the correct level with the correct grade of oil.

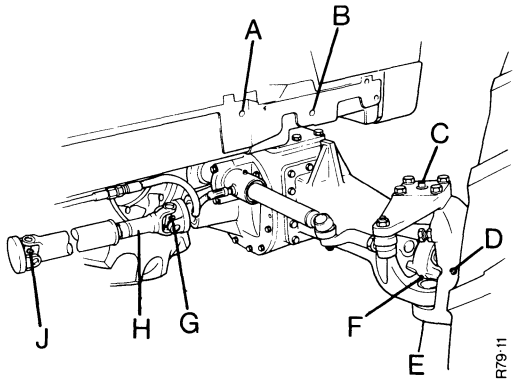

FIGURE 12. GREASE FITTINGS FRONT AXLE 4WD

A. Rear fitting for trunnion pin
B. Front fitting for trunnion pin
C. Top fitting for bearing pin (Remove access plug)
D. Stub axle fitting
E. Bottom bearing pin
F. Universal joint fitting
G. Front joint fitting
H. Sliding joint fitting
J. Rear joint fitting

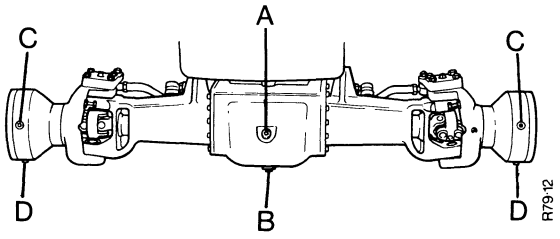

FIGURE 13. FRONT AXLE 4WD: LEVEL AND DRAIN PLUGS

A. Level plug, differential
B. Drain plug, differential
C. Level plug, hubs
D. Drain plug, hubs

1 litre = 1¾ pt = 1 U.S.qt
42 litres = 9¼ gal = 44 U.S.qt
8 litres = 14 pt = 8½ U.S.qt

TRANSFER GEARBOX

DRIVE FLANGE OIL SEAL

Replacement

1. Put a container which can hold at least 42 litres under the gearbox. Remove the drain plugs for the transmission and transfer box.
2. Install drain plugs when the oil has stopped flowing.
3. Remove the bolts which fasten the drive shaft to transfer gearbox flange and lower to the ground.
4. Engage a gear in the main gearbox and 4-wheel drive, check hand brake is fully applied.
5. Remove the flange nut, washer and cork seal from the end of the shaft.
6. Use a 3 leg puller to pull off the drive flange.
7. Remove the four setscrews holding the oil seal housing to the transfer box case. Remove the oil seal housing and the gasket.
8. Use a lever to remove the old oil seal.
9. Clean and check all parts for wear or damage, especially the oil seal location on the drive flange. Replace the drive flange if necessary.
10. Press a new seal into the housing with an oil seal replacing tool as shown in Figure 7.
11. Install the oil seal housing with a new gasket.
12. Install the drive flange with a new cork seal, washer and nut.
13. Tighten nut to 190 Nm.
14. Fasten the drive shaft to transfer gearbox flange.
15. Fill the transmission casing with oil to the correct level.

NOTE: If the old oil is used again, **do not** use the last 5 litres in the container. Add new oil to replace the last 5 litres. Make sure the container has a cover if the old oil is used.

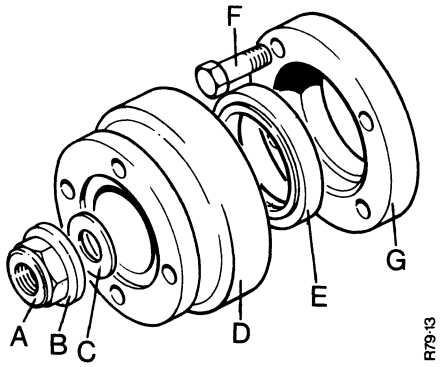

FIGURE 14. DRIVE FLANGE ASSEMBLY

A. Nut
B. Washer
C. Seal washer
D. Flange and shield
E. Oil seal
F. Bolt
G. Seal housing

190 Nm = 19·3 kg m = 140 lb ft
42 litres = 9¼ gal = 44 U.S. qt
5 litres = 8 pt = 6 U.S. qt

REMOVING THE TRANSFER GEARBOX

1. Put a container which can hold at least 42 litres under the transmission drain plugs. Remove the plugs.
2. Install the drain plugs when the oil has stopped flowing.
3. Remove the bolts which fasten the drive shaft to the transfer box. Lower the shaft to the ground.
4. If the output shaft or oil seal is to be removed, loosen the nut which fastens the flange and guard.
5. Remove the cab if fitted and remove the gearbox cover.
6. Remove the bolt which fastens the muff coupling to the bevel pinion shaft. Slide the coupling backward clear of the transfer box input shaft.
7. Put an acceptable jack under the transfer box to hold it in position.
8. Remove the nuts and bolts which fasten the transfer box to the main frame.
9. Lower the transfer box and remove to a work bench.

INSTALLING THE TRANSFER GEARBOX

1. Clean the faces of the transfer gearbox and the main frame.
2. Remove layers of the new gasket until it is the same thickness as the old gasket. Put the gasket on the transfer gearbox.
3. Put the gearbox on an acceptable jack and raise into position in the main frame. Be careful when the casing goes over the studs to prevent damage to the threads.
4. Install the nuts and bolts and tighten to 163 Nm.
5. If the drive flange nut has been removed, tighten to 190 Nm.
6. Make sure the muff coupling will slide on to the input shaft easily.
7. If it does not, then the transfer gearbox must be removed and the position adjusted up or down. This is done by removing layers of the gasket.
9. Install the coupling bolt.
10. Install the main gearbox cover.
11. Install the cab.
12. Raise the axle drive shaft into position and fasten it to the transfer gearbox output shaft. Tighten the bolts to 54 Nm.
13. Fill the transmission with the correct grade of oil to the correct level.

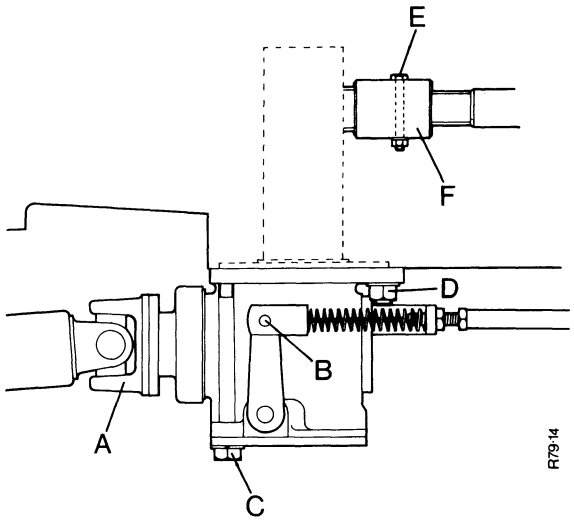

FIGURE 15. REMOVING THE TRANSFER GEARBOX

A. Drive shaft
B. Selector cable connection
C. Front bolts
D. Rear nuts
E. Bolt and nut, coupling
F. Coupling, to main gearbox

42 litres = 9½ gal = 44 U.S. qt
163 Nm = 16·6 kg m = 120 lb ft
190 Nm = 19·4 kg m = 140 lb ft
54 Nm = 5·5 kg m = 40 lb ft

DISASSEMBLY OF THE TRANSFER GEARBOX

Figure 16.

1. Remove the setscrews which fasten the end cover A for the input shaft C.
2. Remove the end cover and shims.
3. Press out the input shaft complete with taper roller bearing.
4. Remove the bearing cup which comes out with the input shaft.
5. Use a hammer and soft metal punch to remove the bearing cone from the input shaft.
6. Remove the other bearing cone and input gear B from the casing.
7. Use the hammer and soft metal punch to remove the other bearing cup from the casing.
8. Remove the setscrews which fasten the end covers F for the idler shaft H.
9. Remove the end covers and shims.
10. Press the idler shaft complete with bearing out of the casing.
11. Remove the bearing cup which comes out with the shaft.
12. Remove the idler gear and the bearing cup from the casing.
13. Use a hammer and soft metal punch to remove the bearing cone from the idler shaft.
14. Remove the setscrews which fasten the bottom cover R to the transfer box. Remove the bottom cover.
15. Remove the nut I and washers from the front of the output shaft.
16. Use a 3 leg puller to remove the drive flange K and guard.
17. Remove the setscrews which fasten the oil seal housing to the transfer gearbox. Remove the oil seal housing.
18. Remove the setscrews which fasten the rear end cover U and cable bracket V to the transfer box. Remove the shims.
19. Press the output shaft out through the rear of the transfer gearbox. Make sure the threads are protected while doing this.

    Make sure the gear is kept aligned with the shaft while pressing the shaft out.
20. Remove the six bearing pads Q from the shaft.
21. Remove the bearing cup which comes out with the output shaft.
22. Use a hammer and soft metal punch to remove the bearing cone from the shaft.
23. Remove the distance piece T.
24. Remove the output gear through the bottom of the casing.
25. Remove the fixed gear from the dog clutch.
26. Remove the dog clutch gear from the selector fork.
27. Use a hammer and punch to remove the pin which fastens the selector fork to the selector shaft Z.
28. Remove the fork and shaft.
29. Remove the special bush and bearing cone. Do not remove the cone from the bush unless a new bearing is to be fitted.
30. Use a hammer and soft metal punch to remove the bearing cup from the casing.

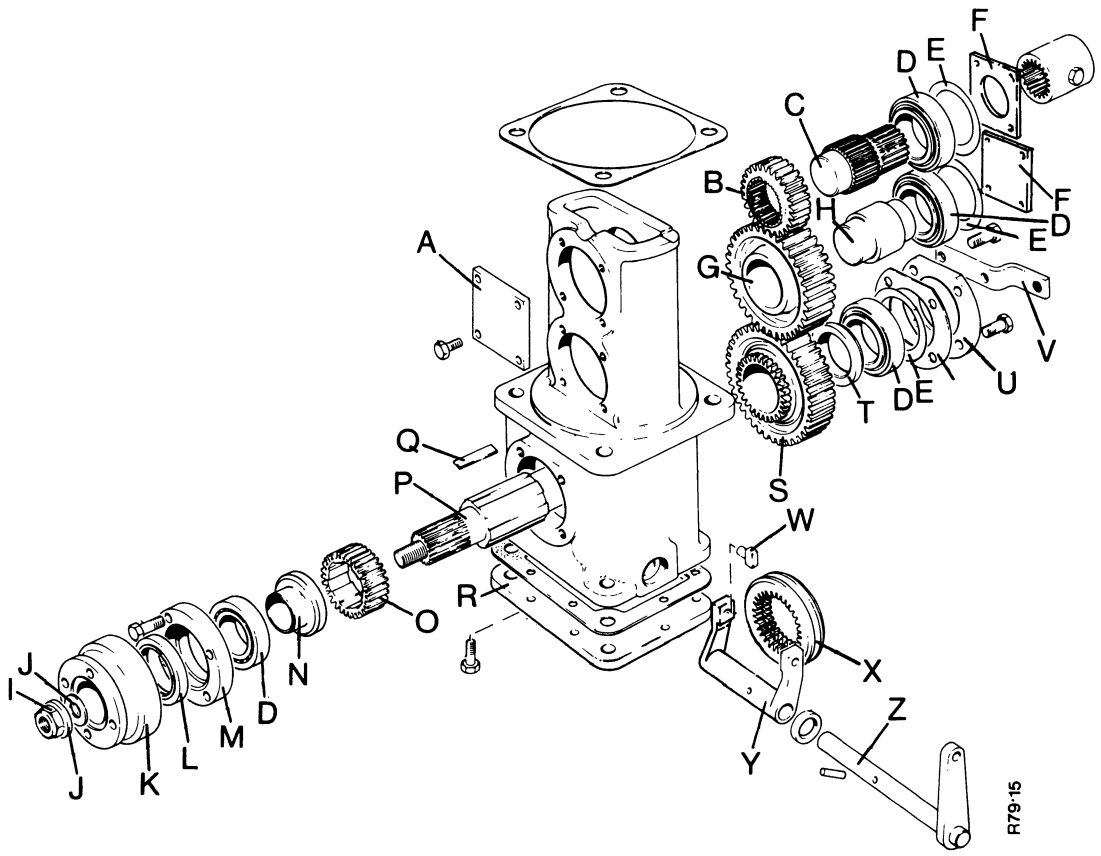

FIGURE 16. TRANSFER GEARBOX ASSEMBLY

A. Front cover, input and idler shafts
B. Input gear
C. Input shaft
D. Taper roller bearings
E. Shims
F. Rear covers
G. Idler gear
H. Idler shaft
I. Nut
J. Washers
K. Flange and shield
L. Oil seal
M. Oil seal housing
N. Bush
O. Dog gear
P. Output shaft
Q. Bearing pad (6)
R. Bottom cover
S. Output gear
T. Distance piece
U. Rear end cover
V. Cable bracket
W. Trunnion pin
X. Dog clutch
Y. Selector fork
Z. Selector shaft

ASSEMBLING THE TRANSFER GEARBOX

1. Clean all faces of the end covers, oil seal housing and transfer gearbox casing.
2. Install the front bush N Figure 16 and bearing cone on to the output shaft.
3. Enter the output shaft P through the bottom front hole of the casing.
4. Install the fixed gear O, dog clutch X and output gear S on to the output shaft through the bottom of the casing.
5. Put the front bearing cup on to the front bearing cone.
6. Install a new oil seal.
7. Put a new gasket on the seal housing M.
8. Put the seal housing in position. Install the setscrews and tighten evenly to push the front bearing cup into position. Tighten the setscrews to 27 Nm.
9. Install the six bearing pads Q into the bore of the output gear through the rear hole.
10. Install the rear spacer T and bearing cone on to the output shaft. Hold the transfer box and seal housing while pushing or pulling the bearing into position.
11. Press the rear bearing cup into the casing, rotate the shaft while doing this.
12. To find the correct amount of shims E needed for the bearing adjustment use the following procedure.
    (a) Use a depth micrometer to measure the distance between the rear bearing cup and the rear face.
    (b) Make a note of the measurement and add 0·25 mm for the gasket thickness.
    (c) Subtract 0·075 mm from the total.
    (d) Select shims to the thickness of the final result.

NOTE: The tolerance permitted is 0·05 to 0·0 mm.

13. Install the shims with a 0·75 mm shim next to the end cap.
14. Put a new gasket on the end cover U. Fasten the cover to the casing with the bottom two setscrews.
15. Fasten the cable bracket V to the end cover with the top two setscrews.
16. Tighten the four setscrews to 27 Nm.
17. Put oil on the lip of the oil seal L. Install the flange and guard K on to the output shaft. Be careful when pushing the flange through the oil seal, to prevent damage.
18. Install the washer, seal and nut on to the shaft. Tighten the nut after the transfer gearbox has been installed in the tractor.
19. Install a new selector shaft oil seal.
20. Install the selector fork Y through the bottom of the casing. Enter the trunnion pins W in the groove of the dog clutch X.
21. Remove any protrusions and put grease on the selector shaft. Push the selector shaft through the bores of the casing and the fork.
22. Install the pin which fastens the fork to the shaft. Put Loctite on a new core plug and press it into the casing, if old plug is removed.
23. Press the front bearing cup for the idler shaft H into the casing.
24. Install the front cover and tighten the setscrews to 27 Nm.
25. Press the rear bearing cone on to the idler shaft, thick edge to the shoulder.
26. Put the front bearing cone and the idler gear in position inside the casing.
27. Press the idler shaft through the gear and into the front bearing cone.
28. Press the rear bearing cup into the casing.
29. Use the same procedure to select the correct amount of shims as for the output shaft. See step 12.
30. Install the rear cover and tighten the setscrews to 27 Nm.
31. Repeat steps 23 to 30 to install the input shaft.
32. Put a new gasket on the bottom cover and fasten it to the casing. Tighten the setscrews to 27 Nm.

0·25 mm = 0·010 in
0·075 mm = 0·003 in
0·75 mm = 0·030 in
0·010 mm = 0·004 in
0·05 mm = 0·002 in
27 Nm = 2·8 kg m = 20 lb ft

AXLE TO TRANSFER GEARBOX DRIVE SHAFT

DISASSEMBLY

Figure 17

1. Remove the eight bolts and nuts from each flange and remove the shaft from the tractor.
2. Clean the shaft before disassembling.
3. Remove the sliding joint by turning the cap counter-clockwise, then slide the joint off the shaft.
4. Release the tension on the circlips by lightly hitting or pressing each cup away from circlip.

   Use circlip pliers to remove the circlips from the universal joint cups.

   Remove all paint from around the cups and circlip grooves.

   Remove any protrusions from around the cups and grooves.

   Repeat this on all cups.
5. Press out one cup on each side of the joint as shown in Figure 17.
6. Hold the part of the cup which is out in a vice as shown.

   Turn and pull up on the yoke at the same time to remove the cup.

   Hit with a soft face hammer at F as shown if necessary to help the operation.
7. Repeat steps 5 and 6 on all other cups.
8. Remove the cross journal.

ASSEMBLY

Figure 18

1. Insert the cross journal into the yoke of the shaft as far as it can go.
2. Carefully put a cup complete with needle bearings on to the cross journal. Make sure the bearings do not move out of position when doing this.
3. Use a 6 in vice as shown to press the cup into the yoke as shown in Figure 18.

   Hold the cross journal towards the yoke while doing this.

   Use a spacer which will push the cup into the yoke until the circlip groove is clear.
4. Install the circlip and press into position with the same spacer used for the cup. Make sure the circlip fully enters the groove. Use a hammer and punch to hit lightly into position if necessary.
5. Carefully move the cross journal towards the opposite side of the yoke as far as possible.

   Make sure it stays in the cup which has been fitted.
6. Carefully put the second cup in position on the journal and press into place with the vice as shown.
7. Repeat operations 3 and 4.
8. Install the cross journal in the other yoke and repeat operations 2 to 7.
9. After the assembly is complete move the joint to see if it is free.

   If it is not free, hit the yokes lightly with a hammer while moving the joint.

   If the joint still feels tight, it can indicate a bearing is out of position.

   The joint must be disassembled and the bearings checked.
10. Align the arrows on shaft and sliding joint, as shown in Figure 19.

    Slide the sliding joint on to the splines and fasten the cap.

IMPORTANT: Make sure the universal joints are aligned as shown in Figure 19, or the joints will fail.

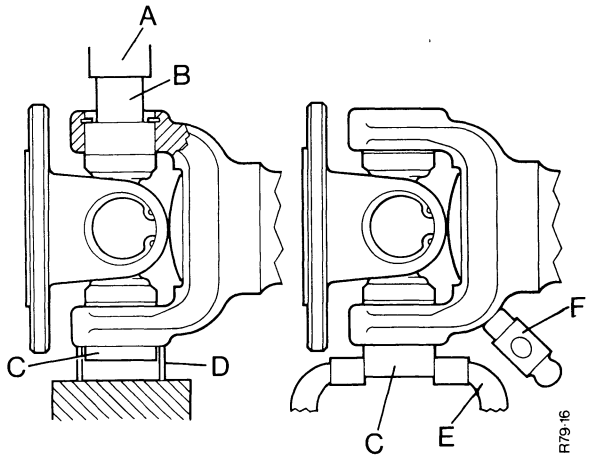

FIGURE 17. REMOVING BEARING CUPS FROM UNIVERSAL JOINT

A. Press
B. Spacer
C. Bearing cup
D. Piece of metal tube
E. 6 in vice
F. Position to hit with hammer

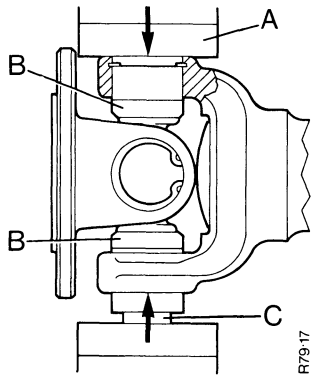

FIGURE 18. INSTALLING BEARING CUPS IN A UNIVERSAL JOINT

A. 6 in vice *B. Bearing cups* *C. Spacer*

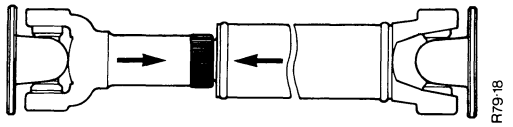

FIGURE 19. INSTALLING THE SLIDING JOINT

FRONT DRIVE AXLE

DRIVE FLANGE OIL SEAL

1. Put a container which can hold at least 9 litres under the differential. Remove the drain plug.
2. Install the drain plug when the oil has stopped flowing.
3. Remove the bolts which fasten the drive shaft to bevel pinion flange and lower the shaft to the ground.
4. Make sure the hand brake is fully applied and engage a gear in the main gearbox.
5. Remove the flange nut, washer and cork seal.
6. Use a 3 leg puller to pull off the drive flange.
7. Use a lever to remove the old oil seal.
8. Clean and check all parts for wear and damage, especially the oil seal location on driveshaft flange. Replace drive flange if necessary.
9. Press a new seal into the differential housing until it is against the distance piece.

   Use a tool made to the dimensions shown in the Figure 7.
10. Install the drive flange with a new cork seal, washer and nut.
11. Tighten nut to 190 Nm.
12. Fasten the drive shaft to differential flange.
13. Fill the differential with oil to the correct level.
14. Put gears in neutral.
15. Test the tractor on the highway, then check for oil leaks.

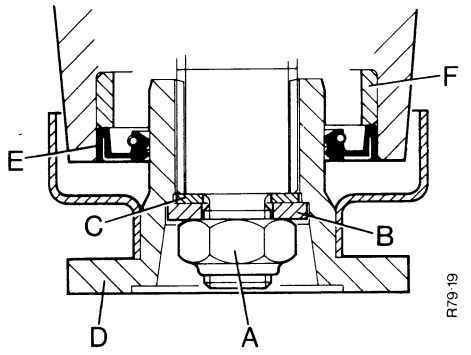

FIGURE 20. DRIVE FLANGE ASSEMBLY

A. Nut
B. Washer
C. Seal washer
D. Flange and shield
E. Oil seal
F. Spacer

9 litre = 16 pt = 10 U.S. qt 190 Nm = 19·3 kg m = 140 lb ft

REMOVING AND INSTALLING

REMOVING THE AXLE

1. Apply the hand brake and put blocks in front of and behind the rear wheels. Drain the oil from the differential and hubs if the axle is going to be disassembled.
2. Remove the bolts which fasten the drive shaft to the axle bevel pinion shaft.
3. Put an acceptable container under the steering ram and remove the hydraulic pipes.
4. Put a jack of at least 3 tons capacity under the centre of the axle as a support.
5. Loosen the front wheel nuts.
6. Raise the front of the tractor and put supports between the main frame and the ground.
7. Remove the front wheels.
8. Lower the tractor on to the supports but keep the jack under the axle.
9. Loosen the locking bolt for the trunnion pin five turns. Hit the head of the locking bolt to push the sleeve clear of the trunnion pin. Remove the bolt and sleeve.

NOTE: On later tractors the bolt and sleeve have been replaced with a cotter pin. The trunnion pin has a flat on it.

10. Remove the core plug from the trunnion pin bore.
11. Adjust the jack to hold the weight of the axle with the tractor weight firmly on the supports.
12. Use a slide hammer to remove the trunnion pin from the front extension. The pin has a hole in the centre which has a $\frac{5}{8}$ UNC thread.
13. Get assistance to hold the axle while it is lowered to the ground and moved clear of the tractor.
14. Use a hoist to lift the axle to a work bench or stand.

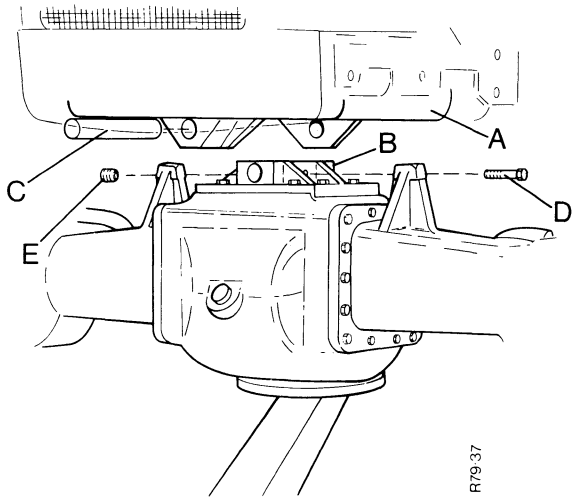

FIGURE 21. REMOVING THE AXLE

A. Front frame
B. Trunnion bracket
C. Trunnion pin
D. Locking bolt
E. Sleeve

163 Nm = 16·6 kg m = 120 lb ft

INSTALLING THE AXLE

1. Use a hoist to lift the axle on to a jack.
2. Install the 'O' rings on the thrust washers for the trunnion pin.
3. Put thick grease on both sides of the thrust washers and install into the axle trunnion bracket.
4. Raise the axle into position under the tractor. Make sure the thrust washers are not moved out of place when doing this. Make sure the axle is kept level.
5. Use a bar to align the holes of the axle and front extension. Put grease on the trunnion pin, install the 'O' ring.
6. Enter the pin into the front extension. Turn the pin until the chamfer of the bolt hole is toward the left-hand side of the tractor.
7. Use a soft face hammer to hit the pin into position.
8. Install the bolt and sleeve which fastens the trunnion pin in position. The sleeve fits in the left-hand side of the trunnion bracket.
9. Tighten the bolt then install new locking wire to hold it.
10. Raise the drive shaft into position. Install the bolts and nuts through the flanges and tighten.
11. Connect the steering pipes to the steering ram.

NOTE: Make sure the pipes are connected to the correct positions.

12. Fill the steering reservoir with the correct oil, with steering straight forward.
13. Remove air from the system as follows:
    (a) Run the engine at idle speed.
    (b) Loosen the left-hand bleed screw and turn the steering to the right. Tighten the bleed screw.
    (c) Loosen the right-hand bleed screw and turn the steering to the left. Tighten the bleed screw.
14. Install the front wheels and nuts.
15. Raise the tractor and remove the supports from the frame.
16. Lower the tractor to the ground and tighten the wheel nuts to 163 Nm.

    Remove the jack.
17. Check the oil level in the steering reservoir with the wheels straight forward.

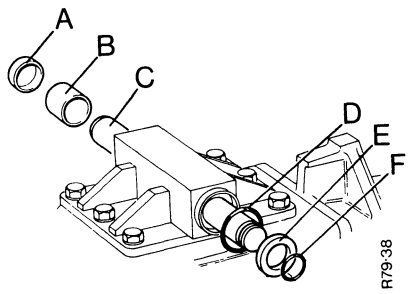

FIGURE 22. COMPONENTS OF THE TRUNNION PIN

A. Core plug
B. Bush, (two off)
C. Trunnion pin
D. Seal, (two off)
E. Thrust washer, (two off)
F. 'O' ring

DISASSEMBLY AND ASSEMBLY

DISASSEMBLING THE REDUCTION GEARS

1. Remove the oil from the differential and front hubs.
2. Remove the eight setscrews which fasten the end plate to the front hub.
3. Remove the end plate complete with planet gears and carrier.
4. Remove the six setscrews which fasten the planet carrier to the end plate.
5. Remove the planet carrier and gears.
6. Remove the needle roller bearings.
7. Use a hammer and soft metal punch to remove the bearing pins from the planet carrier.

   If the bearing pins stay in the end plate B, do not remove unless new pins are to be fitted.

   To remove the pins from the end plate, hold the pins in a vice. Pull up on the end plate and turn it at the same time.

ASSEMBLING THE REDUCTION GEARS

1. Press the bearing pins for the planet gears into the end plate.
2. Put the needle roller bearings on to the pins.
3. Put the planet gears on to the bearings.
4. Put the planet carrier on the end plate. Install the tabwashers and the six setscrews which fasten the planet carrier to the end plate. Tighten the setscrews to 41 Nm, bend the tabwashers against the setscrews.
5. Clean the faces of the end plate and hub housing.
6. Install a new gasket on the dowels of the hub housing.
7. Install the end plate on the hub housing.

   Install the eight setscrews which fasten the end plate to the housing.

   Tighten the setscrews to 101 Nm.

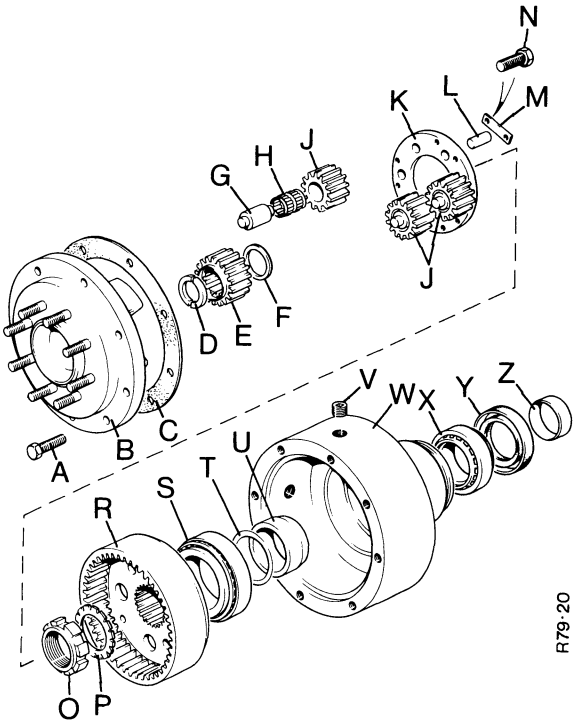

FIGURE 23. HUB UNIT DISASSEMBLED

A.	*Setscrews, end plate*	*N.*	*Setscrew, planet carrier*
B.	*End plate*	*O.*	*Ring nut*
C.	*Gasket*	*P.*	*Tabwasher*
D.	*Split ring*	*R.*	*Annulus gear*
E.	*Sun gear*	*S.*	*Taper roller bearing*
F.	*Spacer*	*T.*	*Shims*
G.	*Bearing pin*	*U.*	*Spacer*
H.	*Needle roller bearing*	*V.*	*Plug*
J.	*Planet gears*	*W.*	*Housing*
K.	*Planet carrier*	*X.*	*Taper roller bearing*
L.	*Dowel*	*Y.*	*Oil seal*
M.	*Tabwasher*	*Z.*	*Wear sleeve*

41 Nm = 4 kg m = 30 lb ft
101 Nm = 10 kg m = 75 lb ft

THE HUBS

DISASSEMBLING THE HUBS

1. Carefully, pull the sun gear drive shaft out approximately 5 mm. Push the sun gear in until the split ring can be removed.

NOTE: Damage can be caused to the drive shaft oil seal if the shaft is pulled out too far.

2. Remove the sun gear and the thrust washer.

   Do not push the drive shaft into the axle, this will cause damage to the oil seal.

3. Bend the tabwasher away from the ring nut. Use the special spanner to remove the ring nut. See Figure 5.

   Remove the tabwasher.

4. Remove the annulus ring and the outer bearing cone together.
5. Remove the shims and spacer from the stub axle.
6. Carefully remove the hub housing from the stub axle.
7. Remove the bearing cone from the annulus ring.
8. Remove the bearing cone and the oil seal from the stub axle.
9. Use a hammer and soft metal punch to remove the two bearing cups from the hub housing.

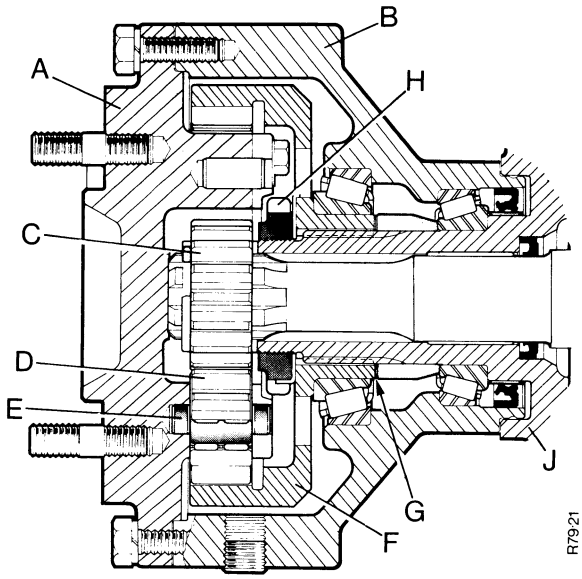

FIGURE 24. HUB ASSEMBLED

A. End plate
B. Housing
C. Sun gear
D. Planet gear
E. Bearing pin
F. Annulus gear
G. Shims
H. Ring nut
J. Stub axle

ASSEMBLING THE HUBS

1. Check the wear sleeve for the oil seal on the stub axle for wear or damage. Replace if necessary.
2. Use the special tool shown in Figure 1 on page 3 to remove the bush.

   Align the sleeve with the shoulder of the stub axle, when installing.

3. Install the complete inner bearing into the hub housing.
4. Press the oil seal, lip toward the bearing, into the hub housing.
5. Put the hub housing in position on the stub axle.
6. Slide the spacer on to the stub axle, chamfer toward inner bearing.
7. Install shims to the value of 2·03 mm next to the spacer.
8. Press the outer bearing cone on to the annulus ring and the cup into the hub housing.
9. Put the annulus ring in position on the stub axle.
10. Install the nut without the tabwasher.

    Use tool No. DB 1008 to tighten to 203 Nm. See Figure 5 on page 7.

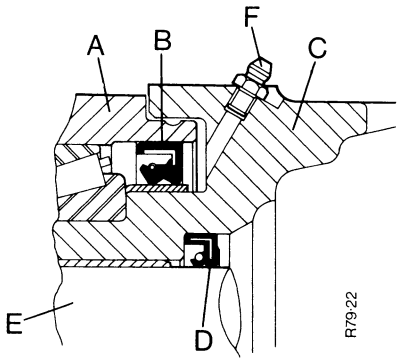

FIGURE 25. ARRANGEMENT OF OIL SEALS

A. Hub housing
B. Oil seal
C. Stub axle
D. Oil seal
E. Drive shaft
F. Grease fitting

5 mm = 0·19 in
2·03 mm = 0·079 in
203 Nm = 21 kg m = 150 lb ft

11. Put the probe of a dial gauge against the outside face of the hub housing.
    Move the housing inward then outward and rotate the housing at the same time.
    Make a note of the amount of movement.
12. To find the correct amount of shims to remove, use the following example:

Example:	Amount of movement	0·41 mm
	Amount of preload	0·10 mm
	Thickness of shims to remove	0·51 mm

NOTE: Tolerance on preload is 0·08 to 0·13 mm

13. Remove the nut, annulus ring and the shims.
14. Install the correct amount of shims.
    Install the annulus ring and the tabwasher and nut.
    Tighten the nut to 203 Nm and bend the tabwasher to hold it.
15. Install the thrust washer and then the sun gear on to the drive shaft.
16. Pull the drive shaft out just far enough to install the split ring. Push the drive shaft in when the split ring is in position.

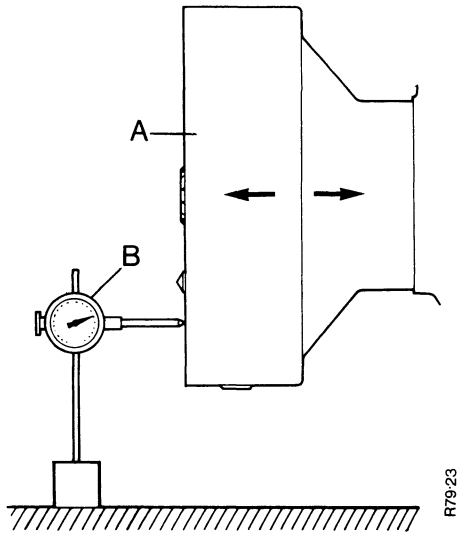

FIGURE 26. CHECKING END MOVEMENT OF HUB HOUSING

A. Housing
B. Dial gauge

0·41 mm = 0·016 in
0·10 mm = 0·004 in
0·50 mm = 0·020 in
0·08 mm = 0·003 in
0·13 mm = 0·005 in
203 Nm = 21 kg m = 150 lb ft

STUB AXLES

DISASSEMBLING THE STUB AXLES

This operation can be done without disassembling the hubs, if necessary.

1. Remove the nut which fastens the ball socket to the steering lever.
2. Use a copper face hammer to hit the steering link until the ball socket is released. Remove ball socket assembly.
3. Remove the four bolts which fasten the steering lever to the stub axle.

   Remove the steering lever.
4. Remove the four setscrews which fasten the bottom bearing pin to the stub axle.
5. Install two of the setscrews into the two holes which have threads in the bearing pin.

   Tighten the setscrews equal amounts until the pin is pulled from the bearing.
6. Remove the four setscrews which fasten the top bearing pin to the stub axle.
7. Install two of the setscrews into the two holes which have threads in the bearing pin. Get assistance to hold the stub axle.

   Tighten the setscrews equal amounts until the pin is pulled from the stub axle.

   Remove the bearing pin and shims.

NOTE: When the stub axle is being removed complete with the hub, use a sling and hoist or jack.

The drive shaft will come away with the assembly. Get assistance to hold the drive shaft as it comes out of the case.

A new seal must be installed in the axle case when assembling.

8. Slide the stub axle off the drive shaft.
9. Remove the setscrews from the bearing pins.
10. Remove the sealing discs and 'O' rings.
11. Remove the bearing cones.
12. Use a hammer and a soft metal punch to remove the bearing cups.
13. Remove the grease shields from the axle case.
14. Remove the oil seal from the stub axle with a lever.
15. Remove the wear sleeve (mild steel) for the hub oil seal from the stub axle as follows:
    (a) Use a hacksaw to cut almost through the sleeve.
    (b) Use a chisel to finish cutting through the sleeve. Take care not to damage the stub axle surface under the sleeve.
16. Use the special tool in Figure 1 to remove the bush from the stub axle.

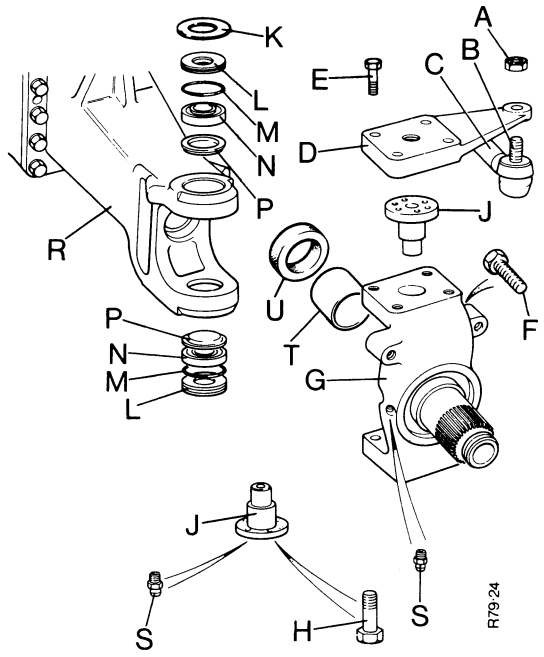

FIGURE 27. STUB AXLE ASSEMBLY

A. Nut, ball socket
B. Ball socket
C. Steering link
D. Steering lever
E. Setscrew lever
F. Steering stop screw
G. Stub axle
H. Setscrew, bearing pin
J. Bearing pin
K. Shims
L. Sealing discs
M. 'O' ring
N. Bearings
P. Grease shield
R. Axle case
S. Grease fitting
T. Bush
U. Oil seal

ASSEMBLING THE STUB AXLES

1. Check the bush in the stub axle for wear or damage. Replace if necessary.
2. Press a new oil seal into the stub axle. Make sure the lip is toward the end of the hollow shaft.
3. Install the grease shields and taper roller bearings into the ends of the axle case.
4. Check the 'O' rings on the sealing discs for wear or damage.

   Replace if necessary. Install the discs into the axle case.
5. Get assistance to hold the stub axle or front hub reduction unit in position on the axle case.
6. Install the bottom bearing pin. Install the four setscrews which fasten the pin to the stub axle and tighten to 68 Nm.
7. Install the top bearing pin without shims.

   Install the four setscrews.

   Tighten each setscrew an equal amount until all free up and down movement of the pin is just removed.
8. Use a feeler gauge to measure the gap under the bearing pin flange. Make a note of the measurement.
9. Remove the top bearing pin.

   Install shims 0·38 mm less than the measurement of the gap on the pin.

NOTE: This will give the correct bearing preload of 0·10 to 0·15 mm with full load on the axle.

10. Install the bearing pin and shims.

    Install the four setscrews and tighten to 68 Nm.
11. Install the steering lever and the four bolts which fastens the lever to the stub axle.

    Tighten the bolts to 163 Nm.
12. Install the steering link.

    Install the nut which fastens the link to the steering lever and tighten to 135 Nm.
13. Put grease in the grease fittings for the swivel pins.

    Remove the square plug to gain access to the top fittings.

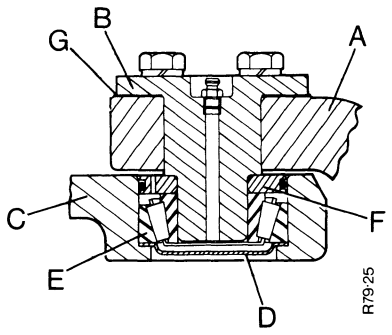

FIGURE 28. TOP BEARING PIN ARRANGEMENT

A. Stub axle
B. Bearing pin
C. Axle case
D. Grease shield
E. Taper roller bearing
F. Sealing disc
G. Shims

0·15 mm = 0·006 in
0·10 mm = 0·004 in
0·38 mm = 0·015 in
68 Nm = 7 kg m = 50 lb ft
135 Nm = 14 kg m = 100 lb ft
163 Nm = 17 kg m = 130 lb ft

DRIVE SHAFTS

DISASSEMBLY

1. Carefully slide the shaft out of the axle case and clean before disassembling.
2. Remove any tension from the circlips which hold the bearing cups by pressing down on the cup.
3. Use circlip pliers to remove each circlip.
4. Use a 12 mm spanner to remove the plugs from the 4 bearing cups in the centre housing of the universal joint.
5. Use the tool shown in Figure 8 on page 8 and a slide hammer to remove these cups. See B Figure 29.
6. Cups without plugs must be removed by pressing on one cup to push the opposite cup out. See Figure 30.

   Hold the cup in a vice as shown at C and pull up and turn the yoke at the same time.

   Do the same for the other cups.
7. Use a lever to remove the oil seal from the axle case. Use the special tool shown in Figure 4 on page 6 to insert a new seal, lip towards differential.
8. If the bush in the axle case is worn remove the half case from the differential. Use the special tool shown in Figure 1 on page 5 to remove the bush. This job must be done before installing a new oil seal.

ASSEMBLY

Make sure all parts are clean and there are no protrusions in the bores of the yokes. Remove any protrusions from around the circlip grooves.

1. Insert one of the cross journals into the centre housing.
2. Carefully put one of the bearing cups on the cross journal.

   Make sure the needle bearings stay in position while doing this.
3. Use a 150 mm vice to press the cup into the housing as shown in Figure 31.
4. Hold the cross journal towards the cup while doing this.
5. Use a spacer to press the cup into the housing until clear of the circlip groove. Install the circlip and press it into the groove with the spacer.

   Repeat this for the other cup.
6. Repeat steps 1 to 5 for the other cross journal. Then install the 4 plugs.
7. Insert the cross journals into the half shafts and repeat steps 1 to 5 to insert the bearing cups.

IMPORTANT: Make sure all the circlips are fully in the grooves.

Use a hammer and punch to hit into position, if necessary.

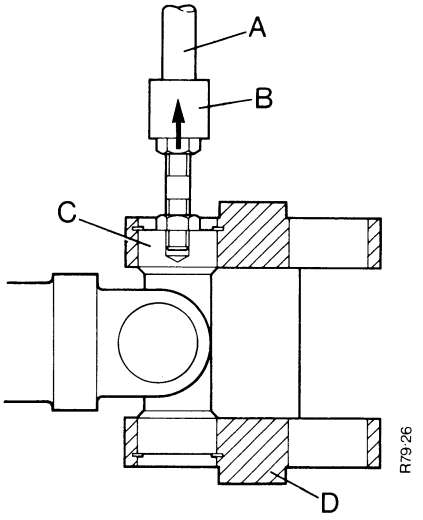

FIGURE 29. REMOVING CUPS FROM CENTRE HOUSING OF UNIVERSAL JOINT

A. Slide hammer *C. Bearing cup*
B. Special tool *D. Centre housing*

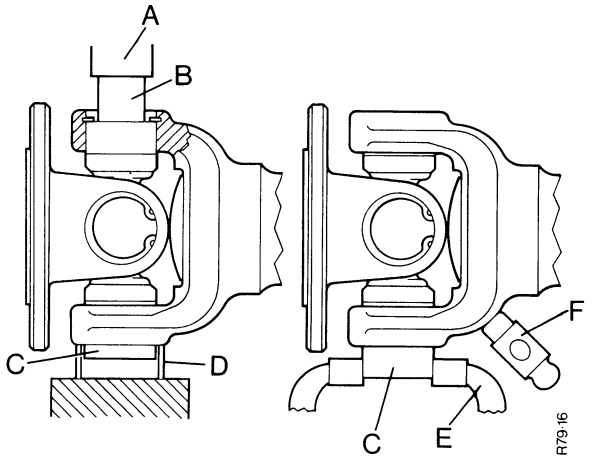

FIGURE 30. REMOVING CUPS FROM HALF SHAFT YOKES

A. Press *D. Metal tube*
B. Spacer *E. Vice*
C. Bearing cups *F. Soft face hammer*

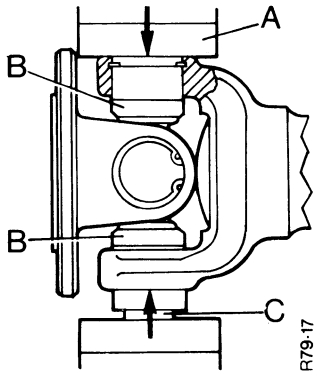

FIGURE 31. INSTALLING THE BEARING CUPS

A. 6 in Vice *B. Bearing cups* *C. Spacer*

12 mm = 0·47 in
150 mm = 6 in

DIFFERENTIAL

REMOVAL AND DISASSEMBLY OF DIFFERENTIAL

1. Remove the four bolts which hold the steering ram caps to the differential support bracket. Remove the ram cylinder.
2. If the bevel pinion shaft is to be removed, loosen the nut on the end of the shaft.
3. Remove the setscrews which fasten the differential unit to the axle case. Remove the differential unit.
4. Put the differential unit on an acceptable stand or in a vice.

NOTE: Use soft metal jaws if a vice is used.

5. Remove the setscrews and locking plates which hold the ring nuts.
6. Make a mark on the bearing caps and the support bracket for correct identification when assembling.
7. Remove the bolts which fasten the bearing caps to the support bracket.
8. Hold the spiral gear and differential cage while removing the bearing caps and ring nuts.
9. Remove the spiral gear and differential unit from the support bracket.
10. Remove the bearings from the differential cage with a 3 leg puller. If the outer race only comes off, put it with the thick edge towards the cage. Insert three balls and use the puller again to remove the inner race.
11. Remove the nine setscrews which fasten the end plate to the cage. Remove the end plate and differential wheel.
12. Remove the twelve setscrews which fasten the spiral gear to the cage.

    Remove the spiral gear.
13. Use a hammer and soft metal punch to remove the differential pin.
14. Remove the two differential pinions and the other differential wheel.

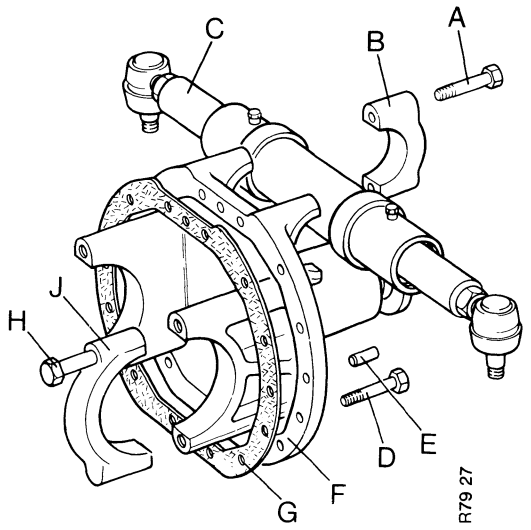

FIGURE 32. DIFFERENTIAL SUPPORT BRACKET

A. Cap bolt, steering ram
B. Cap, steering ram
C. Steering ram
D. Bolt, to axle
E. Dowel
F. Support bracket
G. Gasket
H. Bolt, bearing cap, differential
J. Bearing cap, differential

Disassembling the Bevel Pinion Shaft

1. Remove the nut and washers from the end of the bevel pinion shaft.
2. Remove the flange and guard.
3. Remove the oil seal and distance collar from the support bracket.
4. Remove the outer bearing cone and the distance pieces and shims.
5. Remove the bevel pinion shaft from the support bracket.
6. Remove the inner bearing cone from the bevel pinion shaft.
7. Use a hammer and punch to remove the bearing cups from the support bracket. Remove the shims from behind the inner bearing cup.
8. Clean and examine all parts for wear or damage. Replace parts which are found with wear or damage.

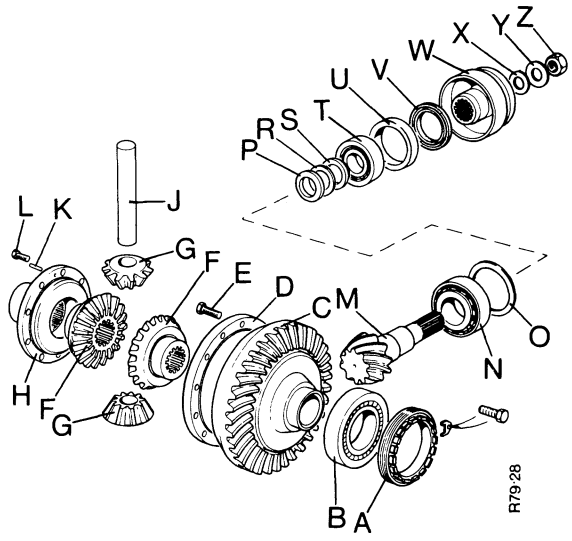

FIGURE 33. DIFFERENTIAL UNIT ASSEMBLY

A. Ring nut
B. Taper roller bearing
C. Spiral gear
D. Cage
E. Setscrew
F. Differential wheel
G. Differential pinion
H. End plate
J. Pin
K. Dowel
L. Setscrew
M. Bevel pinion shaft
N. Taper roller bearing
O. Shims
P. Distance piece
R. Shims
S. Distance piece
T. Taper roller bearing
U. Distance collar
V. Oil seal
W. Flange and guard
X. Seal washer
Y. Thick washer
Z. Nut

ASSEMBLING AND SETTING THE PINION SHAFT

1. Use a hammer and a steel punch or a three leg slide hammer, remove the inner bearing cup from the differential support bracket. Make sure there is no damage of the bearing seats.
2. Remove the shims which are installed behind the bearing cup.
3. Install the bearing cup without the shims and make sure it is pressed fully into the support bracket.
4. Install the inner bearing cone on to the bevel pinion shaft.
5. Put the bevel pinion shaft in position in the support bracket.
6. Put the outer bearing cone, flange and guard on to the shaft.
7. Install the washers and nut.
8. Rotate the shaft by hand and tighten the nut. Tighten until all end movement of the shaft is just removed. Then tighten the nut a small amount to give the bearings preload. If necessary, install the spiral gear to enable the nut to be tightened. Remove it when the nut is tight enough.
9. Assemble the setting gauge, number DB 8208. Use probe number SK/DB 9721 and spacer number SK/DB 9721/2 5.1875/4WD.

   Install the probe with spacer into the shaft.

   Install the lock nut.
10. Put the gauge in position in the support bracket as shown in Figure 34.

    Install the bearing caps and bolts and tighten to 163 Nm.
11. Make sure the shaft B rotates easily in the discs A.

    Put the point of the probe C against the end face of the bevel pinion shaft J.
12. Adjust the probe until the point is just making contact with the face. Tighten the lock nut and check the setting of the probe again. Set again if not correct.
13. Use a feeler gauge to measure the gap at X between the shaft B and the spacer E. Make a record of the measurement.

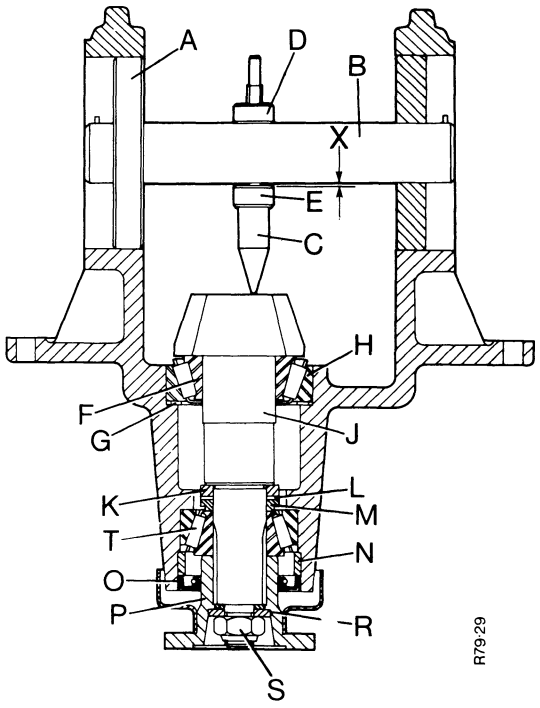

FIGURE 34. SETTING THE BEVEL PINION SHAFT POSITION

A. Disc
B. Shaft
C. Probe
D. Special lock nut
E. Spacer 5·1875 in
F. Inner bearing cone
G. Shims
H. Inner bearing cup
J. Bevel pinion shaft
K. Flat distance piece
L. Shims
M. Distance piece with shoulder
N. Distance collar
O. Oil seal
P. Flange and dirt shield
R. Washers
S. Nut
T. Outer bearing
X. Gap

163 Nm = 16·5 kg m = 120 lb ft
5·1875 in = 131·75 mm

14. Look for the correction mark on the end of the bevel pinion gear. The amount of correction is shown as −7 or +7 for example, which is plus or minus 0·007 in.
15. Find the correct amount of shims to install as follows:

    Example 1: If a minus (−) number is shown on the gear

Normal dimension	0·76 mm	0·030 in
Minus correction	−0·18 mm	−0·007 in
Result A	0·58 mm	0·023 in
Measurement of gap X	1·45 mm	0·057 in
Minus result A above	−0·58 mm	−0·023 in
Thickness of shims needed	0·87 mm	0·034 in

    Example 2: If a plus (+) number is shown on the gear.

Normal dimension	0·76 mm	0·030 in
Plus correction	+0·18 mm	0·007 in
Result B	0·94 mm	0·037 in
Measurement of gap X	1·45 mm	0·057 in
Minus result B above	0·94 mm	0·037 in
Thickness of shims needed	0·51 mm	0·020 in

16. Remove the setting gauge when the amount of shims needed have been found.
17. Remove the nut, washers, flange and guard, and outer bearing cone from the bevel pinion shaft.
18. Remove the bevel pinion shaft from the support bracket.
19. Use a steel punch and a hammer or a 3 leg puller to remove the inner bearing cup from the support bracket.
20. Install the correct amount of shims and the inner bearing cup.

    Make sure the cup is pressed in as far as it can go.
21. Install the pinion shaft into the support bracket.
22. Slide the flat distance piece on to the pinion shaft.

    Install shims to a thickness of 1·27 mm.

    Install the distance piece which has the shoulder, largest diameter toward the shims.
23. Install the outer bearing cone, flange and guard, washers and nut.
24. Install the spiral gear and tighten the nut on the bevel pinion shaft to 190 Nm. Remove the spiral gear when the nut is tight and rotate the shaft in both directions.
25. Put the support bracket on a support with the flange of the bevel pinion shaft up.
26. Put the probe of a dial gauge against the end face of the flange. Move the pinion shaft up and down and make a note of the amount of movement shown.

    Turn the shaft and do the check again. Repeat this several times to get the correct reading.
27. Use the following example to find the correct amount of shims to install.

    Example:

Amount of movement	0·25 mm	0·010 in
Movement needed	−0·00 mm	−0·00 in
Shims to be removed	0·25 mm	0·010 in

NOTE: The tolerance is + or − 0·05 mm.

28. Remove the nut, washers, flange and guard, outer bearing cone, and distance piece.
29. Remove shims as necessary.

    Install the distance piece with the largest diameter toward the shims.

    Install the outer bearing cone, the oil seal spacer, oil seal, flange and guard, washers and nut.

    Tighten the nut to 190 Nm.

0·05 mm = 0·002 in
1·27 mm = 0·049 in
190 Nm = 19 kg m = 140 lb ft

ASSEMBLING THE DIFFERENTIAL

NOTE: During assembly, put molybdenum disulphide paste on all bores, pins and thrust faces.

1. Put the differential cage A on a bench with the open end up.
2. Install one of the differential wheels B in the cage.
3. Put the two differential pinions C in position on the wheel.
4. Push the differential pin D through the cage and pinions.
5. Install the other differential wheel.
6. Align the dowels and holes for the end plate. Press the end plate E into position.
7. Put Loctite 270 on the threads of the nine set-screws for the end plate.

   Install the tabwashers and setscrews and tighten the setscrews to 40 Nm.

NOTE: Long tabwashers must be installed over dowel holes.

   Bend the tabwashers against the heads of the setscrews.

8. Press the bearing on to the end plate. The thin edge of the bearing cup must be toward the end plate.
9. Press the bearing on to the cage. The thin edge of the bearing cup must be towards the cage.
10. Clean the faces of the spiral gear and differential cage and press the gear on to the cage.
11. Install the tabwashers and twelve setscrews which fasten the spiral gear to the cage. Tighten the setscrews to 68 Nm. Bend the tabwashers against the heads of the setscrews.
12. Put the differential support bracket in a stand or vice. Use soft metal jaws if a vice is used.
13. Put the differential unit in position in the support bracket.
14. Put the ring nuts in position against the bearings and install the bearing caps and bolts.

    Before tightening the bolts, make sure the ring nuts are correctly in the threads and easy to turn.

15. Carefully tighten the bearing cap bolts to 163 Nm.

IMPORTANT: Make sure there is a clearance between the teeth of the spiral gear and bevel pinion when tightening. Move the ring nuts if necessary. Damage can be caused if this is not done.

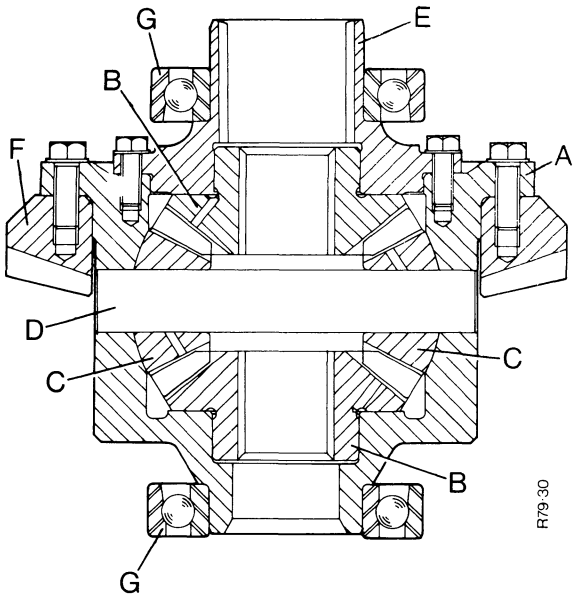

FIGURE 35. DIFFERENTIAL UNIT ASSEMBLED

A. Cage
B. Wheels
C. Pinions
D. Pin
E. End plate
F. Spiral gear
G. Ball bearings

40 Nm = 4 Kg m = 29 lb ft
68 Nm = 7 Kg m = 50 lb ft
163 Nm = 16·6 Kg m = 120 lb ft

ADJUSTING THE DIFFERENTIAL

1. Turn both ring nuts counterclockwise until there is a small clearance between the nuts and the bearings.

NOTE: If the ring nuts are difficult to turn loosen the bearing caps a small amount.

DO NOT loosen the caps more than is necessary.

2. Turn the ring nut on the spiral gear side counterclockwise and the other ring nut clockwise. Do this until the spiral gear can move freely between the pinion teeth.
3. Turn the ring nut on the spiral gear side clockwise until the spiral gear just becomes difficult to move.
4. Loosen the bearing caps a small amount. Hit the bearing caps with a copper hammer to align the bearings.

   Tighten the caps to 163 Nm.

   Check that the spiral gear is still just difficult to move, if not repeat steps 3 and 4.
5. Put the point of a 150 mm screwdriver in between two of the bolt heads. Move the spiral gear until screwdriver is horizontal.
6. Loosen one bearing cap a small amount.

   Loosen the ring nut one slot.

   Hit the bearing cap with a copper hammer.

   Tighten the cap bolts to 163 Nm.
7. Repeat step 6 until the weight of the screwdriver will just rotate the differential through the backlash.

   Check the movement at several different positions through one revolution of the spiral gear.
8. Make a mark on each ring nut and cap for adjustment reference.
8. The ring nuts B, must be turned in the same direction, exactly the same amount for further adjustment.
9. Fasten a dial gauge to the support bracket. See Figure 36. Put the probe of the dial gauge against the drive face of a tooth of the spiral gear. The probe must be at right angles to the tooth.
40. Turn the ring nuts the same amount to move the spiral gear toward the bevel pinion. Do this until the backlash between the spiral gear and pinion teeth is 0·18 to 0·23 mm.

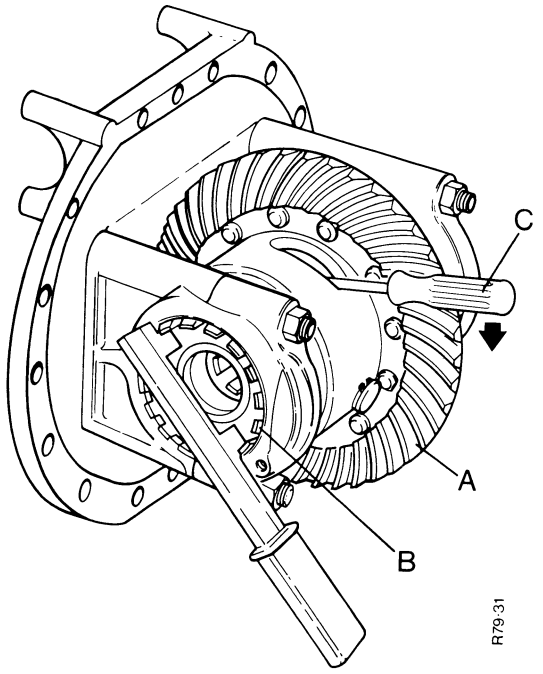

FIGURE 36. ADJUSTING DIFFERENTIAL BEARINGS

A. Spiral gear
B. Adjuster ring nut
C. 150 mm screwdriver

150 mm = 6 in
0·18 mm = 0·007 in
0·23 mm = 0·009 in
20 Nm = 2 kg m = 15 lb ft
163 Nm = 16·6 kg m = 120 lb ft

11. Remove the dial gauge.

    Loosen the bearing caps a small amount and hit with a copper hammer to align the bearings. Tighten the caps to 163 Nm.

12. Use the dial gauge to check the backlash setting again at three positions at 120 degree intervals.

NOTE: The backlash must never be below the minimum specification. If the variation is too much, remove the spiral gear and clean the rear face. Also clean the face of the cage where the spiral gear is fastened. Repeat the adjustment procedure.

13. When the adjustment is correct, install the locking plates for the ring nuts. Tighten the setscrews for the plates to 20 Nm.
14. Check the torque is correct on the bearing cap bolts.

INSTALLING THE DIFFERENTIAL ASSEMBLY

1. Clean the faces of the support bracket and the axle case.
2. Put a new gasket in position on the dowels of the axle case.
3. Install the differential unit into the axle case. Make sure damage is not caused to the gasket when doing this operation.
4. Install the fourteen setscrews which fasten the support bracket to the axle case. Tighten the setscrews to 68 Nm.

INSTALLING THE DRIVE SHAFTS

1. Fit new bushes and oil seals in the axle case.
2. Make sure the oil seal recesses are free from rust, paint and damage. Clean with fine emery paper if necessary.

   Remove any sharp edges from splines. Put a little grease on the splines and lip of oil seal then install.

3. Install the drive shafts, long end first, into the axle case. Make sure damage is not caused to the oil seals when doing this operation.
4. Turn each drive shaft until the splines at the inner end engage with the differential wheels. Push the shaft in fully.

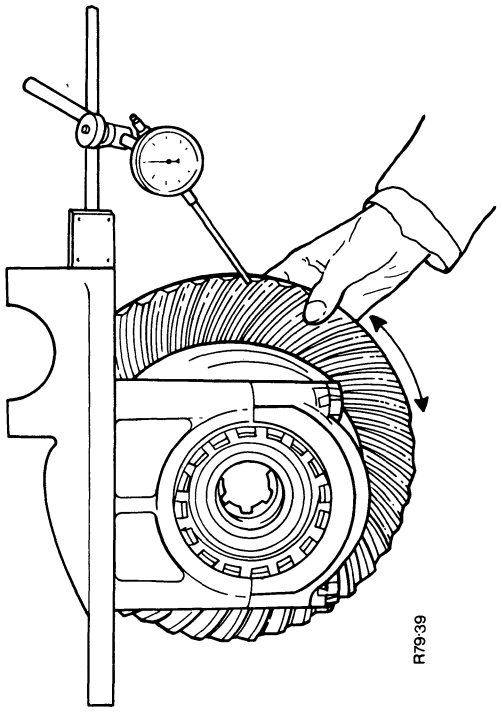

FIGURE 37. CHECKING BACKLASH

STEERING RAM

DISASSEMBLING THE STEERING RAM

1. Loosen the nuts on the ball sockets which connect the steering ram to the steering links.
2. Hit the steering link with a hammer around the ball socket taper to release it. Remove the nut.
3. Loosen the locknuts which hold the ball sockets to the steering ram rod.
4. Remove the four bolts which fasten the steering ram caps to the differential support bracket.
5. Remove the ram and remove any oil into a container, before putting the ram on a bench.
6. Remove the two ball sockets from the ram rod.
7. Remove the four circlips which hold the ram sleeves in position in the cylinder.
8. Pull the ram rod out of the ram cylinder complete with the ram piston and one sleeve. Remove the sleeve from the rod.
9. Remove the other sleeve from the ram cylinder.
10. Remove the back-up ring and 'O' ring from the outside of the sleeves.
11. Remove the dirt seal, large 'O' ring, small 'O' ring and back-up ring from inside the sleeves.
12. Remove the two circlips which hold the piston in position on the ram rod. Remove the piston.
13. Remove the 'O' ring from the groove in the ram rod.
14. Remove the 'O' ring and the two back-up rings from the piston.

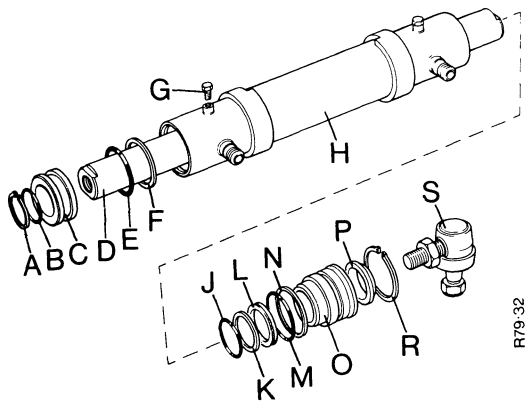

FIGURE 38. STEERING RAM ASSEMBLY

A. Circlip
B. 'O' ring
C. Piston
D. Ram rod
E. 'O' ring
F. Back-up ring
G. Bleed screw
H. Ram cylinder
J. 'O' ring
K. Back-up ring
L. Seal
M. 'O' ring
N. Back-up ring
O. Sleeve
P. Dirt seal
R. Circlip
S. Ball socket

ASSEMBLING THE STEERING RAM

1. Put the back-up rings in clean oil for a minimum of half an hour before installing.
2. Install the 'O' ring on to the ram piston. Install nylon back-up ring each side of the 'O' ring.
3. Install the 'O' ring in the groove at the centre of the ram rod.
4. Slide the piston on to the ram rod.
5. Install the circlips which hold the piston in position on the ram rod.
6. Install the thick 'O' rings in the bores of the ram sleeves, in the grooves away from the piston.
7. Install the back-up rings in the bores of the sleeves, in the grooves nearest the piston. Install the thin 'O' rings in the same grooves.

   Make sure the 'O' rings are nearest the piston when installed.
8. Install the dirt seals into the sleeves, in the outer grooves.
9. Install the back-up rings and the 'O' rings on the outside of the sleeves. Make sure the 'O' rings are nearest the piston when installed.
10. Remove any sharp edges from the outer ends of the ram cylinder.

    Put a little grease on the inside ends of the cylinder and on the piston and sleeve 'O' rings.

    Install one of the sleeves into the ram cylinder and install the circlips.
11. Carefully install the ram rod into the cylinder. Take care when entering the 'O' rings into the cylinder.
12. Install the other sleeve and circlips.
13. Put the ball sockets in the ends of the ram rod but do not tighten.
14. Install the ram on the differential support bracket, with the bleed screws up.
15. Install the caps, spring washer and bolts which fasten the ram to the support bracket. Tighten the bolts to 68 Nm.
16. Adjust one ball socket so that the centre of socket is 42·9 mm from the end of the ram rod. See Figure 41.

NOTE: The tolerance on this dimension is +0 to −1·6 mm.

17. Adjust the other ball socket until the distance between the socket centres is 730 mm.

NOTE: The tolerance on this dimension is 0 to −3·17 mm.

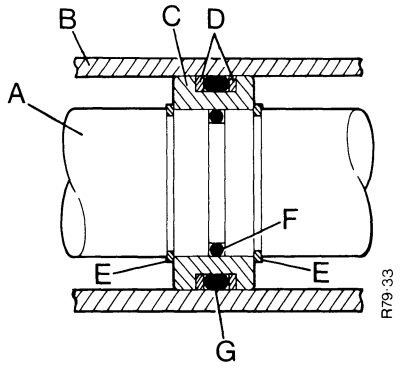

FIGURE 39. RAM PISTON ASSEMBLY

A. Ram rod
B. Ram cylinder
C. Piston
D. Back-up rings
E. Circlips
F. 'O' ring
G. 'O' ring

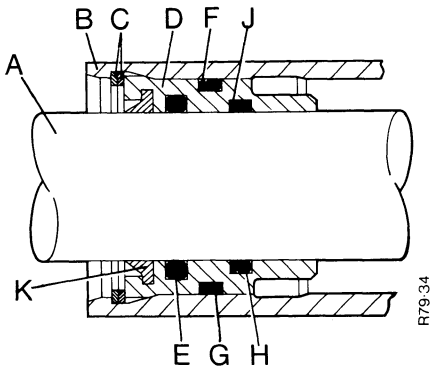

FIGURE 40. END SLEEVE ASSEMBLY

A. Ram rod
B. Ram cylinder
C. Circlips
D. Sleeve
E. Large diameter 'O' ring
F. Back-up ring
G. 'O' ring
H. 'O' ring
J. Back-up ring
K. Dirt seal

0·25 mm = 0·010 in
1·5 mm = 0·059 in
1·6 mm = 0·062 in
42·9 mm = 1·68 in
3·17 mm = $\frac{1}{8}$ in
730 mm = 28$\frac{3}{4}$ in
68 Nm = 7 kg m = 50 lb ft
135 Nm = 13·8 kg m = 100 lb ft

18. Install the steering links.
    Install the ball sockets to the links with the taper parts down.
19. Install the nuts on the ball sockets and tighten to 135 Nm.
20. Move the ram rod so that the distance between the ends of the rod and the cylinder is equal. Connect the link ball sockets to the steering levers. Adjust the ball sockets at the ends of the links until both hubs are straight forward.
    Install nuts on ball sockets and tighten temporarily.
21. Set the toe-in of the front wheels after the axle has been installed on the tractor.
    The toe-in must be 0 to 1·5 mm at the wheel rims.
    Tighten ball socket nuts to 135 Nm.
22. Turn the steering until the ram reaches maximum lock and adjust the four steering stop bolts.
    Adjust the bolts until there is a clearance of 0·25 mm between the bolt head and the axle case.
    Tighten the locknuts when the setting is correct.

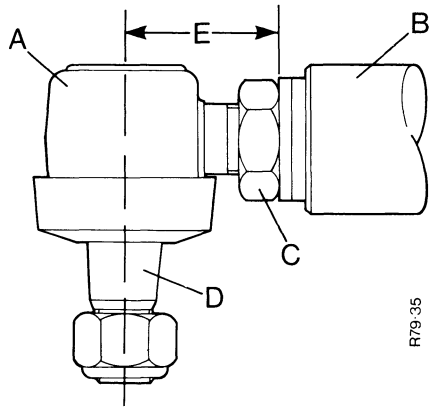

FIGURE 41. BALL SOCKET SETTING

A. Ball socket
B. Ram rod
C. Locknut
D. Taper
E. Distance of 42·9 mm

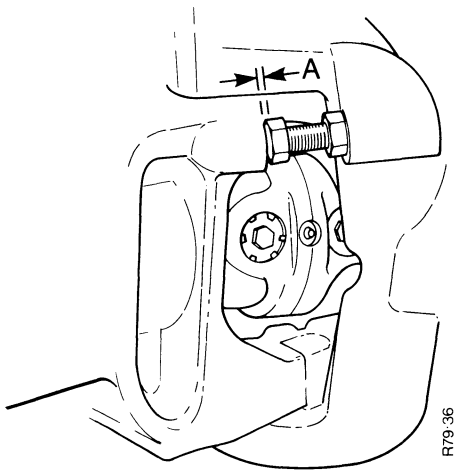

FIGURE 42. STEERING STOP SETTING

A. Clearance of 0·25 mm between bolt and axle case

135 Nm = 14 kg m = 100 lb ft
1·5 mm = 0·059 in
0·25 mm = 0·010 in

SPECIFICATIONS

FRONT AXLE

Spiral Gear/Pinion ratio	37/10	
Reduction	3·7:1	
Hub Reduction	3·75:1	
Total Axle Reduction	13·875:1	
Minimum Track	1524 mm	60 in
Maximum Track	1828 mm	72 in
Ground Clearance (11·2/10-24 tyres)	356 mm	14 in
Steering Angle	40°	
Toe-in (measured at the wheel rims)	0 to 1·5 mm	0 to 0·06 in

TYRE ARRANGEMENTS

	FRONT	REAR
1.	9·5/9-24	16·9/14-30
2.	9·5/9-24	12·4/11-36
3.	11·2/10-24	13·6/12-36

IMPORTANT: Do not use any other tyre arrangements or damage will be caused to the differential and transmission.

TORQUE SETTINGS

	Nm	Kg m	lb ft
Hub end plate setscrews	101	10·4	75
Planet carrier setscrews	40	4·15	30
Drive shaft ring nuts	203	20·7	150
Bearing pin setscrews	68	6·9	50
Steering lever bolts	163	16·6	120
Ball socket nuts	135	13·8	100
Drive shaft housing setscrews	101	10·4	75
Trunnion bracket setscrews	163	16·6	120
Steering ram cap bolts	68	6·9	50
Differential support bracket setscrews	68	6·9	50
Differential bearing cap bolts	163	16·6	120
Ring nut lockplate setscrews	27	2·8	20
Spiral gear setscrews	68	6·9	50
Differential end plate setscrews	40	4·15	30
Bevel pinion shaft nut	190	19·4	140
Wheel nuts	163	16·6	120

CAPACITIES

	Metric	Imperial	U.S.
Differential case	7·96 litres	14 pints	8·4 qt
Reduction Hubs (each)	0·85 litres	1·5 pints	0·9 qt

LUBRICATION

COMPONENT	B.P.	CASTROL	ESSO	MOBIL	SHELL
Differential, Front Hubs (each)	Gear Oil 90EP or Farm Gear Oil Universal	Agricastrol Gear Oil EP90/140	Gear Oil GP90/140	Mobilube GX90 Gear Oil	Spirax 90EP
Stub Axles Universal Joints Trunnion Pin	Energrease Universal or Energrease L2	Agricastrol Multi-use Grease	Beacon 2	Mobilgrease MP or Mobilgrease Super	Retinax A or Farm Grease Universal

TRANSFER GEARBOX

Reduction ratio	1·5:1	
End movement of all shafts	0·05 to 0·10 mm	0·002 to 0·004 in

TORQUE SETTINGS

Cover plate setscrews	27	2·8	20
Oil seal housing setscrews	27	2·8	20
Output shaft nut	190	19·4	140
Drive shaft flange bolts	54	5·5	40
Transfer box to frame	163	16·6	120

Front Axle & Steering
(2 WD Tractors)

SERVICING THE

ORBITROL (DANFOSS) STEERING UNIT

CASE CORPORATION

Rac. 9-78725

PRINTED IN U.S.A.

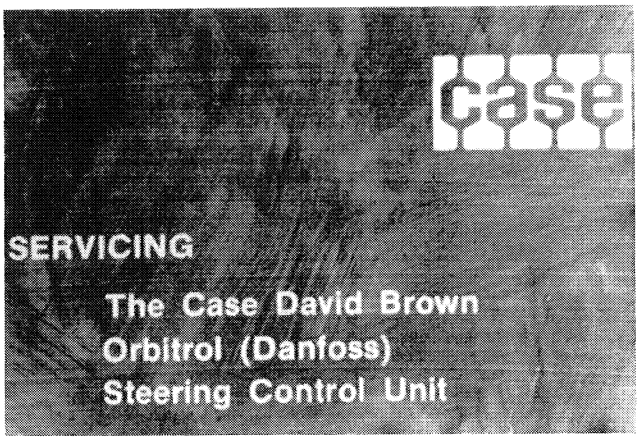

Figure 1

The purpose of this manual (fig. 1) is to cover the teardown, rebuild and servicing of the Orbitrol Steering Unit (hand pump) utilized in the hydrostatic steering system on Case David Brown tractors.

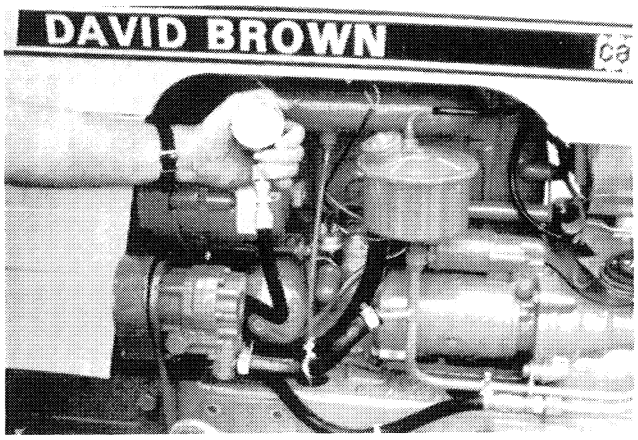

Figure 2

Figure 2 - System Diagnosis.

If a problem should be encountered in the hydrostatic steering system, before any teardown or disassembly is started, it is necessary that the total steering system be systematically diagnosed in order to determine the particular component in the system that is causing the problem to exist.

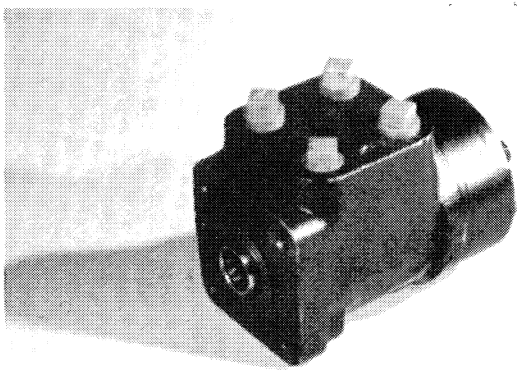

Figure 3

Figure 3. Orbitrol Unit Failure Diagnosis

If the system diagnosis has shown that the orbitrol steering control unit is at fault, the following checks, after oil is warmed up to operating temperature (above 100°), must be performed before removing the unit from the tractor in order to determine which parts in the orbitrol steering unit are at fault.

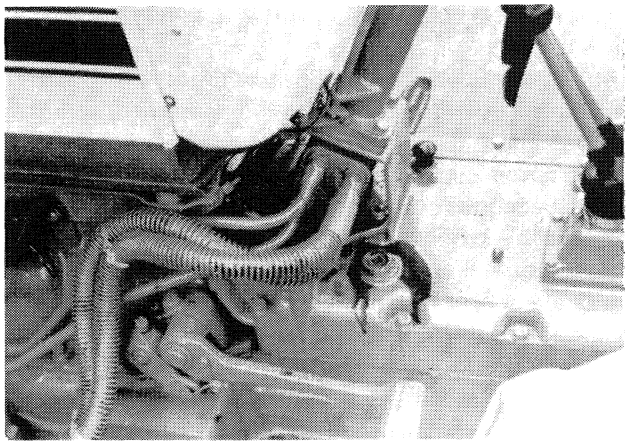

Figure 4

Figure 4 - Visual Check for External Leakage

Visually check the tractor in the area of the orbitrol unit to determine if external leakage is occurring. Care should be exercised, however, to insure that it is the orbitrol unit that is leaking and not an overflow from the power steering reservoir or transmission cover gasket leakage which could be incorrectly diagnosed as orbitrol steering unit leakage. If external leakage of the orbitrol steering unit is determined, it can be corrected by installing seal kit No. K962387.

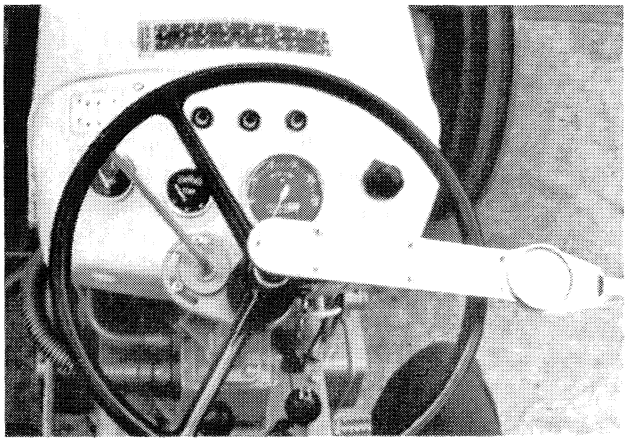

Figure 5

Figure 5 - Check For Excessive Steering Wheel Slip

With the engine running and in extreme right and left steering, at the end of cylinder stroke, apply a torque wrench on the steering wheel nut and exert twelve foot pounds of steering effort on the torque wrench. If the steering wheel rotates in excess of one full turn in fifteen seconds (4 RPM) it would indicate that the oil in the system is aerated or that there are worn lobs on the orbit section of the orbitrol control unit. After the elimination of the possibility of aerated oil, if the problem still exists, it will be necessary to replace the complete orbit (rotor) set.

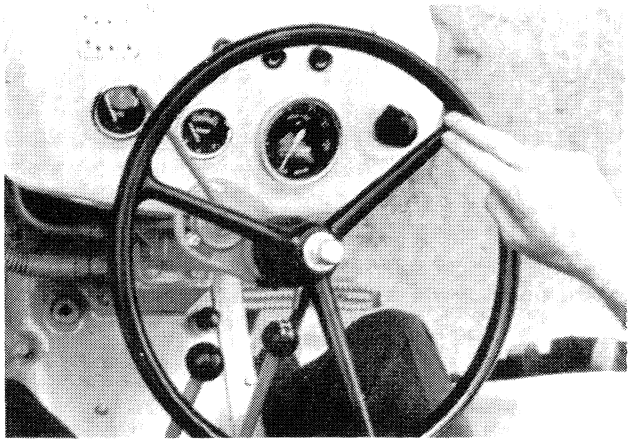

Figure 6

Figure 6. - Steering Wheel Does Not Return to Neutral.

Check the steering under normal steering conditions, that is, steering right and left. After a steering effort, and the steering wheel is released, if it does not return to a neutral condition it indicates that the centering springs are broken or that there is a partial seizure of inner control spool due to contamination in the system. Upon disassembly, if it is found that the centering springs are broken, it will be necessary to replace the complete set of six centering springs.

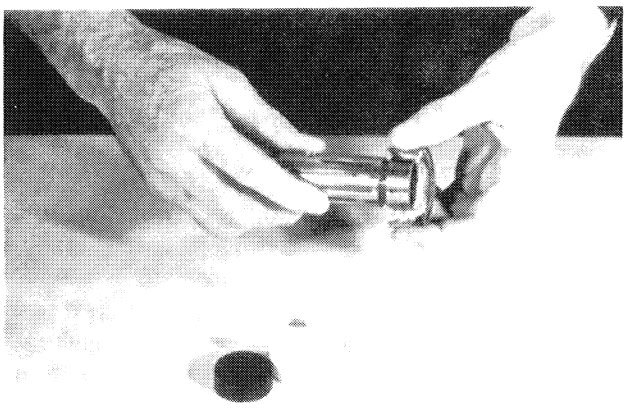

Figure 7

Figure 7 - Use of Polishing Material

If it is found that the control spool is galled, indicated by the difficulty in separating the pieces, and the scoring is not too great, it can be polished out through the use of jeweler's rouge, crocus cloth or lapping compound. It should be remembered, however, that the tolerances between these mated parts is such that unnecessary polishing will increase the tolerances and thus create other problems. (Excessive steering wheel slip). If the light scoring cannot be polished out, then it will be necessary to replace the complete orbitrol steering unit as these parts are a matched fit and are not serviced separately.

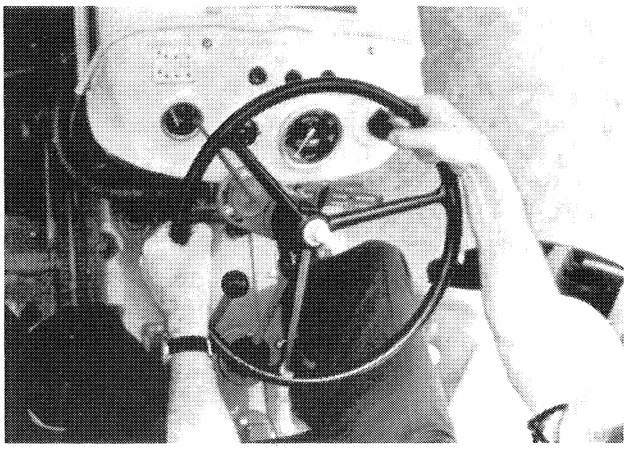

Figure 8

Figure 8 - Undue Steering Effort Required.

Operate the steering wheel to correspond with a normal steering operation both right and left hand. If a roughness or binding condition exists, it could indicate aeration of the oil in the system or partial seizure of the inner sleeve and) or outer sleeve due to contamination. The corrective action required would be the same as indicated previously when the steering wheel did not return to a neutral position when released except that in test 3 broken centering springs could not be a contributing factor. The "on the tractor testing" of the orbitrol control unit is now complete and it should be removed, if required for servicing.

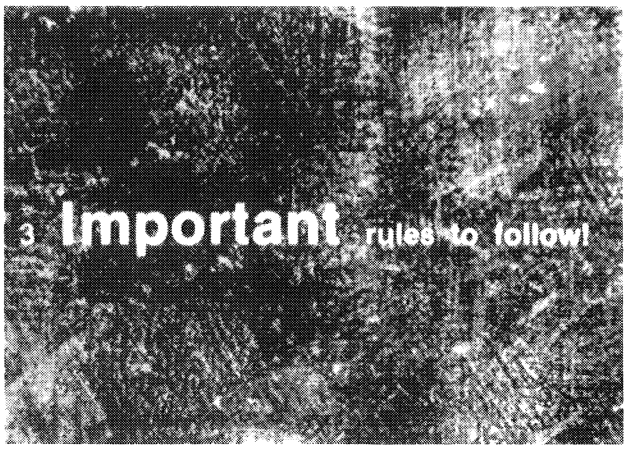

Figure 9

Figure 9 - Important Rules

The orbitrol unit is manufactured to very close tolerances, very much the same as you would find in diesel injection pumps. Therefore, there are three very important rules that must be followed when servicing the units to insure proper operation after repairs are completed.

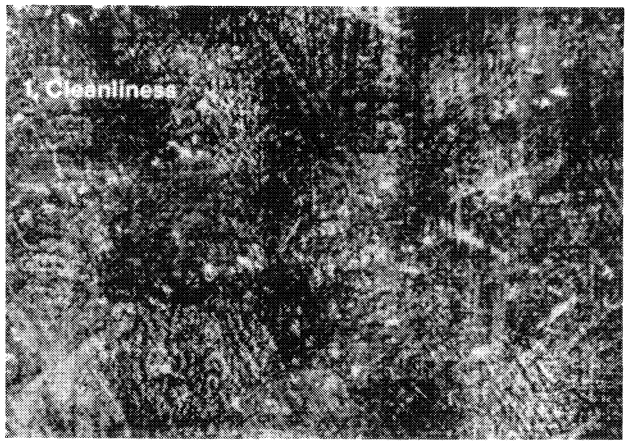

Figure 10

Figure 10 - Rule One

These three important rules are:

1. Cleanliness

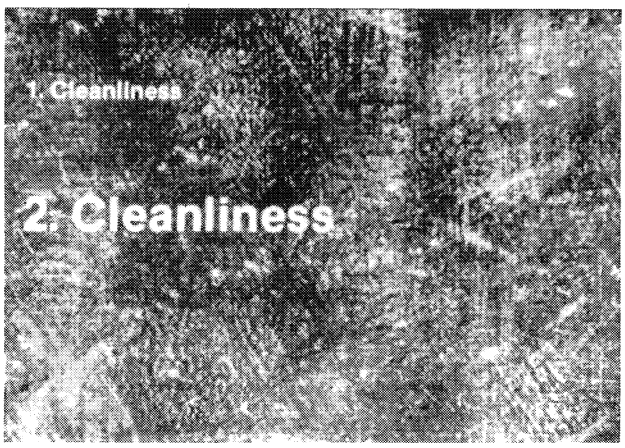

Figure 11

Figure 11 - Rule Two

Cleanliness and

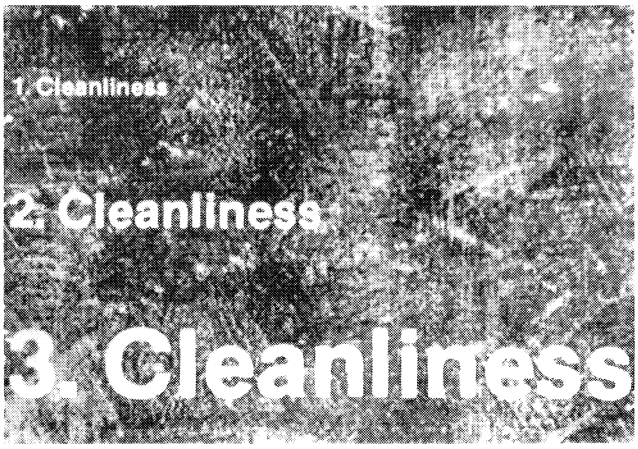

Figure 12

Figure 12 - Rule Three

Cleanliness. Contamination during assembly can destroy an otherwise successful repair job. Do not be defeated by dirt.

PRACTICE CLEANLINESS.

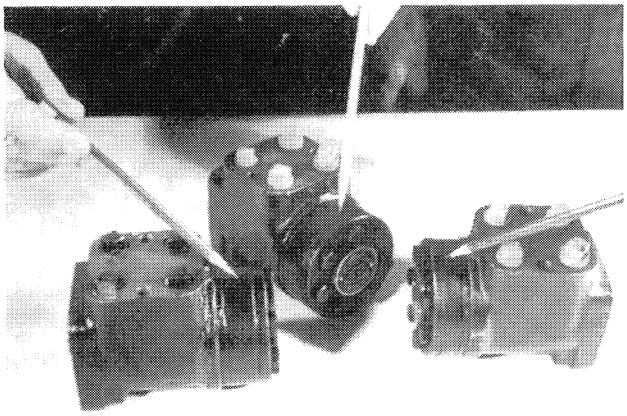

Figure 13

Figure 13 - Orbitrol Units Identification

There are three different Danfoss Orbitrol Steering Units that you may become involved with. Part No. K924898 (Danfoss Part No. OSP 100) was used on the early Hydrostatic Steering Units. The K923968 (Danfoss Part No. OSP 160) is used on currently manufactured David Brown tractors with the exception of the model 380 Utility Unit. The K946083 (Danfoss OSP 125) is used on the model 380 Utility Tractor. The only difference between the three (3) units is the width of the Orbit section as indicated by the pointers.

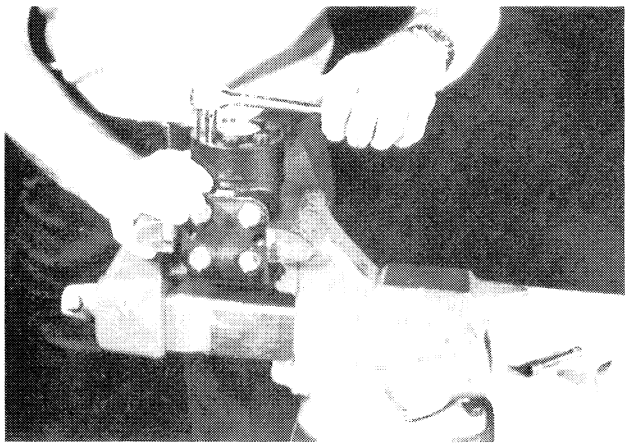

Figure 14

Figure 14 - Service of Units is Identical.

Regardless of the unit that you may be involved with, the servicing (teardown and rebuild) of the units is identical. The basic differences between the three units is the width of the orbit set and except for this area all parts are interchangeable between the three units.

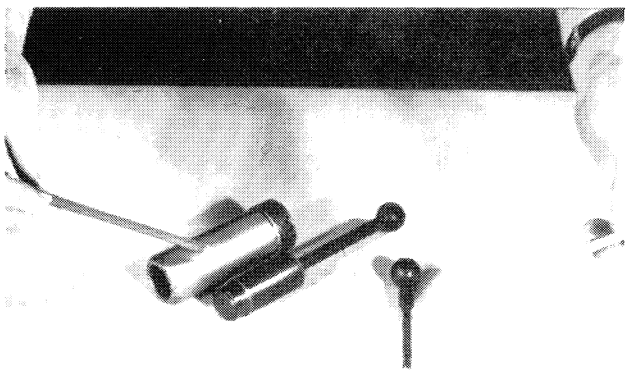

Figure 15

Figure 15 - Special Tools Required

There are only two special tools required for the servicing of the orbitrol units. One of these is the K964172 special tool used to install the Ken Ring seal and "O" Ring backup ring in the valve body. The other special tool is K964173 and is used to install the centering springs in the control spool. These special tools are in stock and available through the normal parts channels. If you have not already done so, it is suggested that you place an order immediately for these two special tools so that satisfactory repair of the orbitrol steering units will be assured.

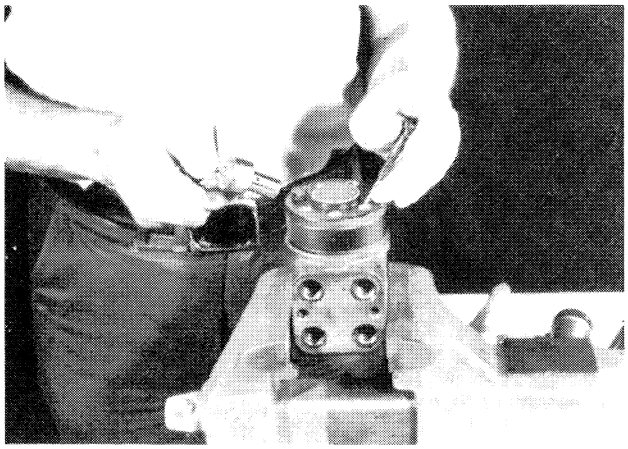

Figure 16

Figure 16 - Removal of Cap Screws

To begin the disassembly of the orbitrol unit, place in a vise as indicated and remove the seven cap screws from the end cap. You will observe that one of the cap screws is center drilled with a Roll Pin installed. When re-assembled it must be installed in the same port from which it was removed. The sealing washers on the seven cap screws must be discarded as new sealing washers will be provided in the seal kit.



Figure 17

Figure 17 - Removal of Pump Section

After removal of the seven cap screws, the end plate, the orbit set, the spacer and valve plate can be removed. Remove the "O" Rings and discard as new "O" Rings must be installed when the unit is reassembled. The "O" rings are provided in the seal kit.

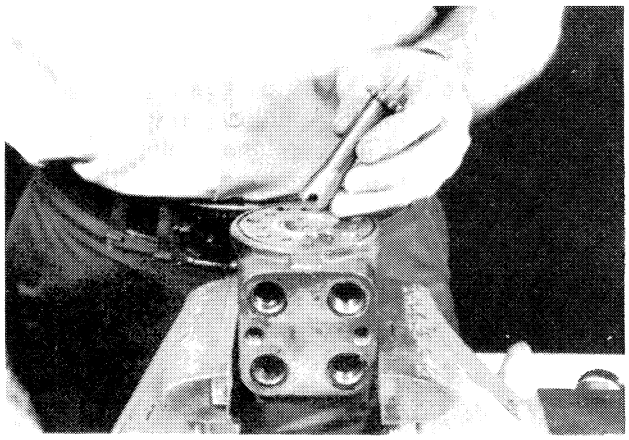

Figure 18

Figure 18 - Drive Shaft Removal

The drive shaft can now be removed as indicated.

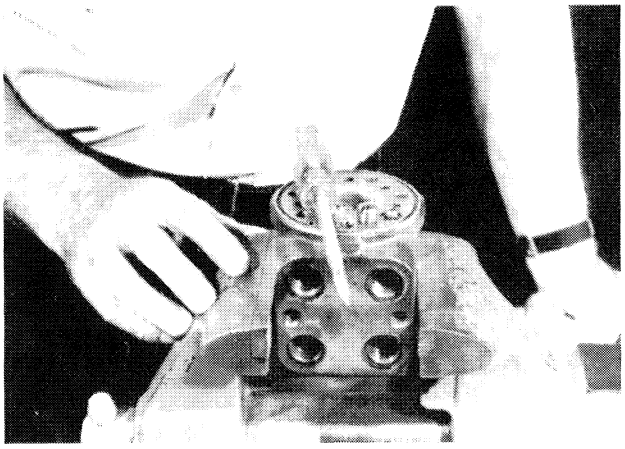

Figure 19

Figure 19 - Removal of Threaded Bushing and Check Ball.

Remove the threaded bushing and steel ball from the port as indicated. During reassembly they must be reinstalled in the same port. The steel ball is a check ball and prevents power oil from returning to sump when the engine is running and yet provides for manual steering when the engine is off.

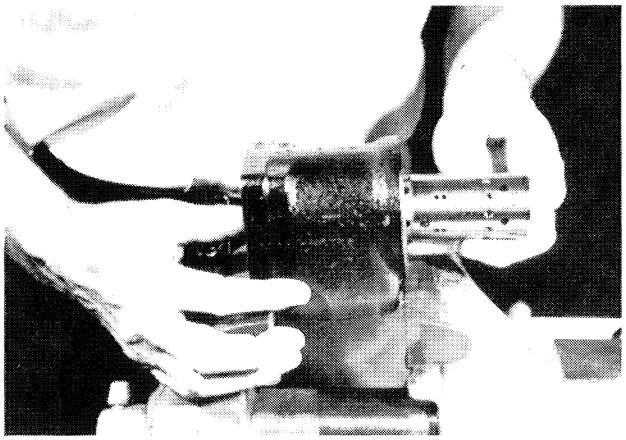

Figure 20

Figure 20 - Removal of Control Members.

Remove the valve spool and sleeve, as shown, by pushing it out. If scoring of the valve spool and sleeve in the housing is evident, the degree of scoring will be indicated by the difficulty incurred in removing the spool and sleeve. Do not push against the flat Welch plug seal inside of the spool as it will be damaged.



Figure 21

Figure 21 - Removal of Bearing Parts

The axial washer, bearing, bearing race, and centering springs retaining ring removed from the valve body with the valve spool and sleeve can now be removed from the valve spool and sleeve. Observe the location of these various parts in relationship to each other so that reassembly will be made easier.

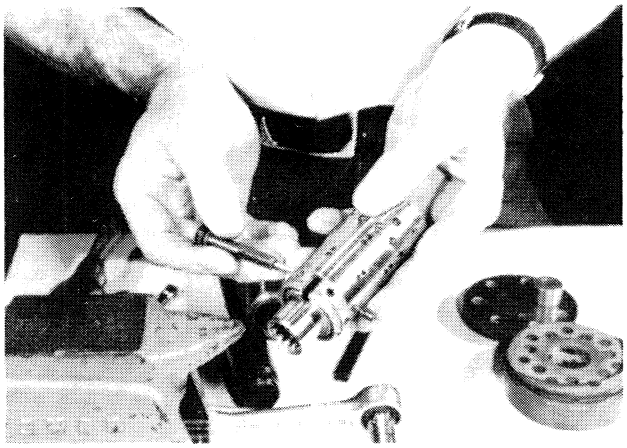

Figure 22

Figure 22 - Removal of Drive Pin

Remove the drive pin from the valve spool and sleeve. This can be accomplished most readily by using the cap screw with the roll pin inserted in the end of it as a tool to push the pin out.

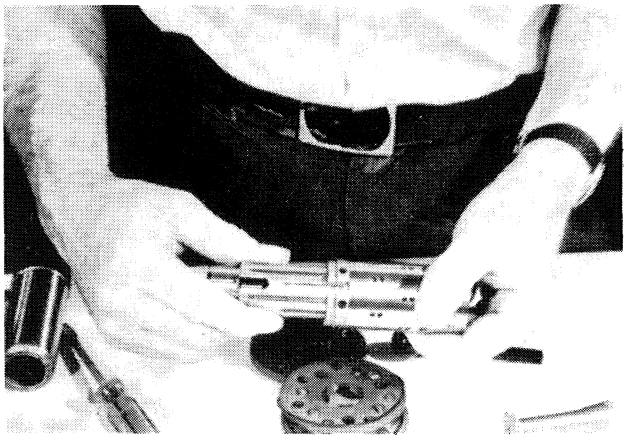

Figure 23

Figure 23 - Removal of Spool From Sleeve

The valve spool and sleeve can now be separated by pushing the spool out of the sleeve in the direction of the centering springs.

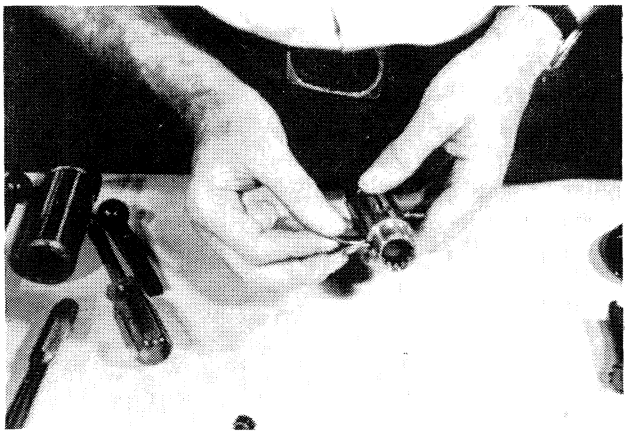

Figure 24

Figure 24 - Removal of Centering Springs

With the spool and sleeve separated the centering springs can be removed from the valve spool. The six centering springs may be reused when the valve is reassembled, however, if one or more of the springs are broken or damaged then a complete set of six springs must be installed.

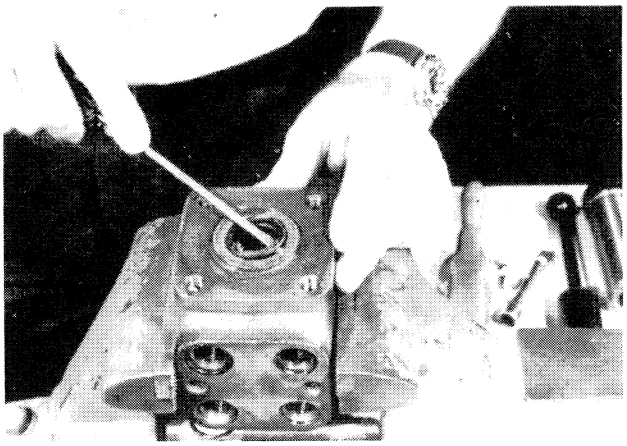

Figure 25

Figure 25 - Removal of Lip Seal

The valve spool shaft seal can be removed by prying out with a screw driver or other blunt instrument, however, care must be exercised to insure that the seal seat in the housing is not damaged.



Figure 26

Figure 26 - Removal of Shaft Oil Seal

Next, remove the "O" ring and Ken ring seal from the valve body. These will be replaced on reassembly. This cut away housing shows the position of "O" ring and Ken ring in the housing.

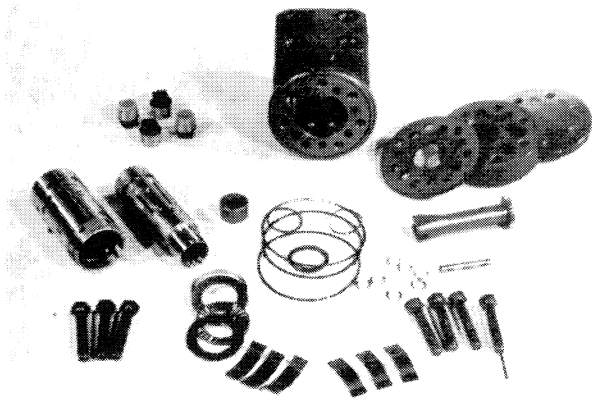

Figure 27

Figure 27 - Parts Displayed

The valve is now completely disassembled and the parts ready for inspection. All parts are to be carefully cleaned and washed in clean parts washing solution. After washing, the parts are to be carefully inspected and damaged or worn parts replaced before reassembly.

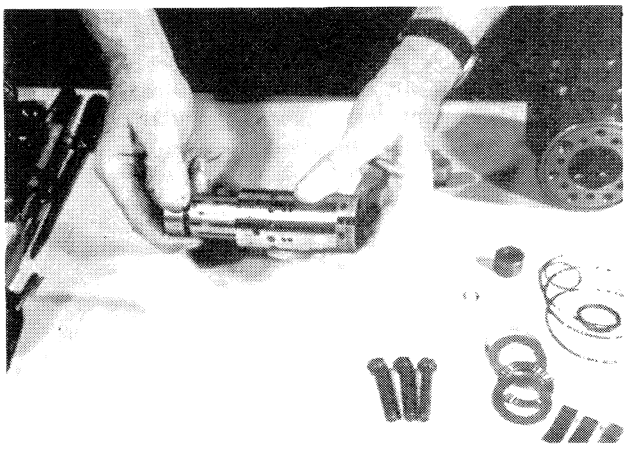

Figure 28

Figure 28 - Assembly of Spool and Sleeve

Before reassembly of individual parts, make sure that they are lubricated with TCH oil. To start reassembly of the orbitrol control unit the first step is to assemble the control valve spool and sleeve. The fit between these two mating parts is very close, as indicated previously, therefore perfect alignment is required during reassembly. If the spool is chilled in a refrigerator or deep freeze prior to reassembly, it will ease the fitting of these two parts. As the control valve spool and sleeve is assembled together it will be necessary to make sure that the centering spring slots are aligned.

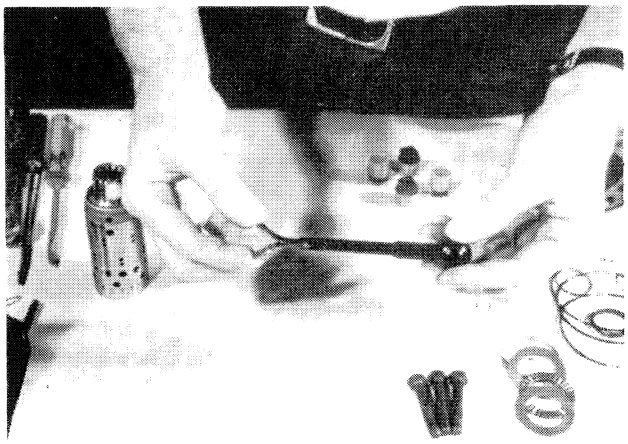

Figure 29

Figure 29 - Springs Installed in Special Tool

The centering springs may now be installed in the control valve spool and the sleeve. Shown here is the position of the six centering springs in the K964173 special tool for clarification purposes.

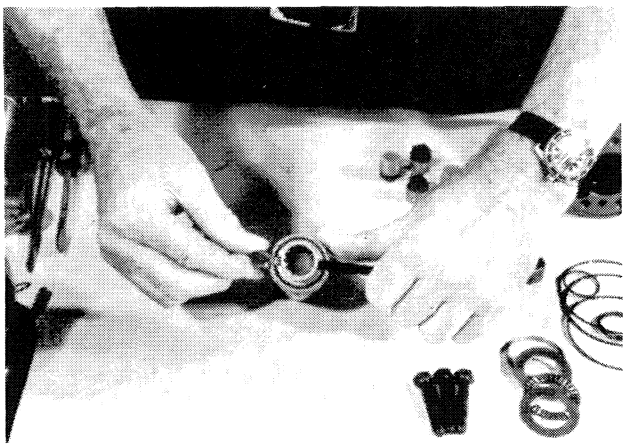

Figure 30

Figure 30 - Assembly of Centering Springs

Here is shown the actual installation of the centering springs into the control valve spool and sleeve. Insert the special tool into the centering spring slot in the control spool and sleeve and insert the centering springs in the slot of the tool. Using finger pressure compress the ends of the springs opposite the special holding tool and slide the springs into the control spool and sleeve as the special tool is pushed out.



Figure 31

Figure 31 - Assembly of Drive Pin

At this point the cross pin (drive pin) should be pushed through the control valve spool and sleeve until it is flush with the sleeve.

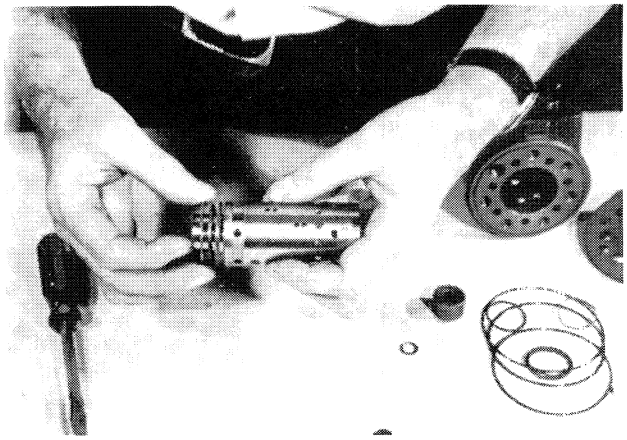

Figure 32

Figure 32 - Installation of Bearing Components.

Install the ring, bearing race, needle bearing and axial washer onto the control valve spool shaft in the same order in which they were previously removed. The I.D. Chamfer on bearing race must face away from the bearing. At this point the control valve spool and sleeve with ring and bearing components can be placed in a refrigerator unit for chilling to aid installation into the housing in a larger operation.

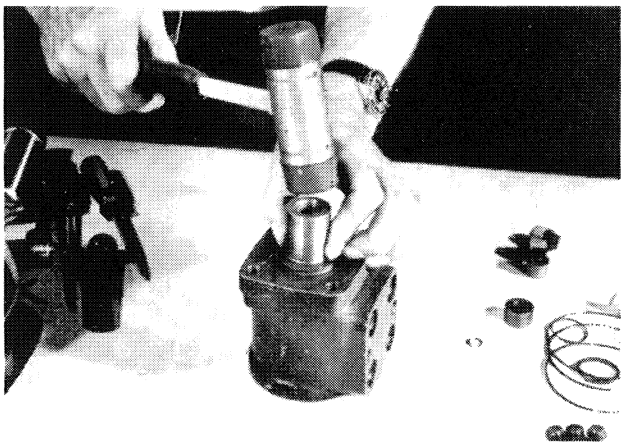

Figure 33

Figure 33 - Installation of Lip (Dust) Seal

Using a suitable driver, install the lip seal with lip to the outside.



Figure 34

Figure 34 - Use of Grease To Protect "O" Ring

Coat the small "O" ring from the seal kit with a long fiber grease similar to wheel bearing grease.

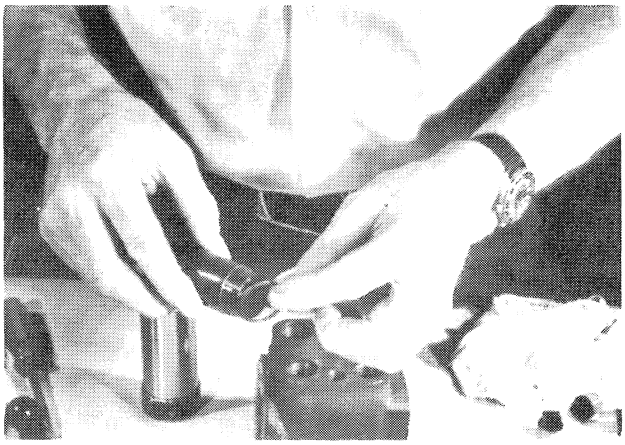

Figure 35

Figure 35 - Preparation for Installation Ken Ring Seal

Mount the "O" ring on the O.D. of the Ken ring after coating with long fiber grease and mount both "O" ring and Ken ring on special tool No. K964172 as shown. Make sure that seat area for Ken ring on special tool is smooth with no raised edge or difficulty will be encountered in the installation of the Ken ring and "O" ring.

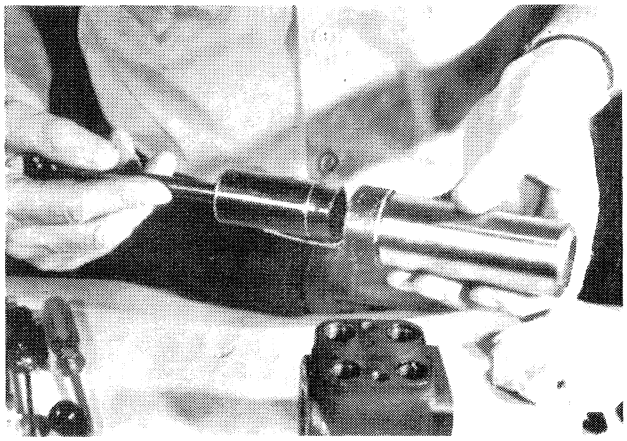

Figure 36

Figure 36 - Installing Spindle in Sleeve

Install the special tool spindle with "O" ring and Ken ring in place into the sleeve of the special tool.

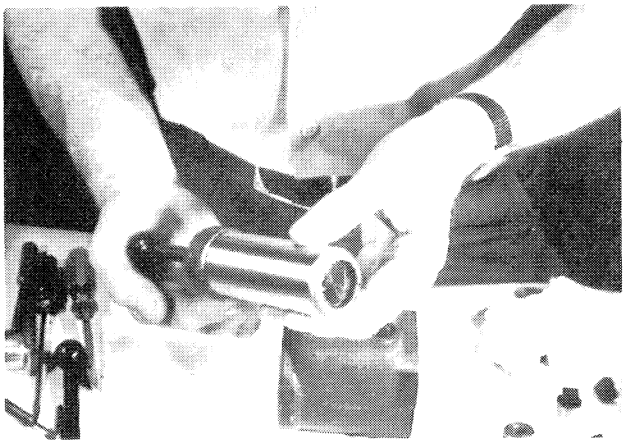

Figure 37

Figure 37 - Positioning Spindle in Sleeve

Insert the spindle into the sleeve until a firm resistance is met. At this point the special tool is ready to be inserted into the orbitrol unit housing.

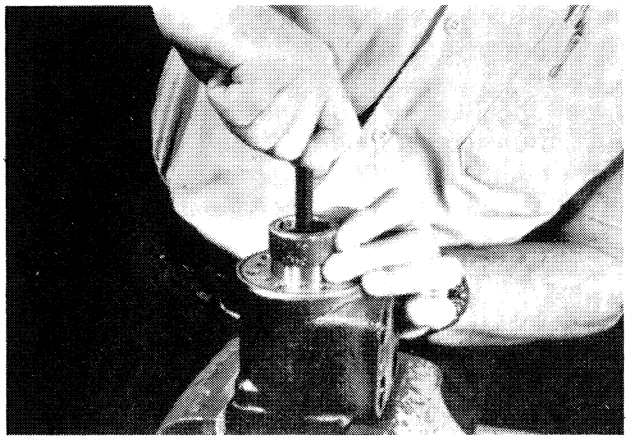

Figure 38

Figure 38 - Installation of Shaft Ken Ring Seal

Clamp the orbitrol housing in a vise as shown and insert the special tool until the sleeve bottoms in the housing. Press the spindle into the housing with a rotating motion until the "O" ring seats in the orbitrol housing. Remove the spindle and sleeve of the special tool.

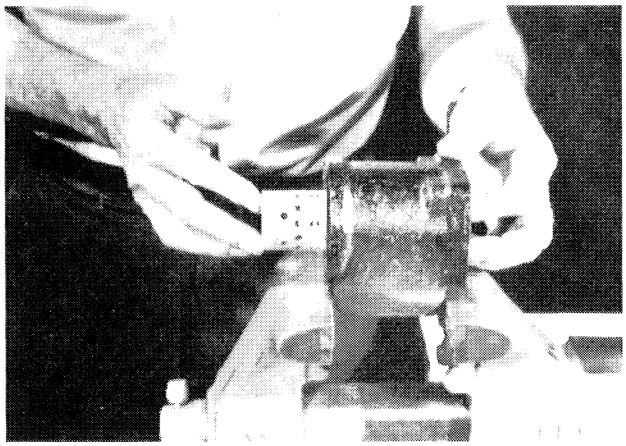

Figure 39

Figure 39 - Assembly of Control Assembly into Housing.

Clamp the housing in the vise as shown and install the control valve spool and sleeve assembly, with the bearing assembly, into the housing. Perfect alignment is required because of the close fitting parts. If the assembly was previously chilled in a refrigerator or deep freeze, the assembly will be made somewhat easier.

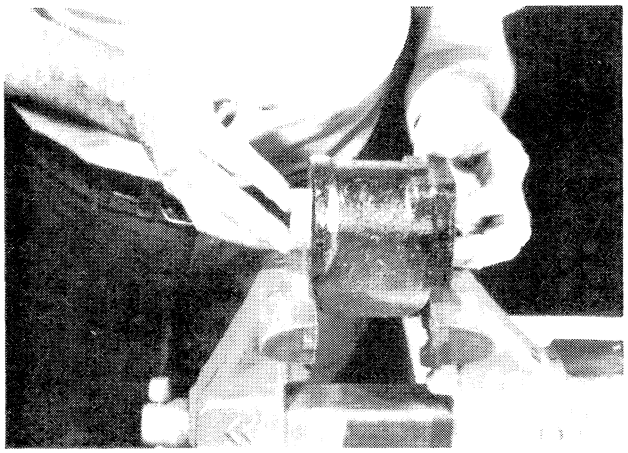

Figure 40

Figure 40 - Installing Spool Shaft Through Ken Ring.

Rotate the assembly as it passes through the Ken ring to prevent rolling the Ken ring. Make sure that drive pin is at right angles to machine surface where hoses attach. This is necessary for timing of the orbit rotor.



Figure 41

Figure 41 - Installing Check Ball

Install the non return valve (check ball) into the orbitrol housing in the same port from which it was removed. This is the port that will accept the special cap screw and roll pin in the final assembly operation. Tighten the threaded bushing down snugly but do not try to over torque.

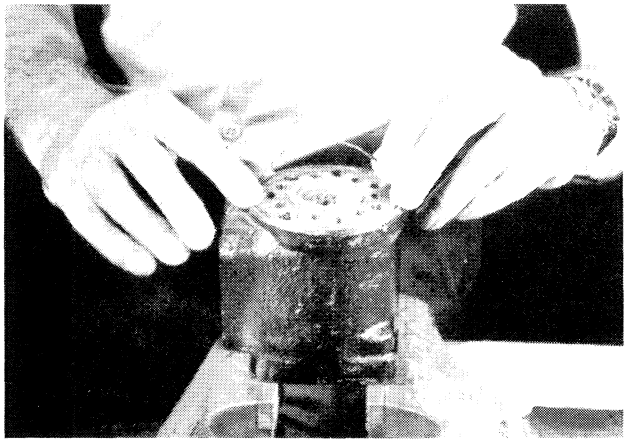

Figure 42

Figure 42 - Installing "O" Ring Seal (Housing)

Install the larger diameter "O" ring onto the orbitrol housing.

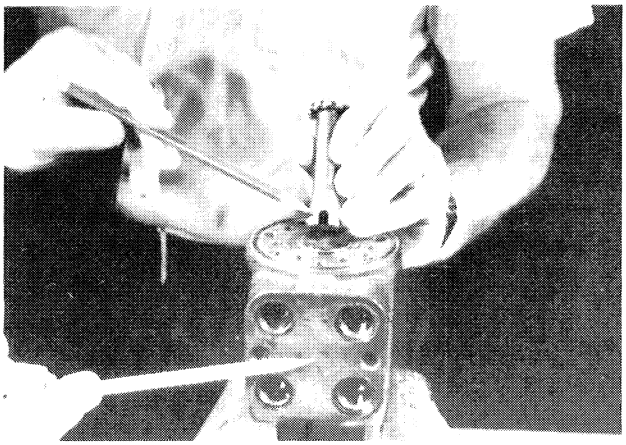

Figure 43

Figure 43 - Installation of Drive Member

Install the drive member making sure that the drive slot is at right angles to the connecting flange for the power steering hoses. Care must also be exerted at this point to make sure that the cross pin is in position to receive the slot of the driving member. It may be necessary to rotate the control valve spool and sleeve to obtain engagement of the slot and the cross pin.

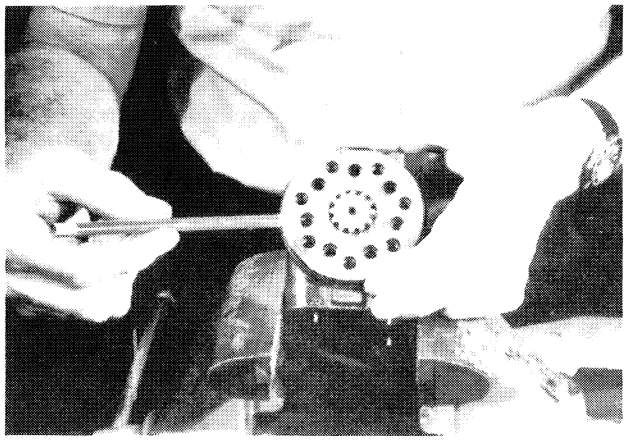

Figure 44

Figure 44 - Valve Plate Installation

The valve plate is mounted so that the canals (ports) line up with corresponding ports in the housing. Position the drive member so that the splines are resting on the valve plate.

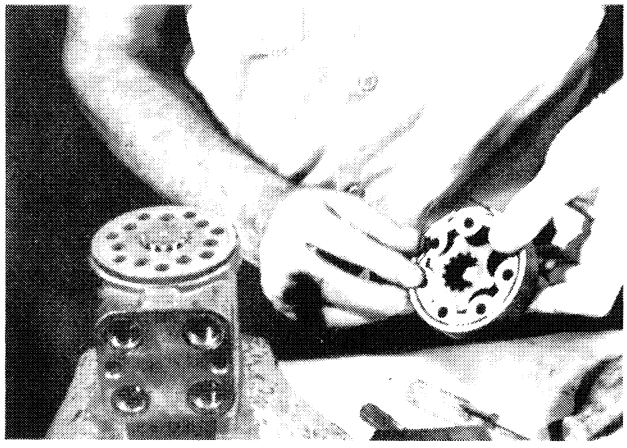

Figure 45

Figure 45 - Install Orbit Set Seals

Mount the two remaining large diameter "O" rings, one on each side of the orbitrol set.

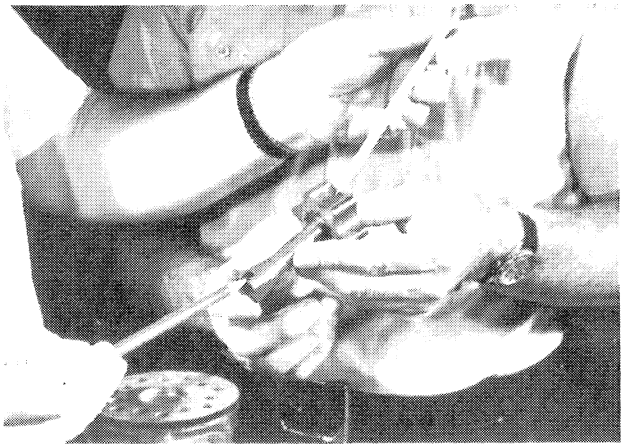

Figure 46

Figure 46 - Timing of Orbit Rotor

The orbitrol set is now installed on top of the valve plate engaging the drive splines of the drive member in such a way that one of the vallies in the rotor lines up with the cross pin slot in the drive shaft as indicated here. This is the procedure that is utilized to time the rotor section to the control valve and spool. If the orbit set rotor is installed on the drive member out of time, the tractor will steer to the left when turning the steering wheel to the right or will steer to the right when turning the steering wheel to the left. Once installed turn the outside ring of the orbit set until the seven bolt holes line up.



Figure 47

Figure 47 - Installation of Spacer.

Install the spacer on top of the drive member in the orbit set. The spacer retains the drive member in its correct position in the orbitrol unit.

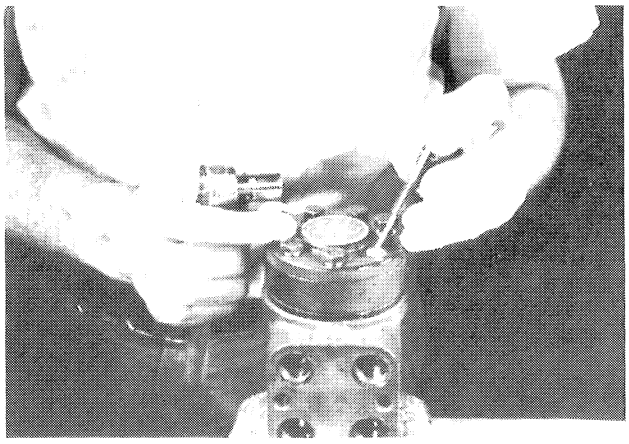

Figure 48

Figure 48 - Installation of Cap Screws

Install the end cap so that the seven cap screw holes line up. Install new sealing washers from the seal kit on each of the seven retaining cap screws and install them through the end cap. Make certain that the special cap screw with the roll pin is installed into the port that contains the threaded bushing.

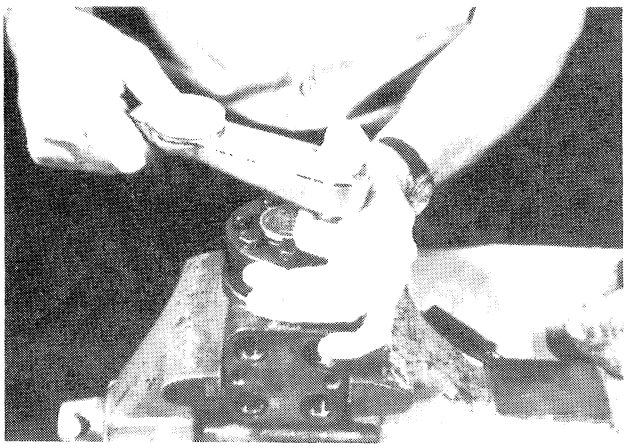

Figure 49

Figure 49 - Torquing of Cap Screws

Torque the seven cap screws evenly to 240 inch pounds. The reassembly of the orbitrol unit is now complete.

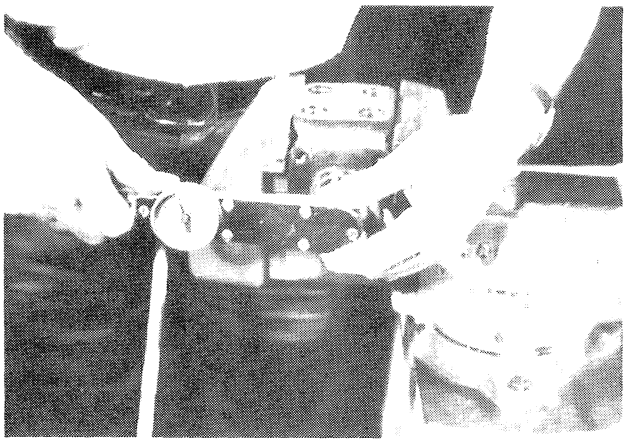

Figure 50

Figure 50 - Final Testing After Repairs

After reassembly of the unit is complete it will be necessary to test the unit to insure that the repair was correctly performed. With the orbitrol unit loosely, though safely secured in a vise, as illustrated, apply a torque to the spline sleeve. The applied torque must not exceed 175 in./lbs. for the K924898 orbitrol unit or 220 in./lbs. for the K923968 orbitrol unit. If the sleeve does not rotate it indicates that the unit is partially seized due to dirt or faulty assembly. The inlet and outlet ports should not be sealed while this test is being performed.

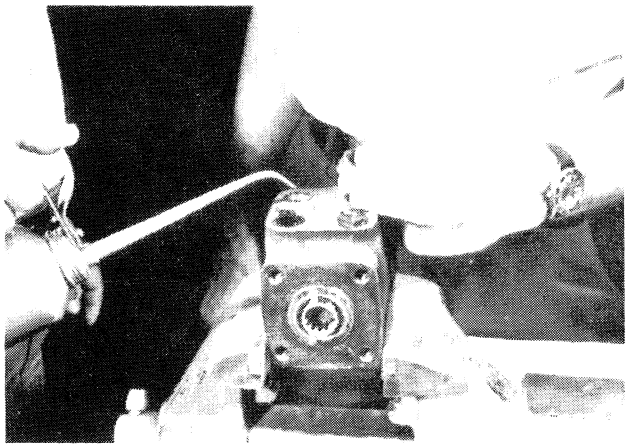

Figure 51

Figure 51 - Fill With Oil and Plug Ports

After the preceeding test, fill the unit through the four oil ports with TCH oil and plug the oil ports with "K" plugs. This is particularly important if the unit is to remain in storage for a period of time after the repairs have been completed.

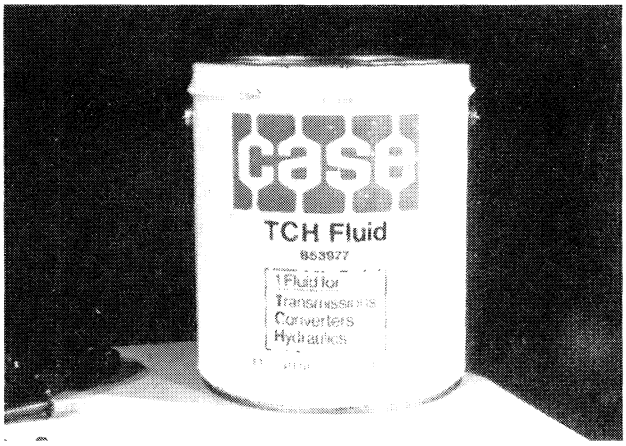

Figure 52

Figure 52 - Oil Recommendation.

This concludes the disassembly, reassembly, and servicing of the orbitrol steering control unit. Before it is put back into the steering system, it is important that the system be flushed out to remove all contaminants, install a new oil filter and new, clean oil in the reservoir. The correct oil for use in the steering system is Case TCH oil and is available through regular parts channels.



Figure 53

Figure 53

This service information would not be complete without an explanation of warranty coverage on the orbitrol steering unit. With the release of this service program concurrent with the availability of required repair parts and the release of the two special service tools, warranty will no longer be considered on complete orbitrol units, unless this would be the most economical course to take. Warranty will be considered only on those parts within the orbitrol unit that are found to be defective and the labor required in the replacing of these defective parts. Where failures occur as a result of contamination due to improper customer preventative maintenance, no warranty credit consideration is applicable.

NOTE: The CASE CORPORATION reserves the right to make improvements in design or changes in specifications at any time without incurring any obligation to install them on units previously sold.

FRONT AXLE AND STEERING

SELECTAMATIC TRACTORS

CASE CORPORATION

Pub 9-37191

PRINTED IN U.S.A.

CONTENTS

SECTION	Page
Front Axle and Steering	
Front Wheel Alignment	1
Front Hubs	1
Stub Axles	3
Front Axle	4
Steering Box	8
Power-Assisted Steering	
Operation	15
Maintenance and Service	16
Fault Finding	17
Repair Operations	19
Hydrostatic Power Steering	
Operation	33
Operation of Servo Valve	34
Maintenance and Service	35
Fault Finding	36
Repair Operations	37
Dimensional Data	40
Summary of Design Changes	43

FRONT AXLE AND STEERING

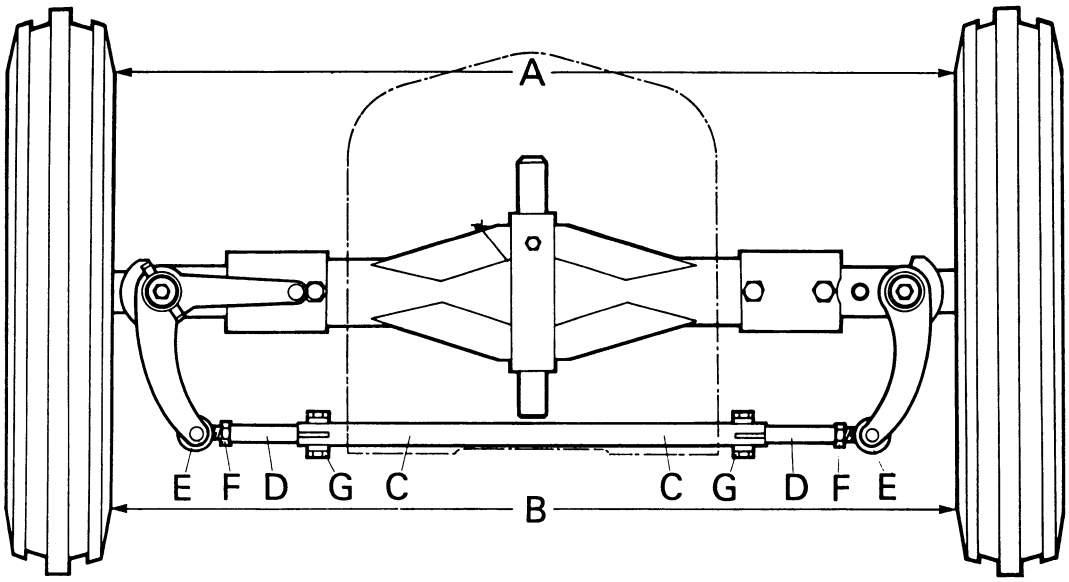

Figure 1. FRONT WHEEL ALIGNMENT

A Front distance B. Rear distance C. Track rod tube D. Track Rod
E. Ball joint F. Locknut G. Clamp bolt

Front Wheel Alignment

The front wheels should be set so that they have $\frac{1}{16}$ to $\frac{1}{8}$ in. (1·6 to 3·2 mm) toe-in when in the straight-ahead position. (Fig. 1). This setting is determined by the length of the track rod and if the track rod is disturbed, or if incorrect wheel alignment is suspected, the setting should be checked by measuring the distance between the wheel rims at points level with the wheel centres and parallel to the centre-line of the front axle. The distance between the front of the rims should be $\frac{1}{16}$ to $\frac{1}{8}$ in. (1·6 to 3·2 mm) less than the distance between the rear of the rims, and if incorrect may be adjusted by screwing a ball joint further in, or out, of the track rod. As both ball joints have right-hand threads releasing the locknuts and turning the track-rod tube will not alter the length of the track-rod. To alter the track-rod length it is necessary to release a locknut, remove one of the track-rod clamp bolts and turn only half the track rod, so that only one ball joint is screwed further in, or out, as required. After resetting the track-rod length, replace the clamp bolt, tighten the locknut, then recheck the wheel alignment.

As the track-setting holes in the track rod are drilled the same distance apart as the holes in the beam extension, wheel alignment is not altered when the wheel track is changed. If the wheel alignment is correct at one track setting it will remain correct at all track settings.

Front Hubs

Hub Removal: Jack up the front of the tractor and place suitable supports under the axle beam extensions. Remove the front wheels, centre cover and split pins. Unscrew stub axle nuts—these are both right-hand thread—and pull the hubs off the stub axles. The bearings will be removed with the hub and it will be necessary to lever out the oil seal to remove the inner bearing.

Oil Seals: As the presence of dirt or water in the front hub would cause rapid bearing failure a seal is fitted in the inner face of the hub. The main purpose of this seal is to prevent dirt reaching the bearing—not to prevent lubricant escaping from the hub — so it is essential that the seal is fitted with the lip towards the centre of the tractor. The seal therefore prevents dirt entering the hub but allows excess lubricant to escape. A discharge of lubricant past the seal is not, therefore, detrimental but desirable, as this ensures that the cavity between the seal and metal dirt excluder is kept free of abrasive matter which would quickly damage the seal (Fig. 2).

When a tractor is fitted with front-wheel brakes, the brake back-plate prevents dirt reaching the seal, and the seal should therefore be fitted the opposite way round, i.e., the lip facing away from the centre of the tractor so that lubricant cannot escape from the hub and contaminate the brake linings. Because the seal retains lubricant in the hub it is important that when front-wheel brakes are fitted the hubs are lubricated very sparingly, otherwise pressure build-up in the hub, due to an excessive amount of lubricant, will force the seal lip tightly against the collar and cause ultimate seal failure (Fig. 3).

Hub Bearings: After removing both bearing inner tracks, clean out the inside of the hub and examine the bearings. If the surface of the rollers or

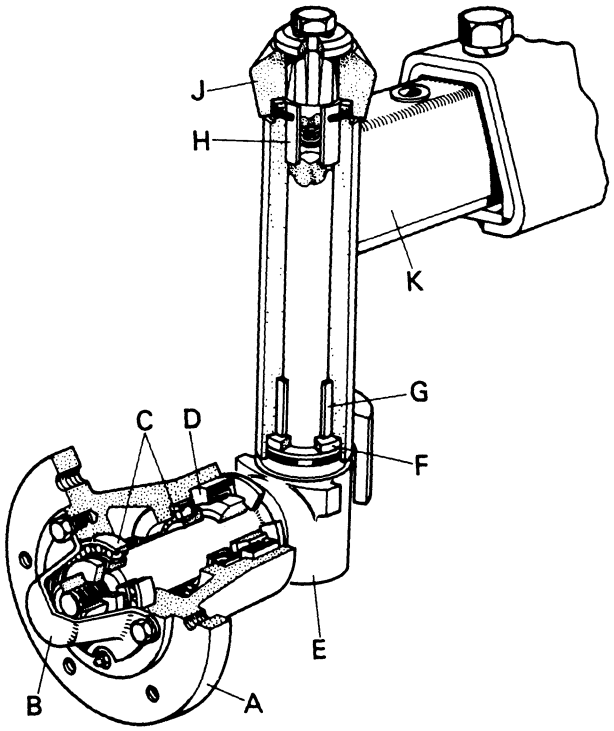

Figure 2.
FRONT HUB AND STUB AXLE

A. Front hub
B. Hub cover
C. Hub bearing
D. Oil seal
E. Stub axle
F. Thrust washer
G. Lower bush
H. Upper bush
J. Steering lever
K. Beam extension

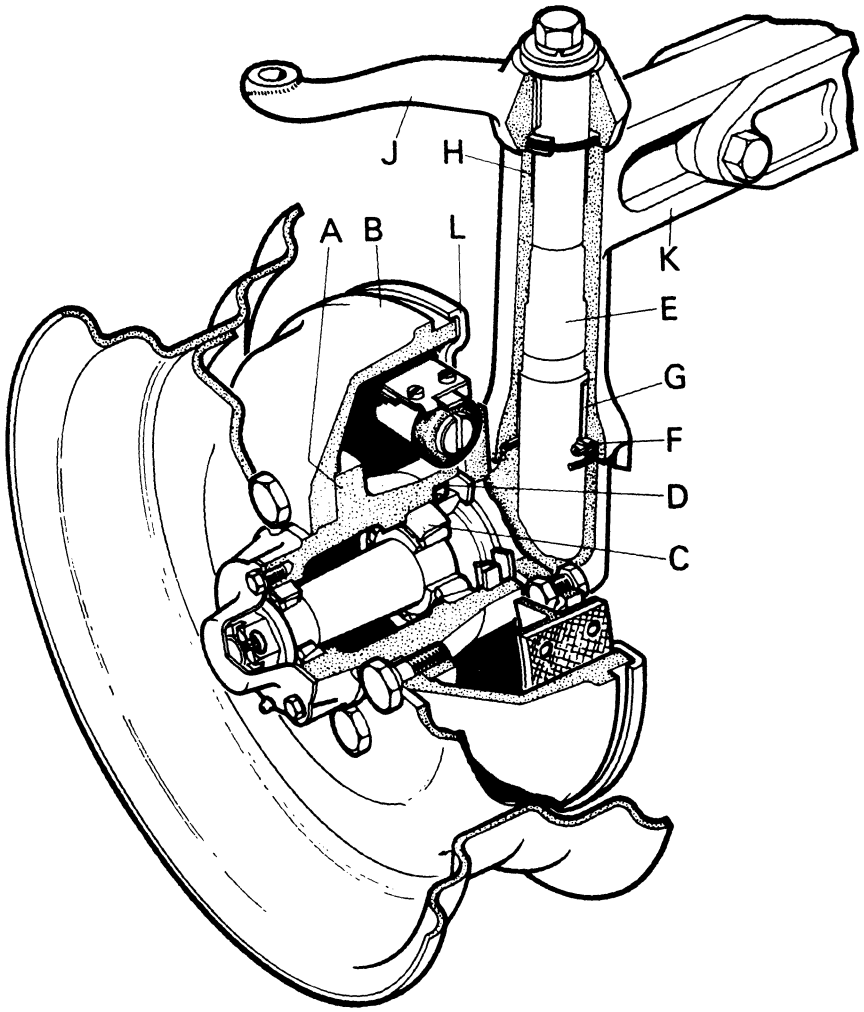

Figure 3. FRONT HUB
WITH FRONT BRAKES

A. Front hub
B. Brake drum
C. Hub bearing
D. Oil seal
E. Stub axle
F. Thrust bearing
G. Lower bush
H. Upper bush
J. Steering lever
K Beam extension
L. Brake backplate

bearing tracks is pitted or worn the bearings should be renewed. It is not necessary to renew both bearings if one is serviceable, but it is essential that the complete bearing is renewed. The outer track should therefore be driven out of the hub and the track supplied with the new bearing pressed into position — thinnest edge of track towards the outside of hub — until it is firmly in the hub recess.

Refitting the Hubs: Replace the inner bearing and press a new seal into position, using a flat plate so that the seal is pressed in evenly all round. Position the seal so that the lip is facing outwards (unless front brakes are fitted, when it should face inwards).

Pack the inside of the hub with clean grease and replace it in position on the stub axle, taking care that the oil seal lip slides on to the seal collar, and replace the outer bearing. Fit the large flat washer and nut. Rotate the hub whilst firmly tightening the nut, so that the bearings are fully seated, then slacken the nut back one flat and fit a split pin. Replace the cover and pump grease through the nipple until the hub is filled and grease begins to escape past the seal.

Stub Axles

The stub axles pivot in steel-backed bushes in the beam extensions and are retained in position by the steering lever.

Steering Lever Removal: Raise the front end of tractor and place supports under the front axle beam extensions. Remove the wheels and the steering-arm bolts then temporarily refit the steering-arm bolts without washers. Screw the bolts finger-tight then unscrew two full turns only and, with a solid support under the beam extension, strike the bolt a sharp blow squarely on the head. This will release the steering lever from the taper on the stub axle and allow the stub axle to be removed when the bolt is unscrewed.

Stub Axle Bushes: Two stub axle bushes are pressed into each beam extension and these should be renewed if worn. Drive the bushes out with a suitable drift taking care not to damage the bush locations. When fitting new bushes, clean the components and remove any burrs from the axle bores. Press the new bushes into position using a mandrel made to the dimensions shown in Fig. 4. If a mandrel is used the bushes will not be damaged during fitting, and reaming will not be necessary.

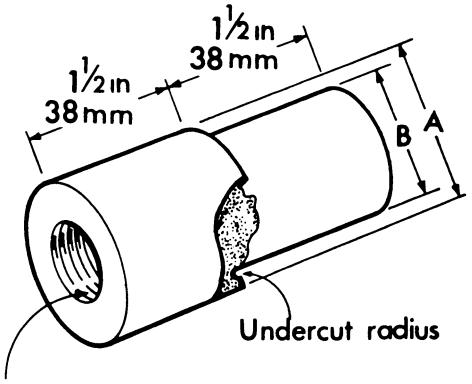

Figure 4. DETAILS OF BUSH MANDRELS

The following mandrels will be found useful for removing and replacing steering bushes:

A	B
Mandrel No. 1	
1·120 in. (28·45 mm)	0·995 in. (25·27 mm)
Mandrel No. 2	
1·370 in. (34·80 mm)	1·245 in. (31·62 mm)
Mandrel No. 3	
1·495 in. (37·97 mm)	1·370 in. (34·80 mm)
Mandrel No. 4	
1·620 in. (41·15 mm)	1·495 in. (37·97 mm)
Mandrel No. 5	
1·870 in. (47·50 mm)	1·745 in. (44·22 mm)

Thrust Washers and Seals: Model 1200 Tractors, and 990 and 880 Tractors with heavy duty front axles, are fitted with roller thrust bearings. These bearings are fitted with a steel washer at each side and, as two different types of bearings are supplied, ensure that the correct washers are used (Fig. 6). The bronze thrust washers fitted on other tractors do not require steel backing washers.

Always fit new thrust washers and sealing rings when fitting new bushes.

Steering Stops: Front wheel movement is limited by means of the stops on the beam extensions. If the stops become worn, remove the extension and build the stops up to the original shape with welding (Fig. 7). If the steering-box reaches the end of its travel before the stub axles touch the stops a heavy impact against the front wheels may damage the steering box casting.

Refitting the Stub Axles: Clean the stub axle and fit a new sealing ring. Smear the thrust

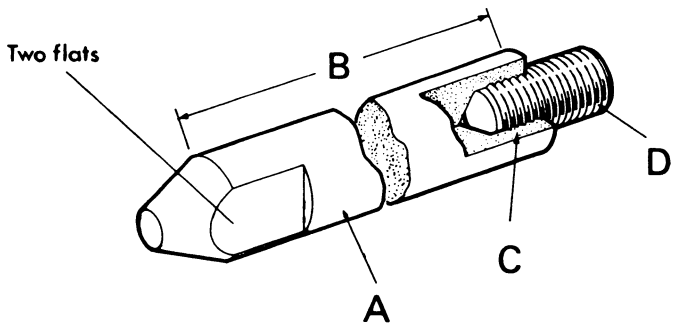

Figure 5. HOLDER FOR BUSH MANDREL

A. Mild Steel bar 1 in. (25 mm) dia.
B. 12 in. (30·5 mm)
C. ⅝ UNC × ¾ in. (19 mm) deep
D. Stud, ⅝ UNC × 1½ in. (38 mm)

washers with grease then fit on the stub axle. Smear the inside of the axle bushes with oil and fit a new sealing ring; fit the stub axle into the beam and replace the steering lever. Ensure that the lever is fitted on the correct splines and the special thick washer is fitted on the bolt, then tighten the bolt to 120 lb ft (16·6 kg metres). Lubricate with SAE 140 oil by applying a grease gun to the nipple on the front of the axle extension.

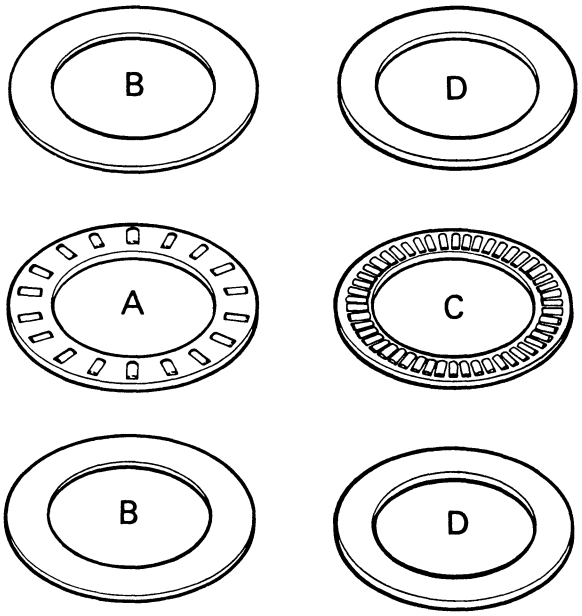

Figure 6. ROLLER THRUST BEARINGS

A. Bearing 620180 (INA AXK4565)with
B. Thrust washers 626692, 0·39 in. (1 mm) thick
C. Bearing 620184 (Torrington NTA284) with
D. Thrust washers 626859, 0·060 in. (1·5 mm) thick

Front Axle

Fabricated axles are standard fitting on all models, but heavy duty forged axles are an optional fitting on 990 and 880 Tractors. On 1200, 990 and 880 Tractors the front axle trunnion pin is fitted from the rear end of the main frame extension and to remove the front axle it is necessary to remove the extension from the main frame in order to extract the trunnion pin (Fig. 9). On 780 and 770 Tractors, the front axle trunnion pin is fitted from the front of the main frame and the front axle can readily be removed.

Front Extension Removal — 1200 Tractors: Drain the cooling system and remove the bonnet top. Remove the battery and bonnet front. Remove air cleaner with supports, disconnect hoses and lift off radiator. Drain the transmission oil — if this is to be re-used ensure that it is drained into a clean container. Remove the bolts attaching the pump driveshaft coupling to the crankshaft pulley and slide the coupling on the shaft. Disconnect the pump pipe connections and remove the bolts from the pump support bracket so that the pump can be removed complete with bracket and driveshaft. Remove the pump inlet pipe and disconnect the pressure pipe at the connection underneath the clutch housing. Seal both pipe connections to prevent the entry of dirt.

Raise the front end of tractor and remove front wheels. Disconnect drag link from the left-hand steering arm and turn the drag link rearwards out of the way. If the tractor is fitted with power-assisted steering, disconnect the ram from steering arm and tie the ram to the tractor so that the pipe connections are not strained. Lower the tractor on to supports placed under the front main frame. *Do not* place supports under the engine sump as this is a steel pressing. Using a crane to support the weight of the axle and front extension, remove the bolts and nuts attaching front extension to main frame then draw the extension forward clear of the main frame.

Front Extension Removal — 990 and 880 Tractors: Remove bonnet and drain cooling system. Remove battery, air cleaner and support brackets. Disconnect the hoses and remove radiator.

Raise front end of tractor and remove front wheels. Disconnect drag link from the left-hand steering arm and turn the drag link rearwards out of the way. If the tractor is fitted with power-assisted steering, disconnect the ram from the steering arm then tie the ram to tractor, so that the pipe connections are not strained. Lower tractor on to supports placed under the front main frame. *Do not* place the supports under the engine sump as this is a steel pressing. Using a crane to support the weight of the axle and front extension, remove the bolts and nuts attaching front extension to main frame then draw the extension forward clear of the main frame.

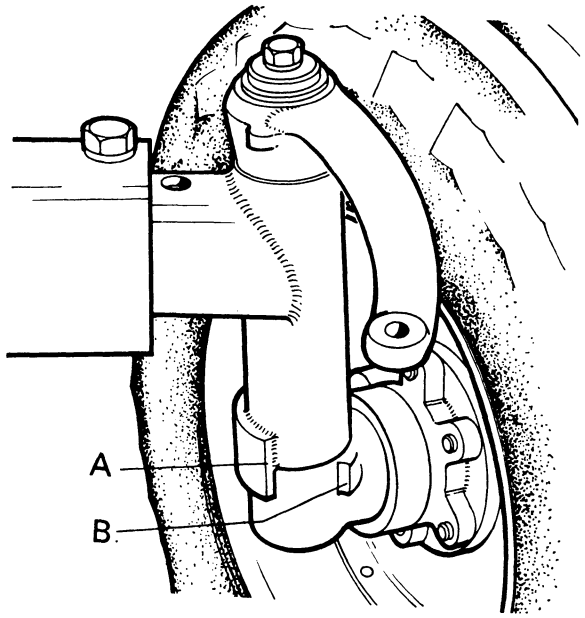

Figure 7. STEERING STOPS

A. Beam extension stop B. Stub axle stop

Trunnion Pin Removal — 1200, 990 and 880 Tractors: Cut the locking wire and remove the bolt attaching trunnion pin to axle beam. The nut

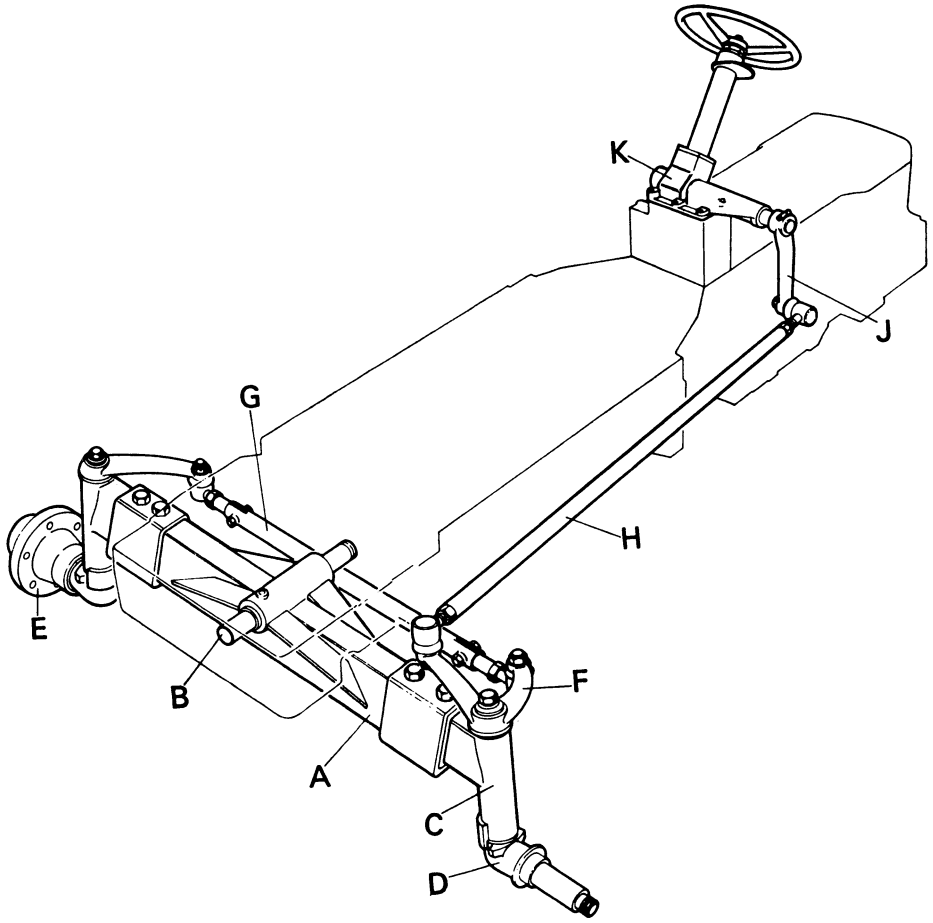

Figure 8. FRONT AXLE AND STEERING MECHANISM

A. Front axle beam
B. Trunnion pin
C. Beam extension
D. Stub axle
E. Front hub
F. Steering lever
G. Track-rod tube
H. Drag link
J. Drop arm
K. Steering box

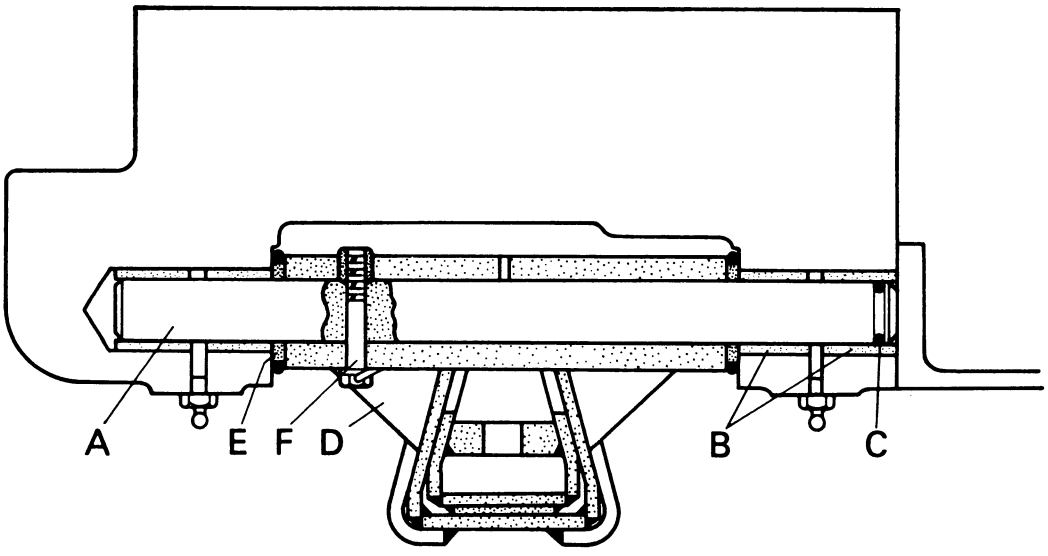

Figure 9. TRUNNION PIN MOUNTING — 1200, 990 and 880 (later type)

A. Trunnion pin
B. Bush
C. 'O' ring
D. Axle beam
E. Thrust washer
F. Retaining bolt

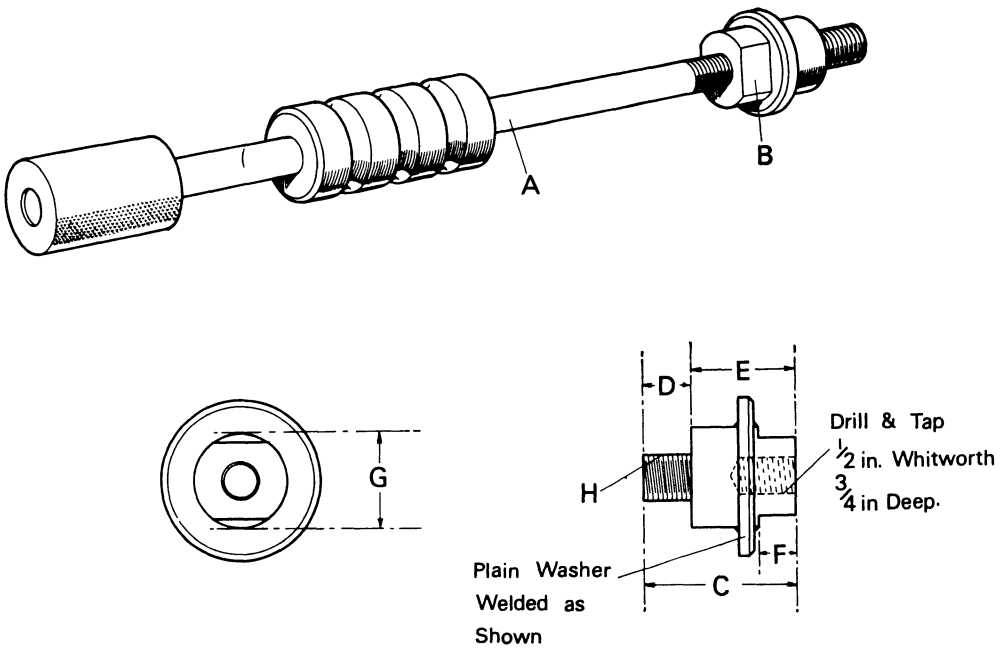

Figure 10. TRUNNION PIN REMOVAL TOOL

A. Slide hammer (Service Tool 4235A)
B. Adaptor
C. 2 in. (50·8 mm)
D. $\frac{5}{8}$ in. (19·9 mm)
E. $1\frac{3}{8}$ in. (34·9 mm)
F. $\frac{1}{2}$ in. (12·7 mm)
G. $1\frac{1}{4}$ in. (31·7 mm) — 1200, 990 and 880; 1 in. (25·4 mm) — 780 and 770
H. $\frac{5}{8}$ UNC thread — 1200, 990 and 880; $\frac{1}{2}$ UNC thread — 780 and 770

is in the form of a threaded bush which is knurled on the outside so that it is prevented from turning by the axle beam, but is pulled through the beam and tightened against the pin: the conical end of the sleeve tightening against the hole in the trunnion pin to lock the pin and beam together (Fig. 9).

Turn the extension over and lay it on the floor. Extract the trunnion pin, using a slide hammer and adaptor (Fig. 10) screwed into the $\frac{5}{8}$ UNC tapped hole in the trunnion pin. Use the crane to support weight of axle when withdrawing the trunnion pin then lift the axle clear of the extension.

Trunnion Pin Removal — 780 and 770 Tractors: Remove bonnet, disconnect steering drag link and turn rearwards out of the way. If power-assisted steering is fitted disconnect ram from the left-hand steering lever then tie the ram to tractor, so that the pipe connections are not strained.

Using a jack under front axle, raise the tractor and remove front wheels. Place suitable supports under main frame, positioned as far forward as possible but clear of the front axle. Remove trunnion-pin locking bolt from axle beam and, using a sharp punch, lever the welch plug out of front extension. With the weight of tractor resting on the supports and the jack supporting the weight of the axle only, pull the trunnion pin out of frame with a slide hammer and adaptor (Fig. 7) screwed into the $\frac{1}{2}$ UNC tapped hole in the trunnion pin. When the trunnion pin has been extracted, lower the axle and draw it forward clear of tractor.

Trunnion Pin Bushes: The bushes may be driven out with a suitable sized mandrel, but where the bushes are in a blind hole they must be collapsed by driving a small round-nose chisel down the side of the split and then extracted with a pair of pliers (Fig. 11).

Fitting New Bushes: If the bores in the extension are free from burrs and scratches, the outside of bushes smeared with thin oil, and a correct diameter mandrel (Fig. 4) used to press the bushes into position, it will not be necessary to ream the bushes after fitting.

On 1200, 990 and 880 Tractors position the bushes so that the splits will be towards the bottom, or no load position, when installed, then press the bushes in as shown in Fig. 9.

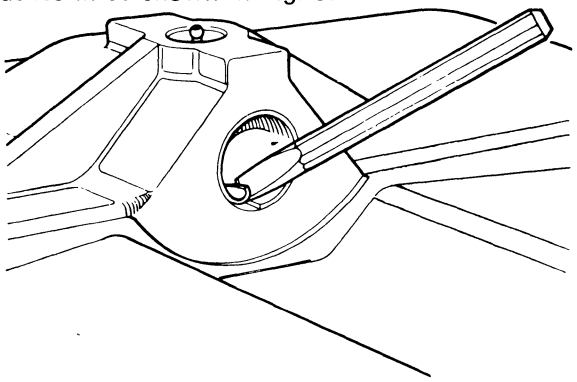

Figure 11. REMOVING TRUNNION PIN BUSH FROM BLIND HOLE

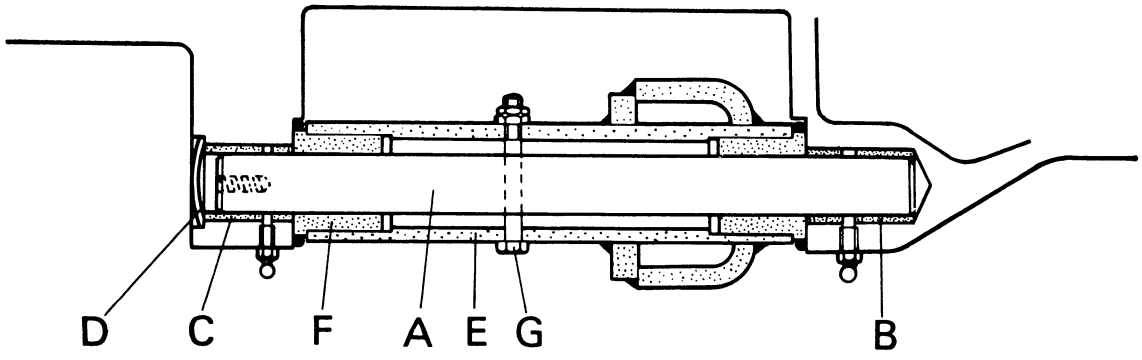

Figure 12. TRUNNION PIN MOUNTING — 780–770

A. Trunnion pin
B. Rear bush
C. Front bush
D. Welch plug
E Centre beam
F. Thrust sleeve
G. Retaining bolt

On 780 and 770 Tractors the bushes are of different lengths — shortest at the front — and must be positioned so that the hole through the bush is opposite the grease nipple (Fig. 12).

Front Axle Trunnion Tube: The fabricated centre beam of the standard axle is a welded assembly and individual parts are not supplied separately.

On early 990 and 880 Tractors thrust sleeves were fitted between the trunnion pin and axle tube but on later tractors the diameter of the tube bore was reduced and the pin fitted directly into the tube, with thrust washers in place of sleeves (Fig. 13).

All 780 and 770 Tractors are fitted with thrust sleeves on the trunnion pin but early 770 Tractors were fitted with $\frac{3}{4}$ in. (19·05 mm) sleeves and when fitting new sleeves to these tractors the depth of the axle counter bore should be increased so that the $1\frac{1}{2}$ in. (38·09 mm) long sleeves can be fitted.

Refitting Front Axle: Refit the axle in the reverse order of removal, noting the following points.

Renew the sealing rings and thrust washers. Different thicknesses of thrust washers are available for 990 and 880 Tractors with heavy duty axles, and the washers used should be so thick that it is necessary to lever the two beams together in order to fit the front washer in place (Fig. 14) giving a pre-load of 0·060 in (1·52 mm).

Smear the inside of the bushes with grease and carefully align the axle with the bush bores, so that the trunnion pin can be tapped into position without damaging the bushes.

Position the trunnion pin so that the bolt-hole is in line with the bolt-hole through the beam. On

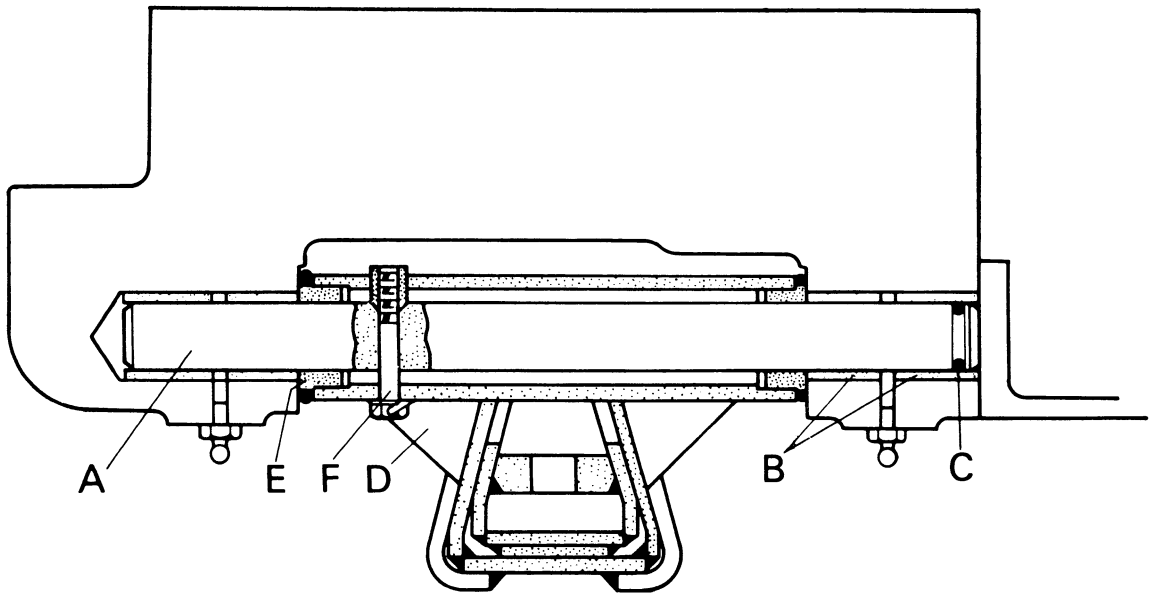

Figure 13. TRUNNION PIN MOUNTING — 990–880 (Early Type)

A. Trunnion pin
B. Bush
C. 'O' ring
D. Axle beam
E. Thrust sleeve
F. Retaining bolt

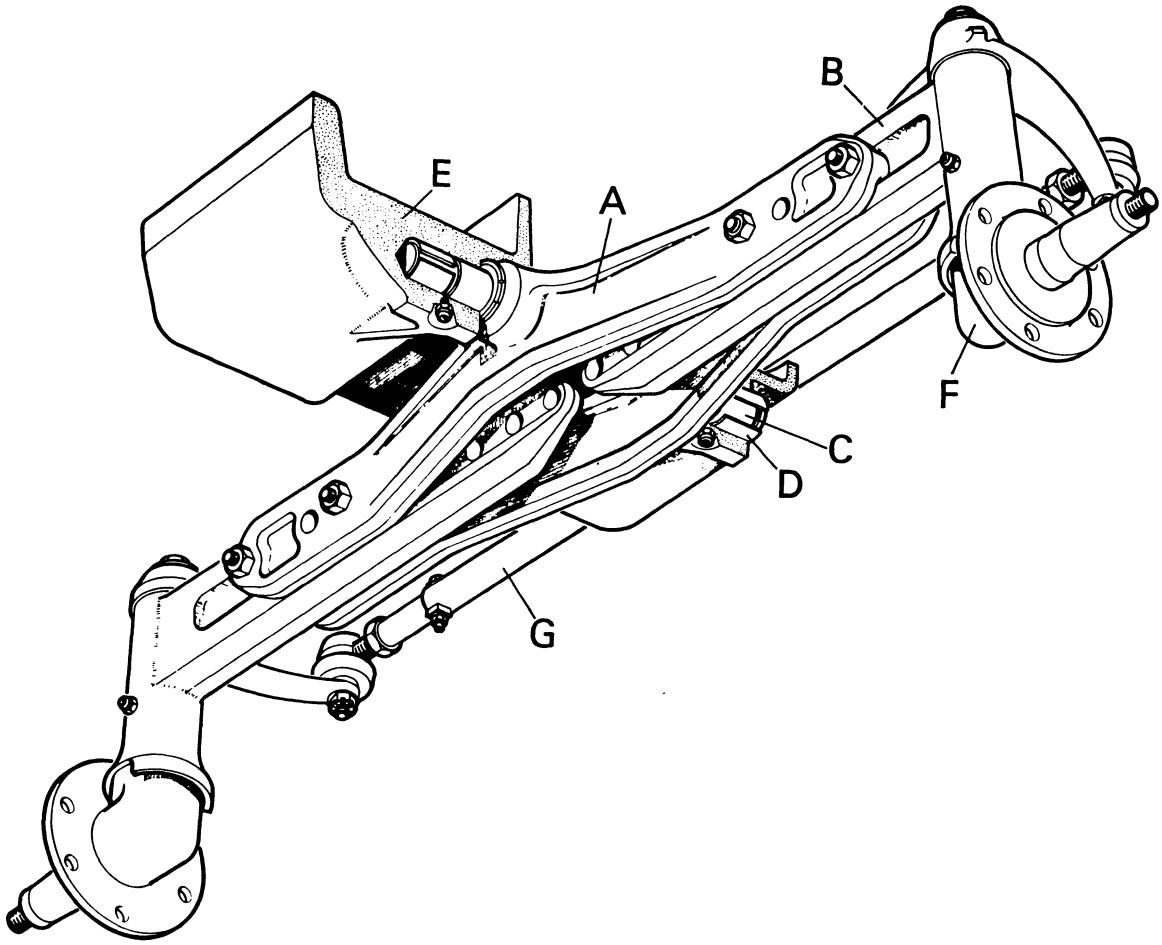

Figure 14. HEAVY DUTY FRONT AXLE — 990–880

A. Centre beam B. Beam extension C. Trunnion pin D. Bush
E. Frame extension F. Stub axle G. Track-rod tube

1200, 990 and 880 Tractors firmly tighten this bolt then lock with wire, but on 780 and 770 Tractors the bolt should not be very tight as this may distort the beam tube: screw the first nut finger-tight then hold it with a spanner and firmly tighten the locknut against it.

Wipe the main frame and extension faces clean before refitting and tighten the bolts to 75 lb ft (10·5 kg metres) on 1200 Tractors, or 50 lb ft (6·9 kg metres) on 990 and 880 Tractors.

When reassembling the pipework on the 1200 tractor, new 'O' rings must be used and if necessary renew the inlet hoses.

Priming the Hydraulic Pump — 1200 Tractors: When re-assembly is complete and the transmission refilled with *clean oil,* slacken the pump pressure pipe union — this is under the right-hand side of the clutch housing — and start engine. Allow oil to leak out of the union for two or three seconds then stop the engine and fully tighten the union.

Steering Box

A recirculating ball-type steering box is fitted to all models. The box case is bolted to the gearbox cover and lubricated by an oil bath formed in the cover casting.

Drop Arm Removal: On 1200, 780 and 770 Tractors the drop arm fits on taper splines on the cross shaft and is retained in position by a bolt in the centre of the shaft. As the arm is very tight on the shaft it is essential to remove the arm with an extractor. Remove the bolt and large flat washer then refit the bolt without washer: tighten the bolt then unscrew two full turns. Use a two-jaw extractor to grip the arm and tighten the jacking screw against the bolt head until the arm is pulled free.

On 990 and 880 Tractors the drop arm is fitted on parallel splines and retained by a clamp bolt. To remove the arm it is therefore only necessary to remove the clamp bolt then slide the arm off the shaft serrations.

Before removing a drop arm always note the marking (Fig. 15) so that the arm can be refitted in the same position.

Steering Box Removal: *Caution* — Do not commence steering box removal by removing the four bolts from the base of the steering column and turning the steering wheel: this will turn the screw out of the nut and allow the steel balls to drop into the oil bath.

1200 Tractors: Remove bonnet top and drain the oil from steering box: drain plug on left-hand side of gearbox cover. Remove the instrument panel complete with fuel tank.

990 Tractors: Disconnect the throttle control and remove the hand throttle lever.

990 and 880 Tractors: Remove bonnet and remove the two rear bolts attaching fuel tank support brackets to clutch housing. Raise the instrument panel — allowing tank to pivot on the front bolts then temporarily refit the rear bolts under the brackets — to hold the rear of the tank clear of the steering-box bolts.

Disconnect drag link from drop arm and remove the bolts attaching steering box to gearbox cover. Remove steering box, complete with column and steering wheel, taking care of the two ring dowels fitted between the box and cover.

Removing the Steering Column: Lay the box on bench and remove the four bolts from the ball pegs. Remove ball pegs, taking care of the shims, then remove the four bolts from steering column flange. Remove column assembly from the box and secure the nut to the screw with adhesive tape — to prevent the nut being turned to the end of the screw and releasing the steel balls (Fig. 16).

Removing the Drop Arm Shaft: On 1200 Tractors the drop arm must be removed and also the cover and thrust plates. Remove the two clamp bolts from shaft fork then tap the drop arm end of shaft with a soft-faced hammer. Take care not to damage the end of the shaft and turn rocker arm frequently so that the end bush will be pushed evenly out of the

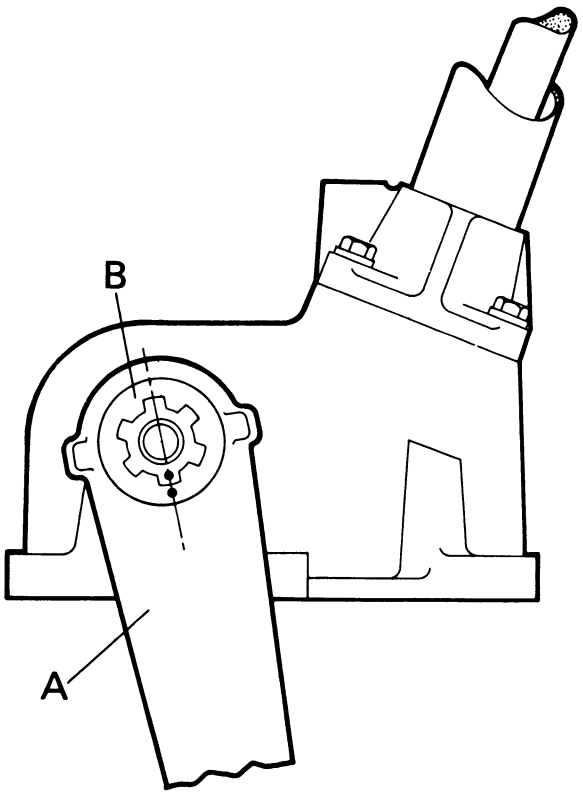

Figure 15. DROP ARM AND CROSS SHAFT MARKING
A. Drop Arm B. Cross shaft

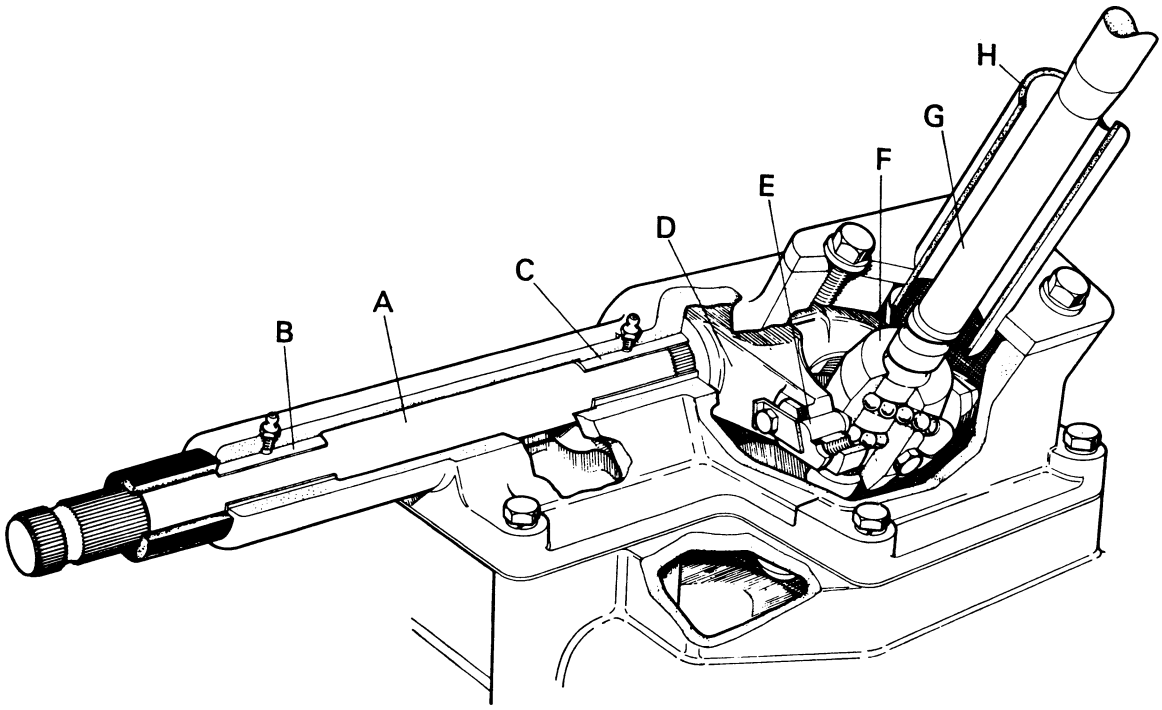

Figure 16. STEERING BOX — 990–880

A. Cross shaft
B. Outer bush
C. Centre bush
D. Rocker arm
E. Ball peg
F. Nut
G. Shaft
H. Column

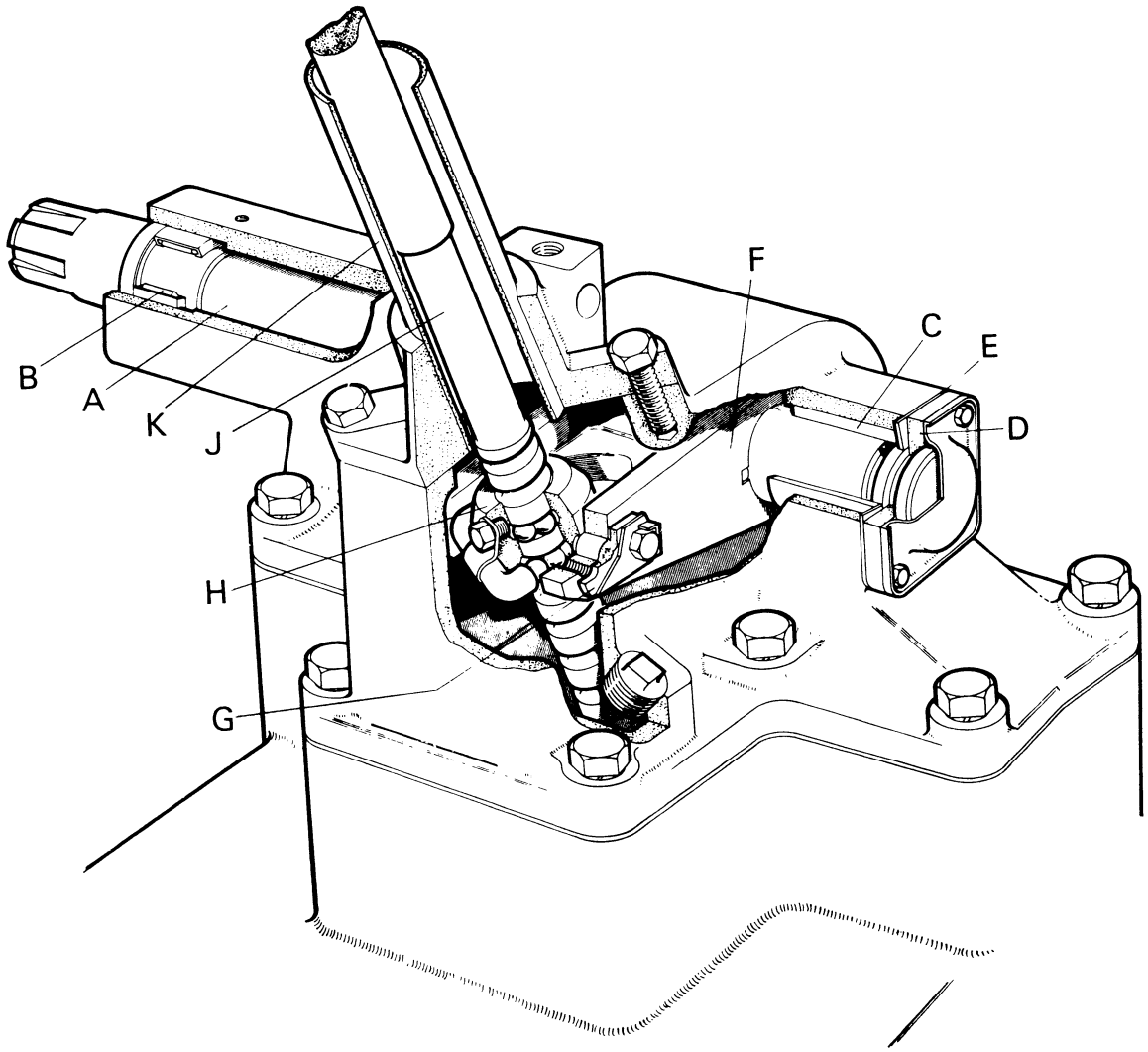

Figure 17 STEERING BOX — 1200

A. Cross shaft
B. Roller bearing
C. Bearing bush
D. Thrust plate
E. Shims
F. Rocker arm
G. Ball peg
H. Nut
J. Shaft
K. Column

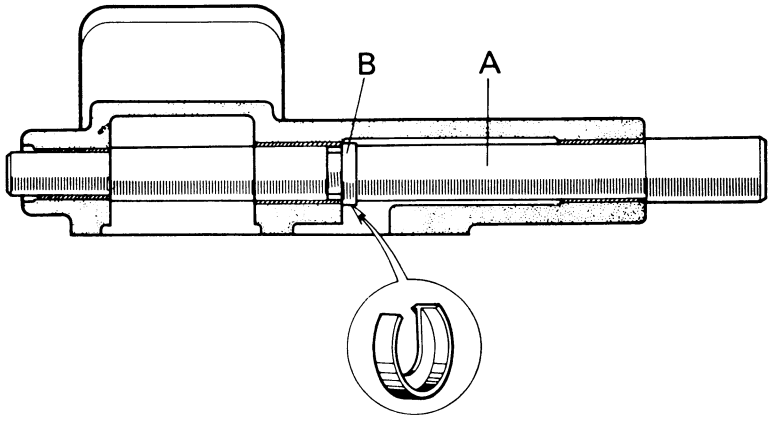

Figure 18. SERVICE TOOL 901724

A. Mandrel
B. Horseshoe

Figure 19.
PRESSING OUTER BUSH THROUGH CENTRE LOCATION

A. Service tool 901724
B. Outer bush
C Steering box

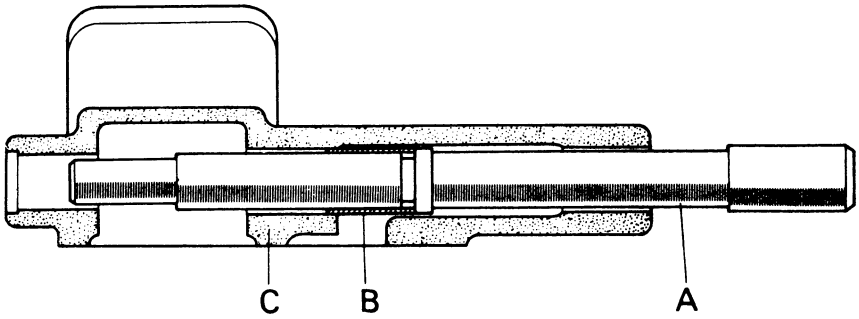

casting by the rocker-arm key. *Do not attempt to remove the shaft by using a drift against the thrust plate end of the shaft:* the rocker arm key will not pass through the drop-arm side of the box casting (Fig. 17).

On 990, 880, 780 and 770 Tractors the drop-arm shaft is retained in position by a large split pin through the rocker arm. To remove the shaft it is therefore only necessary to lever out the welch plug with a sharp punch, remove the rocker arm pin and then tap the shaft out, from the welch plug side, with a hammer and drift. The shaft can therefore be removed with the drop arm still attached.

Drop-Arm Shaft Bearings: On 1200 Tractors a needle roller bearing is fitted inside the drop-arm end of the case and this may be levered out with the oil seal. As the bearing will be damaged during removal, do not remove the bearing unless it is to be renewed.

On 990 and 880 Tractors three bushes are fitted in the box case and these can be removed with Service Tool 901724 (Fig. 18). Slide the special mandrel into the case and fit the horseshoe, recess towards large end of mandrel. Press the two inner bushes out then remove the horseshoe and withdraw the mandrel. Replace the horseshoe on the mandrel then press the outer bush through the centre bush location so that it will fall out when the mandrel is withdrawn (Fig. 19).

If Service Tool 901724 is not available the centre bush can be removed by making a collar to the dimensions shown in Fig. 20 and using this collar on mandrel No. 1.

On 780 and 770 Tractors there are only two bushes in the box case and these should be removed by pressing both bushes inwards. Service Tool 901724 can be used. Use the large end of the mandrel for the drop-arm side bush and the small end for the other side (Fig. 21).

Fitting New Drop-Arm Shaft Bearings: Fit new bushes in the reverse order of removal. Ensure that the case bores are free from burrs and scratches, smear the outside of the bush with oil and use a correct diameter mandrel, so that it will not be necessary to ream the bushes after fitting.

On 1200 Tractors use the mandrel shown in Fig. 4 to press the centre bush into the case and use the mandrel shown in Fig. 22 to fit a new needle bearing. Fit the bearing on to the mandrel so that the end of the bearing case which is stamped with the maker's number is against the mandrel shoulder, then *press* — do not hammer — the bearing into position.

On all tractors except 1200 use Service Tool 901724 to press the bushes into position, ensuring that the holes through the bushes are opposite the grease nipple holes in the case.

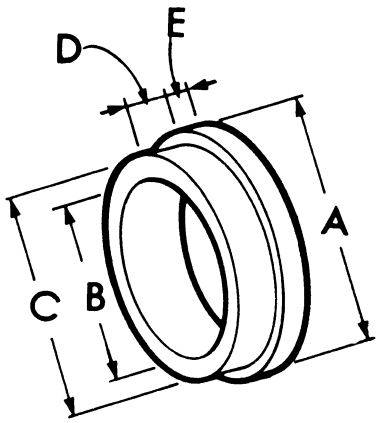

Figure 20. DIMENSIONS OF COLLAR FOR REMOVING INNER BUSH

A. 1 375 in. (3 49 mm)
B. 1·0 in. (25·4 mm)
C. 1 25 in. (3 17 mm)
D. $\frac{1}{4}$ in. (6 35 mm)
E. $\frac{1}{8}$ in. (3 17 mm)

Cross Shaft Replacement: Renew the cross shaft if it is worn or twisted: a twisted shaft will allow the rocker arm to foul the case and may cause damage.

Smear the inside of the bearings with grease, wipe the shaft clean and replace in the reverse direction of removal.

On 1200 Tractors fit the shaft key and place the rocker arm inside the case — positioned so that the clamp bolts can be fitted after the shaft has been replaced. Tighten the clamp bolts to 30 lb ft (14·15 kg metres) then fit an 'O' ring into the end of the shaft and replace the bush, thrust washer, shims and cover. Check that sufficient shims have been fitted

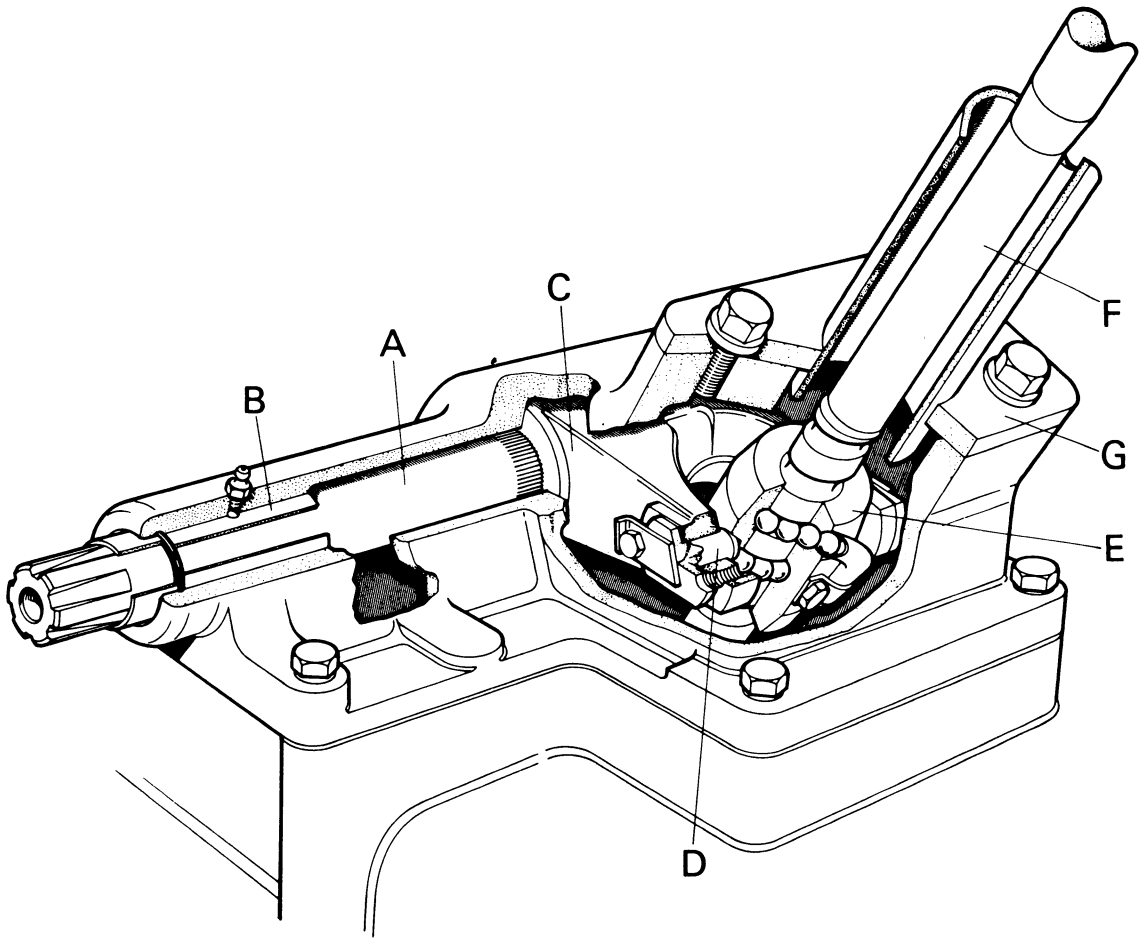

Figure 21. STEERING BOX — 780–770

A. Cross shaft
B. Bush
C. Rocker arm
D. Ball peg
E. Nut
F. Shaft
G. Column

to position the fork centrally under the column aperture then fit the cover bolts and tighten to 20 lb ft (2·76 kg metres).

On all tractors except 1200, place the rocker arm in the case — positioned with the split-pin hole on the opposite side of the case to the drop arm. If the drop arm is on the shaft ensure that the rubber shaft seals are in position then align the split-pin holes and push the shaft into the rocker arm and fit the split pin. Fit a new welch plug and apply a few shots of lubricant through the grease nipples.

Dismantling the Steering Column: First remove the steering wheel; this is fitted on a taper and may be drawn off after removing the domed nut and washer. Do not attempt to remove the wheel with a hammer as this will cause damage: use a three-jaw extractor which fits under the wheel boss.

Remove the wheel key from the shaft and unscrew the locknut. Remove the adjustable bearing cone then invert the column over a suitable container to catch the steel balls, and withdraw the screwed shaft out of the column (Fig. 23).

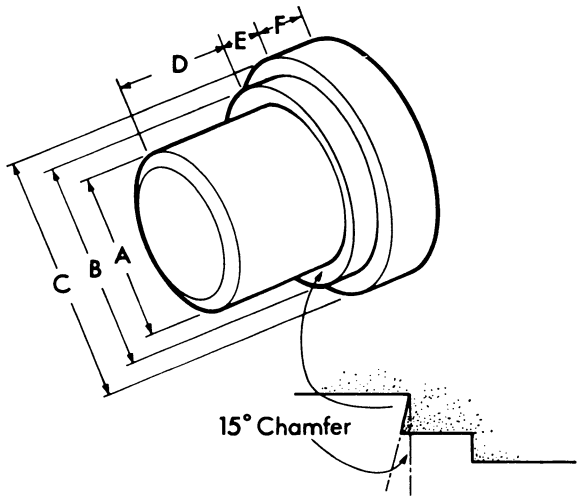

Figure 22. TOOL FOR FITTING NEEDLE ROLLER BEARING — 1200 TRACTORS

A. 1·45 in. (36·83 mm)
B. 1·87 in. (47·50 mm)
C. $2\frac{1}{8}$ in. (54·0 mm)
D. $1\frac{1}{4}$ in. (3·17 mm)
E. $\frac{5}{16}$ in. (7·94 mm)
F. $\frac{1}{2}$ in. (12·7 mm)

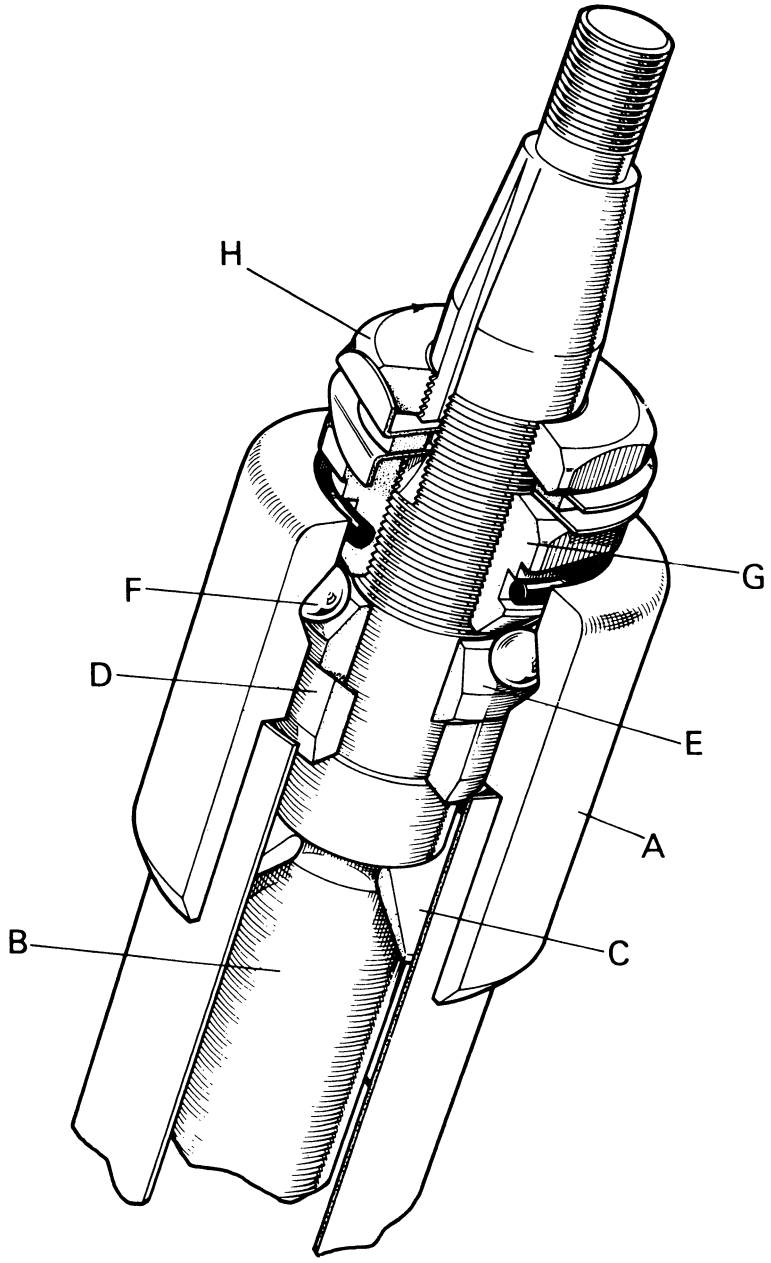

Figure 23.
STEERING COLUMN UPPER BEARING

A. Column
B. Shaft
C. Oil baffle
D. Spherical seat
E. Lower bearing cone
F. Steel balls
G. Adjustable bearing cone
H. Locknut

Remove the two bolts attaching guide tube to nut then unscrew the nut from shaft, catching the steel balls as they are released.

Assembling the Steering Column: Fit the rubber baffle, spherical seating and lower bearing cone in position on the shaft. Slide the shaft into the column and fit 12 steel balls. Smear the balls with grease so that they will remain in position in the column groove then fit the adjustable bearing cone to hold the balls in position.

Assemble the steering nut. Smear the balls with grease then fit them into the groove. Partly screw the shaft into the nut and continue fitting balls until the nut groove is completely full. Screw the nut on to the shaft, fit the remaining balls into the transfer tube and fit the transfer tube on to the nut.

Caution: Do not allow the nut to be screwed to the end of the shaft thread as this will release the steel balls.

Fitting the Column on the Steering Box: Insert shaft into the box and position the column nut so that the transfer tube is on the opposite side to the drop-arm shaft. Set the column in the correct position — tank mounting bracket on 1200 Tractor towards front and throttle lever bracket on other tractors towards drop-arm side — fit the four flange bolts and tighten to 50 lb ft (6·9 kg metres).

Setting the Ball Pegs: Align the steering nut and rocker arm peg locations. Fit one peg with the original thickness of shims and fully tighten the screws. Fit the other peg without shims and tighten the screws until the peg just commences to hold the

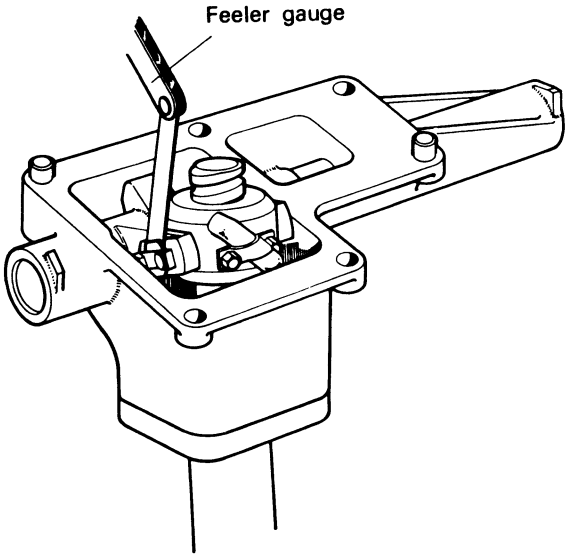

Figure 24. SETTING THE BALL PEGS

nut. Measure the distance between the peg flange and rocker arm face with a feeler gauge. Subtract 0·002 in. (0·05 mm) from the reading obtained and select shims to make up this thickness (Fig. 24).

Example: If feeler gauge reading is 0·018 in. then the thickness of shims required is 0·018 minus 0·002: equals 0·016 in. This will give the required peg setting of 0·001 – 0·003 in. (0·02 – 0·08 mm) pre-load.

Remove the ball peg and fit shims of the required thickness. Fully tighten all screws then check that the nut is in the centre of the fork; if not, transfer shims from one side to the other. When the nut is central, firmly tighten the four screws then lock in position, with the tabwasher or centre punching according to the type being serviced.

Steering Column Bearing Adjustment: Screw the bearing cone down until all play is removed but the bearing is not preloaded, then unscrew the bearing cone $\frac{1}{8}$th. turn to give 0 to 0·003 in (0 to 0·076 mm) end float with the shaft central in tube. Hold the cone bearing in this position with a $1\frac{1}{2}$ in. AF spanner and tighten the locknut to 120 lb ft (16·6 kg metres). A tabwasher is fitted to lock the bearing and nut on early tractors, but on later tractors a special locknut, Part No. 924967, is fitted. This locknut has a recess on one side, *which must be fitted against the bearing cone,* and does not require a tabwasher.

Replace the plastic dirt excluder, fit the shaft key and replace the steering wheel, flat washer and nut. Do not overtighten the wheel nut as this will make subsequent removal difficult. A tightening torque of 20 lb ft (2·76 kg metres) is sufficient.

Replacing the Steering Box: Clean the gearbox cover face and on all tractors except 1200 top up the oil bath so that the oil level is not more than 1 in. (2·5 cm) below the cover face.

On 1200 Tractors the oil bath must be filled after the steering box has been bolted in position.

On 990 and 880 Tractors fit the two outer front flange bolts into the steering box before placing it in position.

Fit a new gasket and tighten the box bolts to 30 lb ft (4·15 kg metres).

Lubricate the cross shaft and column bearings through the grease nipples.

Refitting the Drop Arm: Check that the seals are in position on the shaft then fit the drop arm so that the shaft and arm marks line up as shown in Fig. 15. Replace the retaining bolt and tighten to

1200 – 120 lb ft (16·6 kg metres)

990 and 880 – 30 lb ft (4·15 kg metres)

780 and 770 – 75 lb ft (10·5 kg metres)

Drag Link Length: To obtain full steering lock in each direction and at all track settings the drag link should be set so that the distance between the centre of each ball joint is as follows:

1200 – 54 in. (137·16 cm). Tractors 700001 to 703529

1200 – $52\frac{1}{2}$ in. (133·35 cm). Tractor 703530 onward

990, 880 } $46\frac{9}{16}$ in. (118·27 cm)

780, 770 } $44\frac{7}{16}$ in. (112·87 cm).

POWER-ASSISTED STEERING

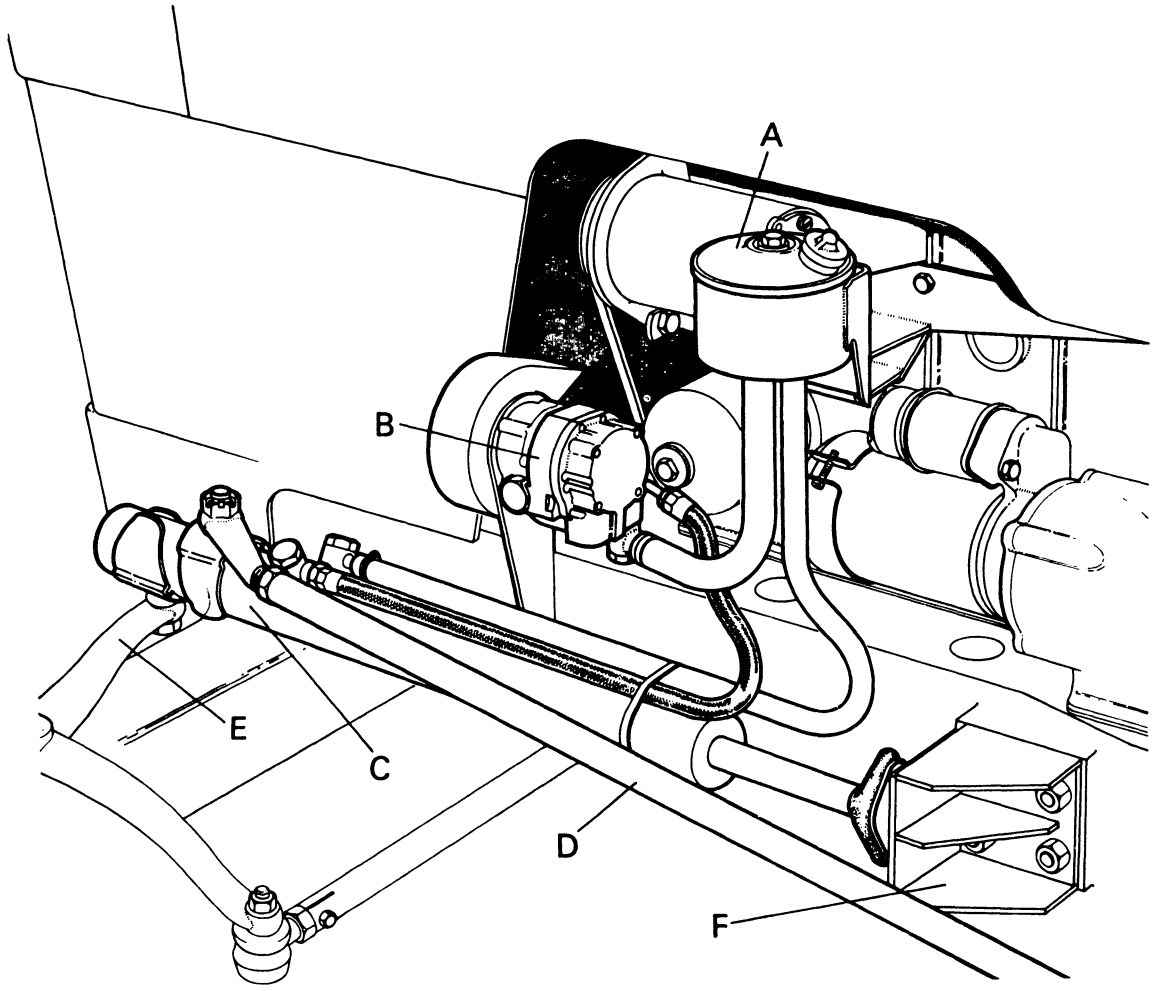

Figure 25. UNITS OF POWER-ASSISTED STEERING

A. Reservoir
B. Pump
C. Hydraulic ram
D. Drag link
E. Steering arm
F. Anchor bracket

Operation

The Hydrosteer power-assisted steering system consists of an oil reservoir, engine-driven pump and hydraulic ram. The steering column and box are the same as used on the manual steering system, but the drag link is connected to the manual ball pin on the hydraulic ram instead of being attached directly to the left-hand steering lever.

When the steering wheel is turned the ram remains stationary initially and the manual ball pin moves the spool in the valve housing. This directs the pump output to the appropriate side of the piston, causing a rapid build-up of pressure until it is sufficient to provide the assistance required to turn the wheels. The flow of oil and resulting movement of the ram is maintained within the limits of the wheel travel so long as the steering wheel is turned enough to keep the spool displaced from its central position.

When the steering wheel remains stationary the spring on the valve spool holds the spool in the central position. Oil then flows past the spool lands and returns to the reservoir. Since only a small amount of back pressure then exists in the system the pump delivers oil at low pressure to both sides of the piston and a balanced condition exists.

In the event of the front wheels being subjected to a shock load, such as is encountered when travelling over rough ground, the steering wheel and, therefore, the valve spool remain stationary, but the ram and, therefore, the spool housing, is displaced.

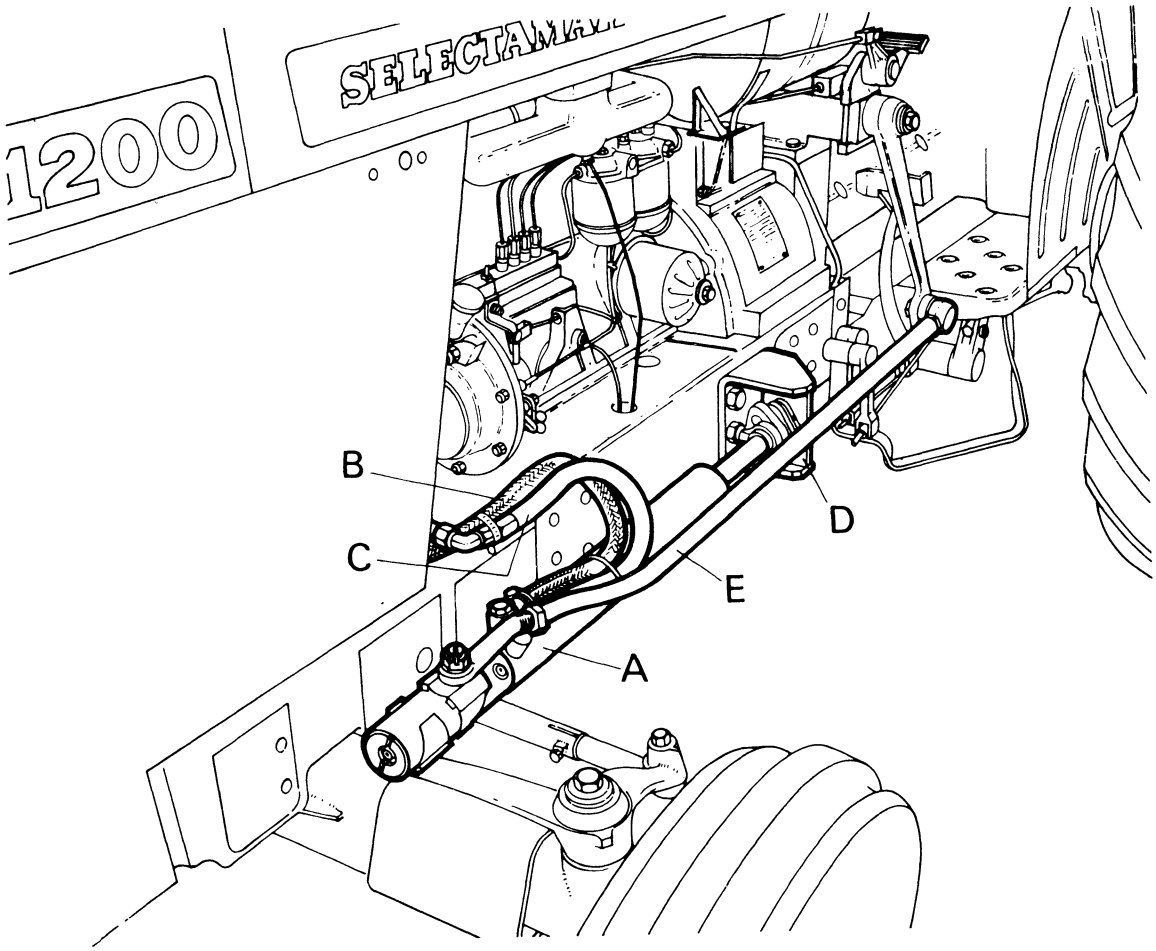

Figure 26. POWER-ASSISTED STEERING ON 1200 TRACTORS

A. Hydraulic ram B. Pressure pipe C. Return pipe D. Anchor bracket E. Drag link

This directs the oil to the appropriate side of the piston, so that steering movement is damped and the front wheels are automatically returned to their original position.

If, for any reason, the pump fails to deliver oil pressure the tractor may be steered manually. If this occurs, movement of the valve spool will not result in any power assistance, but when the drag link has moved the manual ball pin to the end of its travel further movement of the steering wheel will move the ram manually. Oil will then pass from one side of the piston to the other through the spring-loaded relief valve in the spool valve housing. Under this condition the ram offers very little resistance to movement and the steering effort required is not appreciably increased over that required for the manual system.

Maintenance and Service

The pump and ram components operate with very small clearances and it is therefore essential that great care is taken to ensure that no dirt or foreign matter enters the system.

When filling, or topping up the oil reservoir, always clean the cover before removing the filler cap and ensure that all containers, funnels, etc., are clean.

The oils recommended for use in power-assisted steering are:

Amoco	American Industrial Oil 15
BP	Energol HL65
Castrol	Hyspin AW32 (formerly Hyspin 70)
Esso	Esso Automatic Transmission Fluid
Mobil	Mobilfluid 200
Shell	Tellus 27

In areas where none of the above brands is available grade SAE10 oil should be used. Vegetable oils, such as brake and shock absorber fluid, *must not be used.* The oil reservoir contains a filter element, which can be lifted out after removing the cover, and this should be renewed annually. Do not attempt to clean an element and do not judge the condition of an element by its appearance: oil flows from inside to outside and therefore filtered particles will be retained on the inside of the element.

When carrying out the weekly tractor maintenance the following points should receive attention:

1. Lubricate the two steering ball pins and the ram anchorage. Two grease nipples are provided on the ram and one on the anchor ball housing.

2. Check the level of the oil in the reservoir: top up to the 'F' mark on the dipstick, with a recommended grade of oil, if required.

3. Examine the hoses and connections for any signs of oil leakage and check the ram anchor bracket bolts for tightness.

4. On 770, 780 and 880 Tractors, examine the drive belt: check that it is in good condition and has $\frac{3}{4}$ in. (20 mm) free play. Belt tension may be adjusted by releasing the bolts attaching the pump mounting bracket to the main frame and moving the bracket up, or down, in the slotted mounting holes until the correct amount of free play is obtained.

Fault Finding

If incorrect operation is experienced check the following, so that the fault can be located as quickly as possible.

1. Loss of Power Assistance: Loss of power assistance may be due to the following:

(*a*) Low oil level. Refill and bleed system then examine for oil leaks.

(*b*) Failure of pump drive: Examine.

(*c*) Incorrect drag link setting: See Page 19.

(*d*) Worn pump due to entry of dust into system: Check pump pressure. See 2a this page.

(*e*) Worn ram cylinder due to entry of dust into system: Strip and examine.

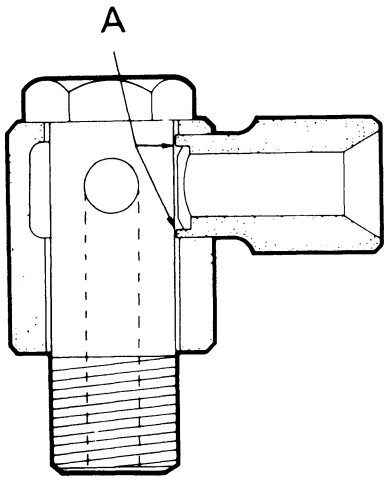

Figure 27. RAM CYLINDER BANJO

Threaded sleeve must not protrude as shown. Clearance at 'A' must be sufficient to allow full flow of oil.

(*f*) Faulty banjo connection on ram inlet: If inlet pipe protrudes too far through banjo the oil flow will be restricted (Fig. 27).

2. Heavy Steering: Heavy steering should not be confused with binding. Heavy steering is experienced over the full range of front wheel travel but binding is normally experienced over only a portion of the travel. If heavy steering occurs check the following:

(*a*) Pump output pressure: To check the pump output pressure connect a pressure gauge into the pressure side of the system. The easiest way of doing this is to drill through a spare banjo bolt (915586) and then weld a suitable connector on the head. Remove the banjo bolt from the *ram inlet* and replace this with the special bolt. Connect the pressure gauge, top up the reservoir and on tractors with a belt-driven pump check that the belt has sufficient tension. Start the engine and run at idling speed, operate the steering from lock-to-lock several times to expel air from the system, then turn the steering wheel into full lock. Check that the drag link is moving the manual ball pin then hold the steering wheel in full lock and note the gauge reading. If the correct pressure is shown on the gauge (see Page 41) the pump is satisfactory. *Caution:* Only hold the steering wheel in full lock long enough to obtain an accurate gauge reading. Prolonged operation of the pump at maximum pressure will overheat the oil and may cause damage. If the correct maximum pressure is not reached at idling speed gradually increase the engine speed. A gradual increase in pump pressure with engine speed indicates

1. Flow control valve stuck open.
2. Worn pump.
3. Internal leakage in ram.

To check if there is any internal leakage in the ram, disconnect the ram inlet pipe and connect the pressure gauge to the pipe union, so that there is no feed into the ram. *Run the engine at idling speed only* and note the gauge reading. If there is a large increase in pressure, this indicates that internal leakage is taking place in the ram.

(*b*) If the pump pressure is satisfactory and there is no tightness in the steering joints, king-pins, etc., dismantle the ram cylinder (see Page 26) and inspect the valve spool. Deep scoring or scratches will allow internal leakage. If the valve assembly is in good condition the trouble may be due to leakage past the piston, and the inner tube and piston should be examined.

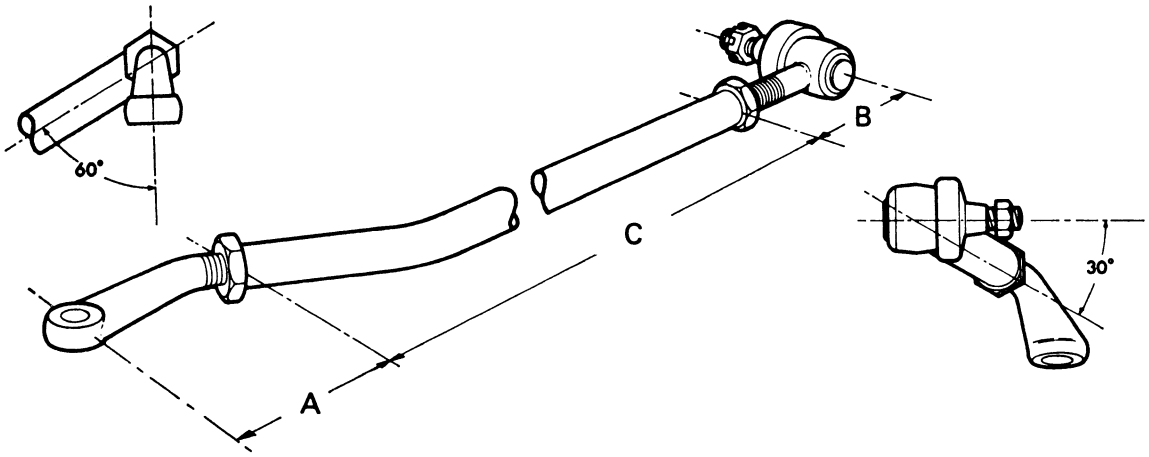

Figure 28. DRAG LINK DIMENSIONS — 1200

A. 4 in. (101·6 mm)
B. $2\frac{3}{8}$ in. (60·3 mm)
C. $45\frac{1}{4}$ in. (115 mm) — Tractor 700001 to 703529
C. $43\frac{3}{4}$ in. (111 mm) — Tractor 703530 onward

3. Binding: If binding occurs when the steering wheel is turned, check the following:

(*a*) Movement of the ball pin: The operating sleeve may be binding in the locating sleeve, probably due to inadequate lubrication. These parts should be removed and freed or, if necessary, renewed.

(*b*) Control valve spool: The spool should be free in the valve housing and, if binding, inspect for damage. Renew the spool and housing if necessary.

4. Noisy Operation:

(*a*) Reservoir oil level: Check the oil level and top up to the correct level with a recommended grade of oil. If the oil level is low the pump is probably drawing air into the system. *Caution:* Do not run the tractor engine if the oil level in the reservoir is below the low mark. The pump is lubricated by the hydraulic oil and running the pump with insufficient oil may cause serious pump damage.

(*b*) Pump drive: On 880, 780 and 770 Tractors check the drive belt tension. If the belt is run tight, pump noise may result, and if slack the belt may slip and squeal.

5. Steering Chatter: If the steering box and joints are in good condition, check the piston rod anchorage. The ball may have excessive clearance in its housing (which can be reduced by removing shims) or be loose on the piston rod. Also check the ram anchor bracket bolts: these may be loose permitting the bracket to move on the tractor frame.

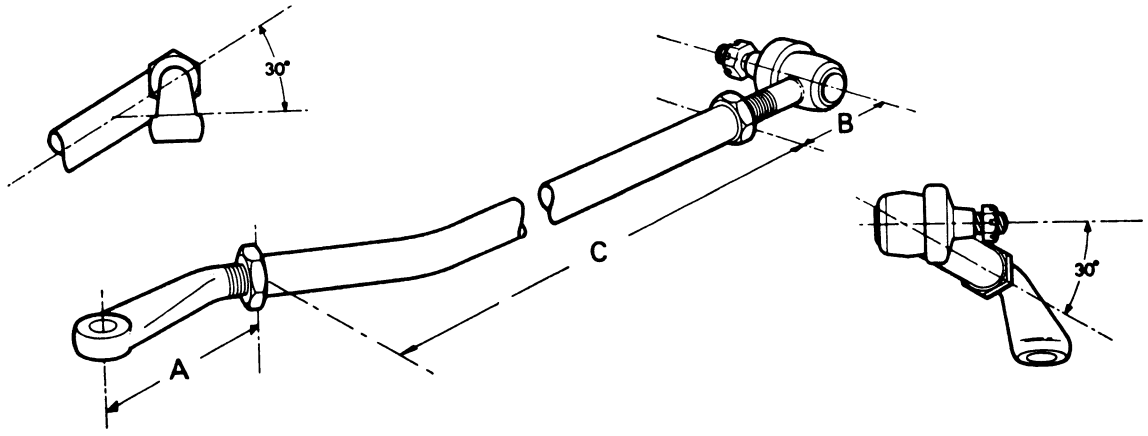

Figure 29. DRAG LINK DIMENSIONS — 990

Standard Axle

A. 4 in. (101·6 mm)
B. $2\frac{3}{8}$ in. (60·3 mm)
C. 39 in. (990 mm)

Heavy Duty Axle

A. $3\frac{5}{8}$ in. (92·1 mm)
B. $1\frac{3}{4}$ in. (44·4 mm)
C. $38\frac{7}{8}$ in. (987 mm)

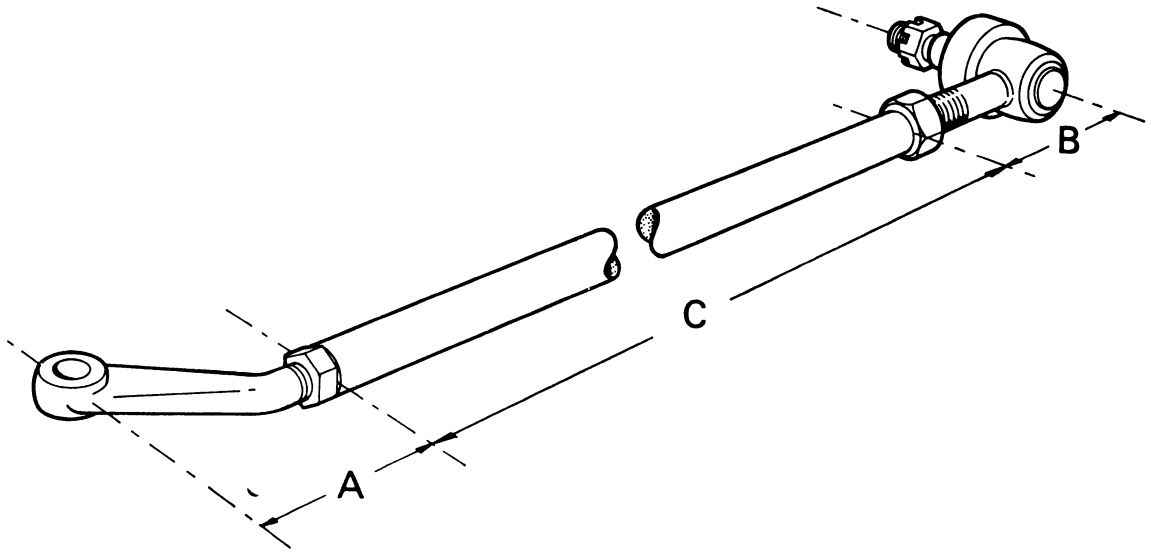

Figure 30. DRAG LINK DIMENSIONS — 880–780–770

880

A. $4\frac{1}{8}$ in. (104·8 mm) B. $2\frac{1}{2}$ in. (63·5 mm) C. $37\frac{3}{8}$ in. (949 mm)

780/770

A. $4\frac{1}{8}$ in. (104·8 mm) B. $2\frac{1}{8}$ in. (54 mm) C. $35\frac{3}{4}$ in. (908 mm)

Repair Operations

Drag Link Setting: For correct operation of the steering it is essential that the drag link is set to the correct length and the eye-end and ball joint are in their correct angular positions.

If the drag link has been disturbed, or if faulty operation is experienced, set the link to the dimension shown in Figs. 28, 29 and 30.

Pump Removal and Replacement: On 1200 Tractors, and 990 Tractors from No. 800,001, the Plessey balanced rotor pump is mounted on the right-hand side of the timing-gear carrier plate and driven by the camshaft gear. To remove the pump it is only necessary to drain the reservoir, disconnect the three pump pipes and remove the two setscrews attaching the pump body to the engine carrier-plate. The pump assembly can then be drawn rearwards from the carrier-plate (Fig. 31).

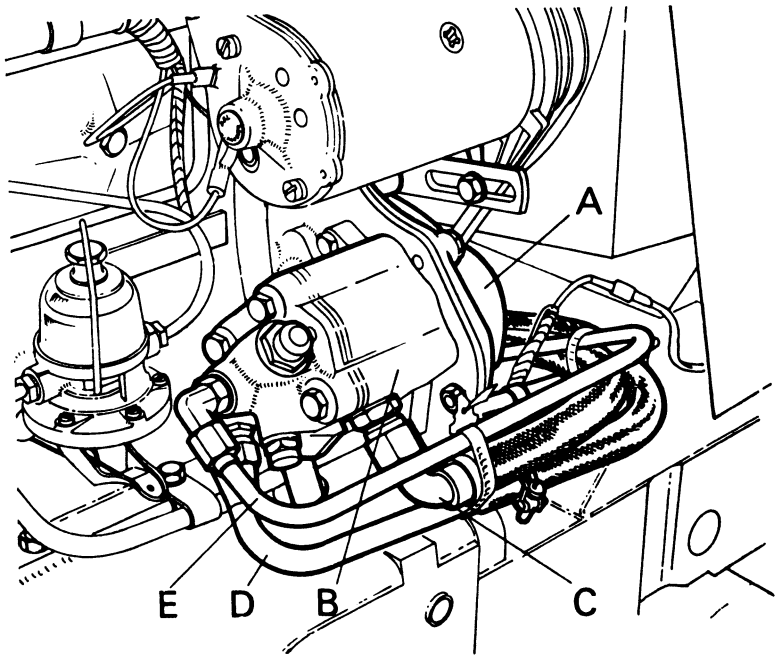

Figure 31.

POWER-ASSISTED STEERING PUMP

1200

A. Engine timing case
B. Pump
C. Pump inlet pipe
D. Pressure feed pipe
E. Return pipe to reservoir

On 990 Tractors before No. 800,000 the Hobourn Eaton roller pump is mounted on the left-hand side of the engine carrier-plate and driven by the injection pump drive gear. Disconnect the pipes from the pump and reservoir, using a suitable container to catch the oil which will be released, and remove the three bolts from the pump flange. Withdraw the pump, complete with reservoir, carefully rearwards until the drive gear is clear of the back-plate.

On 880, 780 and 770 Tractors the Hobourn Eaton roller pump is mounted on the left-hand side of the main frame and belt driven from the crankshaft. Disconnect the pipes from the pump, using a suitable container to catch the oil, and release the two bolts attaching the bracket to the tractor frame. Slide the pump downwards to slacken the drive belt: lift the belt off the pump pulley and remove the bracket and pump from the main frame.

Refit the pumps in reverse order of removal. On 1200 and 990 Tractors fit a new gasket on the pump mounting flange and take care to avoid damaging the drive gear or allowing any dirt to enter the timing-case.

If the pump has been stripped, or a replacement pump fitted, clean out the reservoir, flush the pipes with clean oil and fit a new filter element before refilling with oil.

After refitting the pump and filling with oil, start the engine. Raise the front wheels clear of the ground and operate the steering from lock-to-lock several times to remove air from the system, then stop engine and top up the reservoir.

Plessey Balanced Rotor Pump: First thoroughly clean the outside of the pump and prepare a clean work-bench. Scribe marks on the pump body, mounting flange, sandwich plate and end cover, to aid correct positioning during assembly.

Flow Control Valve: If a sticking flow control valve is suspected, remove the cap and plug from the cover and push the flow control valve out of its bore. Place the pump, gear downwards, on the bench and remove the four body bolts. Lift off the cover and carefully lap the valve in with metal polish until it is quite free. Remove the pressure relief valve, taking care of the shims under the spring, so that the cover can be washed and all traces of polish removed. Smear the valves with clean oil and re-assemble the cover, replacing the shims fitted under the relief valve spring (Fig. 32).

Dismantling: Release the tabwasher and remove the shaft nut. Remove the drive gear from the shaft taper with a suitable extractor. *Do not attempt to remove the gear by hammering the shaft end* as this may cause the rotor teeth to damage the faces of the soft alloy bearings (Fig. 33).

Remove the key from the driveshaft and remove the four body bolts. Carefully separate the mounting flange, sandwich plate and cover from the pump body. If the body dowels are tight, lightly tap the cover with a hammer shaft.

Withdraw the rotors and bearings from pump body. Carefully note the position of each bearing and lightly mark the top of each bearing to enable them to be re-assembled in their original positions. Remove circlip from the mounting flange. Place the flange downwards on suitable supports and tap the seal out with a hammer and drift.

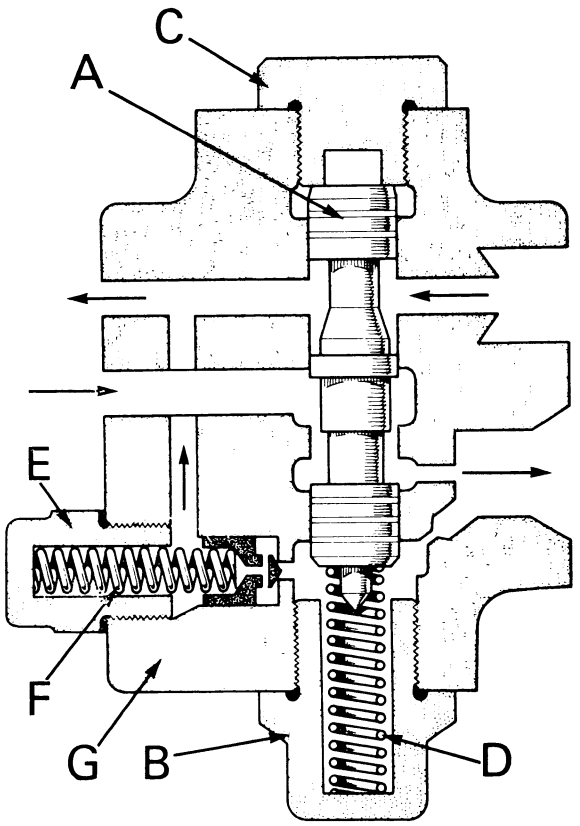

Figure 32. FLOW CONTROL VALVE

A. Valve spool
B. Cap (flow control valve)
C. Valve plug
D. Spring (flow control valve)
E. Cap (pressure release valve)
F. Spring (pressure relief valve)
G. Plunger (pressure relief valve)

Remove the flow control valve cap and plug from the cover. Gently push out the valve spool and spring, taking care to keep the spool central in its bore, to prevent it from jamming. Remove the relief valve plug and spring, carefully noting the number of shims fitted under the spring. Invert the cover and tap it gently on a piece of wood to extract the relief valve plunger.

Inspection: Having thoroughly cleaned all parts and placed them on a clean bench, first examine the pump body. Inspect the body for external damage or cracks and the rotor bores for wear. It is normal for the rotors to cut a light track on the inlet side of the body and if the track is not excessively scored, or does not exceed 0·004 in (0·10 mm) at its deepest point, the body is serviceable and only requires any burrs on the edge of the gear track removing with very fine abrasive cloth lubricated with kerosene. The body must then be thoroughly flushed clean.

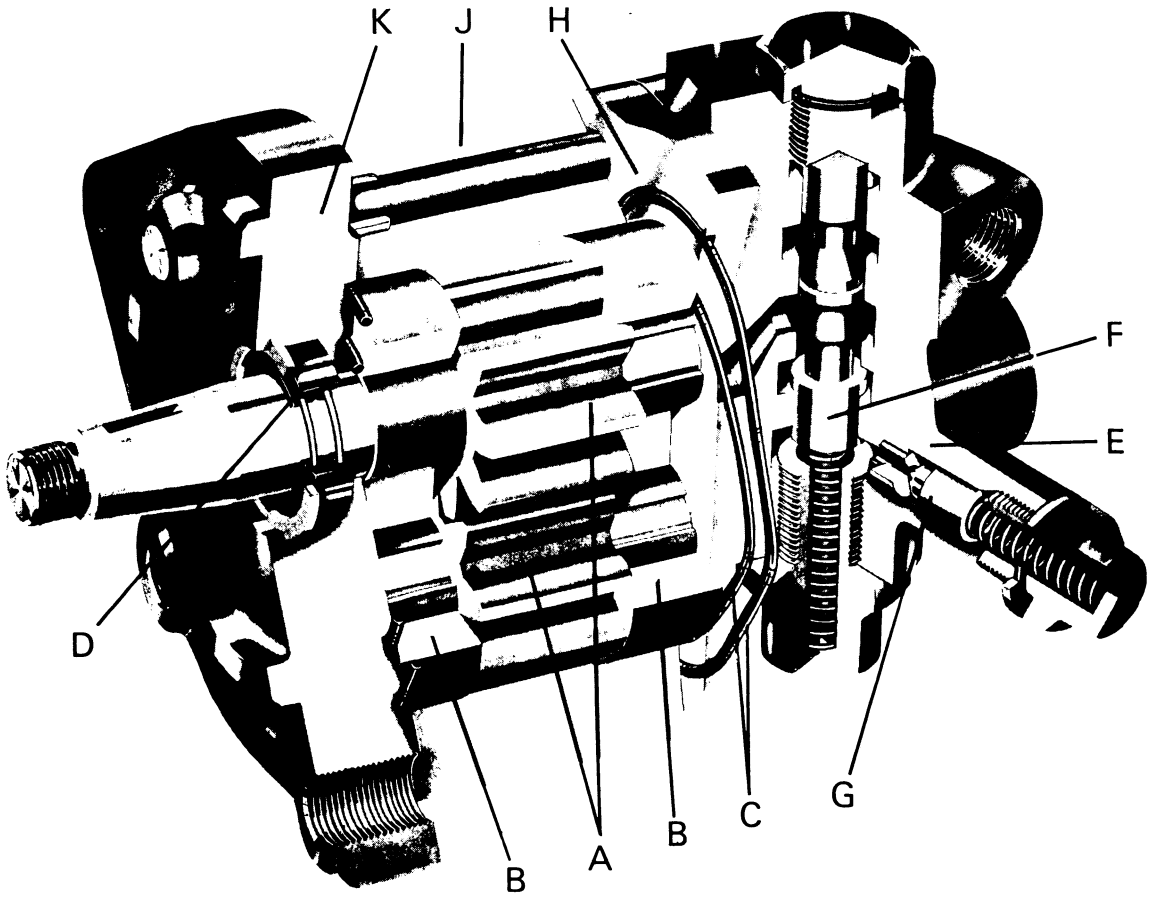

Figure 33. PLESSEY BALANCED ROTOR PUMP

A. Rotors B. Bearings C. Sealing rings D. Oil seal
E. Cover F. Flow control valve spool G. Pressure relief valve plunger
H. Sandwich plate J. Body K. Mounting flange

If the maximum depth of the track is greater than 0·004 in. (0·10 mm) the pump should be scrapped as a new body, rotors and bearings are required.

Examine each bearing for wear in the bores and on the face. Pay particular attention to the condition of the lubricating scrolls and the portion of the bearing face between the bearing bores. This portion is known as the seal bridge and any score marks or damage across this bridge can cause high leakage losses (Fig. 34). If the bearings are worn or scored on the face they may be renewed, but new bearings must not be fitted if the body is worn, as this would lift the rotors away from the inlet side of the pump body allowing excessive oil leakage between the tips of the rotor teeth and the body.

Inspect the rotors for scored or worn side faces and journals, and for damage or surface cracks on the teeth. Check also that the thread is not damaged or the keyway worn. Slight wear or scoring on the journals can be erased by polishing between lathe centres using 'O' grade emery paper lubricated with paraffin (kerosene). If the bearings are being renewed because the side faces are scored, the side faces of the rotors can be polished by sandwiching a piece of grade 'O' emery paper between the rotor face and the unworn side of the discarded bearing.

As the rotors must be selected so that the teeth widths are equal within 0·0002 in. (0·005 mm) and the journal diameters are equal within 0·0005 in. (0·013 mm) rotors must not be renewed singly but always replaced by a matched pair (Fig. 35).

Measure the overall length of the rotor and bearing assembly and compare this with the length of the pump body. If the rotor and bearings are more than 0·004 – 0·008 in. (0·10 – 0·20 mm) less than the length of the body, the bearing 'O' rings will be unable to maintain the pump balancing pressure and the pump may not, therefore, be able to reach the full output pressure (Fig. 36).

Re-assembly: Carry out all operations on a clean workbench and ensure that all components are clean and dry. Handle the components with care as any burrs or bruise marks on the machined surfaces will render them unserviceable.

Place the cover flat on the bench and position it so that the relief valve port is facing away from you.

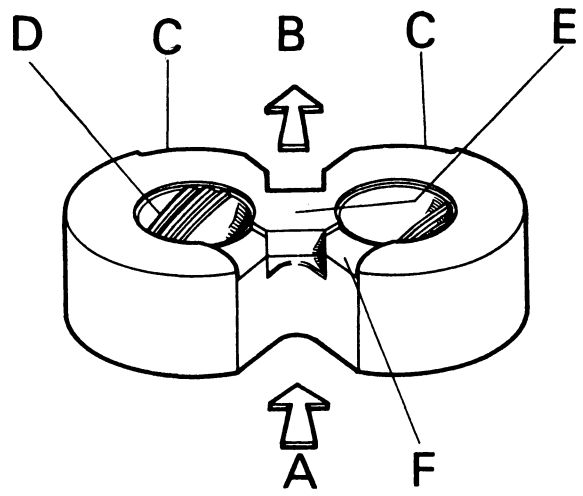

Figure 34. PUMP BEARING

A. Inlet side B. Outlet side C. Relieved radius
D. Lubricating scrolls E. Seal bridge
F. Recess on gear face

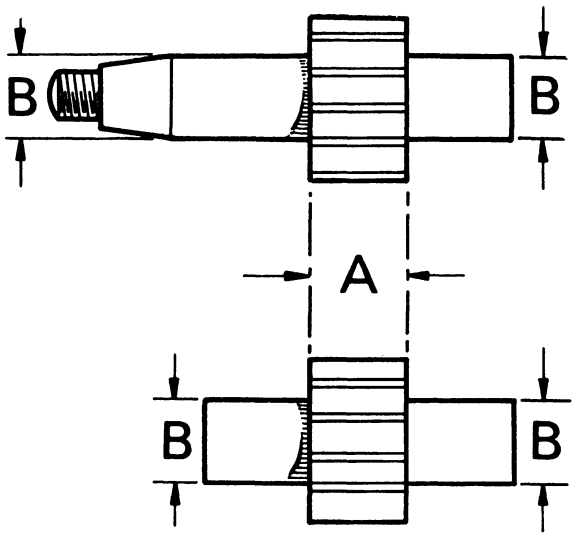

Figure 35. PUMP ROTORS

A. Rotor width B. Journal diameter

Insert the spigoted end of the flow control valve spool into the right-hand side of the cover then fit the spring into the left-hand side. Ensure that the spring is located on the valve spigot before replacing the cap and plug; fit new 'O' rings on each before screwing into position. Replace the relief valve plunger together with its shims, spring, bonded seal and cap.

Place the pump flange, machined face downwards, on a clean, flat surface, apply a little grease to the oil seal then press the seal into position. Do not drive the seal into position with a hammer and punch but use a $1\frac{3}{32}$ in. (25 mm) diameter tool to press the seal into position, then fit the circlip.

Fit new sealing rings into the recesses in the flange and sandwich plate. Place the sandwich plate over the dowels on the pump body, noting that the point of the sealing ring is towards the inlet port of the body.

Place the pump body on the bench, sandwich plate downwards and the inlet port towards you. Lightly lubricate the bores and bearing faces then fit the cover-end bearing into the body: ensure that the recessed face is uppermost and the relieved radii on the outside diameters is towards the outlet side of the pump body. If the original bearings are being refitted check that these are refitted in their original positions.

Fit the rotors in position, driving rotor on the right; replace the top bearing, recessed face towards the rotors and the outer relieved radii towards the outlet side of the body.

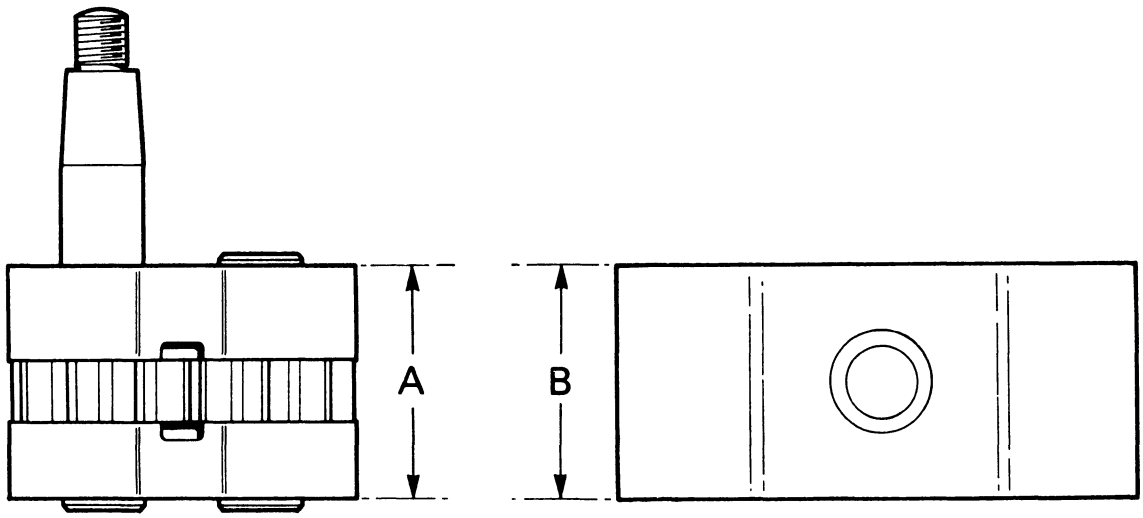

Figure 36. BEARING AND BODY DIMENSIONS

Dimension 'A' must not be less than Dimension 'B' — 0·008 in. (0·20 mm)

Smear the inside of the oil seal with grease then fit the flange in position. Take special care to avoid the shaft keyway cutting the seal edge by holding the seal away from the keyway side of the shaft until the flange reaches the dowels.

Turn the assembly over and place on two wooden blocks so that the driveshaft is clear of the bench. Fit cover on to sandwich plate, positioned so that the relief valve cap is towards the inlet port side of pump, then fit the four securing bolts. Tighten the bolts progressively and by diagonal selection to 30 lb ft (4 kg metres).

Fit drive key into shaft keyway, replace the gear, tabwasher and nut. Do not hammer the gear on to the shaft as this may cause the rotor teeth to damage the face of the softer bearings, but hold the gear stationary and tighten the nut to 45 lb ft (16·25 kg metres) before locking with the tabwasher.

If the pump is not to be used immediately, seal the ports with adhesive tape to prevent ingress of foreign matter during storage.

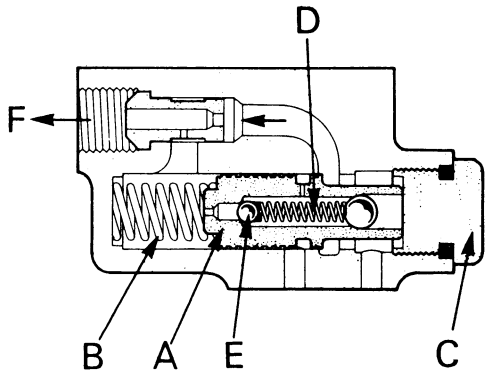

Figure 37. FLOW CONTROL VALVE

A. Valve spool B. Spring (flow control) C. Cap
D. Spring (pressure relief) E. Ball (relief valve)
F. Outlet connection

Hobourn Eaton Roller Pump: First thoroughly clean the outside of the pump and prepare a clean work-bench. Scribe marks on the

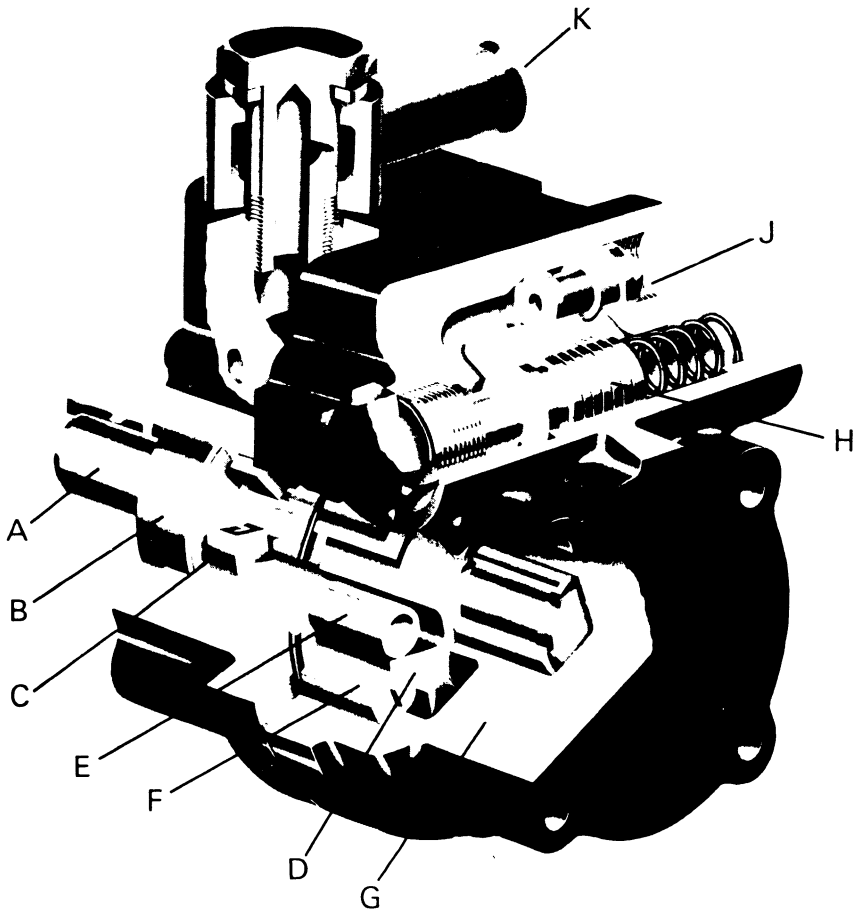

Figure 38 HOBOURN EATON ROLLER PUMP

A. Driveshaft B Bearing C. Oil seal D. Carrier
E. Roller F Cam G. Body H. Control valve spool
J. Outlet connection K Inlet connection

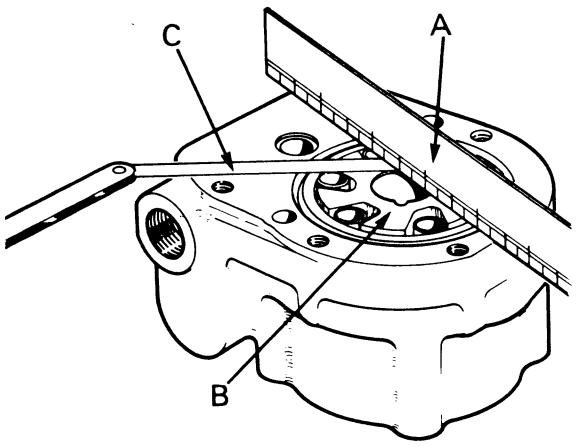

Figure 39. CHECKING THE CARRIER AND ROLLERS
A. Straight edge B Carrier C. Feeler gauge

pump cover, body and flange, or mounting bracket, to assist re-assembling in their correct positions.

Flow Control Valve: Unscrew the valve cap, withdraw the valve and spring from the body. Do not attempt to strip the valve assembly: the pressure relief valve inside the valve spool is non-adjustable and should not be disturbed (Fig. 37). If faulty relief valve operation is suspected fit a new spool assembly, ensuring that the valve in the new spool is set to the correct pressure (see Page 41). If the spool is not quite free in the cover bore carefully lap it in with metal polish then thoroughly clean the cover and valve to remove all traces of polish.

Dismantling the Pump: On 990 Tractors the reservoir is attached to the top of the pump and this can be removed by first taking off the reservoir cover, lifting out the filter element and unscrewing the hexagonal mounting stud in the base of the reservoir. After removing the reservoir, lift the gasket and gasket retainer from the pump.

Clamp the pump body in a vice and withdraw the drive gear, or pulley: this is on a parallel shaft and should not be very tight. Remove the four socket screws attaching the support plate, or bracket, to the pump.

Lay the pump, drive end upwards, on the bench and remove the six cover screws. Withdraw the cover vertically, so that the rollers will not fall out. The carrier is not tight on the shaft and should remain in the body but if it is withdrawn with the cover, remove it from the shaft and extract the key. Turn the body over and allow the carrier and rollers to fall out, then remove the cam ring and locking peg. Remove the shaft by gently tapping it forwards out of the cover with a hammer shaft.

Inspection: Wash all parts in paraffin and place in a clean container. Components should be handled very carefully and great care taken to ensure that no foreign matter enters the pump during assembly.

Examine the pump body and cover for any signs of wear. Renew either part if the faces or

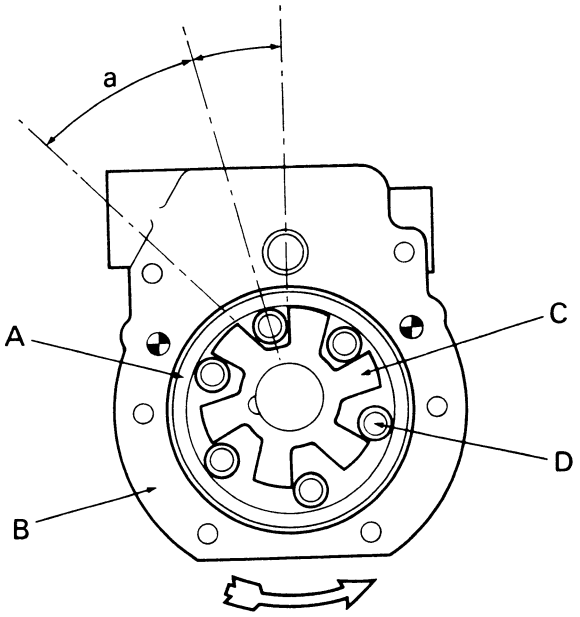

Figure 40. FITTING CARRIER
A. Cam B. Body C. Carrier D. Roller
Carrier must be fitted so that larger angle 'a' is towards direction of rotation

bushes are worn. Inspect cam, carrier and rollers for wear or scoring, paying particular attention to roller ends. As these components cannot be replaced individually, a new assembly must be fitted if the cam, carrier or any of the rollers are worn.

Fit cam locking peg in its hole in the body pocket and fit the cam. Ensure that the cam seats on the pocket face and the slot in the cam locates on locking peg. Fit the carrier in cam ring, in the direction shown in Fig. 40; and replace the rollers. Place a straight-edge across the body face and check the end clearance of carrier and rollers (Fig. 39). If the end clearance exceeds 0·002 in. (0·05 mm) a new cam, carrier and roller assembly is required.

Examine shaft and bearing. If bearing shows any signs of roughness, or if excessive grease has seeped out of the bearing, it should be renewed.

Check flow control valve spring: this should have a tension of 8 to 9 lb (3·5 to 4·0 kg) when compressed to a length of 0·82 in. (20·8 mm) and should be renewed if outside this limit.

Re-assembly: Press a new oil seal into the pump cover, ensuring that the seal lip is not damaged and is facing towards the inside of cover. Smear inside of the seal with grease then insert shaft and bearing through the front cover, ensuring that there are no sharp edges on the shaft which may cut the seal lip.

Place cam locking peg in hole in body pocket and replace the cam, locating the cam slot on the locking peg. Fit carrier in the cam ring, angled faces, towards direction of rotation as shown in Fig. 40, then replace the rollers.

Fit carrier key into shaft keyway and new 'O' rings in the body face. Smear shaft with clean oil before inserting it through the carrier, ensuring that the key does not fall out of the shaft and displace the 'O' rings. Fit the six socket screws and tighten by diagonal selection to 18 lb ft (2·5 kg metres). When the screws are fully tightened check that the shaft can be turned without binding.

Refit the mounting plate, or support bracket, and replace the drive key in the shaft keyway. Refit the gear, or pulley, replace the retaining bolt and tighten to 20 lb ft (2·7 kg metres).

On 990 pump replace the gasket retainer and fit two new 'O' rings. Replace the reservoir, reinforcement plate and filter support. Fit the hexagonal stud and tighten to 30 lb ft (4·0 kg metres). Fit a new filter element, replace the filter cap, spring and cover. Replace the reservoir cover and tighten the retaining bolt to 5 lb ft (0·7 kg metres).

If the pump is not to be fitted to a tractor immediately, seal the ports with adhesive tape to prevent the ingress of foreign matter during storage.

Ram Cylinder: The ram cylinder is attached to the left-hand side of the tractor main frame and the left-hand steering lever. To remove the ram from tractor, first disconnect the two oil pipes, using a container to catch the oil, then release the two ball pins and remove the two bolts attaching the anchor ball housing to the bracket on main frame. The ball housing is in two halves and shims fitted between them should be retained for use when refitting the ram.

Ram Seals: If the ram has been removed because of oil leakage examine the ram before stripping, so that the faulty seal can be located and unnecessary dismantling avoided (Fig. 41).

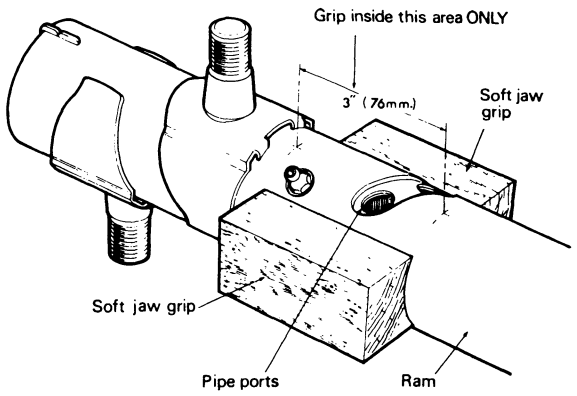

Figure 42. GRIPPING THE RAM IN A VICE

Dismantling Ram Cylinder: Before commencing to dismantle the cylinder, first drain the oil by moving piston rod in and out several times from one extreme end of its travel to the other.

Caution: No attempt should be made to strip a ram cylinder unless the correct tools are available. The tools required are shown in Fig. 43 and if these are not used serious damage will occur to the ram components.

Remove the anchor ball: this is locked in position with a pin and may be unscrewed by holding the ball in a vice and turning the rod with a spanner on the two flats.

Remove the inner half of the anchor ball housing and the rubber dirt excluder from the ram rod. Remove the split pin retaining the locking ring at each end of the outer tube.

Using two soft jaw grips, positioned as shown in Fig. 42, grip the ram in a vice and unscrew the anchor end locking ring, using Service Tool HY11A.

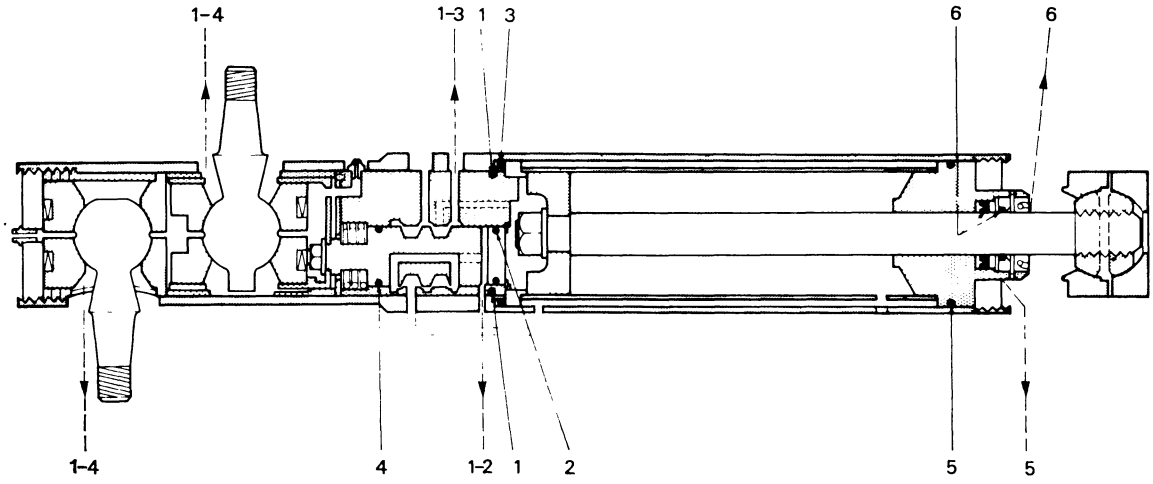

Figure 41. RAM SEALS

1. Valve body 'O' ring
2. End cover 'O' ring
3. Outer tube 'O' ring — 1200 only
4. Valve spool 'O' ring
5 Seal housing 'O' ring
6. Ram rod seal

Oil leaking past the seals will appear at the points shown by the dotted line bearing the same reference number as the seal.

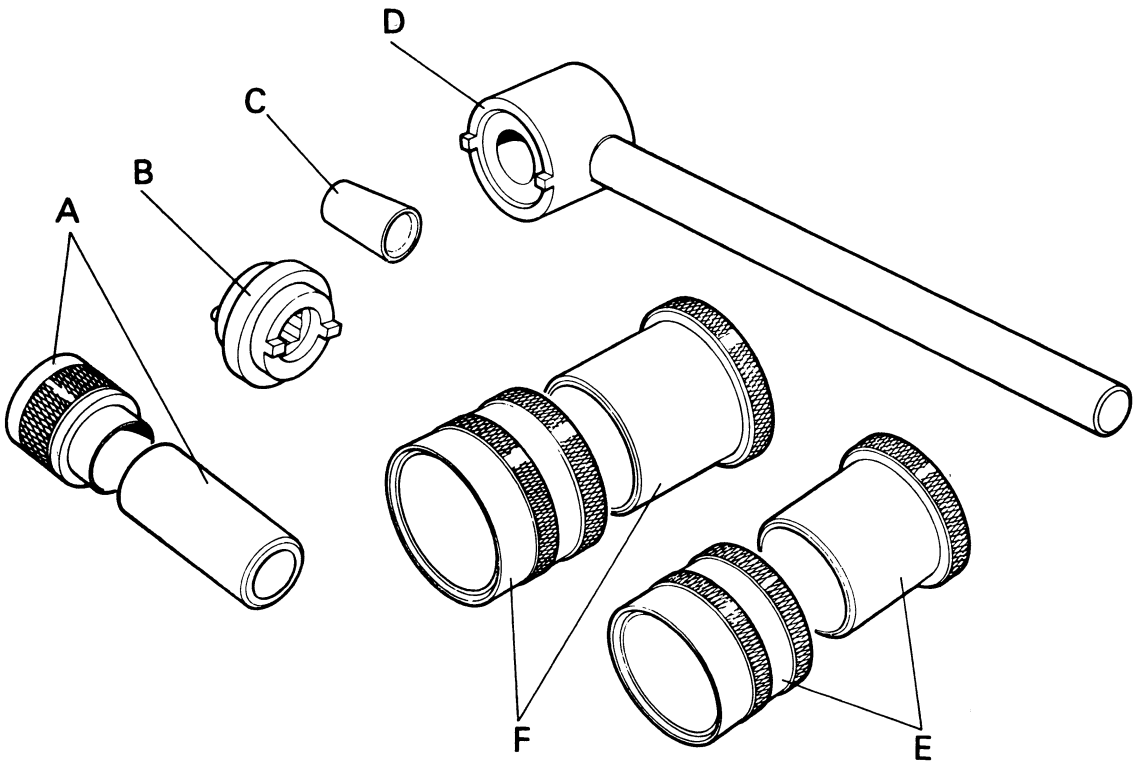

Figure 43. RAM CYLINDER SERVICE TOOLS

A. Gland seal replacer HY9
B. Ball cup spanner HY10
C. Oil seal protector HY13
D. Lock ring spanner HY11
E. Bearing 'O' ring protector ($1\frac{3}{4}$ in. rams) HY12
F. Bearing 'O' ring protector (2 in. rams) HY14

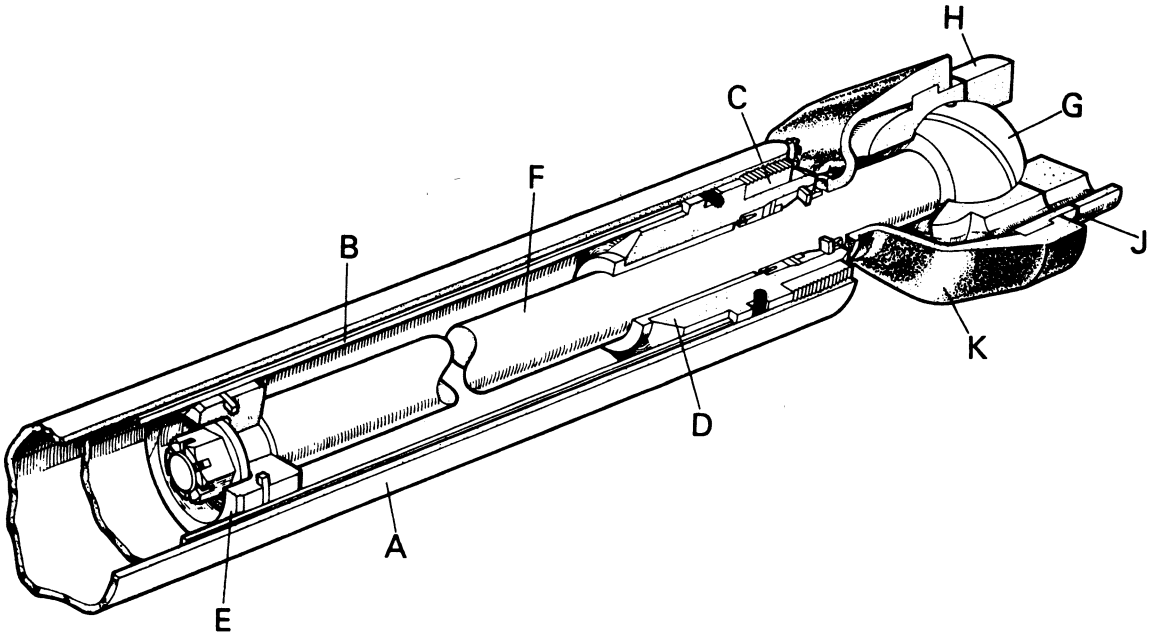

Figure 44. RAM CYLINDER — ANCHORAGE END

A. Outer tube
B. Inner tube
C. Lock ring
D. Seal housing
E. Piston
F. Piston rod
G. Anchor ball
H. Ball housing
J. Shims
K. Dirt excluder

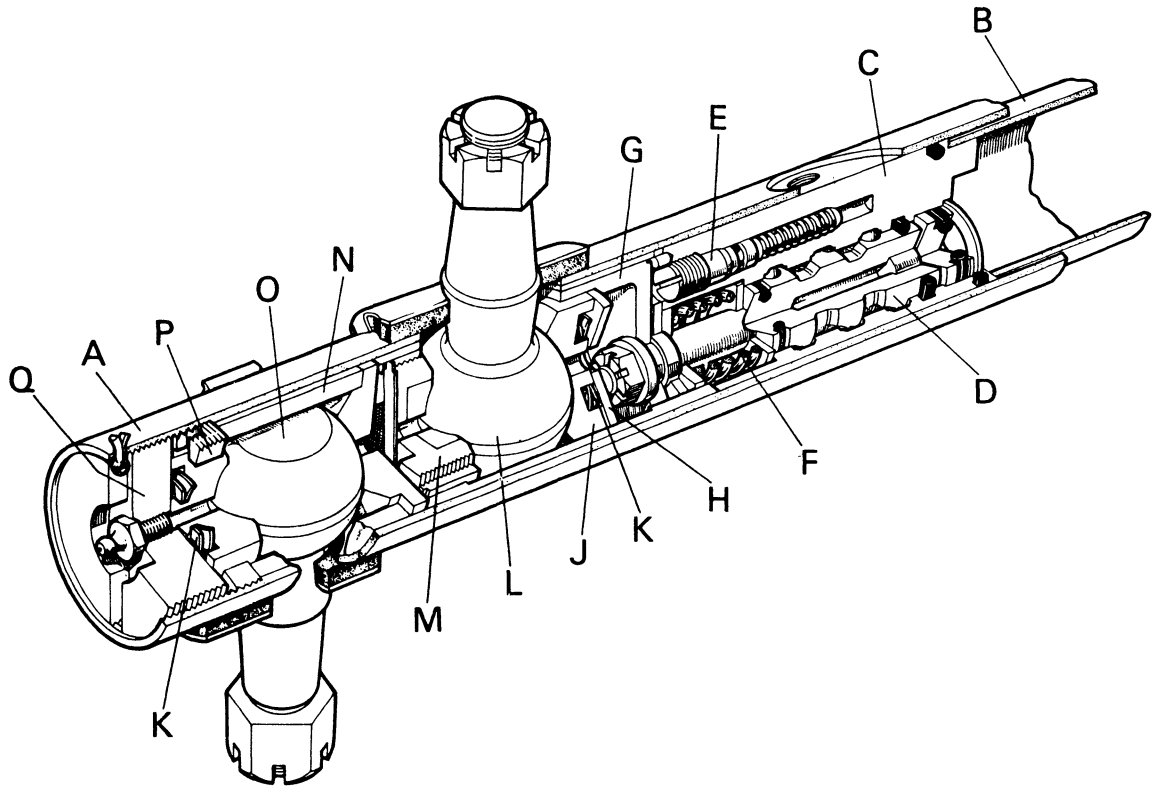

Figure 45. RAM CYLINDER — BALL-PIN END

A. Outer tube	B. Inner tube	C. Valve housing	D. Valve spool
E. Plug — relief valve	F. Reaction spring	G. Operating sleeve	H. Backing washer
J. Ball cup	K. Belleville washers	L. Ball pin — manual	M. Holder — ball cup
N. Spacer	O. Ball pin — power	P. Locking ring	Q. End cover

Caution: The ram should only be clamped in a vice if soft jaw grips, shaped to the ram tube, and positioned as shown, are used. *Gripping the ram in any other way, or position, will damage the ram beyond repair.* Except when actually removing or replacing the valve spool housing, a banjo adaptor and bolt should be fitted in one of the ports, to locate the valve housing in the outer tube.

Unscrew the end cover from the power ball-pin end of the ram, using the same tool (HY11A) as for the other locking ring. Remove the Belleville washers and ball-cup, noting that this cup is the longest of two similar cups fitted in the ram.

Using the same tool (HY11A), tighten the inner lock ring one eighth-of-a-turn to free the threads then screw the lock ring out of the tube. If the ring is excessively tight in the threads do not continue turning the ring as this will damage the threads and render the tube useless, but carefully drill and split the ring at opposite points, so that it can be removed in two pieces.

Remove the power ball-pin through the end of the tube and examine the ball-cup spacer through the power ball-pin hole in the tube. If the pin has touched and distorted the edges of the spacer these must be lightly punched back into shape, so that the tube threads will not be damaged as the spacer is slid out of the tube.

Remove the spring locking clip from inner ball cup-holder and using tool HY10 first tighten the cup-holder one eighth-of-a-turn to release the thread and then remove the cup-holder and ball-cup.

Remove the manual ball-pin; to do this it may be necessary to move the valve housing slightly and this can be done by removing the banjo bolt and using the ram rod as a slide hammer to move the valve housing.

Screw the anchor ball loosely on ram rod. Place a suitable container under ram to catch the oil then use the ram as a slide hammer by giving the anchor ball a few sharp jerks to pull the inner tube and valve housing out of the outer tube. If the valve housing is tight in the outer tube this is probably due to the vice gripping the ram too tightly.

Removing Inner Tube from Spool Valve Housing: Hold the spool valve housing in a vice, fitted with soft jaw grips, and use the ram rod as a slide hammer to pull the inner tube off the valve body.

Removing Ram Rod Seal Housing: This is only necessary if the ram rod seals, inner tube or ram rod are to be renewed. Grip anchor ball in a vice and, whilst holding the tube, slide seal housing against the piston a few times until the inner tube is pulled off the housing.

Removing the Ram Rod Seals: Remove split pin and nut from ram rod then pull the ram rod

out of seal housing, removing the piston at the same time. Remove lip scraper and circlip from seal housing then lever out the seals, noting the position of each as it is removed.

Assembling the Ram: Thoroughly clean all components and renew any which show signs of wear or damage. Discard all 'O' rings and seals; seal pack 962168 includes a complete set of new seals for each type of ram.

Fitting New Ram Rod Seals: Fit seal expander in bottom of the housing counterbore then fit gland seal using tools HY13 and HY9 as shown in Fig. 46. Ensure seal expander remains central in the bore before pushing the gland seal into position. The ram rod can now be withdrawn and the remaining seals fitted in the order shown. Replace the circlip, smear the inside of seals with grease and, using seal protector HY13, fit ram rod in housing. Slide scraper seal on ram rod then carefully push it into place in the housing.

Inner Tube Replacement: If the inner tube has been removed from the bearing housing, carefully press the plain end of tube on to the housing shoulder.

Piston Replacement: Smear inner tube and piston with clean oil then fit piston in the tube, recess outwards. Carefully compress the piston ring then push piston into the tube and on to the ram rod. Fit the flat washer and nut. Hold the rod by using a spanner on the two flats on the rod and tighten the nut until the split pin can be fitted. Do not overtighten the nut as this will distort the piston. A tightening torque of 60 lb ft (8·29 kg metres) is sufficient.

Spool Valve and Housing: Examine valve spool and housing bore. If these are scored or show signs of seizure, they must both be renewed. Spools and housings are not available separately but must always be replaced by a matched pair.

A scored spool is caused by dirt in the oil and if a valve assembly has to be replaced because of scoring the cause of the oil contamination should be investigated and rectified in order to avoid a recurrence.

Examine the corners of spool 'O' ring groove. If the corners are sharp very carefully remove the sharp edge with an oil-stone, so that it will not cut the 'O' ring (Fig. 47). It is important that only the

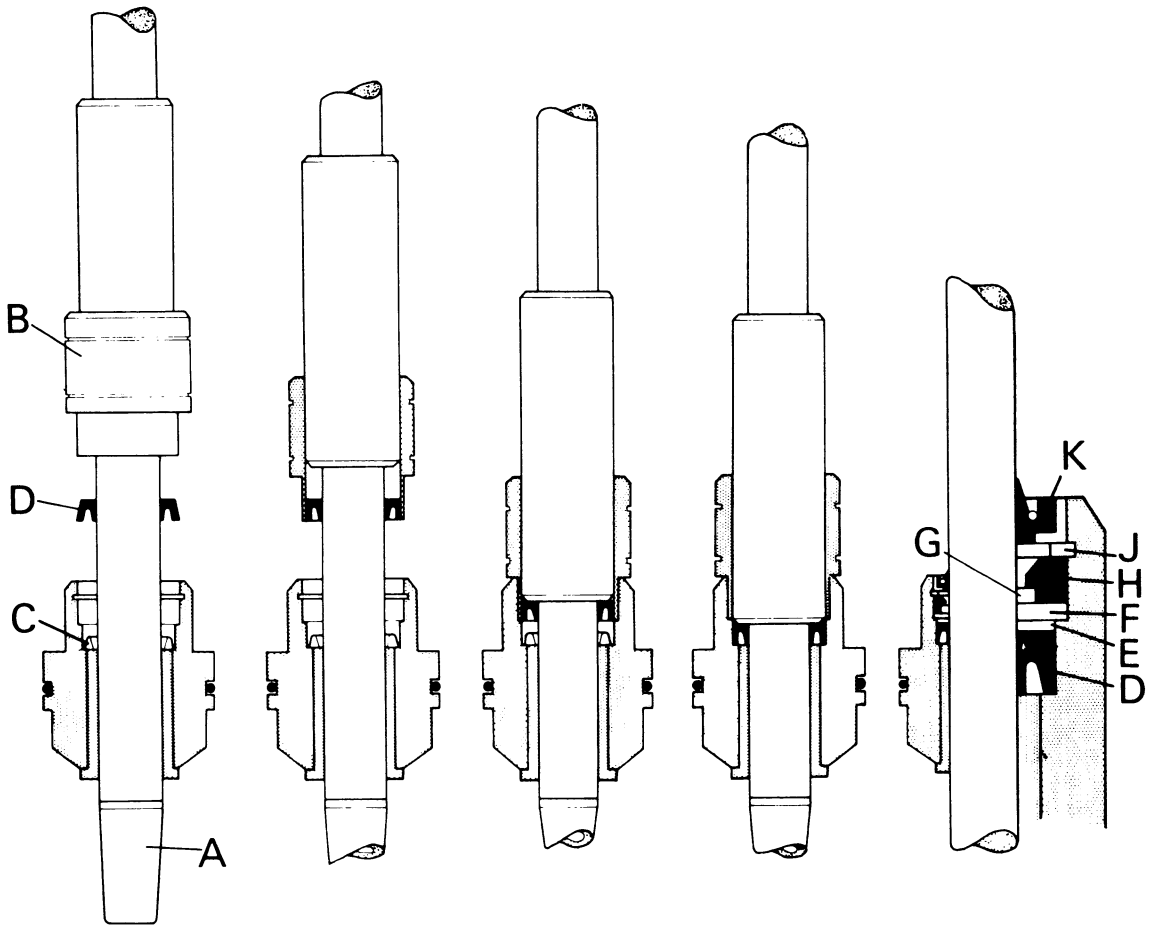

Figure 46. FITTING NEW RAM ROD SEALS

A. Seal protector HY13
B. Seal replacer HY9
C. Seal expander
D. Gland seal
E. Vellumoid washer
F. Metal washer
G. Scraper ring
H. Housing (scraper ring)
J. Circlip
K. Scraper seal

smallest amount of metal is removed: the chamfer must not be more than 0·010 in. (0·25 mm) wide. Excessive stoning will cause rapid 'O' ring failure, due to the ring being extruded from the groove.

The spool valve may be lapped into the housing with metal polish. After lapping remove all traces of polish and lightly oil. The spool should be an easy sliding fit in the housing bore but without side play or rock.

Spool Valve Housing 'O' Ring: If the corner of the ring groove is rough, or sharp, lightly stone in the same manner as the 'O' ring groove in the spool. If leakage or extrusion of the 'O' ring has occurred, carefully examine the outer tube bore for any scoring or damage adjacent to the 'O' ring position.

On 1200 Tractor rams also check the condition of the tube chamfer: the chamfer must not be rough or scored. Also check the position of the 'O' ring.

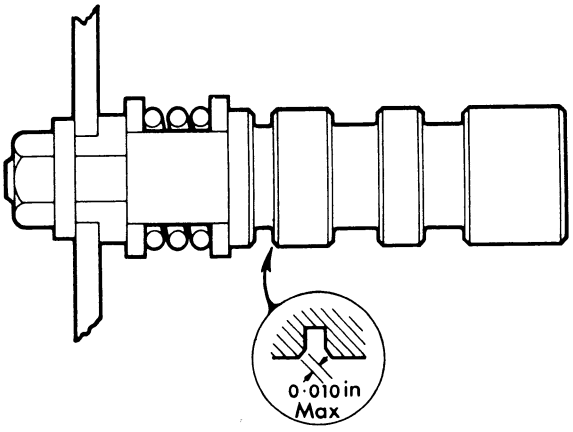

Figure 47. VALVE-SPOOL 'O' RING GROOVE

Groove corner must not be sharp but chamfered to a maximum width of 0·010 in. (0·25 mm)

When installed the ring must be between the return port and the tube chamfer (Fig. 48). If the ring is visible through the return port or is not clear of the chamfer it will leak when under pressure.

Reaction Spring: The tension of the reaction spring determines the effort required at the steering wheel to operate the valve. When stripping a ram to rectify heavy steering always check the reaction spring tension (Fig. 49). Different reaction springs have been used at different times but the current recommendations are as follows:

1200 Tractor: Only use 960776 spring. Do not use a weaker spring as this would make the steering over-sensitive.

990 – 880 Tractors: The current spring, 962057, should be used. The previous spring, 961984, fitted up to Tractor No. 990/497691 and 880/540164, should be discarded and replaced by the later spring.

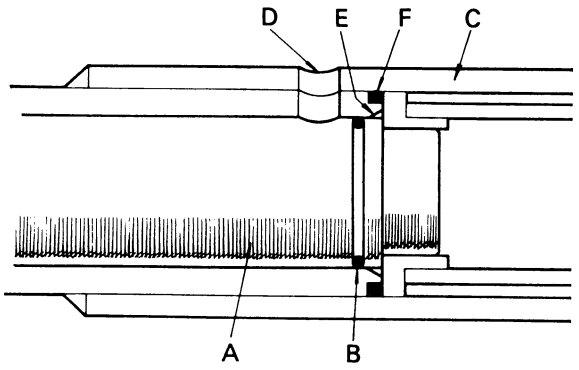

Figure 48. VALVE HOUSING 'O' RING

A. Valve housing B. 'O' ring C. Outer tube
D. Inlet port E. Tube chamfer (1200 only)
F. Outer tube 'O' ring (1200 only)

780 – 770 Tractors: Spring 961984 can be fitted in place of spring 962057 if heavy steering is experienced.

Assembling the Spool Valve Housing: Fit the relief valve ball and spring: fit a new 'O' ring on the plug before screwing it firmly into position. Replace the housing end-cover, fitted with a new 'O' ring, and circlip. Renew the housing locating pin, if damaged, and fit a new 'O' ring on the valve housing.

Fit a new 'O' ring on the spool, replace the reaction spring and washers followed by the collar, spacer and operating sleeve. Fit the flat washer and nut, tighten the nut and fit the split pin. Ensure that the spacer is fitted so that the hole through the spacer is opposite the grease-nipple hole in the valve housing — note that there is an unused hole in the housing. Slide the spool into the valve housing, grease the locating sleeve and slide this over the operating sleeve, then place the assembly in a clean place until required for fitting into the ram.

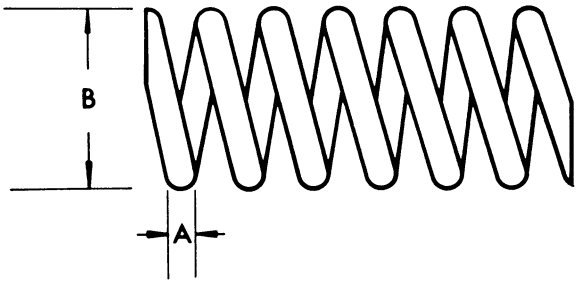

Figure 49. REACTION SPRING DETAILS

Part No.	960776	962057	961984
Tractor	1200	990–880	780–770
A. Wire dia.	0·090 in.	0·080 in.	0·100 in.
B. Outer dia.	0·900 in.	0·775 in.	0·875 in.
Load (assembled)	35 lb	25 lb	50 lb
Can be compressed by hand	Yes	Yes	No

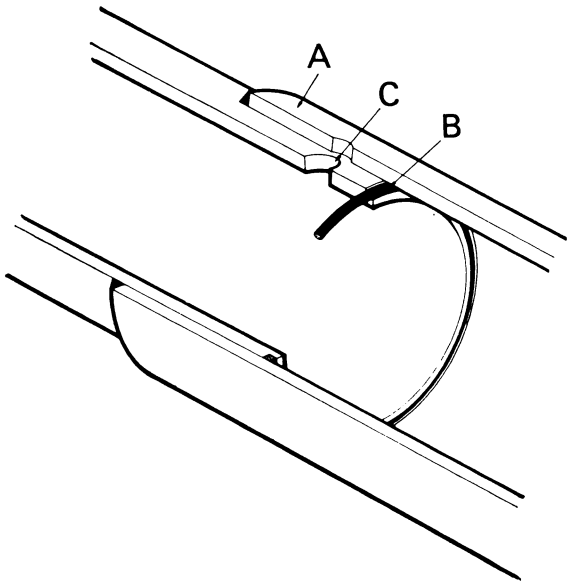

Figure 50. OUTER TUBE 'O' RING — 1200

A. Outer tube B. 'O' ring C. Inlet port

Outer Tube 'O' Ring — 1200 Tractors Only: An 'O' ring is fitted inside the outer tube on 1200 Tractor rams. This 'O' ring is shown in Fig. 50 and should not be removed unless leakage is suspected, and only then if a suitable tool is available to fit the new ring.

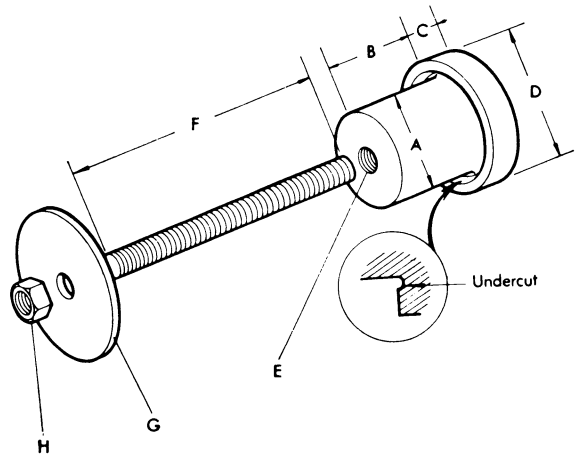

Figure 51.

TOOL FOR FITTING NEW OUTER TUBE 'O' RING

A. 2·000 – 1 995 in. (50 80 – 50·67 mm)
B. 2 in. (50 80 mm)
C. $\frac{1}{4}$ in. (6·35 mm)
D. 2 245 – 2 240 in. (57 02 – 56 90 mm)
E. $\frac{3}{8}$ UNC × 1 in. (25 mm) deep
F. $\frac{3}{8}$ UNC × 8 in. (203 mm)
G. $2\frac{3}{4}$ in. dia. × $\frac{3}{16}$ in. thick (70 × 5 mm)
H. $\frac{3}{8}$ UNC nut

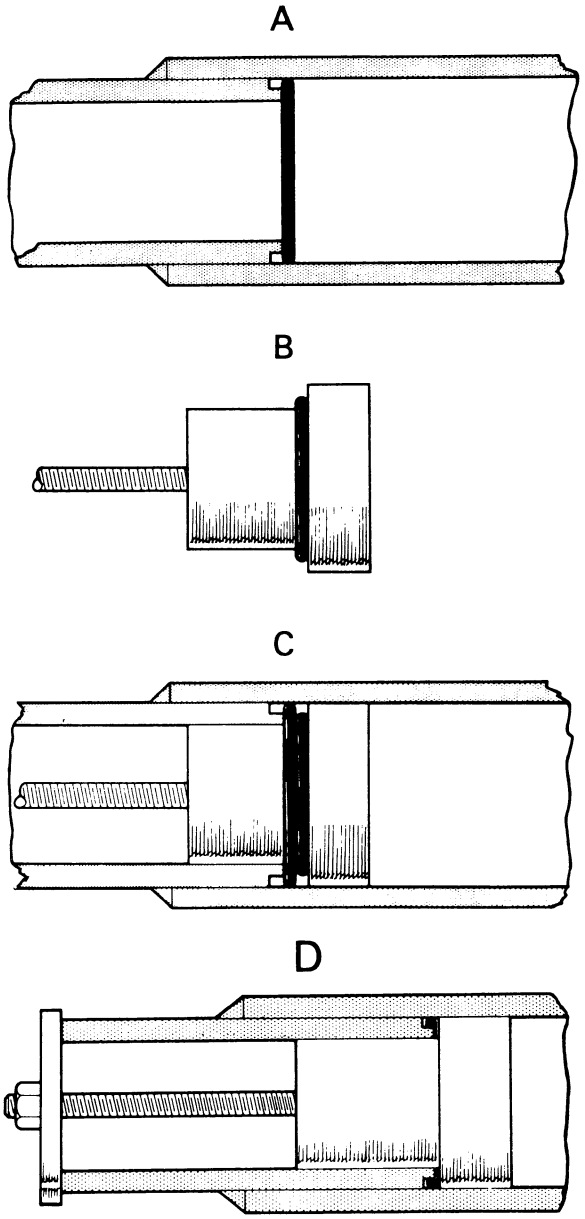

Figure 52. FITTING A NEW OUTER TUBE 'O' RING

A. Place the new ring inside the tube
B. Fit a discarded 960806 against the tool shoulder
C. Push the tool into the tube until the two 'O' rings meet
D. Tighten the nut to squeeze the 'O' ring into position

The easiest way of removing the 'O' ring is to soak the ring in tricoethylene until it disintegrates and can then be shaken out. Another method is to use a $2\frac{1}{4}$ in. hole saw, ground so that the saw has an outside diameter of 2·235 in. (56·77 mm) and is 0·030 in. (0·76 mm) thick. If the saw is attached to a suitable long handle and turned by hand (do not turn with a power drill) the ring will be cut cleanly out of the groove.

Fitting a new 'O' ring in the outer tube is a tricky operation and the simple tool shown in Fig. 51 must be used.

After cleaning the inside of the tube with cleaning fluid, smear the 'O' ring with jointing compound such as Wellseal, then fit the ring inside the tube (Fig. 52A).

Wipe the tool clean and fit a discarded valve housing 'O' ring, Part No. 960806, against the tool shoulder (Fig. 52B).

Insert the tool into the outer tube and push it inwards until the two 'O' rings are pushed together (Fig. 52C).

Fit the large flat washer and nut then firmly tighten the nut to pull the 'O' ring into position (Fig. 52D). Remove the tool, after allowing it to remain in position for at least five minutes, then carefully check that the 'O' ring is correctly fitted.

Assembling the Cylinder: Fit the inner tube on the spool housing : align the slots in the tube with the locating pin and oil-hole in the housing, then carefully tap the tube into position with a wooden block.

On 1200 rams fit the locating collar between the inner tube and housing.

Clean out the outer tube and fit Service Tool HY12, or HY14 on 1200 rams, over the anchorage end of the tube, to prevent the housing 'O' rings being damaged by the tube thread (Fig. 53). An alternative method is to completely fill the threads with thick grease. Smear the housing 'O' rings with oil and slide the housing into the outer tube until the ram-rod seal-housing 'O' ring has entered the tube and the valve housing can be located by temporarily fitting a banjo and banjo bolt. *Do not push the valve housing so far into the tube that the 'O' ring reaches the return port* as the ring will be damaged when the housing is pulled back into position.

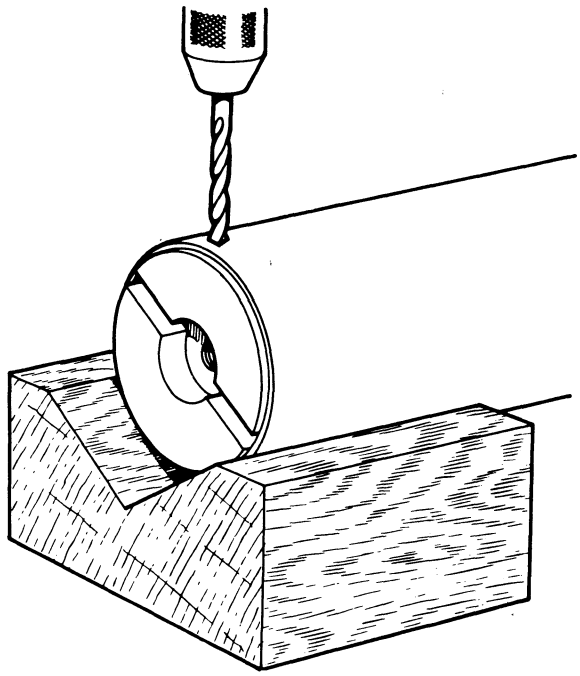

Figure 54. DRILLING SPLIT-PIN HOLE THROUGH OUTER TUBE

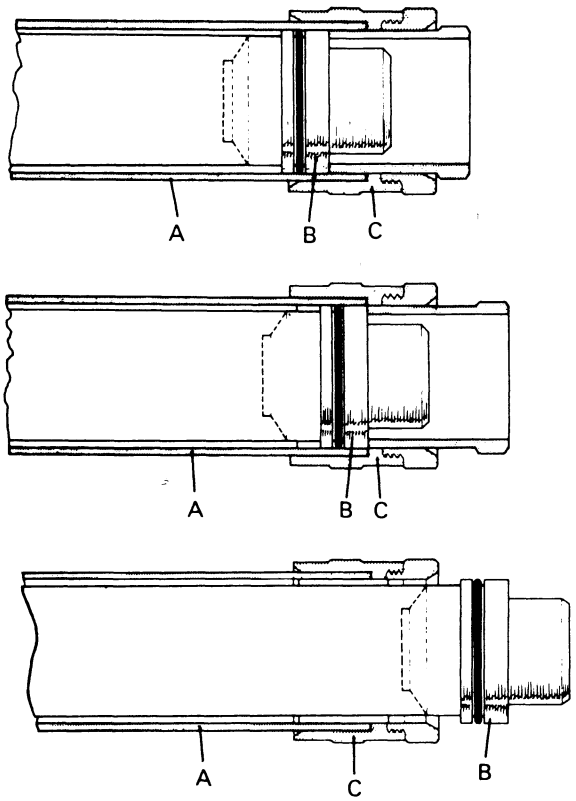

Figure 53.
FITTING BEARING HOUSING INTO OUTER TUBE

A. Outer tube B. Seal housing
C. 'O' ring protector (HY12 or HY14)

Remove the 'O' ring protector and fit locking ring into tube. Screw the ring in until the ports in valve housing are in the centre of the hole in tube.

On 1200 rams, position the valve housing ports in the centre of tube aperture then tighten the locking ring to hold locating collar against the tube 'O' ring.

Carefully grip the ram in a vice, as shown in Fig. 42. Replace the backing washer, smear the two Belleville washers with grease and place them in the ball cup as shown. Fit ball cup against the backing washer and replace the manual ball pin. Smear input ball cup with grease then fit it into cup holder and screw the holder into the end of operating sleeve. Check that the peg on manual ball is in the locating sleeve slot then fully tighten the cup holder, with Service Tool HY10, and unscrew one-eighth of a turn, so that the pin is held firm but can be moved by hand, before fitting the locking clip.

Fit the largest ball cup, followed by the power ball pin, spacer and locking ring. Using Service Tool HY11, firmly tighten the locking ring, taking care

that the spacer and spool housing do not move out of position. Tighten the locking ring at the ram-rod end, taking care that the valve housing ports are in the centre of the tube aperture.

Replace the remaining ball cup, smear the Belleville washers with grease and fit them as shown. Replace the end cover, firmly tighten, then unscrew one-eighth of a turn so that the ball pin is held firm but can be moved by hand.

Drilling the Outer Tube: If the locking ring slots are not opposite the split-pin holes in the outer tube do not unscrew the locking ring but scribe the position of the required hole, then unscrew the ring a quarter-of-a-turn and drill through the tube (Fig. 54). The locking ring can then be retightened and a split pin fitted. Do not drill through the tube without first unscrewing the locking ring as the tube threads will be damaged when the drill breaks through the tube.

Fit a new rubber dirt excluder and ball housing on the ram rod and then fit the anchor ball. Ensure the anchor ball is fitted the original way round, otherwise the pin-hole will not be in line. Smear the threads with Loctite grade AV after degreasing and screw the ball into position then fit the spring pin.

Bolt the two halves of the anchor ball housing together, fitting shims so that the anchor ball is very lightly gripped between the two housings. Seal the ram ports, fit the ball-pin dirt excluders and lubricate through the grease nipples.

HYDROSTATIC POWER STEERING

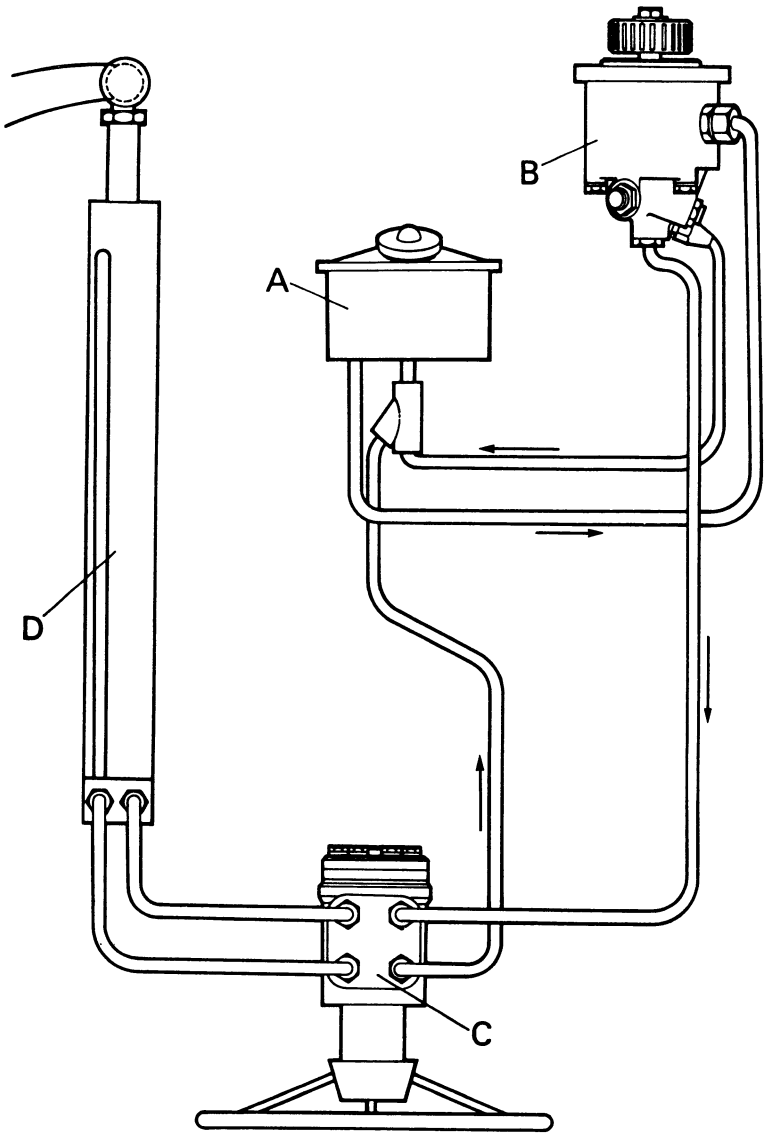

Figure 55.

SCHEMATIC ARRANGEMENT OF HYDROSTATIC STEERING

A. Oil reservoir
B. Pump
C. Servo valve
D. Hydraulic ram

Operation

Hydrostatic steering is an optional fitting on 1200 and 990 Tractors and consists of an oil reservoir, engine-driven pump, servo valve and double-acting hydraulic ram. The servo valve is connected to the steering wheel and mounted in the place normally occupied by the steering-box. The double-acting ram is mounted on the left-hand side of the tractor and attached to the left-hand steering lever. The front wheels are therefore steered hydraulically and there is no mechanical connection between the steering wheel and front axle.

The pump draws oil from the reservoir and circulates it to the servo valve. When the steering wheel is stationary the valve directs pump output to the reservoir and closes both connections to the ram. The pump then only circulates oil at low pressure and the ram is hydraulically locked, to hold the front wheels in a fixed position.

When the steering wheel is turned the servo valve directs oil to the appropriate side of the ram and connects the opposite side of the ram to the reservoir. A rapid build up of pressure then takes place and a pre-determined volume of oil is pumped into the ram to turn the wheels a fixed amount. As the volume of oil passed through the valve is dependent on the amount of steering wheel movement, the front wheels move in direct response to the steering wheel, in exactly the same manner as they would if they were connected by mechanical linkage, but all the steering effort is supplied by the pump, the

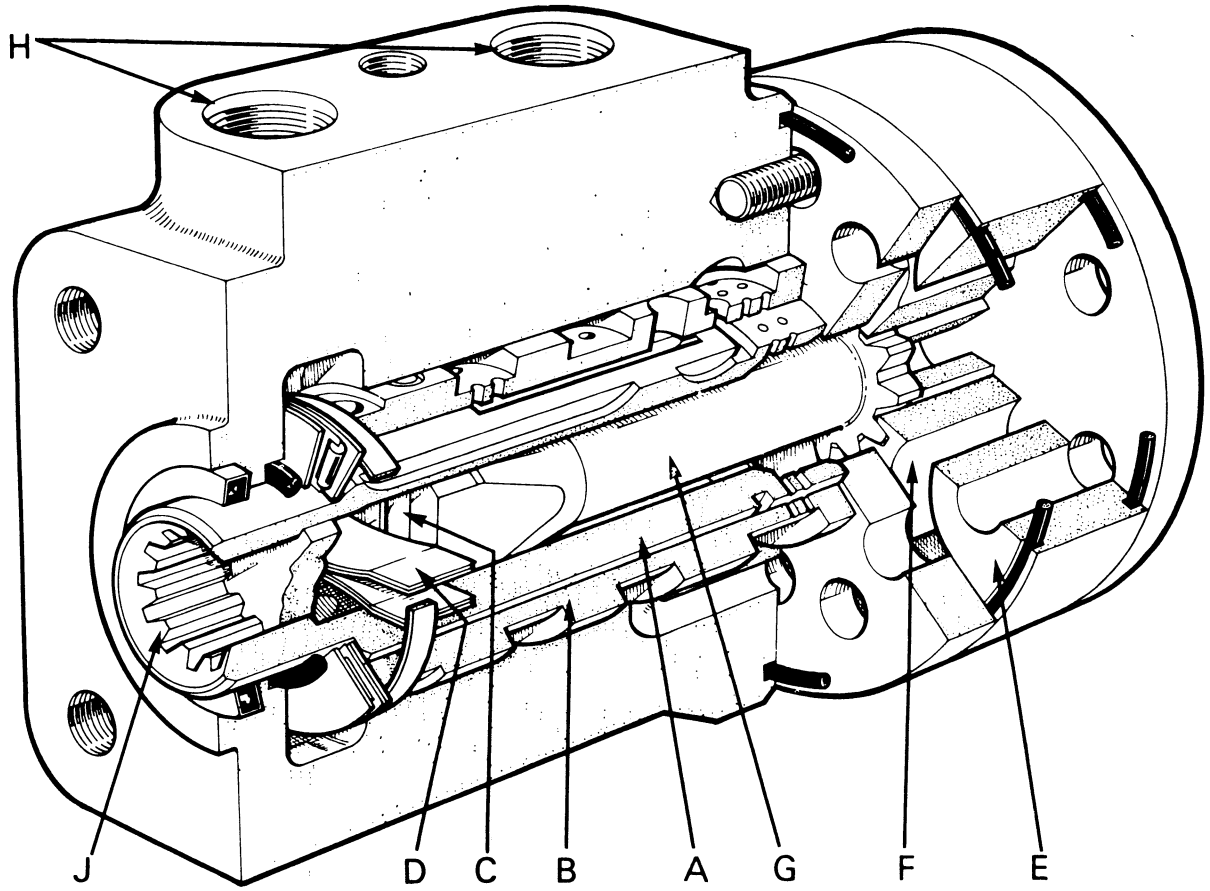

Figure 56. STEERING SERVO VALVE

A. Inner sleeve
B. Outer sleeve
C. Drive pin
D. Centering spring
E. Stator
F. Rotor
G. Shaft
H. Pipe connections
J. Steering column and spline

effort at the steering wheel being only sufficient to turn the servo valve.

If for any reason the pump fails to deliver oil pressure the tractor can be steered manually. If this occurs, turning the steering wheel will not only direct oil into the ram cylinder but the metering unit in the servo valve will act as a pump, so that the front wheels will be steered in the same way as they are when power operated but the effort required to steer the wheels must be applied to the steering wheel.

Operation of Servo Valve

The servo valve consists of two units: a rotary valve and a metering unit. The rotary valve consists of an inner sleeve which is connected to the steering wheel, and an outer sleeve connected to the metering unit. The outer sleeve is free to rotate in the valve body and connected to the metering unit shaft by a pin which passes through the clearance holes in the inner sleeve. The two sleeves can therefore revolve together, but relative movement between the sleeves is limited by the diameter of the clearance holes in the inner sleeve and resisted by a centering spring, which holds the inner sleeve so that the outer sleeve peg is in the centre of the clearance holes (Fig. 56).

When the steering wheel is stationary the centering spring therefore holds the inner sleeve in a neutral position, so that the ports in both sleeves line up to close both ram connections and divert pump output to the reservoir. When the steering wheel is turned the inner sleeve overcomes the tension of the centering spring and turns so that the sleeve ports are changed to direct pump output to one side of the ram, via the metering unit, and the other side of the ram is connected to the reservoir.

The metering unit consists of an outer stator, which has seven lobes, and a rotor having six lobes. The stationary stator is bolted on the end of the valve body but the inner rotor is free to revolve inside the stator and connected to the outer sleeve pin by means of a short shaft. As the rotor has less lobes than the stator it cannot fit centrally in the stator but must always be disposed off centre so that when it rolls inside the stator it will follow a circular path and the spaces between the inner and outer lobes will increase and then decrease as the

rotor rolls. If oil is fed into the spaces on one side of the rotor it will therefore be pushed round and operate as an hydraulic motor.

When the steering wheel is turned the inner sleeve is turned but initially the outer sleeve remains stationary so that the sleeve ports are lined up to direct pump output to one side of the rotor and the other side of the rotor connected to one side of the ram. Pump pressure then rises until it is sufficient to turn the rotor and push the oil from the outlet side of the rotor into the ram cylinder. As the rotor follows a circular path inside the stator it will also turn — one lobe for each revolution — and in doing so turn the outer sleeve and change the sleeve ports to shut off the pump output to the rotor and direct it to the reservoir.

Movement of the rotor, and therefore the volume of oil fed to the ram, is entirely dependent on the amount of steering wheel movement. The further the wheel is turned, the further the rotor must revolve to restore the outer sleeve to its neutral position. The front wheels are therefore turned to exactly follow the movement of the steering wheel, but the only effort required to turn the wheel is the small effort required to overcome the centering spring tension and displace the two sleeves.

As the volume of oil required to fully extend the steering ram is greater than the volume required to fully retract it, due to the presence of the ram rod in the front end of the cylinder, the number of steering-wheel turns into full left-hand steering lock will be greater than the number of wheel turns required to reach full right-hand lock. This does not affect the steering in any way and is not noticeable when driving the tractor.

If, for any reason, the pump fails to deliver oil, turning the steering wheel will displace the two sleeves but the rotor and, therefore, the outer sleeve, will not turn. As the relative movement between the two sleeves is limited to eight degrees in either direction, by the diameter of the clearance holes in the inner sleeve, turning the steering wheel more than eight degrees with the pump inoperative will cause the inner sleeve to turn the rotor, via the outer sleeve peg and the connecting shaft. When this occurs the operation of the rotor will be changed from a motor to a pump. The ball valve in the valve body will be lifted off its seat so that oil can be drawn into one side of the rotor and then pumped in the normal way to the steering ram. Under these conditions the steering ratio is the same as when operating under power but the actual effort required to steer the tractor must be applied to the steering wheel.

Maintenance and Service

The pump and valve components operate with very small clearances and it is therefore essential that great care is taken to prevent dirt and foreign matter entering the system.

When filling or topping up the oil reservoir always clean the cover before removing the filler cap, and ensure that all containers, funnels, etc., are clean.

The oils recommended for use in hydrostatic power steering are:

Amoco	Amoco Indoil 15
BP	Energol HL65

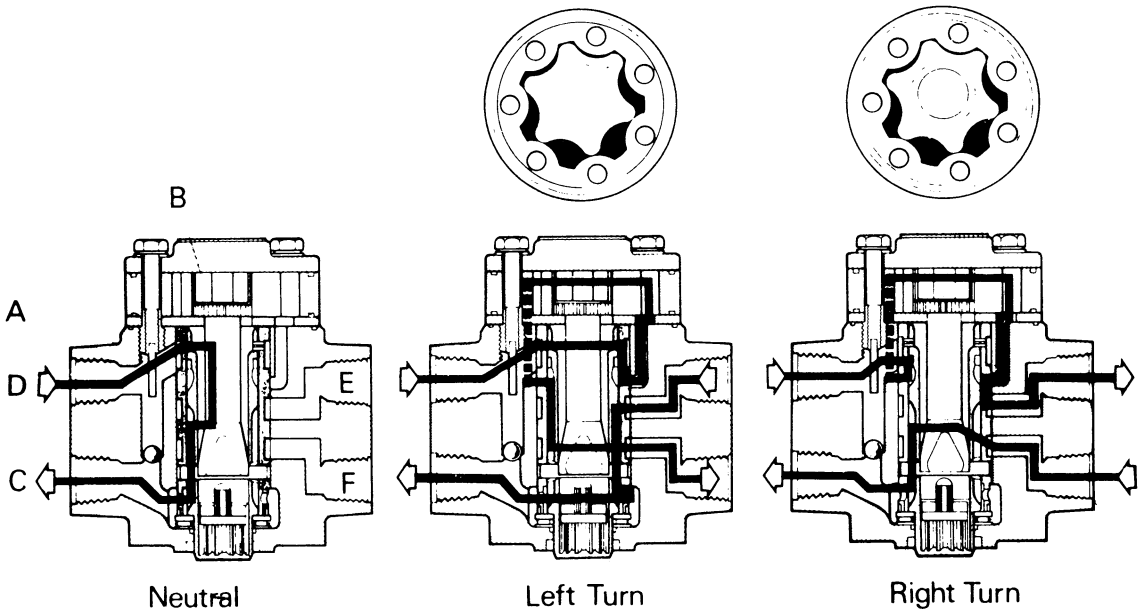

Figure 57. OIL FLOW THROUGH SERVO VALVE

A. Valve unit
B. Metering unit
C Return to reservoir
D. Feed from pump
E. Ram connection (left-hand)
F. Ram connection (right-hand)

Castrol	Hyspin AW32 (formerly Hyspin 70) Agricastrol ATF Castrol TQ (Overseas)
Esso	Esso Automatic Transmission Fluid Nuto H44
Mobil	Mobilfluid 200
Shell	Tellus 27

In areas where none of the above brands are available Grade H10 oil should be used. *Vegetable oils,* such as brake and shock absorber fluid, *must not be used.*

When carrying out the tractor maintenance include the following items:

Every Day:

1. Wipe the reservoir top, remove the filler cap and check the dipstick reading. If necessary, top up to the 'F' mark on the dipstick with a recommended grade of oil.
2. Inspect all pipes and connections for any signs of oil leakage, paying particular attention to the flexible pipes and ram cylinder. If there is any oil leakage rectify this immediately. *Do not use the tractor if there is any sign of oil leakage: the steering will not operate if the oil level falls so low that the pump draws air.*

Every 500 Hours:

1. Wipe the outside of the reservoir clean, then drain the oil by disconnecting the inlet pipe to pump and turning the pipe outwards, to direct the oil into a suitable container. Drain the oil, remove the breather pipe and oil trap, release the two hose clips and remove the bolts attaching the reservoir to the bracket. Remove the reservoir and plug the open ends of the pipes. Remove the retaining bolt in the centre of the reservoir cover, lift off the cover, remove the spring, lift out the separator which floats on the oil and remove and discard the filter element. Wash the separator and the inside of the reservoir with clean paraffin or diesel fuel and leave to drain. Do *not* wipe with a cloth. *Fit a new filter element.* Replace the separator, filter cap and spring, fit a new sealing ring into the cover, make sure this seats correctly in the groove, fit the cover and replace the retaining bolt. Position the cover so that filler cap aperture is on the opposite side to the mounting bracket, then tighten the bolt to 4 lb ft (5·5 kg metres). Refit the reservoir and reconnect the pipes. Fill the reservoir to the 'F' mark on the dipstick with new oil of a recommended grade then vent the system to remove air.
2. Wipe the pipes clean so that they can be inspected for any signs of leakage or damage. The flexible pipes must be free from kinks or cracks and the steel pipes must not foul on each other, or on any obstruction. Pipe movement caused by engine vibration can rapidly damage a pipe if it is close to a sharp obstruction.
3. Check the tightness of pipe unions, steering column bolts and the bolts attaching ram anchor bracket to main frame.

Venting the System:

1. First fill reservoir to within $\frac{3}{8}$ in. (10 mm) of the filler rim then replace filler cap and jack up the tractor so that the front wheels are raised clear off the ground. This will allow the system to operate at the lowest possible pressure.
2. With the fuel cut-off control in the Stop position, use the starter to turn the engine over for 10—15 seconds, to prime the pump, then check the reservoir oil level.
3. Start the engine and run at idling speed. Turn steering wheel one full turn in each direction several times but do not allow the front wheels to reach full steering lock.
4. Check the reservoir oil level again, then, with the engine running at idling speed, turn the steering wheel so that full steering lock is reached several times in each direction. Do not hold the front wheels against the steering-lock stops for more than a few seconds at a time.
5. Lower the front wheels to the ground. Check the oil level and top up to the 'F' mark on the dipstick, then drive the tractor at low speed in a figure-of-eight to check the steering action. The steering should operate smoothly and without hesitation.

Fault Finding

Faulty operation may be experienced if dirt is allowed to enter the system, or if units receive damage due to neglect or abuse. If incorrect operation is suspected the following checks will enable the fault to be located as quickly as possible.

Heavy Steering: First check that this is not due to a mechanical fault such as a seized king-pin or steering joint, then check the pump pressure (see Page 37). If the pump pressure is satisfactory check the valve unit and ram (see Page 37).

Delayed Steering Action: If the front wheels are not steered immediately the wheel is turned more than 2°, this is probably due to the presence of air and the system should be vented.

Erratic Steering Action: First check that there is no mechanical binding and then vent the system. If the valve assembly has been disturbed, erratic steering can be caused by incorrect rotor timing.

Front Wheels Steer in Wrong Direction: Check that the ram pipes are connected correctly; they may have been reversed at the ram end or valve end. If the valve unit has been disturbed the rotor timing may be incorrect.

Steering Wheel Continues to Operate as a Motor: This is due to the outer sleeve being unable to centre itself and can be caused by dirt jamming the sleeves or broken centering springs.

Steering Wheel Creep: When the front wheels reach full steering lock the steering wheel will also reach the end of its travel, in exactly the same way as mechanical steering. The steering wheel will not, however, lock solid as a very slight leakage will take place inside the valve unit and allow the wheel to creep round. A small amount of steering wheel creep is, therefore, quite normal but if wheel creep exceeds 4 rev/min when a torque of 12 lb ft (1·6 kg metres) is applied to the steering wheel excessive leakage is taking place in the valve unit or ram.

Steering Wander: If the front wheels do not remain in a set position when driving the tractor with the steering wheel stationary, first check the ram piston seals and if there is no leakage past these check the valve for internal leakage.

Complete Loss of Steering: First check the level of oil in the reservoir and then vent the system (see Page 36). If the steering still does not operate satisfactorily, or difficulty is experienced in raising sufficient pressure to vent the system, blank off the two ram cylinder pipes and check the amount of slip in the valve unit.

On early units not fitted with a separator in the oil reservoir, loss of steering may be due to aeration of the oil. Where this occurs, allow the system to stand for $\frac{1}{2}$ hour then vent and fit a separator to prevent recurrence.

Steering Rattle: With the engine running and an assistant turning the steering wheel half-a-turn in each direction alternately, check the ball joints on the ram and track-rod for play. Also check the tightness of the two steering lever bolts and the bolts attaching the ram anchor bracket to the main frame.

Repair Operations

Checking the Pump Output Pressure: Disconnect the pump outlet pipe and connect a suitable pressure gauge into the pump outlet port; this is threaded $\frac{9}{16}$ UNF. With the engine-stop control in the Stop position, spin the engine over by means of the starter and note the gauge reading. *Do not start the engine when making this test* if the valve spool is jammed closed with dirt the pump may lock solid and damage the timing gears. If the pump fails to reach its set pressure (see Page 41), or if the pressure reached is so high that it stalls the starter motor, remove and examine the pump (see Page 20).

Checking the Ram Cylinder: Turn the steering into full right-hand steering lock then disconnect the inner flexible ram pipe: this is the pipe leading to the back of the ram piston. Start the engine and turn the steering wheel to the right. This will pressurise the front of the ram piston and oil leaking past the piston seals will flow out of the open ram connection. If no oil flows out of the open ram connection the piston seals are satisfactory.

Checking the Servo Valve: Disconnect the two flexible pipes from the ram. Unscrew the pipes from steel pipes then screw two $\frac{3}{4}$ UNF plugs (920826) into the ends of the steel pipes. With both pipes blanked off in this way and the engine running, the steering wheel should not turn faster than 4 rev/min, in either direction, when a torque of 12 lb ft is applied to the steering wheel nut. If the wheel turns faster than this there is internal leakage in the valve, probably due to dirt scoring the sleeves, and a service unit should be fitted. If the wheel cannot be turned faster than 4 rev/min the valve unit is satisfactory.

When making this test only hold the steering wheel against the centring spring long enough to make an accurate check: as the pump is working at full pressure prolonged operation may cause the pump to overheat.

Pump Removal and Replacement: The pump is mounted on the right-hand side of the timing gear carrier plate and driven by the camshaft gear. To remove the pump, first drain the oil from the reservoir, by disconnecting the inlet pipe from the pump and turning it round so that the oil runs into a suitable container, then disconnect the two remaining pipes. Remove the two setscrews attaching the pump body to the engine carrier plate and withdraw the pump rearwards.

Replace the pump in the reverse order of removal. Fit a new gasket on the pump flange and mesh the drive gear before fitting the retaining bolts. Reconnect the pipes, refill the reservoir with new oil then start the engine and vent the system (see Page 36).

Dismantling and Assembling the Pump: As the Plessey balanced rotor pump used on hydrostatic steering is the same pump as used on 1200 power-assisted steering, refer to Page 20 for details of pump overhaul.

Removing and Replacing the Servo Valve: Drain the oil by disconnecting the inlet pipe from the pump, then wipe the valve pipe connections clean. Disconnect the four pipes from the valve unit and remove the bolts attaching the support bracket to the gearbox cover so that the complete column and bracket assembly can be removed.

On 1200 Tractors the steering column supports the rear of the fuel tank so it is necessary to raise the rear of the fuel tank and support the tank before withdrawing the assembly rearwards.

On 990 Tractors the hand throttle lever passes through the instrument panel and it is therefore necessary to remove the lever from the lower end of the hand lever spindle then unscrew the Nylon nut at the top of the spindle, so that the hand lever can be withdrawn out through the instrument panel.

After removing the complete column and support bracket from the tractor, remove the four bolts in the base of the column. These bolts pass through the support bracket and into the valve unit and when removed allow the valve unit, support bracket and steering column to be separated.

Replace the valve in the reverse order of removal, assembling the column and bracket then bolting the

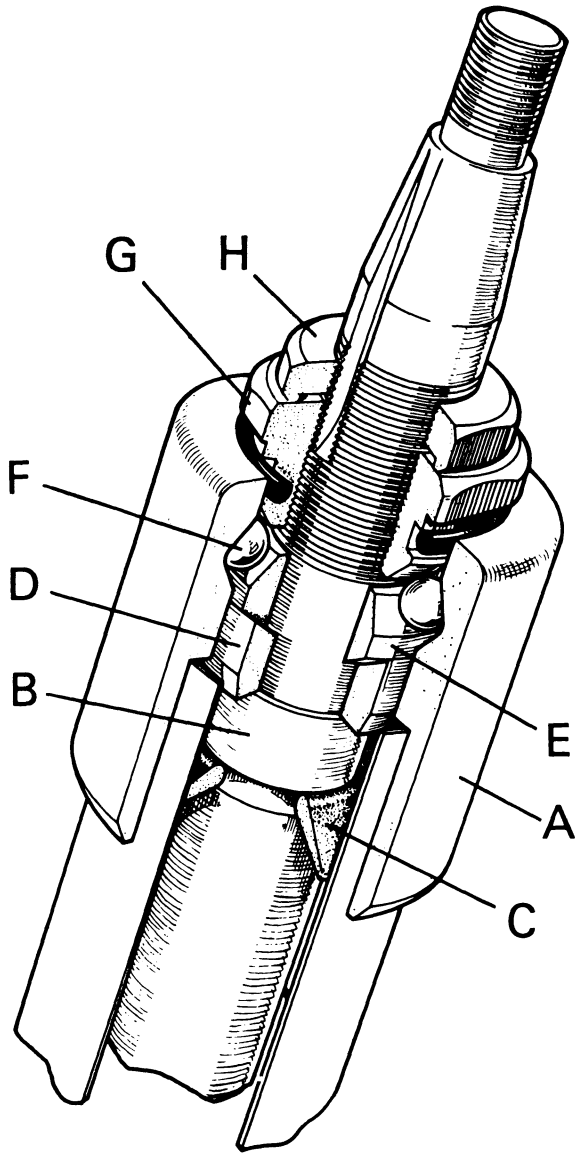

Figure 58. STEERING COLUMN UPPER BEARING

A.	Column	B.	Shaft	C.	Oil baffle
D.	Spherical seat	E	Lower bearing cone	F.	Steel balls
G.	Adjustable bearing cone			H.	Locknut

bracket in position. Ensure that the pipe connections are connected in their original positions and finally vent the system (see Page 36) before checking the operation of the steering.

When fitting a new service valve unit always clean out the reservoir and fit a new filter element (see Page 36) before refilling the system with new oil.

Steering Column Upper Bearing: Pre-loading the column bearing will cause heavy operation of hydrostatic steering. The play should be maintained between 0 and 0·003 in. (0 and 0·076 mm). Screw down the adjustable cone bearing until it just contacts the balls then unscrew $\frac{1}{8}$th turn to give the correct end float. Hold in this position with a $1\frac{1}{2}$ in. AF spanner and tighten the locknut to 120 lb ft (16·6 Kg metres). (Fig 58). Note: the locknut 924967 has a recess on one side which must be fitted against the bearing cone. This locknut does not require a tab washer.

To dismantle the bearing, remove the domed nut and flat washer then withdraw the steering wheel. Do not attempt to remove the wheel by means of a hammer and drift as this will damage the wheel covering, but use a 3-jaw extractor which fits underneath the wheel boss. After removing the wheel remove the dirt excluder and unscrew the locknut. Whilst holding the shaft upwards, to prevent the steel balls falling down the tube, unscrew the bearing cone then carefully pull the shaft upwards to push the balls out of the tube. Do not attempt to pull the shaft too far out of the tube as this will displace the oil baffle.

To assemble the bearing, smear the steel balls with grease and then fit them into the tube groove. Screw the bearing cone on to the shaft until it contacts the balls then fit the locknut: *recessed side of the nut against the bearing cone.* Adjust the cone so that there is no play in the bearing then slacken the cone $\frac{1}{8}$th turn and, holding the cone stationary in this position, tighten the locknut. Fit the dirt excluder and replace the steering wheel. Do not overtighten the steering wheel nut as this will make subsequent removal difficult; a tightening torque of 20 lb ft (2·76 kg metres) is sufficient. Lubricate the bearing through the grease nipple.

Hydraulic Ram: To remove the ram assembly disconnect the two pipes and ball joints. The easiest way of disconnecting the ball joints is to release the locknut on the front joint and then turn the ram rod until it is screwed out of the joint. The complete ram can then be turned to unscrew the rear joint.

Ram Ball Joints: The ball joints at each end of the ram are self-adjusting and do not require lubrication. If a joint develops wear, or becomes seized due to the ingress of water, the joint should be renewed. When replacing joints screw the front joint into the full depth of thread in the ram rod sleeve then tighten the locknut. Screw the rear joint into the case until the centre-to-centre distance between the joints is 27 in. (68·6 cm) when the ram is fully retracted, then tighten the locknut.

Stripping the Ram: Drain the oil by holding the ram with the pipe connections downwards and moving the ram rod over its full stroke to pump out the oil. Remove the two circlips from inside the front end of the outer tube then use the ram rod as a slide hammer to pull the sleeve out of the case. After withdrawing the ram rod out of the case, hold the ram rod by gripping sleeve D in a soft jaw vice — *do not grip the rod in a vice* — and remove the piston nut. Slide the sleeve off the rod and remove the sealing rings from piston and sleeve (Fig. 59).

Assembling the Ram: Clean and examine the case and ram rod. These must be very smooth and free from score marks, otherwise the seals will be unable to prevent the leakage.

Anti-Extrusion Rings: The leather anti-extrusion rings should be soaked in light engine oil for 30 minutes before fitting, to allow the rings to be

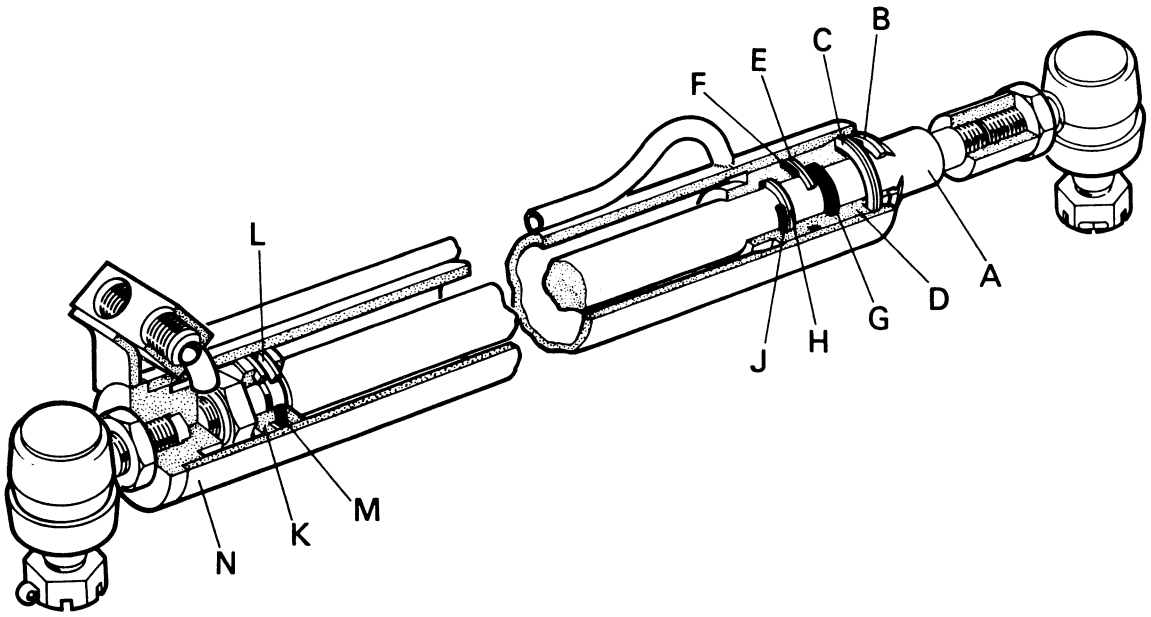

Figure 59. HYDROSTATIC STEERING RAM

A. Ram rod
B. Scraper seal
C. Circlips
D. Sleeve
E. Anti-extrusion ring
F. 'O' ring
G. Nu-lip sealing ring
H. and L. Anti-extrusion rings
J. and M. 'O' rings
K. Piston
N. Ram cylinder

stretched, and then allowed to dry for 30 minutes before assembly. Fit the leather rings before the 'O' rings and always place the hair grain side of the leather ring against the 'O' ring.

The piston and ram rod should have any sharp edges carefully removed with a stone and then throughly cleaned. Fit the sleeve and piston seals, smear the ram rod with clean oil and then fit it through the lip scraper and sleeve seals. Place the piston on the ram rod, chamfered end of hole against the rod shoulder, replace the nut and tighten to 100 lb ft (13·8 kg metres). Grip the ram rod sleeve when tightening the nut; do not grip the ram rod in a vice.

Ensure the inside of the ram case is clean and smeared with oil then carefully slide the piston and sleeve into position. Push the sleeve into the case until the tapered shoulder seats in the case recess then fit the two circlips. Check that the circlips are fully seated in the case groove and their ends positioned diametrically opposite.

If the cylinder is not to be fitted on the tractor immediately, plug the pipe connections to prevent dirt entering the cylinder.

DIMENSIONAL DATA

Front wheel alignment

All models	$\frac{1}{16}$ to $\frac{1}{8}$ in	1·6 to 3·2 mm

Hub bearing clearance

All models	0·001 to 0·003 in	0·02 to 0·08 mm

Stub axle journal diameter

1200, 990 and 880 — heavy duty axle, upper	1·5005 to 1·5000 in	38·11 to 38·10 mm
1200, 990 and 880 — heavy duty axle, lower	1·7490 to 1·7485 in	44·52 to 44·41 mm
990 and 880 — standard axle, upper and lower	1·374 to 1·3735 in	34·89 to 34·88 mm
780 and 770 — standard axle, upper and lower	1·252 to 1·251 in	31·80 to 31·77 mm
780 — Highway axle, upper	1·252 to 1·251 in	31·80 to 31·77 mm
lower	1·374 to 1·3735 in	34·89 to 34·88 mm

Stub axle bush bore

1200, 990 and 880 — heavy duty axle, upper	1·5015 to 1·5025 in	38·14 to 38·16 mm
1200, 990 and 880 — heavy duty axle, lower	1·751 to 1·753 in	44·49 to 44·55 mm
990 and 880 — standard axle, upper and lower	1·375 to 1·376 in	34·92 to 34·95 mm
780 and 770 — standard axle, upper and lower	1·2515 to 1·2555 in	31·78 to 31·79 mm
780 — Highway axle, upper	1·2515 to 1·2555 in	31·78 to 31·79 mm
lower	1·375 to 1·376 in	34·92 to 34·95 mm

Stub axle end float

	0·003 to 0·025 in	0·08 to 0·63 mm

Trunnion pin diameter

1200, 990 and 880	1·500 to 1·499 in	38·10 to 38·05 mm
780 and 770	1·000 to 0·999 in	25·40 to 25·38 mm

Trunnion pin bush bore

1200, 990 and 880	1·5015 to 1·5025 in	38·14 to 38·16 mm
780 and 770	1·0015 to 1·0025 in	25·44 to 25·46 mm

Steering cross-shaft journal diameter

1200	1·5005 to 1·5000 in	38·11 to 38·10 mm
990, 880, 780 and 770, large diameter	1·252 to 1·251 in	31·80 to 31·77 mm
small diameter	1·003 to 1·002 in	25·48 to 25·45 mm

Steering box bush bore

1200	1·5015 to 1·5025 in	38·14 to 38·16 mm
990, 880, 780 and 770, large	1·2515 to 1·2555 in	31·78 to 31·79 mm
small	1·002 to 1·005 in	25·45 to 25·53 mm

Steering-nut ball-peg pre-load

All models	0·001 to 0·003 in	0·02 to 0·07 mm

Steering column top-bearing clearance

All models	0·001 to 0·002 in	0·02 to 0·07 mm

Power-assisted steering pump

Tractor model	Pump type	Pump description	Maximum flow gal/min	Maximum flow litre/min	Maximum pressure lb/sq in	Maximum pressure kg/sq cm
1200 and 990 from 800001	Plessey A3308562 (918993)	gear-driven balanced rotor	3·9	17·7	1000	70·3
990 to 800000	Hobourn Eaton HE3605/9035/19 (916345)	gear-driven roller	3·5	15·9	900	63·3
880	Hobourn Eaton HE3601/7035/36 (916602)	belt-driven roller	3·5	15·9	700	49·2
780 and 770	Hobourn Eaton HE3601/6035/36 (915578)	belt-driven roller	3·5	15·9	600	42·2

Power-assisted steering ram

Tractor model	Ram type	Bore	Stroke	Part No.
1200	Hydrosteer VC1400266/B	2·0 in 50·1 mm	13 7/16 in 34·9 cm	920350
990, 880	Hydrosteer VC1400203/C	1 3/4 in 44·4 mm	11 1/8 in 28·2 cm	915915
780, 770	Hydrosteer VC1400226/C	1 3/4 in 44·4 mm	9 1/2 in 24·1 cm	915483

Hydrostatic steering pump

Tractor model	Pump type	Pump description	Maximum flow gal/min	Maximum flow litre/min	Maximum pressure lb/sq in	Maximum pressure kg/sq cm
1200 and 990	Plessey A3308562 (918993).	gear-driven balanced rotor	3·9	17·7	1000	70·3

Hydrostatic steering valve

Tractor model	Valve type	Valve description	Displacement	Part No.
1200, 990	Orbitrol OSP100 150–0027	non-reactive open centre damped unit	6·10 cu in (100 cc) per rev	924898

Hydrostatic steering ram

Tractor model	Part No.	Bore	Stroke	Piston rod dia.
1200, 990	925302	1 7/8 in 47·16 mm	14 1/4 in 36·19 cm	1 in 25·4 mm

Tightening torques

Axle beam extension bolts		
1200, 990 and 880	100 lb ft	13·83 kg metres
780 and 770	140 lb ft	19·3 kg metres

Drop arm retaining bolt		
1200	120 lb ft	16·6 kg metres
990 and 880	30 lb ft	4·15 kg metres
780 and 770	75 lb ft	10·5 kg metres
Front extension bolts		
1200	75 lb ft	10·5 kg metres
990 and 880	50 lb ft	6·9 kg metres
Front wheel bolts		
All models	70 lb ft	9·67 kg metres
Hydrostatic steering ram piston nut		
1200 and 990	100 lb ft	13·83 kg metres
Hydrosteer steering ram piston nut		
All models	60 lb ft	8·29 kg metres
Reservoir retaining stud		
990	30 lb ft	4·15 kg metres
Reservoir cover bolt		
All models	5 lb ft	0·7 kg metres
Rocker arm clamp bolts		
1200	30 lb ft	4·15 kg metres
Roller pump pulley bolt		
990, 880, 780 and 770	20 lb ft	2·76 kg metres
Steering box bolts		
All models	30 lb ft	4·15 kg metres
Steering box end-cover bolts		
1200	20 lb ft	2·76 kg metres
Steering column flange bolts		
All models	50 lb ft	6·9 kg metres
Steering lever bolts		
1200, 990 and 880	120 lb ft	16·6 kg metres
780 and 770	80 lb ft	11·1 kg metres
Steering wheel nut		
All models	20 lb ft	2·76 kg metres
Twin rotor pump body bolts		
1200 and 990	30 lb ft	4·15 kg metres
Twin-rotor pump-drive gear nut		
1200 and 990	45 lb ft	6·22 kg metres

General tightening torques

The following torque figures apply to bolts of standard material with either coarse (UNC) or fine (UNF) threads and may be used for all bolts and nuts not listed in the previous table.

Thread diameter	Torque	
$\frac{1}{4}$ in	7 lb ft	0·97 kg metres
$\frac{5}{16}$ in	15 lb ft	2·07 kg metres
$\frac{3}{8}$ in	25 lb ft	3·46 kg metres
$\frac{7}{16}$ in	45 lb ft	6·22 kg metres
$\frac{1}{2}$ in	65 lb ft	8·98 kg metres
$\frac{5}{8}$ in	110 lb ft	15·2 kg metres
$\frac{3}{4}$ in	140 lb ft	19·3 kg metres

SUMMARY OF DESIGN CHANGES

Details of change	When introduced
Sealing of drop-arm shaft changed from rubber sleeve (626708) to 'O' ring (15596) and spacer (915707). Part number of steering box (914019) unchanged.	770/582062 (November 1965)
Centre beam support plate lengthened. Part number of centre beam (914718) unchanged.	770/583397 (May 1966)
Centre beam thrust sleeves increased in length from $\frac{3}{4}$ in. (19 mm) to $1\frac{1}{2}$ in. (38 mm). Part number of sleeves changed from 910633 to 917388. Part number of centre beam (914718) unchanged but as the depth of the counterbore has been increased, longer sleeves (917388) can only be fitted to axles incorporating the deeper counterbores.	770/584182 (June 1966)
Centre beam thrust sleeves (908612) replaced by thrust washers (917440) and diameter of hole in axle beam reduced so that trunnion pin (910632) will fit directly into beam. Part number of centre beam changed from 908605 to 917439.	880/534669 (July 1966)
Centre beam thrust sleeves (907824) replaced by thrust washers (915421) and diameter of hole in axle reduced so that trunnion pin (913091) will fit directly into beam. Part number of centre beam changed from 912712 to 915420.	990/491808 (September 1966)
Protective coils fitted on power-assisted steering ram pipes (913636 and 918947) : pipes re-routed to reduce possibility of damage to pipes. Ring dowels fitted on steering-box bolts to give more positive location of steering box on gearbox cover. Part number of box changed from 912409 to 920473 (990–880) and 914019 to 920352 (770).	990/494849 880/537883 770/585952 (December 1966)
Drop arm repositioned on steering-box cross shaft and length of drag link tube shortened by $1\frac{1}{2}$ in. (38 mm). Part number of drag link tube changed from 915986 to 923469.	1200/703530 (November 1967)
Plastic dirt excluder (923681) fitted under steering wheel to seal column top bearing against the ingress of water. Bearing locknut 903467 changed to 924907 and fitting of tabwasher 905189 discontinued.	1200/706046 990/803189 880/548643 780/601820 770/589643 (July 1968)
Offset of steering drop arm increased by $\frac{3}{8}$ in. (10 mm). Part number of drop arm changed from 913729 to 924970.	780/602231 770/590006 (September 1968)
Hydrostatic steering flexible pipes now fitted with protective coils. On 990 pipes are longer to facilitate fitting loaders. Previous pipes 763788 and 763069 changed to common pipe 928377.	1200/709585 990/813397 (August 1969)
Pressure relief valve setting in power-assisted steering pump reduced from 700 lb/sq in (49 kg/sq cm) to 600 lb/sq in (42 kg/sq cm). Part number of pump assembly changed from 916602 to 915578.	880/558752 4600/900471 (June 1970)
Oil separator, part number 940377, fitted in breather pipe and oil baffle, part number 929292, fitted in reservoir of hydrostatic steering system.	880 UMU/910049 990 UMU/890046 4600 UMU/915003 990/824919 1200/715383 (November 1970)
Ball socket (929057), with female thread, fitted on front end of steering ram. Part number of ram assembly changed from 925302 to 929055.	990/825524 1200/715902 (December 1970)

STEERING AND FRONT AXLE

CASE CORPORATION

Pub 9-37194

PRINTED IN U.S.A.

DANGER—Hydraulic equipment can be dangerous

FOR YOUR SAFETY

Before commencing work on the machine ensure all pressure has been released from the system.
Do not disconnect or work on any part of the system whilst the engine is running.
Never check for oil leaks with the hands and do not approach very close to a pipe, or component, suspected of leaking.
The most dangerous type of oil leak is a leak so small as to be almost invisible. A very fine jet of oil under a pressure far less than is used in hydrostatic power steering systems can penetrate the skin even through clothing, and cause PERMANENT tissue damage.
An oil injection through the skin is relatively painless and may not be noticed at the time. It may later become painful however, and give the impression of a cut which has become infected. If this occurs obtain medical attention immediately. The damaged tissues must be removed without delay otherwise the affected area will spread and major surgery may be required to prevent it becoming fatal.
Painful burns can be caused by only a small amount of hot oil coming into contact with the skin.

David Brown policy is one of continuous development and improvement and therefore the specification details may have been altered since this manual went to press.

Moreover, as the David Brown tractor is offered in a variety of forms to cover a large number of markets and applications, this manual may contain details of items not applicable to the particular tractor with which it is being used.

CONTENTS

SECTION	DETAILS	PAGE
Manual Steering		
	Unit Removal and Replacement	
	Drop Arm	E3
	Drop Arm Shaft	E4
	Front Axle	E2
	Front Hubs	E1
	Steering Box	E3
	Steering Column	E4
	Stub Axles	E1
	Unit Maintenance and Repair	
	Ball Peg Setting	E5
	Drag Link Length	E7
	Drop Arm Shaft Bearings	E9
	Front Hub Bearings	E7
	Front Wheel Alignment	E7
	Steering Column	E10
	Steering Column Bearing	E11
	Steering Stops	E8
	Stub Axle Bushes	E7
	Thrust Washers and Seals	E8
	Trunnion Pin Bushes	E8
Hydrostatic Power Steering		
	Fault Finding	E16
	How It Works	E13
	Unit Removal and Replacement	
	Front Axle	E17
	Front Hubs	E17
	Hydraulic Ram	E21
	Orbitrol Valve	E19
	Pump	E20
	Reservoir	E20
	Steering Column	E18
	Stub Axles	E17
	Unit Maintenance and Repair	
	Filter Element	E29
	Front Wheel Alignment	E24
	General Maintenance	E23
	Hydraulic Ram	E32
	Hydraulic Ram - Centralising	E24
	Orbitrol Valve	E30
	Pump	E26
	Ram Ball Joints	E33
	Steering Column Bearing	E25
	Track Rod Joints	E24
	Venting the System	E23
Specification and Data		E36
Summary of Design Changes		E37

NEW FORMAT

This new Steering and Front Axle section of the Service and Repair Manual is presented in a new style. This provides a step by step guide to the fitter for each operation, employing more use of illustrations which are, wherever practicable, directly related to the accompanying text by numerical annotations.

Each operation is titled with the component description and sub-titled according to the operation to be performed, Removal, Dismantling, Replacement etc., followed by the relevant illustration figure number. Each item number of the operation is directly allied to the appropriate component number in the illustration.

Example

Front Hub

Removal - Fig 1

1. Raise front of tractor and place suitable supports beneath axle beam extensions.
2. Remove front wheel, centre cover, gasket and split pin.
3. Remove stub axle nut and washer, withdraw hub from stub axle and remove outer bearing.
4. Prise oil seal from hub and remove inner bearing, discard oil seal.
5. Remove sleeve and dirt excluder.

Fig. 1

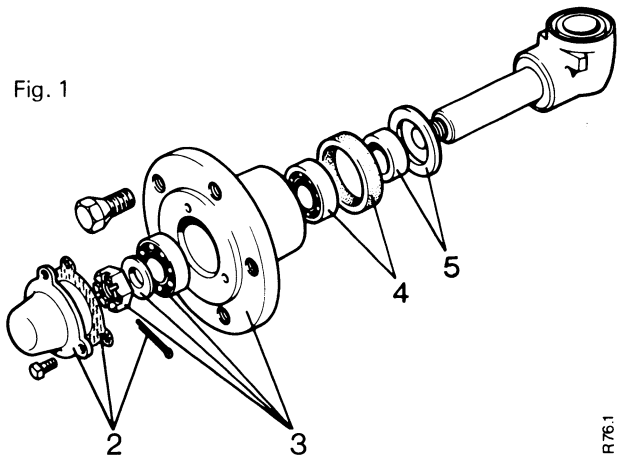

This method affects page layout only and the established sequence of operations is unchanged (''How it Works'', ''Unit Removal and Replacement'', Unit Maintenance and Repair'' etc).

Although new to David Brown Publications, this form of presentation is in use by other manufacturers in both the automotive and agricultural machinery industries. We have studied these and have, we feel, been able to improve on them and pass on the benefits to the user of the David Brown Service Repair Manual.

This section covers 885, 990 synchromesh, 995, 996, 1210, 1210 4WD Mk II, 1212, 1410 and 1412 tractors from first manufacture. Section E1 (Pub. 9-37191) should be retained for use relative to earlier Selectamatic tractors.

Instructional Drawings

The latest set of instructional drawings covers Front axle and steering. At the time of going to press two drawings are available: 9-38541 - Front Axle and Transfer Box : 1210 4WD Mk II tractor (two drawings).

STEERING AND FRONT AXLE

8, 9 and 12 series tractors are fitted with manually operated, light recirculating, ball type steering. The steering levers being directly coupled by gears and linkage to the steering column.

Hydrostatic power steering is an optional fitting on these tractors and is a standard fitting on the 1212 model, 14 series and all Q-cab tractors.

UNIT REMOVAL AND REPLACEMENT
MANUALLY STEERED TRACTORS

Front Hub Removal — Fig. E1

1. Raise front of tractor and place supports beneath axle beam extensions.
2. Remove front wheel, brake drums (if fitted), centre cover, gasket and split pin.
3. Remove stub axle nut (right-hand thread) and washer, withdraw hub from stub axle and remove outer bearing.
4. Prise out oil seal from hub and remove inner bearing, discard oil seal.
5. Remove sleeve and dirt excluder.

Replacement — Fig. E2

6. Refit inner bearing and press in new oil seal using a flat plate to ensure even fitment.

NOTE: Seal lip should face outwards unless front wheel brakes are fitted when lip should face inwards.

7. Pack inside of hub with grease and position hub on stub axle; ensure oil seal slides onto seal collar then replace outer bearing.
8. Refit flat washer and nut; tighten nut whilst rotating hub so that bearings are fully seated. Slacken nut one flat and fit split pin.
9. Fit new gasket and replace hub cover, pump grease through fitting until grease escapes past oil seal.
10. Refit front wheel and lower tractor to ground.

Stub Axle Removal — Fig. E3

The stub axles pivot in steel backed bushes in the beam extensions and are retained in place by the steering levers.

1. Raise front of tractor and place supports beneath axle beam extensions.
2. Remove front wheel, steering lever bolt and washer.
3. Refit steering lever bolt without washer until finger tight, unscrew two full turns, then with a solid support under beam extension, strike the bolt a sharp blow squarely on the head. This will release the steering lever from the stub axle taper.
4. Remove bolt, steering lever and stub axle.
5. Note positions of and remove thrust washer and bearing, remove and discard 'O' rings.

Replacement

6. Clean stub axle and fit new 'O' ring.
7. Smear bearing and thrust washer with grease and fit to stub axle.

Fig. E1

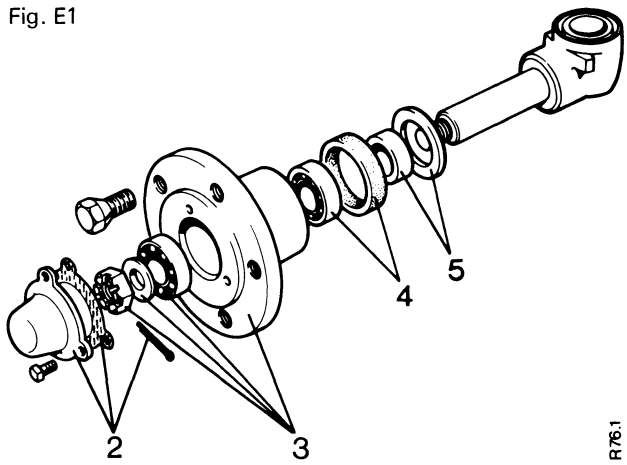

R76.1

Fig. E2

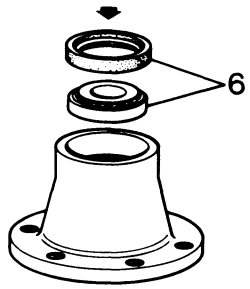

R76.2

Fig. E3

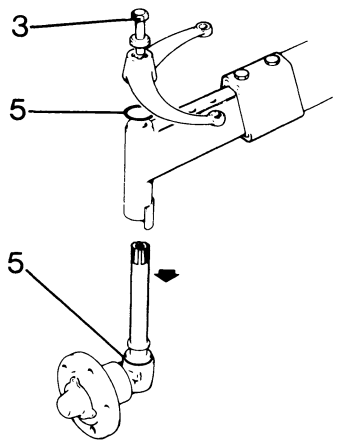

R76.3

8. Smear inside of stub axle bushes with oil and fit new 'O' ring.
9. Fit stub axle into beam and replace steering lever; ensure lever is fitted to correct splines and special washer is fitted to bolt.
10. Tighten bolt to 16.6 kg m (120 lb ft) then lubricate with SAE140 through fitting on front of beam extension.
11. Refit front wheel and lower tractor to ground.

Front Axle

Fabricated axles are a standard fitting on all tractors, but heavy duty forged axles were an optional fitting on 990 and 995 model tractors.

Removal — Fig. E4

1. Disconnect steering drag link and turn rearwards clear of work area.
2. Raise front of tractor and remove front wheels.
3. Place suitable supports under main frame, positioned as far forward as possible but clear of front axle.
4. Cut locking wire; unscrew trunnion pin locking bolt five full turns. Tap bolt head to push screwed sleeve clear of the trunnion pin then remove bolt.
5. Pierce welch plug and lever out of front extension.
6. With weight of tractor resting on supports and the jack supporting only the weight of the axle, pull trunnion forward clear of extension. There is a $\frac{5}{8}$ in UNC tapped hole in centre, front end of the trunnion pin to enable a slide hammer with an adaptor to be used for withdrawing the pin.
7. Lower axle to the ground ensuring jack is positioned so that axle does not tilt rearwards.

NOTE: Trunnion pins fitted to early model tractors were fitted from the rear of the main frame extension. To remove the front axle on these tractors it is necessary to remove the front extension from the main frame.

Replacement

8. Fit new 'O' rings on outside of thrust washers, then smear washers with grease and place in axle beam recess.

NOTE: Different thickness washers are available for tractors fitted with heavy duty front axles. The washers used should be of a size to require the two beams to be levered together in order to fit the front washer, giving a pre-load of 1.52 mm (0.060 in).

9. Place axle on jack and raise towards extension. Take care not to damage 'O' rings or displace thrust washers when entering beam into extension. Ensure beam remains level and when it is raised high enough, push a bar into extension to align holes.
10. Fit new 'O' ring on trunnion pin, smear pin with grease and push into extension.
11. Turn pin so that chamfered end of bolt hole is towards top then tap into position taking care not to damage extraction hole thread.
12. Replace locking bolt, fit screwed sleeve to bolt, then tighten bolt and lock with wire.
13. Fit new welch plug, grease trunnion pin bearings and refit front wheels; lower tractor to the ground.

Fig. E4

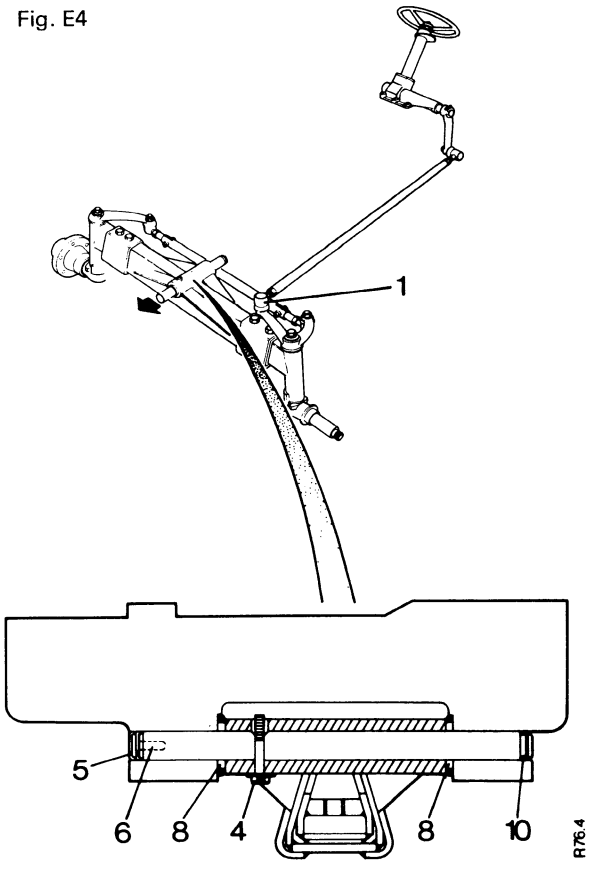

Steering Box

A recirculating ball type steering box is fitted to all models. The box case is bolted to the gearbox cover and is lubricated by an oil bath formed in the cover casting.

Removal — Fig. E5

CAUTION: Do not commence steering box removal by removing the four bolts from the base of the steering column and turning the steering wheel. This will turn the screw out of the nut and allow the steel balls to drop into the oil bath.

1. Remove bonnet top and drain oil from steering box 1210 model.
2. Remove instrument panel complete with fuel tank - 1210 model.
3. Disconnect throttle control and remove hand throttle lever - 9 series.
4. Remove bonnet then remove two rear bolts securing fuel tank support brackets to clutch housing - 8 and 9 series.
5. Raise instrument panel allowing tank to pivot on front bolts, then refit rear bolts under brackets to hold rear of tank clear of steering box bolts - 8 and 9 series.
6. Disconnect steering drag link from drop-arm.
7. Remove bolts securing steering box to gearbox cover.
8. Remove steering box complete with column and wheel; retrieve two ring dowels fitted between box and cover.

Fig. E5

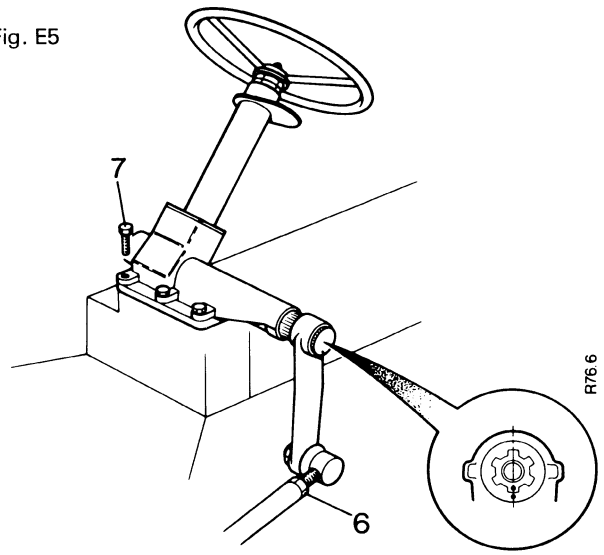

Replacement

9. Remove all trace of old gasket and thoroughly clean gearbox cover face.
10. Top up oil bath to a maximum of 25 mm (1 in) below cover face - 8 and 9 series.
11. Fit new gasket; locate box and secure to gearbox cover, tighten bolts to 4.0 kg m (30 lb ft).
12. Fill steering box with oil to the level of the filler plug - 1210 models.
13. Lubricate drop-arm shaft and column bearings through grease fittings.
14. Refit steering drag link to drop-arm.

Steering Drop-Arm 8 and 9 Series

Removal

The drop-arm is fitted on parallel splines and is retained by a clamp bolt.

1. Disconnect steering drag link from drop-arm.
2. Remove clamp bolt; note marking to ensure correct refitting and slide arm off shaft splines.

Replacement

3. Ensure that dust seal is in position then fit drop-arm shaft ensuring marks line up (Fig. E5).
4. Refit clamp bolt and tighten to 4.0 kg m (30 lb ft).

Steering Drop-Arm - 1210 Model

Removal

The drop-arm is fitted on taper splines and is retained by a washer and bolt in the centre of the shaft.

1. Disconnect steering drag link from drop-arm.
2. Remove retaining bolt and washer; refit bolt without washer, tighten bolt then unscrew two full turns. Note marking to ensure correct refitting.
3. Use a two jaw extractor to grip the arm and tighten the jacking screw against retaining bolt head until arm is pulled free.

Replacement

4. Ensure that seal is in position then fit drop-arm on shaft ensuring marks line up.
5. Refit washer and retaining bolt and tighten to 16.6 kg m (120 lb ft).

Drop-Arm Shaft - 8 and 9 Series

Removal — Fig. E6

The drop-arm shaft is retained by a large split pin through the rocker arm.

1. Lever out welch plug and remove rocker arm pin.
2. Tap shaft (from welch plug side) with a hammer and drift and remove shaft complete with drop-arm; remove rocker arm.

Replacement

Renew shaft if worn or twisted; a twisted shaft will allow the rocker arm to foul the case and may cause damage.

3. Smear inside of bushes with grease and wipe shaft clean.
4. Place rocker arm in steering box housing - positioned with split pin hole on opposite side of case to drop-arm.
5. If drop-arm is on shaft, ensure rubber shaft seals are in position.
6. Align split pin holes, push shaft into rocker arm and fit split pin.
7. Fit a new welch plug and apply a few shots of lubricant through grease fittings.

Fig. E.6

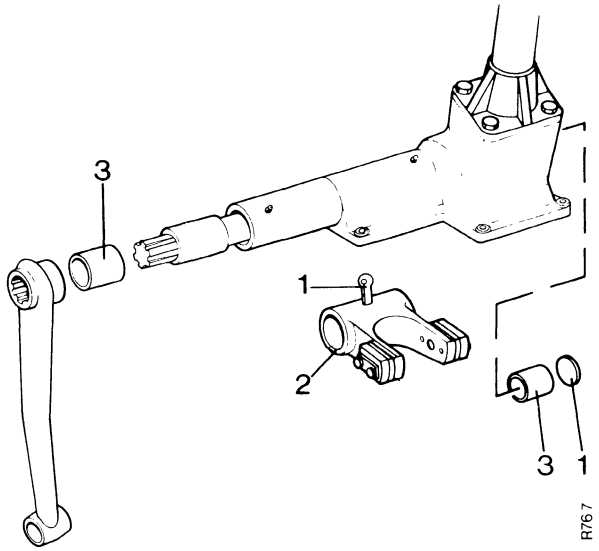

Drop-Arm Shaft - 1210 Model

Removal — Fig. E7

1. Remove steering drop-arm.
2. Remove four securing screws, shaft cover, thrust plate and shims.
3. Remove two rocker arm clamping screws then tap drop-arm end of the shaft, turning rocker arm frequently so that end bush will be pushed evenly out of casting by rocker arm key. Do not remove shaft by using a drift against thrust plate end.

NOTE: The rocker arm key will not pass through the drop arm side of the steering box housing.

Replacement

Renew shaft if worn or twisted; a twisted shaft will allow the rocker arm to foul the case and may cause damage.

4. Smear inside of bushes with grease and wipe shaft clean.
5. Fit shaft key and place rocker arm in steering box housing - positioned so that clamping screws can be fitted after shaft has been replaced. Tighten clamping screws to 4.0 kg m (30 lb ft).
6. Fit new 'O' ring into end of shaft then replace bush, thrust washer, shims and cover.
7. Ensure sufficient shims have been fitted to position rocker arm centrally under column aperture.
8. Fit cover bolts and tighten to 2.76 kg m (20 lb ft).
9. Refit steering drop-arm.

Fig. E7

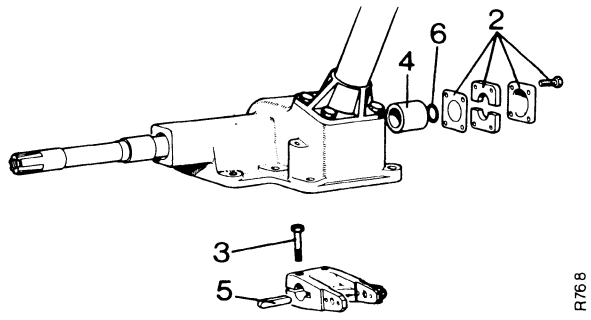

Steering Column

Removal

1. Remove steering box.
2. Lay box on bench and remove four bolts from ball pegs.
3. Remove ball pegs and retrieve shims, then remove four bolts from steering column flange.

4. Remove column from box and secure nut to screw with adhesive tape - to prevent the column nut being turned to the end of the screw and releasing the balls.

Replacement

5. Insert column shaft into steering box and position column nut so that transfer tube is on the opposite side to the drop-arm shaft.
6. Set column in correct position i.e. 8 and 9 series - with throttle lever bracket towards drop-arm side. 1210 model - with tank mounting bracket towards front of tractor.
7. Fit the four flange bolts and tighten to 6.9 kg m (50 lb ft).

Setting Ball Pegs — Fig. E8

1. Align steering nut and rocker arm peg locations.
2. Fit one peg with the original thickness of shims and fully tighten the screws.
3. Fit other peg without shims and tighten the screws until peg just commences to hold steering nut. Measure distance between peg flange and rocker arm face. Subtract 0.05 mm (0.002 in) from reading obtained and select shims to make up this thickness.

Example: If reading is 0.018 in then shim thickness required is 0.018 in minus 0.002 : Equals 0.016 in. This will give the required peg setting of 0.02 to 0.08 mm (0.001 to 0.003 in) preload.

4. Remove peg and fit shims of required thickness.
5. Fully tighten all screws then check that steering nut is central in rocker arm. If not, transfer shims from one side to the other.
6. When steering nut is central, firmly tighten the four screws then lock with a tabwasher or by centre punching according to type being serviced.

Fig. E8

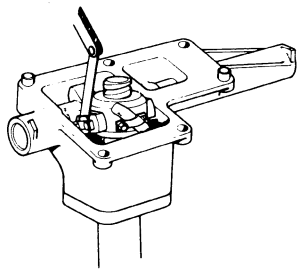

R76.9

Front Wheel Alignment — Fig. E9

The front wheels should be set so that they have 1.6 to 3.2 mm (0.062 to 0.125 in) toe-in when in the straight ahead position. This setting is determined by the length of the track rod, and if the track rod is disturbed, or if incorrect wheel alignment is suspected, the setting should be checked as follows.

1. Measure distance between wheel rims at points level with the wheel centres and parallel to the centre line of the front axle (A). The distance between the front of the rims should be 1.6 to 3.2 mm (0.062 to 0.125 in) less than the distance between the rear of the rims (B). If incorrect; adjust track rod length as follows:-
2. Release one lock nut and remove the track rod clamp bolt.
3. Turn the track rod so that the ball joint is screwed in or out as required.
4. Refit clamp bolt, tighten locknut then recheck wheel alignment.

As the track setting holes in the track rod are drilled the same distance apart as the holes in the beam extension, wheel alignment is not altered when the wheel track is changed. If the wheel alignment is correct at one track setting, it will remain correct at all track settings.

Fig. E9

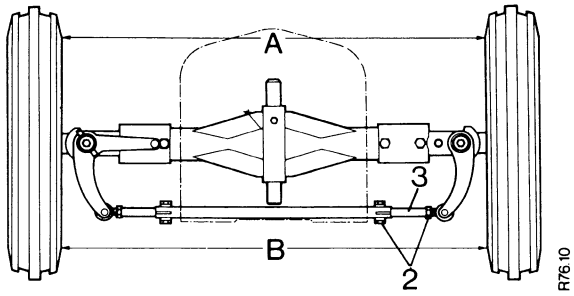

Drag Link Length

Setting

To obtain full steering lock in each direction and at all track settings, the drag link should be set so that the distance between the centre of each ball joint is as follows:-

885 - 116.84 cm (46.000 in)
990, 995 } 118.27 cm (46.562 in)
996 - 129.06 cm (49.687 in)
1210 - 133.35 cm (52.500 in)

Front Hub Bearings — Fig. E10

1. Remove front hub.
2. Remove both bearing inner tracks, clean inside of hub and examine bearings. If surfaces of rollers or bearing tracks are pitted or worn, bearing should be renewed.
3. Drive outer track from hub then press in track supplied with the new bearing - thinnest edge of track towards outside of hub - until firmly in hub recess.

NOTE: It is not necessary to renew both bearings if one is serviceable, but it is essential that the complete bearing is renewed.

4. Refit front hub.

Fig. E10

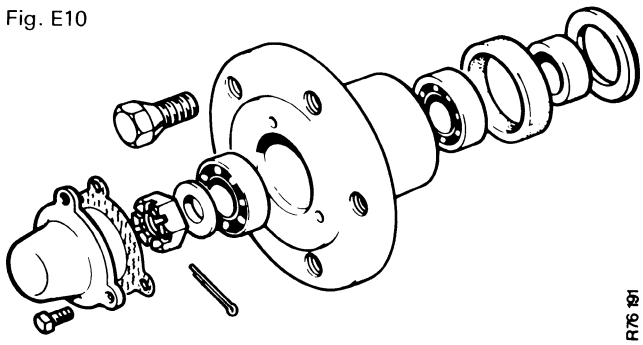

Stub Axle Bushes

Two stub axle bushes are pressed into each beam extension and these should be renewed if worn.

1. Remove stub axle.
2. Drive bushes out with a suitable drift, taking care not to damage bush locations.
3. Clean all components and remove any burrs from axle bores.
4. Press new bushes into position using a mandrel and holder made to the following dimensions. If a mandrel is used the bushes will not be damaged during fitting and reaming will not be necessary.

Mandrels — Fig. E11

Mandrel No.	A	B
1	28.45mm (1.120in)	25.77mm (0.995in)
2	34.80mm (1.370in)	31.62mm (1.245in)
3	37.97mm (1.495in)	34.80mm (1.370in)
4	41.15mm (1.60in)	37.97mm (1.495in)
5	47.50mm (1.870in)	44.22mm (1.745in)

Fig. E11

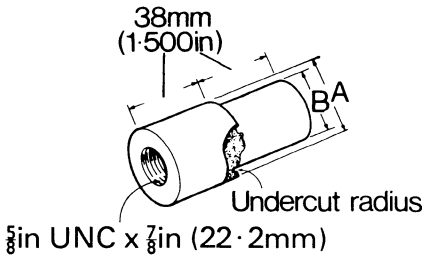

R76.11

Holder — Fig. E12

A. Mild steel bar 25mm (1.0in)
B. 30.5cm (12.0in)
C. ⅜in UNC x ¾in (19.50mm)
D. Stud ⅜in UNC x 1.½in (38mm)

Fig. E12

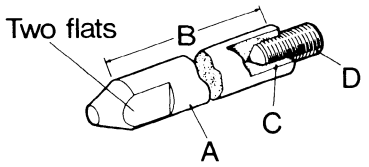

R76.12

Thrust Washers and Seals

990 and 995 models fitted with heavy duty front axles are fitted with roller thrust bearings. These bearings are fitted with a steel washer at each side and as two different types of bearing are supplied, ensure that correct washers are used. Thrust washers fitted to other tractors do not require steel backing washers. Always fit new bearings, washers and sealing rings when fitting new bushes.

Heavy Duty Front Axle Bearings and Washers — Fig. E13

A - Bearing 620180 (INA AXK 4565).
B - Thrust washers 626692.1mm (0.39in).
C - Bearing 620184 (Torrington NTA 284).
D - Thrust washers 626859. 1.5mm (0.060in).

Fig. E13

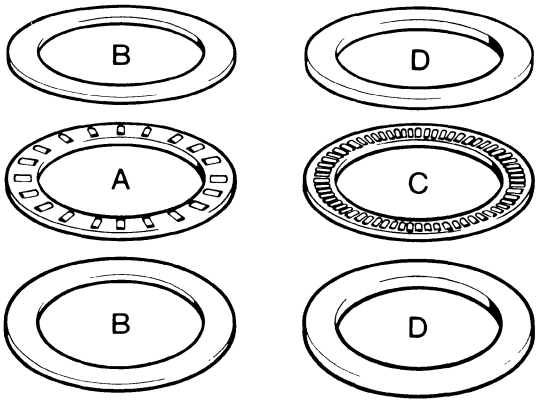

R76.5

Steering Stops — Fig. E14

Front wheel movement is limited by means of stops on the beam extensions. If the stops become worn remove the extension and build the stops up to the original shape with welding. If the steering box reaches the end of its travel before the stub axles touch the stops a heavy impact against the front wheels may damage the steering box casting.

Fig. E14

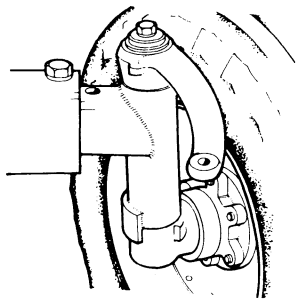

R76.13

Trunnion Pin Bushes — Fig. E15

The bushes may be driven out with a suitable sized mandrel, but where the bushes are in a blind hole they must be collapsed by driving a small round nose chisel down the side of the split and then extracted with pliers.

Fig. E15

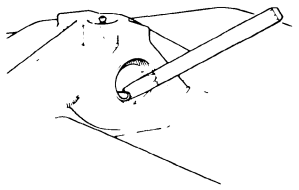

R76.14

Drop-Arm Shaft Bearings

885 model tractors are fitted with two bushes in the steering box case and these should be removed by pushing both bushes inwards with Service Tool 901724. Use large end of mandrel for drop-arm side bush and small end for other side (see Fig. E20).

9 Series tractors are fitted with three bushes and these can also be pushed out with Service Tool 901724 (Fig. E16). Slide mandrel into case and fit the horseshoe-recess towards large end of mandrel. Press both inner bushes out then remove horseshoe and withdraw mandrel. Replace horseshoe on mandrel then press outer bush through centre bush location so that it will not fall out when mandrel is withdrawn.

1210 Model tractors are fitted with two bushes and a needle roller bearing inside the drop-arm end of case (Fig. E21). The bearing can be levered out with the oil seal, but as the bearing will be damaged during removal do not remove unless it has to be renewed. The two bushes can be pressed inwards using mandrel No. 4 (page E8).

NOTE: If Service Tool 901724 is not available the centre bush can be removed by making a collar (Fig. E18) to the following dimensions and using this collar with mandrel No. 1 (page E8).

A-34.9mm (1.375in) B-25.4mm (1.000in)
C-31.7mm (1.250in) D-6.35mm (0.250in)
E-3.17mm (0.125in)

Fit new bushes in reverse order of removal. Ensure case bores are free from burrs and scratches, smear outside of bush with oil and use correct diameter mandrel so that it will not be necessary to ream the bushes after fitting.

On 8 and 9 Series tractors use Service Tool 901724 to press the bushes into position, ensuring that holes through bushes are opposite grease fitting holes in case.

On 1210 Model tractors use mandrel No. 4 to press centre bush into case and use mandrel of the following dimensions to fit new roller bearing (Fig. E19).

A-36.83mm (1.450in) B-47.50mm (1.870in)
C-54.0mm (2.125in) D-31.7mm (1.250in)
E-7.94mm (0.312in) F-12.7mm (0.500in)

Fig. E16

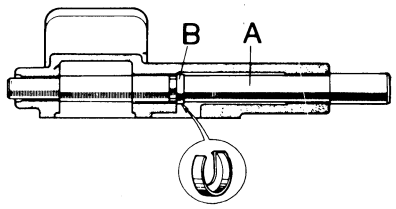

R76.16

A - Mandrel B - Horseshoe

Fig. E17

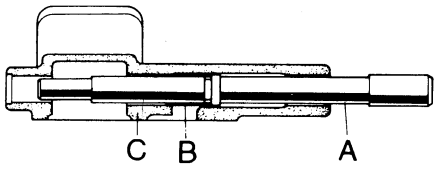

R76.17

A - Service Tool 901724 B - Outer Bush
C - Steering Box

Fig. E18

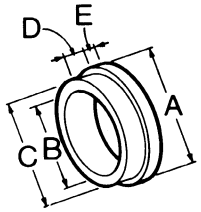

R76.18

Fig. E19

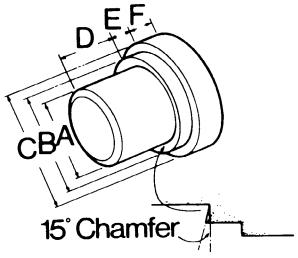

R76.20

Fig. E20

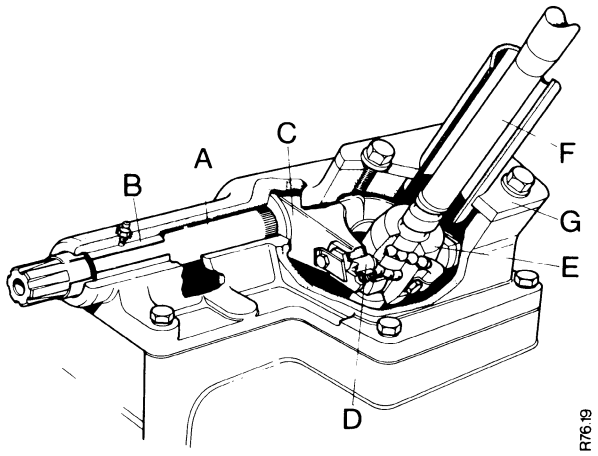

Steering Box - 885, 990, 995, 996
A - Cross shaft B - Bush C - Rocker arm
D - Ball peg E - Nut F - Shaft
G - Column

Fig. E21

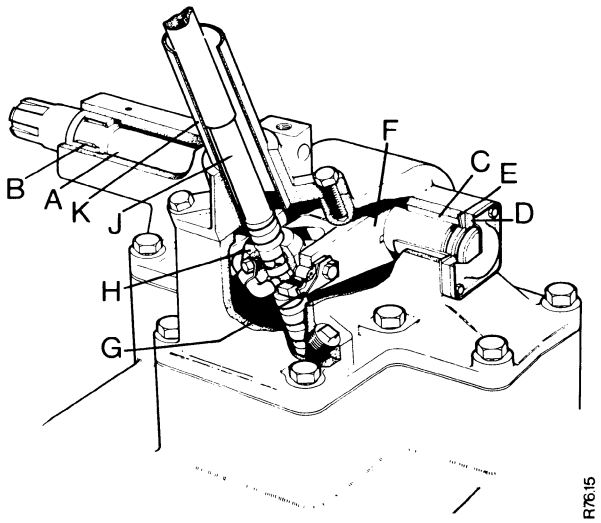

Steering Box - 1210
A - Cross shaft B - Roller bearing
C - Bearing bush D - Thrust plate
E - Shims F - Rocker arm
G - Ball peg H - Nut J - Shaft K - Column

Steering Column

Dismantling — Fig. E22

1. Remove steering column.
2. Remove domed nut and washer.
3. Remove steering wheel using three jawed extractor fitted beneath the wheel boss. Do not remove wheel with hammer.
4. Remove key from shaft and remove dirt excluder, locknut and adjustable bearing cone, discard 'O' ring.
5. Invert column over a suitable container to catch the steel balls, and withdraw screwed shaft out of column.
6. Remove lower bearing cone, spherical seating and rubber baffle from shaft.
7. Remove two bolts securing guide tube to column nut, then unscrew nut from shaft catching the steel balls as they are released.

Re-assembly

8. Fit rubber baffle, spherical seating and lower bearing cone in position on shaft.
9. Slide shaft into column and fit twelve steel balls, smeared with grease, and fit adjustable bearing cone with new 'O' ring, to hold steel balls in position, secure with locknut but do not tighten fully.
10. Assemble column nut. Smear steel balls with grease and fit them into the groove. Partly screw the shaft into the nut and continue fitting balls until groove is full.
11. Screw nut fully onto shaft, fit remaining balls in transfer tube and fit transfer tube to column nut.
12. Refit steering column.
13. Adjust steering column bearing.

Fig. E22

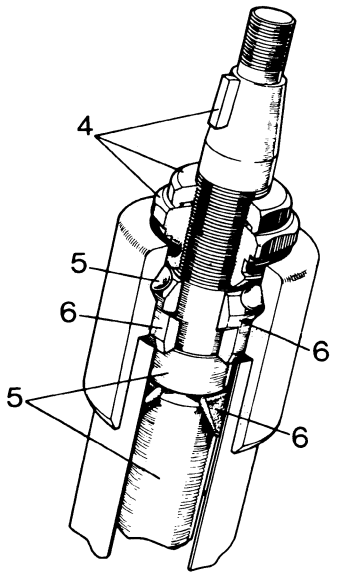

Steering Column Bearing

Adjustment

1. Screw down adjustable bearing cone until all play is taken up but without pre-loading the bearing.
2. Back off cone $\frac{1}{8}$th turn to give 0 to 0.76mm (0 to 0.003in) end float with shaft central in tube.
3. Hold cone in this position and tighten locknut to 16.6 kg m (120 lb ft). The locknut has a recess on one side which **must be fitted against cone.**
4. Fit dust excluder and shaft key then refit steering wheel and secure with washer and nut. Do not overtighten the wheel nut, a torque of 2.76 kg m (20 lb ft) is sufficient.

HYDROSTATIC POWER STEERING

HOW IT WORKS

Hydrostatic steering consists of an oil reservoir, hydraulic pump, servo valve (orbitrol unit), steering column and double-acting hydraulic ram. The oil pump is engine driven and therefore, is in operation whenever the engine is running.

The Orbitrol unit is attached to the base of the steering column, connected directly to the steering wheel.

The hydraulic ram is mounted as follows:-

8 and 9 series: Mounted on the left-hand side, attached to the left-hand steering lever.

12 series: Mounted on the left-hand side, attached to the left-hand steering lever.
In some territories these tractors are fitted with 14 series (transverse) steering rams.

1210 4WD Mk II: Mounted transversely behind the front axle at the left-hand side attached to the left-hand steering lever.

14 series: Mounted transversely behind the front axle connected to the stub axles by track rods.

The front wheels are therefore, steered hydraulically, there being no mechanical connection between the steering wheel and front axle.

The pump draws oil from the reservoir and circulates it to the Orbitrol valve. When the steering wheel is stationary the valve directs oil to the reservoir and closes both connections to the hydraulic ram. The pump then only circulates oil at a low pressure, and the ram is hydraulically locked to hold the front wheels in a fixed position. When the steering wheel is moved the Orbitrol valve directs oil to the appropriate side of the ram, and connects the other side of the ram to the reservoir. A rapid build up of pressure then occurs and a pre-determined volume of oil is pumped into the ram to turn the wheels a fixed amount. As the volume of oil passed through the valve is dependant on the amount of steering wheel movement, the front wheels move in direct response to the steering wheel in exactly the same manner as they would if they were connected by mechanical linkage, but all the steering effort is supplied by the pump, the effort at the steering wheel being only sufficient to turn the Orbitrol valve. If for any reason the pump fails to deliver oil pressure the tractor can be steered manually. If this occurs, turning the steering wheel will not only direct oil into the ram cylinder but the metering unit in the Orbitrol valve will act as a pump, so that the front wheels will be steered in the same way as they are when power operated, but the effort required to steer the wheels must be applied through the steering wheel.

Steering Column: The steering column consists of an outer tube and an inner shaft with a bearing at the top next to the steering wheel. The bearing supports the shaft and on non-Q cab tractors can be adjusted to eliminate end float or loading of the shaft. The shaft has splines at the lower end which locate in the Orbitrol valve splines.

Fig. E23-885

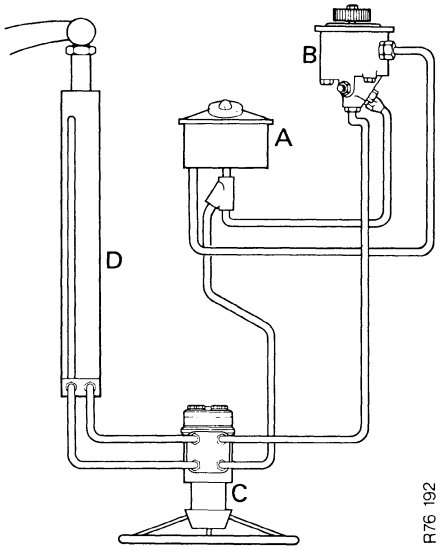

Fig. E24-9 and 12 series

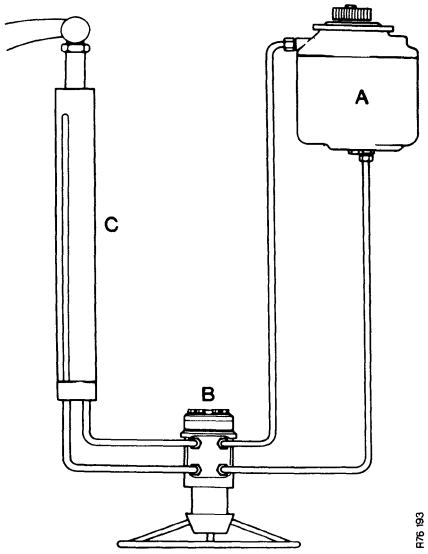

Fig. E25-12 and 14 series

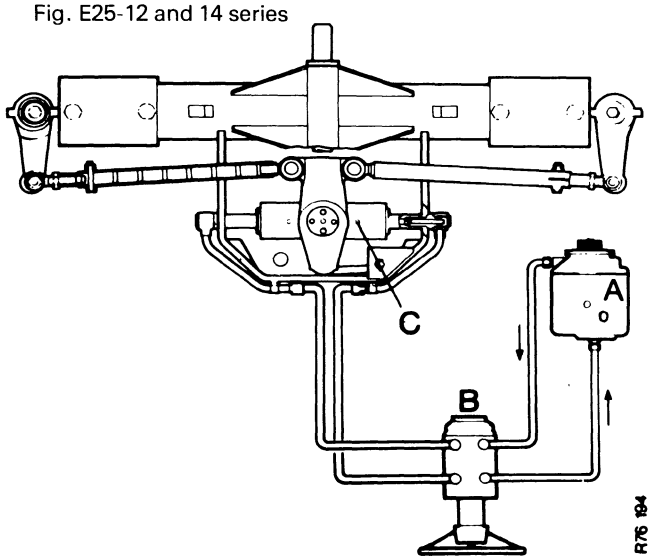

Orbitrol Valve: The Orbitrol valve consists of two units; a rotary valve and a metering valve. The rotary valve consists of an inner sleeve which is connected to the steering column, and an outer sleeve connected to the metering unit. The outer sleeve is free to rotate in the valve body and is connected to the metering unit by a pin which passes through the clearance holes in the inner-sleeve. The two sleeves can therefore, revolve together, but relative movement between the sleeves is limited by the diameter of the clearance holes in the inner-sleeve, and resisted by centering springs which hold the inner-sleeve so that the outer-sleeve pin is in the centre of the clearance holes. When the steering wheel is stationary the centering springs hold the inner-sleeve in a neutral position so that the ports in both sleeves line up to close both ram connections and divert pump output to the reservoir. When the steering wheel is turned, the inner-sleeve overcomes the tension of the centering springs and turns so that the sleeve ports are changed to direct pump output to one side of the ram via the metering unit, and the other side of the ram is connected to the reservoir.

The metering unit consists of an outer stator which has seven lobes, and a rotor which has six lobes. The stationary stator is bolted on the end of the valve body but the inner rotor is free to rotate inside the stator, and is connected to the outer sleeve pin by means of a short shaft. As the rotor has less lobes than the stator it cannot fit centrally in the stator, but must always be disposed off centre so that as it rolls inside the stator it will follow a circular path, and the spaces between the inner and outer lobes will increase and decrease. If oil is fed into the spaces on one side of the rotor it will be pushed round and operate as a hydraulic motor. When the steering wheel is turned the inner sleeve is turned, but initially the outer sleeve remains stationary so that the sleeve ports are lined up to direct pump output to one side of the rotor, and the other side of the rotor is connected to one side of the hydraulic ram. Pump pressure then rises until it is sufficient to turn the rotor and push oil from the outlet side of the rotor into the ram cylinder. As the rotor follows a circular path inside the stator it will also turn - one lobe for each revolution - and in doing so, turn the outer sleeve and change the sleeve ports to shut off the pump output to the rotor and direct it to the reservoir.

Movement of the rotor, and therefore, the volume of oil fed to the hydraulic ram, is entirely dependant on the amount of steering wheel movement. The further the wheel is turned, the further the rotor must revolve to restore the outer sleeve to its neutral position. The front wheels are therefore, turned to exactly follow the

Fig. E26

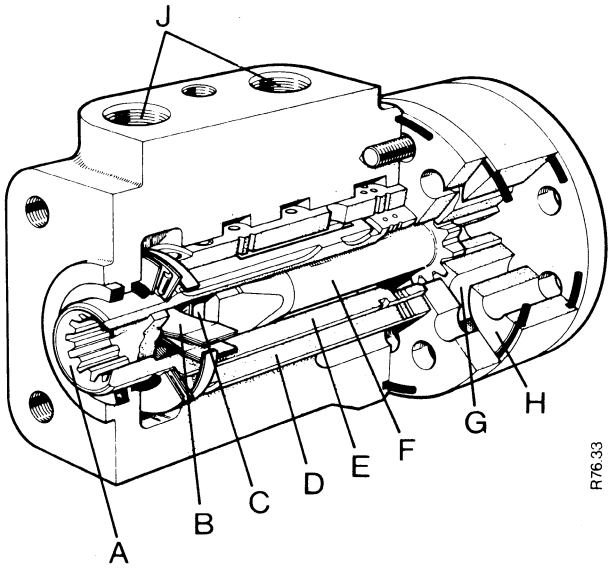

Fig. E26. Orbitrol Valve

A. Column spline
B. Centering spring
C. Drive pin
D. Outer sleeve
E. Inner sleeve
F. Shaft
G. Rotor
H. Stator
J. Pipe connections

Fig. E27

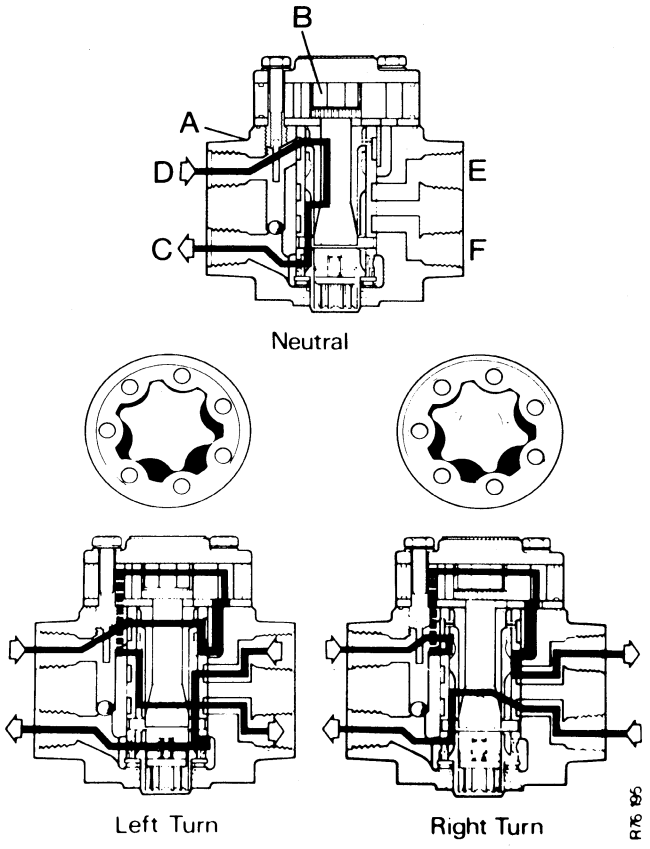

Fig. E27. Oil Flow Through Servo Valve

A. Valve unit
B. Metering unit
C. Return to reservoir
D. Feed from pump
E. Ram connection
F. Ram connection

movement of the steering wheel, but the only effort required to turn the steering wheel is the small effort required to overcome the centering spring tension and displace the two sleeves.

If, for any reason, the pump fails to deliver oil, turning the steering wheel will displace the two sleeves but the rotor, and therefore, the outer sleeve, will not turn. As the relative movement between the two sleeves is limited to eight degrees in either direction, by the diameter of the clearance holes in the inner sleeve, turning the steering wheel more than eight degrees with the pump in-operative will cause the inner sleeve to turn the rotor, via the outer sleeve peg and connecting shaft. When this occurs the operation of the rotor will be changed from that of a motor to a pump. The ball valve in the body will be lifted off its seat so that oil can be drawn into one side of the rotor and then pumped in the normal way to the hydraulic ram. Under these conditions the steering ratio is the same as when operating under power, but the actual effort required to steer the tractor must be applied to the steering wheel.

Hydraulic Pump: The twin rotor pump incorporates pressure balanced bearings. The rotor being supported in bushes which not only provide bearings for the rotor shafts but also seal the rotor side faces against oil leakage. Most of the leakage which takes place in rotor type pumps is through the clearance between the rotor side faces and the shaft bearings. The bearings are therefore, pressure loaded by feeding oil from the outlet side of the pump into the annular space between the bearings and the pump body. These spaces are sealed by 'O' rings, and as the area under pressure in the space is slightly greater than the area under pressure between the rotors, the pressure in the spaces will press the bearings against the rotors. The bearings are therefore, held in close contact with the rotors at all output pressures, and leakage past the rotor side faces reduced to a minimum.

To prevent the system being subjected to excessive oil pressure should the steering wheel be held hard into full steering lock, the pump incorporates a relief valve which allows oil to return direct to the pump reservoir when the pressure reaches 70 kg cm² (1000 lb in²). Return oil from the Orbitrol valve is fed to the centre of the reservoir cover, where it passes through a paper element filter before being returned to the reservoir.

Fig. E28

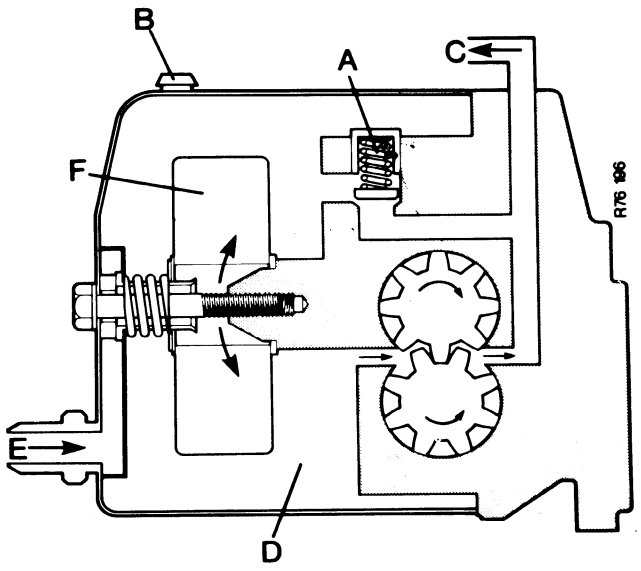

Oil Flow Through Pump

A. Pressure relief valve
B. Vent valve
C. Oil outlet
D. Oil reservoir
E. Oil return
F. Filter element

Hydraulic Ram: 8, 9 and 12 series tractors are fitted with a double-acting ram of unequal displacement which is mounted on the left-hand side of the tractor attached to the left-hand steering lever. As the volume of oil required to fully extend the ram is greater than the volume required to fully retract it, due to the presence of the ram rod in the front end of the cylinder, the number of steering wheel turns into full left-hand steering lock will be greater than those to the right. This does not affect the steering in any way and is not noticeable when driving the tractor.

NOTE: In some territories 12 series tractors are fitted with 14 series (transverse) steering rams.

14 series and some 12 series tractors are fitted with an equal displacement double-acting ram mounted transversely behind the front axle. The ram rod and piston are rigidly mounted and the ram cylinder moves when oil is pumped into the cylinder via the hollow rods. The cylinder swivels in a yoke which has two equal length track rods connecting the ram to the steering levers. The cylinder is protected by a heavy sump plate which is integral with the front axle.

The 1210 4WD Mk II tractor is fitted with an unequal displacement double-acting ram mounted transversely behind the front axle at the left-hand side. It is connected at one end to the left-hand steering lever, and pivots on the axle casing at the other. The cylinder is mounted rigidly at its pivot and the ram piston is moved when oil is pumped into the cylinder.

HYDROSTATIC POWER STEERING

FAULT FINDING

Faulty operation may be experienced if dirt is allowed to enter the system, or if units receive damage due to neglect or abuse. If incorrect operation is experienced, the following checks will enable the fault to be located as quickly as possible.

Heavy Steering: Ensure mechanical faults such as seized King pins or steering joints are not the cause, then check pump pressure. If pump pressure is incorrect check Orbitrol valve and hydraulic ram.

Delayed Steering Action: If front wheels do not steer immediately the wheel is turned more than 2°, this could indicate the presence of air in the system which should be vented.

Erratic Steering Action: Check for mechanical binding, then vent the system. If Orbitrol valve has been disturbed, check for correct assembly of rotor.

Wheels Steer in Wrong Direction: Check ram pipes for correct fitting, i.e. reverse fitting at ram end or Orbitrol then vent the system. If Orbitrol valve has been disturbed, check for correct assembly of rotor.

Steering Wheel Operates as a Motor: This is caused by the Orbitrol valve outer sleeve being unable to centre due to dirt jamming the sleeve. Check also for broken centering springs.

Steering Wheel Creep: When the wheels reach full steering lock the steering wheel also reaches the end of its travel. It will not however, lock solid, as a slight leakage occurs inside the Orbitrol valve and allows the steering wheel to creep. A small amount of creep is therefore normal, but should not exceed 4 rev/min when a torque of 1.6 kg m (12 lb ft) is applied. Creep in excess of this indicates excessive leakage in the Orbitrol valve.

Steering Wander: If wheels do not remain in a set position with the steering wheel stationary, check ram piston seals, if satisfactory check Orbitrol valve for excessive internal leakage.

Complete Loss of Steering: First check the oil level in the reservoir then vent the system. If still not satisfactory of if difficulty is experienced raising sufficient pressure to vent the system, blank off the two ram cylinder pipes and check the amount of slip in the Orbitrol valve.

Steering Rattle: With engine running and an assistant turning the steering wheel half-a-turn in each direction alternately, check for play in ball joints and track rods. Check steering lever bolts and ram anchor bracket bolts for tightness.

HYDROSTATIC POWER STEERED TRACTORS

Front Hubs

Removal and Replacement

Removal and replacement of front hubs is the same as for manually steered tractors. See publication 9-37172 for 1210 4WD Mk II tractors.

Stub Axles

Removal and Replacement

Removal and replacement of stub axles is the same as for manually steered tractors.

Front Axle - Side Mounted Rams

Removal and Replacement

Removal and replacement of front axle is the same as for manually steered tractors, except for the hydraulic steering ram which has to be disconnected at the left-hand steering lever.

Front Axle - Transverse Rams

Removal - Figs E29 and E30

1. Disconnect steering pipes at rear of axle using a suitable container beneath pipe ends.
2. Raise tractor with jack beneath axle and remove front wheels.
3. Place supports under main frame, positioned as far forward as possible but clear of front axle.
4. Cut locking wire, then unscrew trunnion pin locking bolt five full turns. Tap bolt head to push the screwed sleeve clear of trunnion pin, then remove bolt.
5. Pierce welch plug and lever out of front extension.
6. With weight of tractor resting on supports and a jack supporting only the weight of the axle, pull trunnion pin forward, clear of front extension. Front end of trunnion pin has a $\frac{5}{8}$ in UNC tapped hole in the centre to enable a slide hammer with adaptor to be used for withdrawing pin.
7. Lower axle to ground ensuring jack is placed so that axle does not tilt rearwards.

Replacement

8. Fit new 'O' rings on outside of thrust washers, then smear washers with grease and place in axle beam recess.
9. Place axle on jack and raise towards extension. Take care not to damage 'O' rings or displace thrust washers when entering beam into extension. Ensure beam remains level and when it is raised high enough, push a bar into extension to align holes.
10. Fit 'O' ring on trunnion pin, smear pin with grease and push into extension.
11. Turn pin so that chamfered end of bolt hole is towards top then tap pin into position taking care not to damage extraction hole thread.
12. Replace locking bolt, fit screwed sleeve to bolt, then tighten bolt and lock with wire.
13. Reconnect steering pipes, fit new welch plug, then vent the steering system.
14. Grease trunnion pin bearings and refit front wheels.

Fig. E29

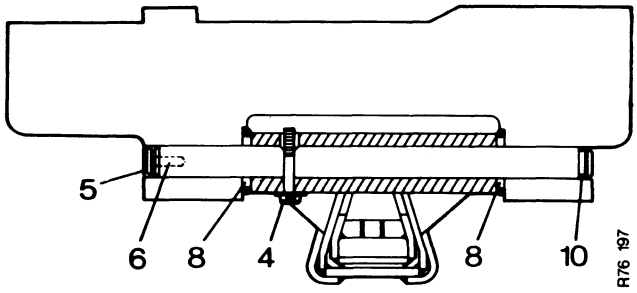

Fig. E30

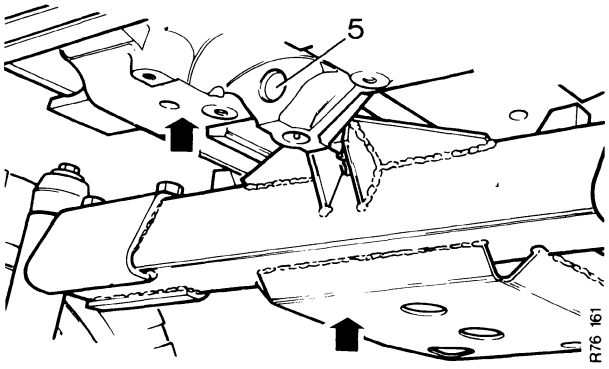

Front Axle - 1210 4WD Mk II

Removal and Replacement

Removal and replacement of front axle is the same as for conventional 12 series tractors except for the driveshaft which has to be disconnected at the differential housing flange.

Steering Column - 'Q' Cab Tractors

Removal — Fig. E31

1. Disconnect battery.
2. Carefully note position of steering hoses and disconnect from steering ram and pump pipes.
3. Remove steering wheel and four screws securing instrument panel to console. Lift instrument panel clear of console and disconnect engine speed indicator cable, fuel gauge lamp lead and wiring harness at the three multi-pin connectors; remove instrument panel.
4. Remove six bolts and washers securing console cover plate, lift plate clear of console then remove connector block assembly from plate; remove cover plate after releasing grommet and cables.
5. Restrain weight of steering column, then remove four bolts and washers securing column to console wall; lower column to rest on transmission casing.
6. Remove the four column mounting bushes (these are secured by grommet type rubber inserts).
7. Turn column a quarter-turn to the left and lift clear of console.

Replacement

8. Tie a 122 cm (48 in) length of cord to each pair of steering hoses.
9. Lower steering column assembly into console using cords to guide and pull steering hoses into correct positions. When column assembly is resting on transmission housing, turn assembly to the right so that Orbitrol valve is facing towards front of tractor.
10. Dismantle each column mounting assembly by pressing the rubber insert complete with inner bush from the outer bush, and then pressing the inner bush from the rubber insert.
11. Refit column mounting assemblies to console wall in the following manner: Fit rubber insert to hole in console wall, lightly oil internal bore of outer sleeve and push over rubber insert. Lightly oil outside of inner bush, and push into rubber insert.
12. Reverse operations 1 to 5.
13. Vent the steering system.

NOTE: If removing the steering column with the cab raised, the steering hoses can be disconnected at the Orbitrol valve and the column lifted out as described above. It is essential that the steering hoses are reconnected to the correct ports, so extreme care should be taken to identify them when disconnecting.

Fig. E31

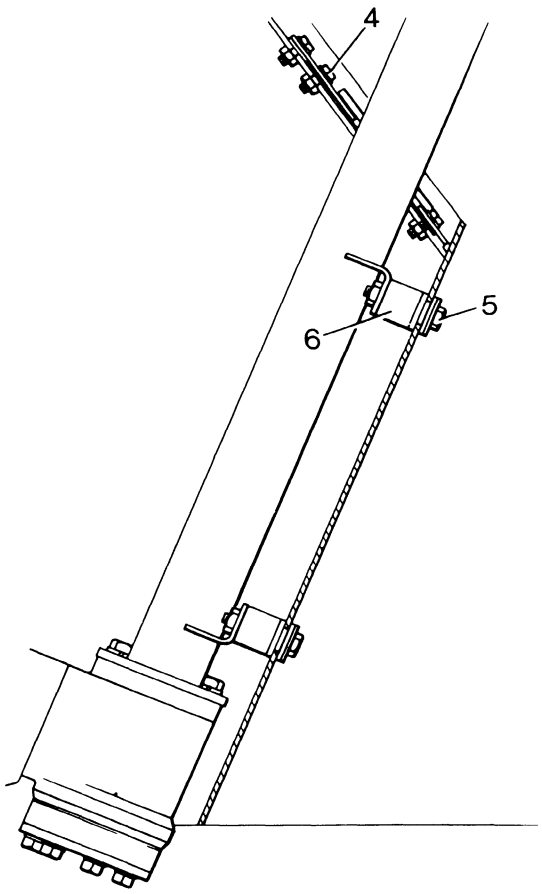

R76 166

Fig. E32

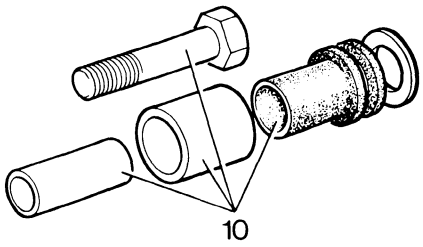

R76 167

Steering Column - Not 'Q' Cab Tractors

Removal — Fig. E33 (showing 885)

1. Carefully note positions of, and disconnect four pipes from Orbitrol valve using a suitable container beneath pipe ends.
2. Remove bolts and washers securing column unit support bracket to gearbox cover.
3. On 12 and 14 series tractors, remove fuel tank mounting bolts and bolt securing fuel tank to steering column. Raise rear of fuel tank.
4. On 9 series tractors, the hand throttle lever passes through the instrument panel and it is necessary to remove the lever from the lower end of the hand lever spindle, then unscrew the nylon nut at the top of the spindle, so that the hand lever can be withdrawn through the instrument panel.
5. Disconnect throttle linkage - 885.
6. Remove complete column assembly and support bracket.

Replacement

7. Reverse operations 1 to 6.
8. Vent the steering system.

Orbitrol Valve

Removal

1. Remove steering column.
2. If still fitted, carefully note positions of, and disconnect steering hoses from Orbitrol valve.
3. Remove four bolts securing Orbitrol valve, and remove valve from column.

Replacement

4. Reverse operations 1 to 3.

Fig. E33

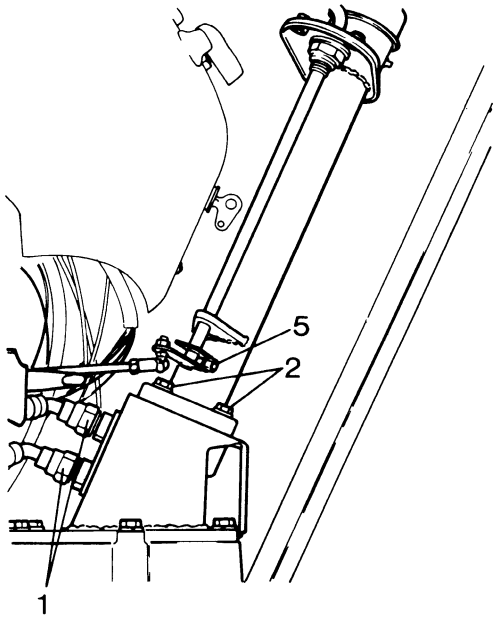

R76 168

Hydraulic Pump - Not 885

Removal — Fig. E34

1. Clean outside of pump and reservoir, then slacken union nut at tank end of fuel feed pipe; this prevents siphoning when pipe is disconnected from fuel feed pump.
2. Disconnect pipes from fuel feed pump and remove securing bolts.
3. Slacken alternator mounting bolts and remove alternator drive belt.
4. Disconnect alternator adjustor strap and swing alternator upwards; tighten mounting bolts to hold alternator in this position.
5. Disconnect feed and return pipes from steering pump then remove the two securing bolts; the upper bolt requires a shortened ½ in AF spanner.
6. Carefully withdraw pump rearwards until clear of timing gear, remove and discard gasket.

Replacement

7. Thoroughly clean carrier plate and fit new gasket to pump.
8. Refit pump to engine and replace securing bolts. Ensure pump fits flat up to carrier plate then tighten bolts evenly.
9. Reverse operations 1 to 5.
10. Fill reservoir with new, clean oil then vent system. Check for oil or fuel leaks then top up reservoir.

Fig. E34

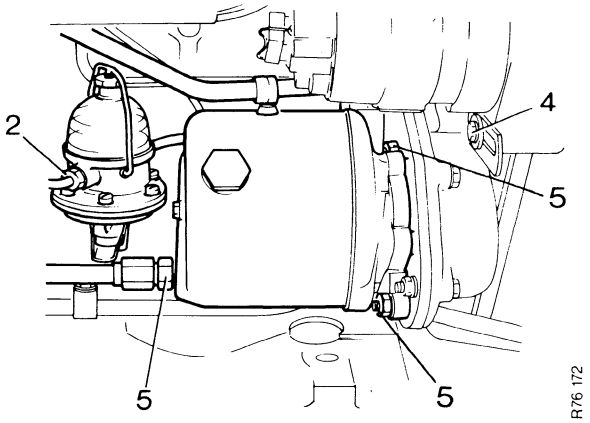

R76 172

Hydraulic Pump - 885

Removal — Fig. E35

1. Place a suitable container beneath pump and disconnect pump inlet and by-pass hoses, and union nut at outlet pipe.
2. Slacken two bolts securing pump bracket to tractor main frame and slide pump downwards to slacken drive belt.
3. Remove drive belt and bolts securing pump bracket to main frame then remove pump and bracket assembly.
4. Reverse operations 1 to 3.
5. If pump has been stripped or a replacement pump has been fitted, clean out reservoir, flush pipes with clean oil and fit new filter element.
6. Fill reservoir with new, clean oil then vent system. Check for oil leaks then top up reservoir.

Fig. E35

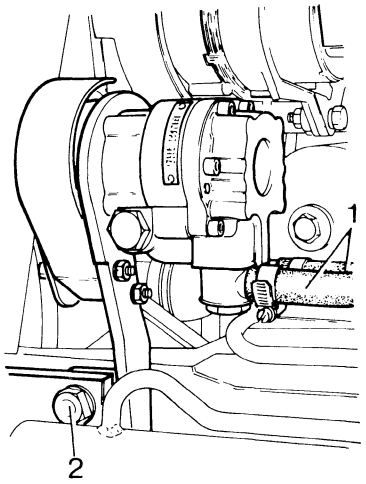

R76 164

Hydraulic Pump Reservoir - 885

Removal — Fig. E36

1. Place a suitable container beneath reservoir and disconnect pump inlet and by-pass hoses at the reservoir.
2. Remove three screws securing reservoir to bracket.
3. Remove reservoir assembly.

Replacement

4. Reverse operations 1 to 3.
5. Fill reservoir with new, clean oil then vent system. Check for oil leaks then top up reservoir.

Fig. E36

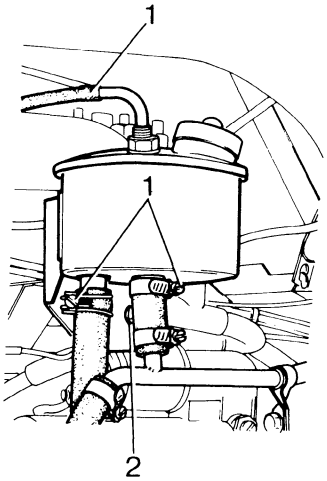

R76 162

Hydraulic Steering Ram - Transverse

Removal — Fig. E37

1. Remove Front axle.
2. Disconnect track rods from steering levers and remove circlips from ram rod connectors.
3. Remove pipes then unscrew connectors from ends of ram rod.
4. Remove split pin, nut and bolt securing pivot beam to axle then lift out the ram and yoke assembly, retrieve distance pieces from each end of ram rod.
5. Remove four screws securing ball pegs.
6. Lever ball pegs from yoke retrieving shims from beneath each peg; separate ram from yoke.

Replacement

7. Thoroughly soak felt ball peg seals in clean engine oil.
8. Refit lower ball peg (with grease fitting), seal and shim, then fit upper ball peg, seal and shim.
9. Check that screws lightly grip the cylinder when fully tightened. If tight, remove shim beneath upper ball peg.
10. Locate ram and yoke assembly on axle, ensuring distance pieces are fitted at each end of ram rod; these are selectively assembled to obtain 0.13 mm (0.005 in) clearance to 0.02 mm (0.001 in) preload before connectors are tightened.
11. Refit pivot beam bolt and two washers then tighten nut to give zero end float to 0.1 mm (0.004 in) preload. Fit split pin.
12. Reverse operations 1 to 3.
13. Centralise steering ram and set wheel alignment.
14. Fill reservoir with clean, new oil and vent the system. Check for oil leaks then top up reservoir.

Hydraulic Steering Ram - Side Mounted

Removal — Figs. E38 and E39

1. Place a suitable container beneath ram then disconnect both pipes.
2. Disconnect both ball joints by first slackening the locknut at the front joint and then turning the ram rod until it is screwed out of the joint. The complete ram can then be turned to unscrew the rear joint.

Replacement

3. Reverse operations 1 and 2.
4. Fill reservoir with clean, new oil and vent the system. Check for oil leaks then top up reservoir.

Fig. E37

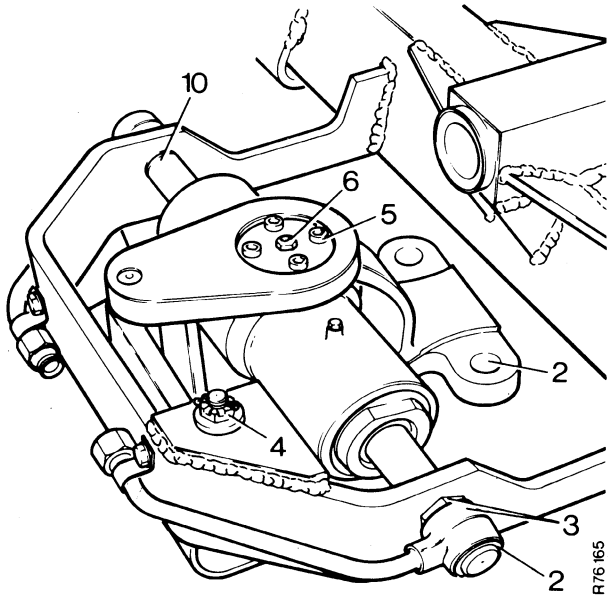

Fig. E38

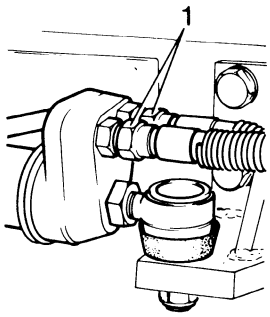

Fig. E39

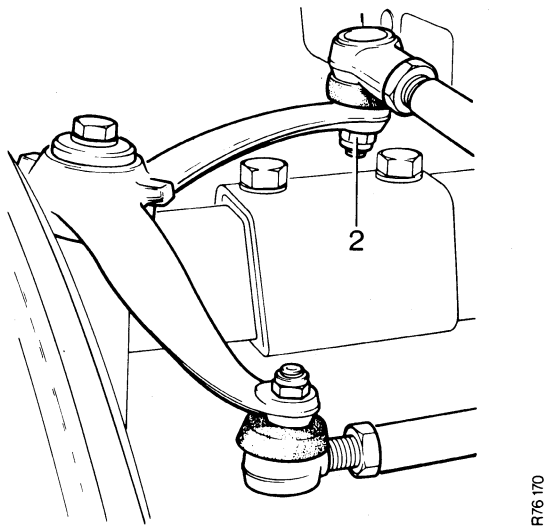

Hydraulic Steering Ram - 1210 Mk II 4WD

Removal — Fig. E40

1. Place a suitable container beneath ram then disconnect both pipes.
2. Remove split pin and nut securing ram cylinder to axle assembly.
3. Remove split pin and nut securing ram rod to left-hand steering lever.
4. Remove steering ram from axle.

Replacement

5. Reverse operations 1 to 4.
6. Fill reservoir with clean, new oil and vent the system. Check for oil leaks then top up reservoir.

Fig. E40

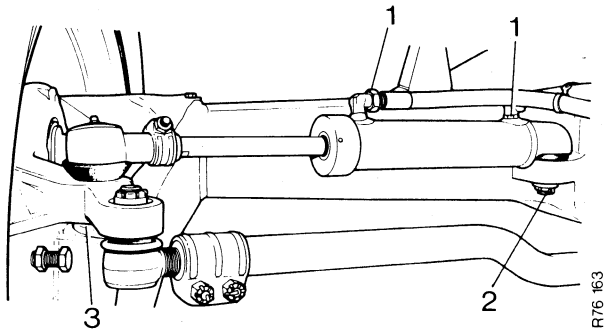

General Maintenance

The pump and valve components operate with very small clearances, it is essential that great care is taken to ensure that dirt and other foreign matter is prevented from entering the system. Whenever the pump or Orbitrol valve is serviced or replaced the reservoir must be cleaned, the filter (if servicing) renewed, and the system flushed with clean, new steering oil.

THE ONLY OIL RECOMMENDED FOR USE IN THE HYDROSTATIC STEERING SYSTEM IS SHELL TELLUS 27.

When carrying out tractor maintenance include the following items:-

1. Lubricate king pins, hubs, steering column (not Q cab tractors), ram yoke (if fitted) and trunnion pin. The yoke and front trunnion pin grease fittings are accessible from underneath the axle. The rear trunnion pin grease fitting has an extension pipe into the front extension.

NOTE: To ensure effective lubrication of the ram yoke (transverse rams), it is essential that SAE 140 oil and **not** grease is used. Pump oil slowly into lubrication point until a small quantity of oil is expelled from the overflow valve.

2. Check the level of oil in the reservoir. This should be to within 10mm (⅜in) of filler rim on 885 tractors, and to the level of the filler hole on all others. Top up with the recommended grade of oil if not to the correct level.

Inspect pipes and connections for oil leakage which should be rectified immediately. Do not use the tractor if there is any sign of leakage: The steering will not operate if the oil level falls so low that the pump draws air.

Renew filter element after first 500 hours (6 months) of operation and then every 1000 hours or 12 months, whichever occurs first, examine track rod joints and renew if play is apparent.

Venting the System - Side Mounted Rams and 1210, Mk II 4WD

1. Top up reservoir with correct grade of oil to within 10 mm (⅜ in) of filler rim on 885 tractors and to level of filler hole on all others. Replace filler cap.
2. Raise front of tractor so that wheels are clear of the ground.
3. 885 only: With fuel cut-off control in the Stop position, use the starter to turn the engine over for 10 - 15 seconds (to prime the pump) then check the reservoir level.
4. All tractors: Start engine and run at idling speed. Turn steering wheel one full turn in each direction several times but do not allow the front wheels to reach full steering lock.
5. Check reservoir oil level, then with engine running at idling speed, turn the steering wheel so that full steering lock is reached several times in each direction. Do not hold the wheels against the steering stops for more than a few seconds at a time.
6. Lower front wheels to the ground, check oil level then drive tractor at slow speed in a figure-of-eight to check steering action. Steering should operate smoothly and without hesitation.

Venting the System - Transverse Rams

1. Top up reservoir with correct grade of oil to level of filler hole.
2. Raise front of tractor so that wheels are clear of the ground, then start engine and run at idling speed.
3. Open vent valve in left-hand side of steering cylinder one full turn, then turn steering wheel to right and allow front wheels to reach full right-hand steering lock. Close left-hand valve then open right-hand valve one full turn and turn steering wheel to left. Allow front wheels to reach full left-hand steering lock then close valve.
4. Turn steering wheel from lock-to-lock several times to check correct operation, then stop engine, lower front wheels to ground and check oil level.

Track Rod Joints - Transverse Rams

The track rod ball joints are fitted into taper holes in the steering levers and yoke. It is essential to rigidly support the lever or yoke before attempting to remove the joint. This should be done with a sharp blow from a soft faced hammer.

When replacing the track rod inner joints, clean the threads then smear them with Loctite (Grade 270) before screwing joint in, until centre of joint is 33.34 mm (1.5/16 in) from end of track rod tube. The joints should not then be disturbed; adjustments being made at the outer joints which are secured with locknuts.

Front Wheel Alignment - Side Mounted Rams and 1210 Mk II 4WD

Front wheel alignment is the same as for manually steered tractors.

Front Wheel Alignment - Transverse Rams — Fig. E41

Front wheels should have 3.2 mm (0.125 in) toe-in when in the straight ahead position. This setting is determined by the length of the track rod and should be checked by measuring the distance between the wheel rims at points level with the wheel centres and parallel to centre line of the front axle. Adjust wheel alignment as follows:

1. Remove both track rod clamp bolts.
2. Slacken both ball joint locknuts.
3. Screw both track rods an equal number of turns in, or out as required.

NOTE: If track rods are not turned equally the ram cylinder will not remain central.

4. Re-fit both clamp bolts and tighten ball joint locknuts.

Fig. E41

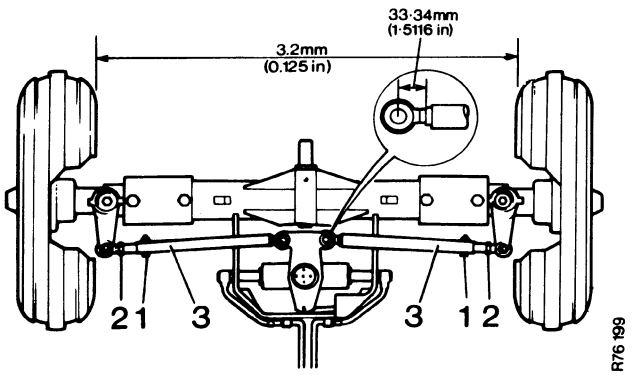

Hydraulic Ram Cylinder

Centralising — Fig. E41

If the track rods are disturbed the ram cylinder should be centralised as follows:

1. Remove track rod clamp bolts from both sides and release both ball joint lock nuts. Raise front wheels clear of the ground.
2. Turn steering wheel to left until steering ram reaches end of its travel.
3. Swing right-hand wheel into full left-hand steering lock, and with wheel held against its stop and ram at its full right-hand stroke, screw track rod in, or out of ball joint until bolt hole in tube is opposite the correct hole in track rod; do not fit clamp bolt at this stage.

4. Turn steering wheel to right until steering ram reaches end of its travel, then swing left-hand wheel into full right-hand lock and set length of left-hand rod as described above.
5. Fit both track rod clamp bolts, turn wheels into straight ahead position and measure wheel alignment. Set the wheels to 3.2 mm (0.125 in) toe-in when measured at wheel rims, by removing both clamp bolts and screwing both track rods an equal number of turns in, or out of the ball joints. If both track rods are not adjusted equally, the ram will not remain central and full steering lock may not be obtainable.
6. When wheel alignment is correct, fully tighten clamp bolts and ball joint lock nuts.

Steering Column Bearing - Not Q Cab Tractors

Adjustment:

Preloading the column bearing will cause heavy operation of hydrostatic steering. The play should be maintained between 0 and 0.076 mm (0 and 0.003 in).

1. Screw down the adjustable cone bearing until it just contacts the balls, then unscrew $\frac{1}{8}$th of a turn.
2. Hold in this position and tighten locknut to 16.6 kg m (120 lb ft).

NOTE: The locknut has a recess on one side which must be fitted against the bearing cone, no tab-washer is required.

Steering Column Bearing - Q Cab Tractors

Adjustment:

No adjustment is required for this bearing except that the steering wheel nut should be tightened as far as possible whilst steering wheel is held.

Steering Column Bearing - Not Q Cab Tractors

Dismantling: Fig. E42

1. Remove steering column and Orbitrol valve.
2. Remove domed nut and washer then withdraw steering wheel using a three-jawed extractor.
3. Remove dirt excluder and locknut.
4. With shaft vertical (to prevent balls falling into tube) unscrew bearing cone and carefully pull shaft upwards to push balls out of tube. Do not pull shaft too far out of tube as this will displace the oil baffle.

Re-assembly:

5. Smear steel balls with grease and fit them into tube groove.
6. Screw bearing cone on to shaft until it contacts balls then fit locknut, recessed side of nut against cone.
7. Adjust bearing free play.
8. Fit dirt excluder and replace steering wheel. Secure with flat washer and domed nut and tighten to 2.76 kg m (20 lb ft).
9. Lubricate bearing through grease fitting.

Fig. E42

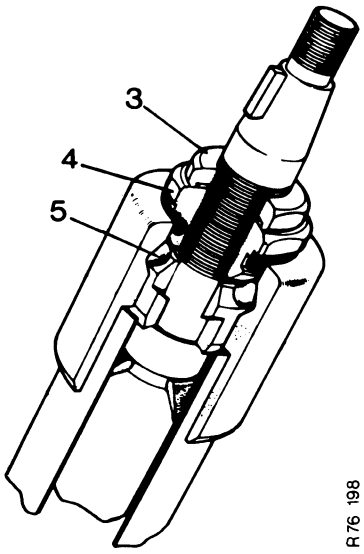

R 76 198

Steering Column Bearing - Q Cab Tractors

Dismantling: Fig. E43

1. Remove steering column and Orbitrol valve.
2. Remove felt washer and spacer.
3. Remove circlip, then using a soft faced hammer gently tap splined end of shaft until bearing is clear of tube.
4. Withdraw bearing using a suitable extractor.

Re-assembly:

5. Reverse operations 1 to 4.

Fig. E43

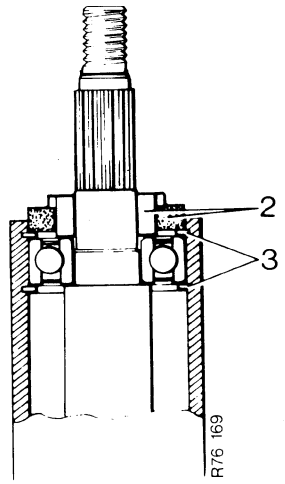

Hydraulic Steering Pump - 885

Dismantling: Figs. E44, E45 and E46

1. Thoroughly clean outside of pump and scribe marks on the pump cover, body and flange, or bracket to assist re-assembly.
2. Clamp pump body in a vice and withdraw pulley; this is on a parallel shaft and not very tight, remove key.
3. Remove four screws securing bearing retainer and bracket to pump body. Remove bearing (if necessary) and oil seal.
4. Lay pump, drive end downwards on bench, and remove six screws securing cover to body.
5. Withdraw cover vertically ensuring rollers do not fall out. The carrier is not tight on the shaft and should remain in the body, but if withdrawn with cover, remove it from the shaft and extract key.
6. Turn body over, and allow carrier and rollers to fall out, then remove cam ring and locking peg. Remove shaft by gently tapping forwards out of body with a soft faced hammer.
7. Wash all parts in paraffin and place in clean container. Handle components with care and ensure no foreign matter is allowed to enter pump during assembly.

Inspection:

8. Examine pump body and cover for signs of wear, renew either if faces or bushes are worn.
9. Inspect cam, carrier and rollers for wear or scoring, paying particular attention to roller ends. These components can not be replaced individually, a new assembly being required if cam, carrier, or any of the rollers are worn.
10. Fit cam locking peg in hole on body pocket and fit cam. Ensure cam seats on pocket face and that slot in cam locates on locking peg.
11. Fit carrier in cam ring, carrier must be fitted so that larger angle 'a' is toward direction of rotation; replace rollers (Fig. E44).
12. Place a straight-edge across the body face and check end clearance of carrier and rollers (Fig. E45). If end clearance exceeds 0.05 mm (0.002 in), a new cam, carrier and roller assembly is required.
13. Examine shaft and bearing. If bearing shows signs of roughness, or if excessive grease has seeped out, it should be renewed.
14. Unscrew flow control valve cap and remove valve spool and spring from body.
15. Check flow control valve spring. This should have a tension of 3.5 to 4.0 kg (8 to 9 lbs) when compressed to a length of 20.8 mm (0.82 in). Renew spring if outside these limits.

Fig. E44

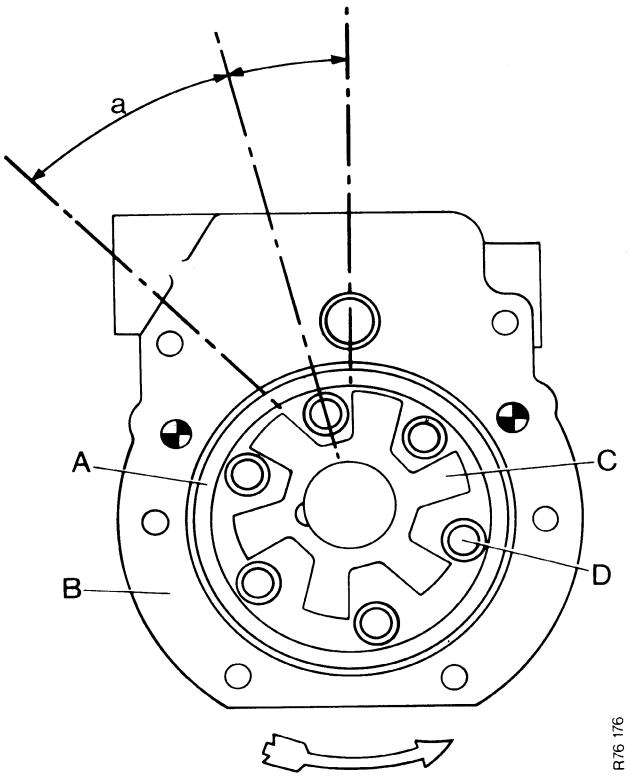

A. Cam *B. Body*
C. Carrier *D. Roller*

Re-assembly:

16. Press new oil seal into pump body; ensuring that seal lip is not damaged and is facing towards inside of body.
17. Fit new bearing (if required) to shaft, smear inside of oil seal with grease and insert shaft and bearing into pump body, ensuring there are no sharp edges on shaft which could cut oil seal.
18. Fit cam locking peg in hole on body pocket and fit cam. Ensure cam seats on pocket face and that slot in cam locates on locking peg.
19. Fit carrier in cam ring, carrier must be fitted as described in operation 11, replace rollers.
20. Fit carrier key in shaft keyway and fit new 'O' rings in cover face.
21. Smear shaft with clean oil then insert it into carrier ensuring that key is not dislodged and 'O' rings not displaced.
22. When body and cover faces are together, secure with six screws and tighten by diagonal selection to 2.5 kg m (18 lb ft).
23. Refit support bracket and bearing retainer and secure with four screws.
24. Replace pulley drive key then replace pulley, secure with retaining bolt and tighten to 2.7 kg m (20 lb ft).

If pump is not to be fitted to a tractor immediately, seal ports with adhesive tape to prevent ingress of foreign matter during storage.

Hobourn Eaton Roller Pump - 885 only

A. Driveshaft
B. Bearing
C. Oilseal
D. Roller
E. Cam
F. Carrier
G. Body
H. Control valve spool
J. Outlet connection
K. Inlet connection

Flow Control Valve - 885

Dismantling: Fig. E47

1. Unscrew valve cap and withdraw valve spool and spring from pump body.
2. If faulty relief valve operation is suspected, fit a new spool assembly, ensuring that the valve in the new spool is set to the correct pressure.
3. If spool is not quite free in body bore, carefully lap in with metal polish then thoroughly clean body and valve to remove all trace of polish.

NOTE: Do not attempt to dismantle spool valve, the pressure relief valve inside the spool is non-adjustable and should not be disturbed.

4. Check operation of valve spring.

Replacement:

5. Place spring and valve spool in pump body bore and replace valve cap.

Fig. E45

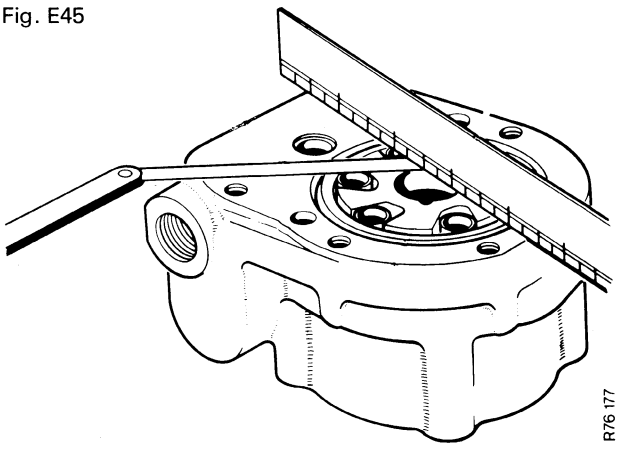

Fig. E46

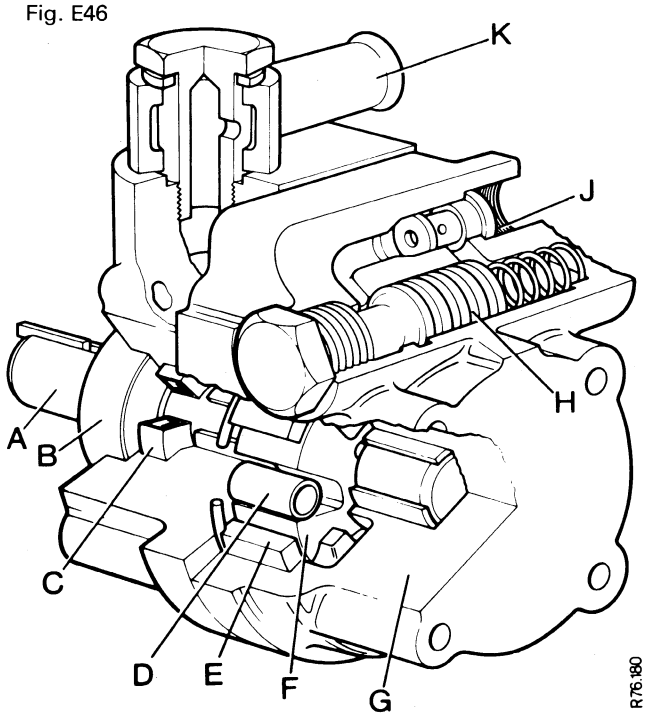

Fig. E47

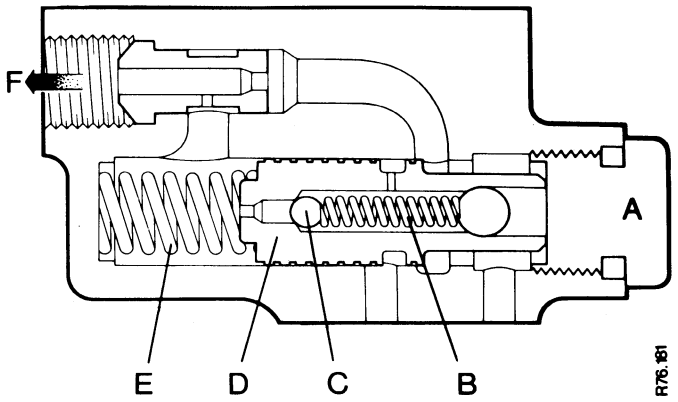

A. Valve cap
B. Spring (relief)
C. Ball (relief valve)
D. Valve spool
E. Spring (flow control)
F. Outlet connection

Hydraulic Steering Pump - Not 885

Dismantling — Figs. E48, E49 and E50

1. Remove pump.
2. Release bolt in centre of reservoir cover, remove cover and element; hold pump over a suitable container when removing cover as the reservoir contents will be released.
3. Release tab washer then remove shaft nut.
4. Remove drive gear from shaft taper using a suitable extractor. Do not attempt to remove gear by hammering shaft end as this may cause rotor teeth to damage the faces of the soft alloy bearings.
5. Remove key from drive shaft and remove four body bolts.
6. Carefully separate mounting flange, and cover from pump body. If body dowels are tight, lightly tap cover with a soft faced hammer.
7. Withdraw rotors and bearings from pump body. Carefully note position of bearings and lightly mark the top of each bearing to enable them to be re-assembled in their original positions.
8. Remove circlip from mounting flange, place flange downwards on suitable supports and tap seal out with a hammer and drift.
9. Remove relief valve plug and spring, carefully noting number of shims fitted under spring. Invert cover and tap it gently on a piece of wood to extract relief valve plunger.

Fig. E48

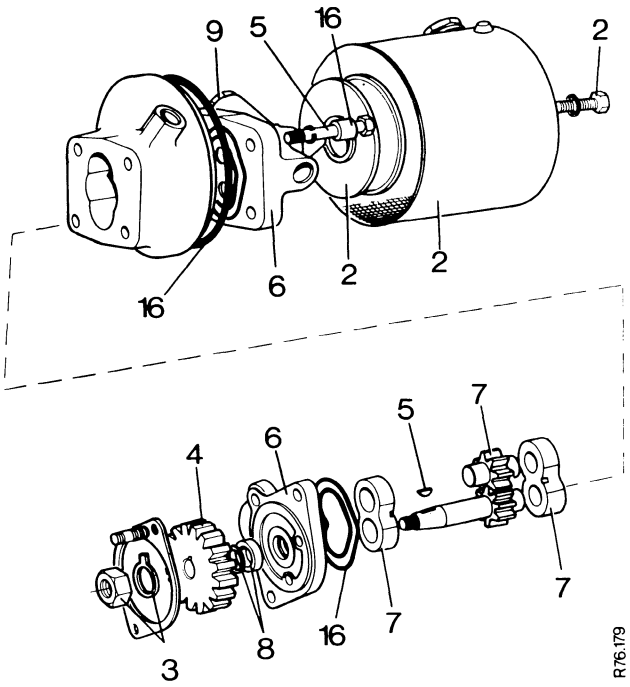

Inspection

10. Thoroughly clean all parts in paraffin and place on a clean bench. Inspect pump body for external damage or cracks and the rotor bores for wear. It is normal for rotors to cut a light track on the inlet side of body, and, if track is not excessively scored, or does not exceed 0.10 mm (0.004 in) at its deepest point, the body is serviceable, and only requires any burrs on edge of gear track to be removed with a very fine abrasive cloth lubricated with paraffin. The body must then be thoroughly flushed clean. If maximum depth of tracks is more than 0.10 mm (0.004 in), pump should be scrapped as a new body, rotors and bearings are required.
11. Examine each bearing for wear in the bores and on the face. Pay particular attention to the condition of lubricating scrolls and the portion of the bearing face between the bores. This portion is known as the seal bridge, any score marks or damage across the bridge can cause high leakage losses. If bearings are worn or scored on the face they may be renewed, but new bearings must not be fitted if body is worn as this would lift the rotors away from the inlet side of the pump body allowing excessive oil leakage between the tips of the rotor teeth and the body.
12. Inspect rotors for worn or scored side faces and journals, and for damage or surface cracks on the teeth. Check also that the thread is not damaged or the keyway worn. Slight wear or scoring of journals can be erased by polishing between lathe centres using 'O' grade emery paper lubricated with paraffin. If bearings are being renewed because of side face scoring, side faces of rotor can be polished by sandwiching a piece of 'O' grade emery paper between the rotor face, and the unworn side of the discarded bearing. As rotors must be selected so that

Fig. E49

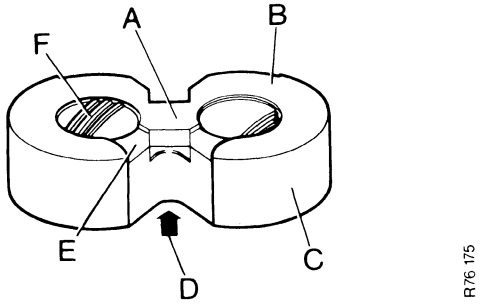

A. Seal bridge
B. Relieved radius
C. Plain face
D. Oil inlet
E. Recess on rotorside
F. Lubrication scrolls

teeth widths are equal within 0.005 mm (0.002 in), and the journal diameters equal within 0.013 mm (0.005 in), rotors must not be renewed singly, but always in a matched pair.

13. Measure the overall length of the rotor and bearing assembly and compare this with the length of the pump body. If the difference is not within 0.20 mm (0.008 in), the bearing 'O' rings will be unable to maintain pump balancing pressure and the pump may not be able to reach the full output pressure, Fig. E50.

Re-assembly

Carry out all operations on a clean work bench and ensure that all components are clean and dry. Handle components with care as any burrs or bruise marks on machined surfaces will render them unserviceable.

14. Refit relief valve plunger, shims, spring, bonded seal and cap.
15. Place pump flange with machined face downwards on a clean, flat surface. Apply a small amount of grease to the oil seal then press seal in position. Do not fit seal with a hammer and punch, use a 28.8 mm (1.0937 in) diameter tool; replace circlip.
16. Fit new sealing rings into mounting flange and pump cover recesses. Place pump cover over dowels on pump body ensuring that point of sealing ring is toward inlet port on body.
17. Place pump body on bench, cover downwards and inlet port toward you. Lightly oil bearing bores and faces then fit cover-end bearing into body; ensure that recessed face is uppermost and that the relieved radii on outside diameters is towards the outlet side of pump body. If original bearings are being refitted check that they are assembled in their original positions.
18. Fit rotors in position - driving rotor to the right. Replace top bearing; recessed face toward rotors, and relieved radii toward outlet side of pump body.
19. Smear inside of oil seal with grease then fit flange in position. To avoid shaft keyway cutting the seal edge, cover keyway with adhesive tape.
20. Turn assembly over and place on two wooden blocks so that driveshaft is clear of bench. Fit cover to pump body, positioned so that relief valve cap is toward inlet port side of pump, secure with four bolts and tighten evenly to 4.0 kg m (30 lb ft).
21. Fit drive key to shaft keyway, replace gear, tabwasher and nut. Do not hammer gear onto shaft as this may cause rotor teeth to damage the face of the soft alloy bearings, but hold gear stationary and tighten nut to 6.22 kg m (45 lb ft), lock nut with tabwasher.
22. Replace filter element and reservoir cover.

If pump is not to be fitted to a tractor immediately, seal ports with adhesive tape to prevent ingress of foreign matter during storage.

Filter Element - 885

Replacing — Fig. E51

1. Remove reservoir assembly.
2. Remove retaining bolt from centre of reservoir cover, lift off cover and remove spring and filter cap.

Fig. E50

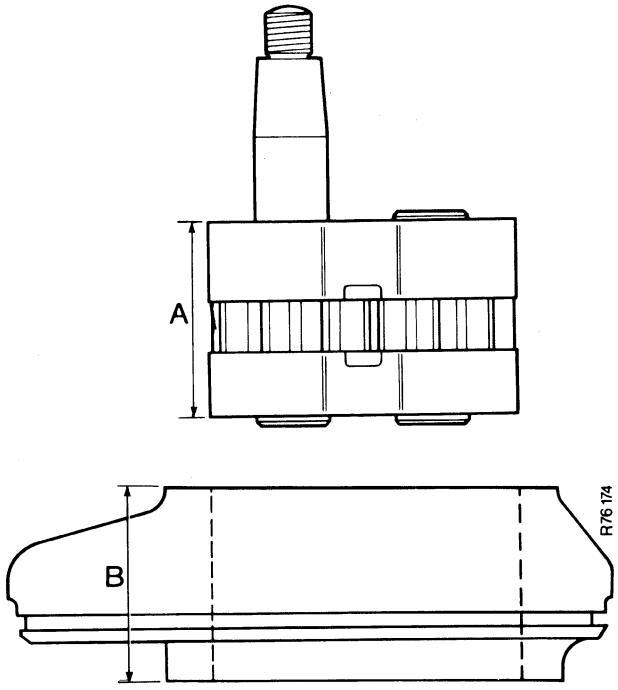

BODY AND ROTOR PACK DIMENSIONS
Dimension 'A' to be within 0.20 mm (0.008 in) of dimension 'B'.

Fig. E51

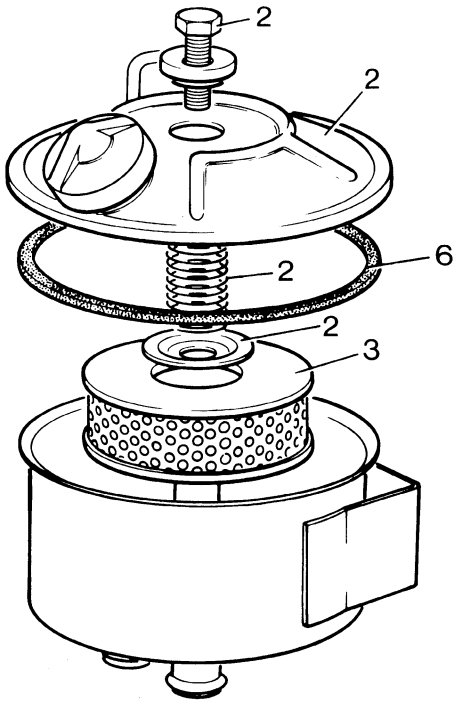

3. Lift out separator then remove and discard filter element.
4. Wash separator and inside of reservoir with paraffin and leave to drain.
5. Fit new filter element and replace separator, filter cap and spring.
6. Fit new sealing ring to reservoir cover, fit cover and replace retaining bolt. Position cover so that filler cap aperture is opposite to mounting bracket, then tighten bolt to 5.5 kg m (41 lb ft).
7. Refit reservoir assembly.

Filter Element - Not 885

Replacing — Fig. 52

1. Remove steering pump.
2. Release bolt in centre of reservoir cover, remove cover and discard filter element; hold pump over a suitable container when removing cover as the reservoir contents will be released.
3. Hold pump with gear downwards then fit new filter element on locating pad on pump cover.
4. Note position of locating plate on inside of reservoir, then push reservoir on to pump so that locating plate engages on pump locating peg.
5. Hold reservoir against element spring and replace centre bolt. Do not overtighten bolt as this will damage sealing washer and cause leakage. Whilst holding cover, screw bolt up to washer then tighten a further three-quarters to one turn only.
6. Refit steering pump.

Fig. E52

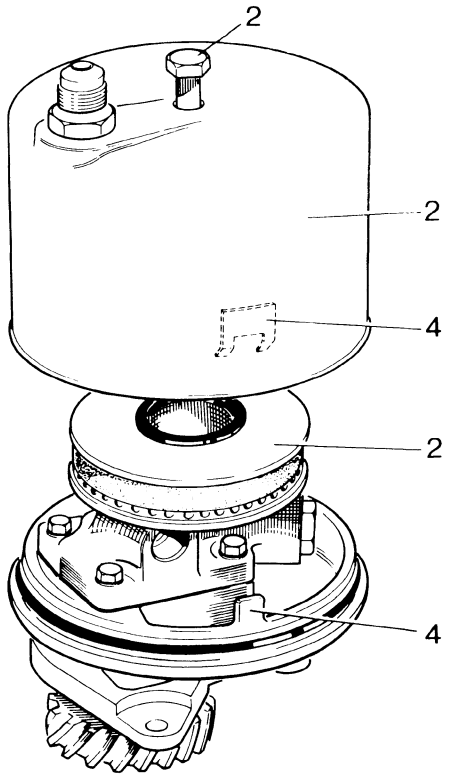

R76 173

Orbitrol Steering Valve

Servicing

On no account should the Orbitrol valve be dismantled during the warranty period, to do so will render the warranty invalid. Servicing after this period should be confined to the replacing of seals, and the cleaning of parts only, as the components are match fitted. The unit is manufactured to extremely close tolerances, therefore absolute cleanliness is essential.

Dismantling — Figs. E53 and E54.

1. Remove seven socket screws from end cap, note position of screw fitted with roll pin. Remove and discard sealing washers from beneath screws.
2. Remove end cap, orbit set, spacer and valve plate; remove and discard 'O' rings.
3. Remove drive shaft; note position of and remove threaded bush and steel ball.
4. Push out valve spool and sleeve. If difficulty is experienced check for scoring of sleeve.
5. Remove washer, bearing, bearing race and centering spring retaining ring from valve spool and sleeve. Note sequence of removal to facilitate reassembly.
6. Remove drive pin then separate valve spool from sleeve by pushing spool in direction of centering springs.
7. Remove six centering springs from valve spool. Discard all six if one or more are broken or damaged.
8. Carefully remove valve spool shaft seal, then remove and discard 'O' ring and 'Ken-ring' seal from valve body.

Fig. E53

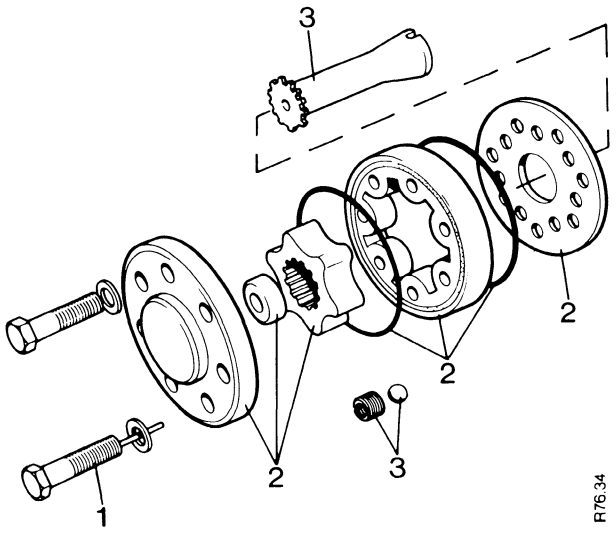

R76.34

9. Thoroughly clean all components using clean fuel and lint free cloth. Examine all parts for damage or wear. If spool valve is found to be scored to a small degree, it can be polished out using lapping compound. However it should be remembered that unnecessary polishing will increase the tolerances of the mating parts and create other problems such as excessive steering wheel slip.

Re-assembly — Figs. E55 to E58

10. Lubricate all parts with steering oil then assemble valve spool and sleeve with centering spring slots aligned. The fit between these parts is very close, so perfect alignment is required during assembly.
11. Insert Special Tool K964173 into centering spring slot in spool valve and sleeve and position springs into protruding end of tool. Using finger pressure compress ends of springs, then slide springs into valve spool and sleeve as special tool is pushed out, until springs have equal protrusion at both sides.
12. Replace drive pin which should be flush with sleeve.
13. Refit ring, bearing race, bearing and washer onto spool valve shaft. Internal diameter chamfer on bearing race must face away from bearing.
14. Using a suitable driver, refit valve spool shaft seal with lip to the outside.
15. Refit 'O' ring and 'Ken-ring' seal to the valve body. This should be done by coating the 'O' ring with grease and then mounting it on outside of 'Ken-ring' seal. Position both on spindle of Special Tool K964172 then push spindle into sleeve of Special Tool until firm resistance is met.
16. Insert tool into Orbitrol valve housing until sleeve bottoms in housing. Press tool with a rotating motion until 'O' ring seats in housing then remove tool.
17. Insert valve spool and sleeve complete with bearing assembly into housing, perfect alignment is necessary because of close fitting of parts. Rotate assembly whilst passing through 'Ken-ring' seal and ensure drive pin is at right-angles to machined surface where hoses attach, this is necessary for timing rotor.

NOTE: If valve spool and sleeve are chilled in a refrigerator, mounting the assembly into housing is easier.

18. Refit non-return valve steel ball into correct port in Orbitrol valve housing, then screw in the threaded bush, do not overtighten bush.
19. Fit new housing 'O' ring.
20. Refit drive shaft ensuring drive slot is at right-angles to connecting flange for steering hoses. Ensure that drive pin is in position to accept slot in driveshaft. It may be necessary to rotate valve spool and sleeve to obtain engagement of slot and drive pin.
21. Refit valve plate so that ports line up with corresponding ports in Orbitrol housing: Position drive shaft so that splines rest on valve plate.
22. Fit two new 'O' rings, one each side of orbit set.
23. Refit orbit set to valve plate, engaging drive shaft splines so that one valley of rotor lines up with drive pin slot in drive shaft. This times the rotor section to the spool valve. If set incorrectly, tractor will steer in opposite direction to that of the steering wheel. When installed, turn outer ring of orbit set until seven bolt holes are aligned.

Fig. E54

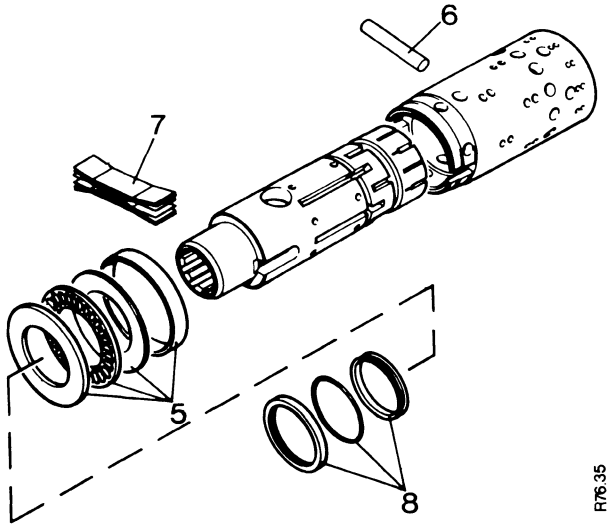

Fig. E55

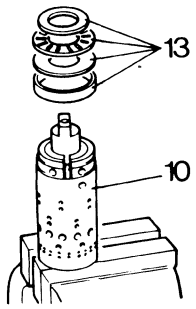

Fig. E56

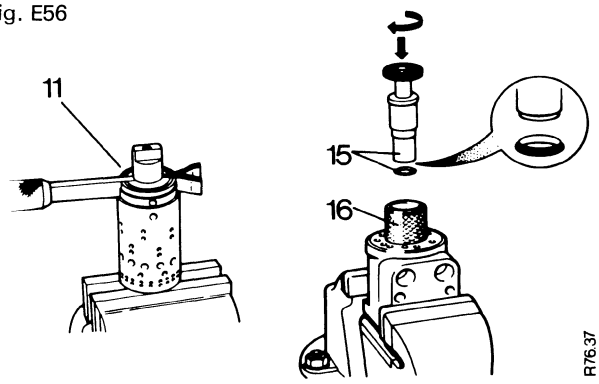

Fig. E57

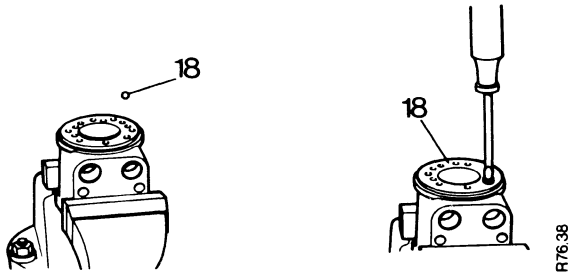

24. Refit spacer on top of drive shaft to retain shaft correctly in orbit set.
25. Refit end cap with holes aligned, fit new sealing rings to screws and secure end cap ensuring correct location of screw fitted with roll pin. Tighten screws to 2.76 kg m (20 lb ft).
26. Test Orbitrol valve by applying a torque to the splined sleeve. This torque must not exceed 2.48 kg m (18 lb ft).

Fig. E58

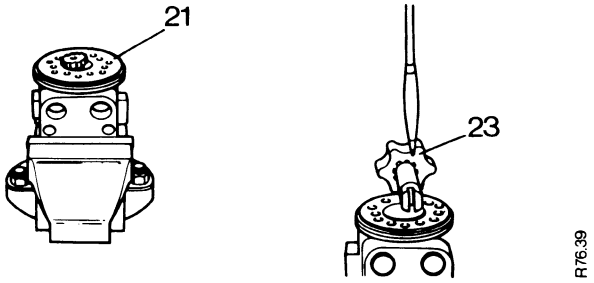

Steering Ram - Side Mounted

Dismantling — Fig. E59

1. Remove steering ram.
2. Drain oil by holding ram with pipe connections downwards and moving ram rod over its full stroke, remove scraper seal.
3. Remove two circlips from inside front end of outer tube then withdraw ram rod complete with sleeve and piston.
4. Hold ram rod in a soft jawed vice by gripping sleeve, do not grip ram rod - then remove piston nut, piston and sleeve.
5. Remove and discard 'O' ring and back-up washers from piston.
6. Remove and discard internal 'O' ring, anti-extrusion ring and 'Nu-Lip' ring, and external 'O' ring and anti-extrusion ring from sleeve.

Fig. E59

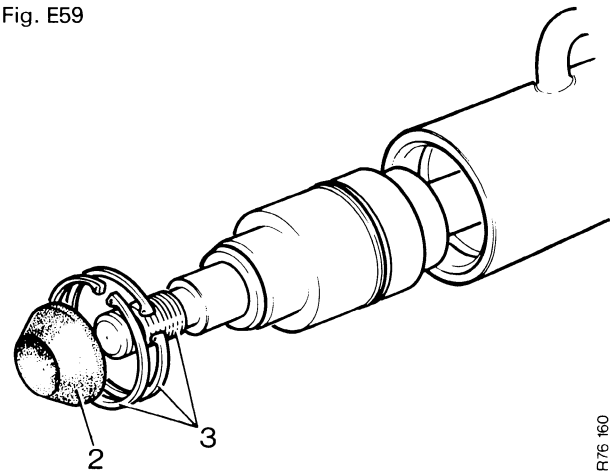

Inspection

7. Clean and examine cylinder case and ram rod, these must be smooth and free from score marks.
8. If the piston or ram rod have any sharp edges, these should be carefully removed with a stone then thoroughly cleaned.

Re-assembly — Figs. E60 and E61

9. Fit new 'Nu-Lip' ring to front internal groove on sleeve, then fit two new leather anti-extrusion rings to remaining internal groove, and external groove, with hairgrain side towards piston end of cylinder. Fit new 'O' rings against hairgrain sides of anti-extrusion rings.

NOTE: Leather anti-extrusion rings should be soaked in light engine oil for 30 minutes prior to fitting. A further 30 minutes should be allowed for drying before completing assembly.

10. Fit new 'O' ring and back-up washers to piston groove.
11. Smear the ram rod with clean oil then fit it through scraper seal and sleeve.
12. Place piston on ram rod, chamfered end of hole against rod shoulder. Replace piston nut and tighten to 13.8 kg m (100 lb ft). Grip sleeve when tightening nut; do not grip ram rod in vice.
13. Smear inside of cylinder case with oil then carefully push ram rod, piston and sleeve into position. Sleeve should be pushed in until tapered shoulder seats in case recess.
14. Fit two circlips ensuring correct seating in groove and that their ends are diametrically opposite.

Fig. E60

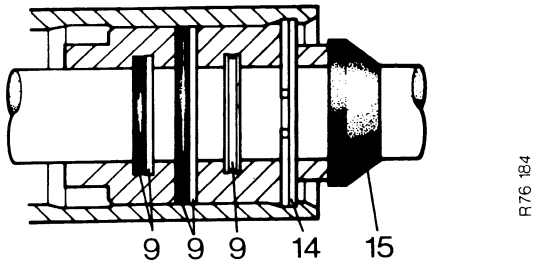

Fig. E61

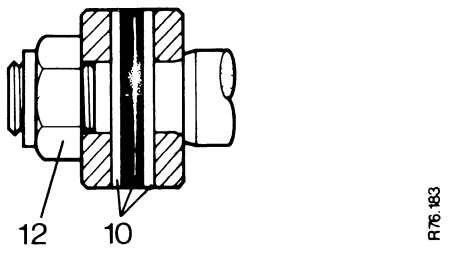

15. Locate scraper seal in case recess.
16. Refit steering ram.

If steering ram is not to be fitted to a tractor immediately, plug pipe connections to prevent the ingress of foreign matter during storage.

Ram Ball Joints - Side Mounted Rams

Replacing

The ball joints at each end of the ram are self-adjusting and do not require lubrication. If a joint develops wear, or becomes seized due to the ingress of water, the joint should be renewed. When replacing joints, screw the front joint into the full depth of thread in the ram rod sleeve then tighten the locknut. Screw the rear joint into the case until the centre-to-centre distance between the joints is 68.6 cm (27.0 in) when ram is fully retracted, then tighten locknut.

Steering ram - Transverse Rams

Dismantling — Figs. E62 and E63

1. Remove ram from yoke assembly.
2. Drain oil from ram by pumping ram rod over its full stroke.
3. Hold ram vertically in a soft jawed vice, compress circlip and tap ram rod upwards. If circlip is held centrally in cylinder, it will clear groove and allow sleeve to be pushed out of cylinder case.

NOTE: Do not grip ram rod in vice.

4. Invert cylinder and remove opposite end sleeve in same manner.
5. Thoroughly clean and examine case and ram rod, which should be smooth and free from score marks. Remove and discard all seals and 'O' rings.
6. If removing piston; remove six socket screws and clamping plate, withdraw piston from ram rod over reduced diameter end.
7. Remove and discard 'O' ring from groove inside piston and retrieve split ring halves.

Figs. E62

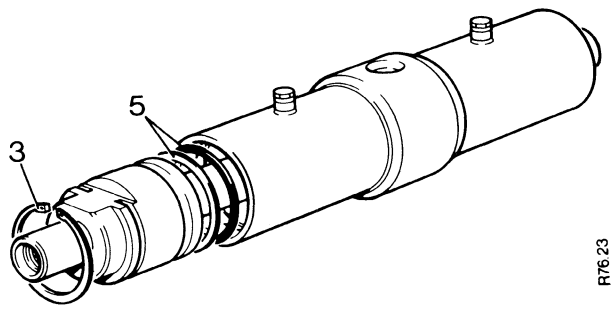

Re-assembly — Figs. E64 and E65

8. Fit new 'O' ring to groove inside piston.
9. Locate piston to ram rod: piston must pass over reduced diameter end of rod to prevent damage to 'O' ring.
10. Refit split ring halves to groove and secure piston with clamping plate and six socket screws. Screws should be smeared with Loctite 270 and tightened to a torque of 1.1 kg m (8 lb ft).
11. Carefully fit two back-up washers to external groove on piston and place a new 'O' ring between them. Do not overstretch 'O' ring and ensure both 'O' rings and back-up washers fit snugly in groove.
12. Fit leather anti-extrusion ring to sleeve outer groove with hair grain side of leather towards piston.

NOTE: Leather rings should be soaked in light engine oil for 30 minutes prior to fitting to enable them to stretch over sleeve. A further 30 minutes should be allowed for drying before completing assembly.

13. Fit new 'O' ring against hair grain side of leather ring e.g. 'O' ring towards piston, leather ring on outside of groove. Ensure both rings fit snugly in groove.

Figs. E63

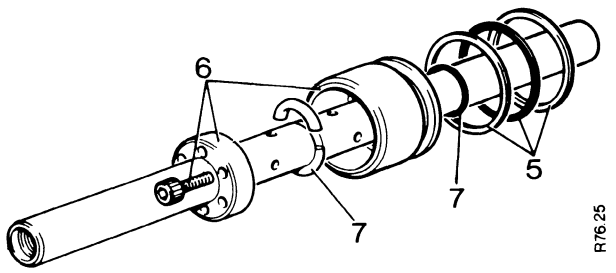

14. Fit plastic back-up washer to inner sleeve groove then fit new 'O' ring to piston side of washer. Ensure both rings fit snugly in groove.
15. Fit 'Nu-Lip' seal to centre inner sleeve groove.

NOTE: Early steering ram sleeves were not fitted with the 'Nu-Lip' seal.

16. Fit back-up 'O' ring to wiper seal groove, then using a special tool, push wiper seal against 'O' ring until outer lip of seal springs into sleeve recess. Do not use screwdriver or punch to fit seal as damage will result.
17. Thoroughly clean inside of cylinder bore then fill circlip grooves with thick grease.
18. Wipe ram rod clean, smear inside of one sleeve with clean oil and fit sleeve to ram rod. Push ram rod through sleeve seals with a screwing motion so that chamfered end of rod will enlarge seals as rod passes through.
19. Fit ram rod, with one sleeve fitted, into cylinder, carefully pushing piston seal and sleeve past circlip groove.
20. Compress circlip and push sleeve into cylinder until circlip springs out and engages in groove.
21. Smear inside of other sleeve with clean oil then fit sleeve to ram rod in same way as described above.
22. Check that both circlips are correctly seated in their grooves.
23. Refit ram to yoke assembly.

Ram Cylinder 1210 4 WD Mk. II

Dismantling — Figs. E66 and E67

1. Remove ram cylinder from front axle.
2. Release ball joint locking clamp and unscrew ball joint assembly.
3. Remove cylinder end cover using 'C' spanner (Fig. 72), then remove and discard dirt excluder.
4. Withdraw ram rod complete with piston and sleeve assemblies.
5. Remove nyloc nut and withdraw piston assembly. Separate piston halves then remove and discard back-up washers, seal, anti-extrusion ring and 'O' ring.
6. Remove sleeve assembly, then remove and discard 'O' ring, seal and anti-extrusion ring.
7. To remove pivot pin, prise out spring ring retainer and lift ball joint from cylinder case.

Reassembly — Figs. E68 to E71

8. Thoroughly clean all components and examine case and ram rod which should be smooth and free from score marks.
9. Fit new seal and anti-extrusion ring to sleeve with ring towards recess, then fit sleeve to ram rod from reduced diameter end.
10. Fit new 'O' ring to outer groove in sleeve.
11. Fit flat piston half with shoulder towards nut end of ram rod.
12. Fit back-up washer to piston half and two anti-extrusion rings to piston seal, then fit seal pack to ram rod.
13. Fit second piston half and back-up washer to ram rod and secure piston assembly with nyloc nut.
14. Smear oil over ram rod, piston and sleeve, and locate in cylinder. Push sleeve into cylinder by gently tapping with a soft hammer. Do not press into position with cylinder end cover as damage to threads will result.

Fig. E64

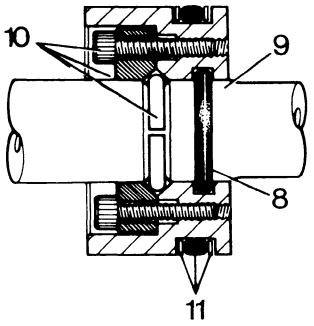

R76.24

Fig. E65

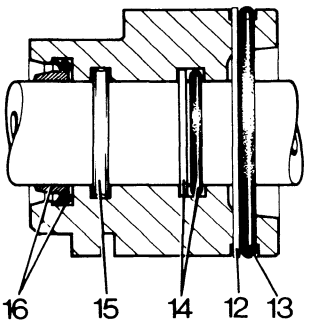

R76.22.

Fig. E66

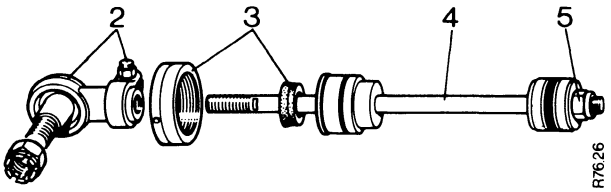

R76.26

Fig. E67

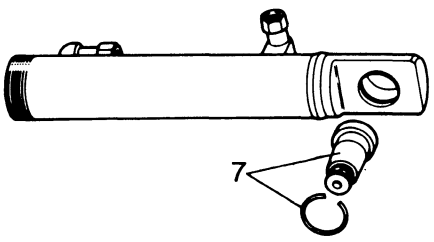

R76.28

15. Fit new dirt excluder to cylinder end cover, then refit cover to cylinder; do not over tighten end cover.
16. If necessary refit pivot pin.
17. Refit ball joint assembly to ram rod and secure with clamp.
18. Refit ram cylinder to front axle.

Fig. E68

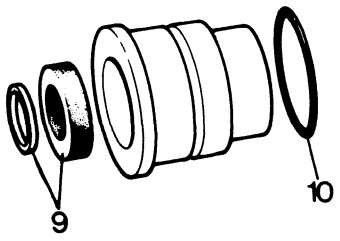

R76.29

Fig. E69

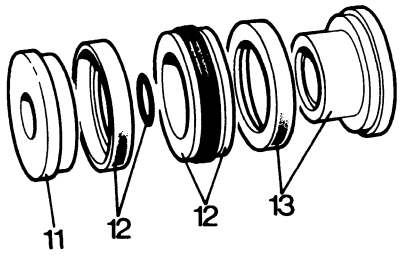

R76.31

Fig. E70

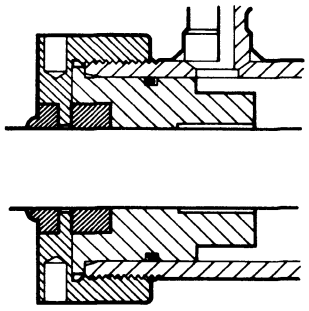

SECTION THROUGH SLEEVE

R76.30

Fig. E71

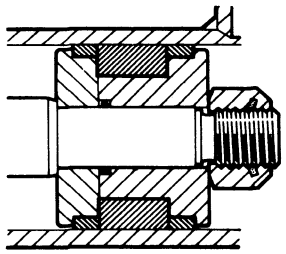

SECTION THROUGH PISTON

R76.32

Fig. E72

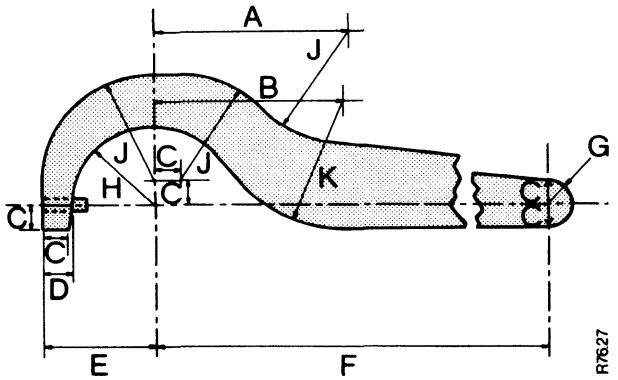

R76.27

A. 88.9 mm (3½ in)
B. 85.7 mm (3⅜ in)
C. 12.7 mm (½ in)
D. 14.28 mm (9/16 in)
E. 50.8 mm (2 in)
F. 30.48 cm (12 in)
G. 12.7 mm (½ in) radius
H. 37.5 mm (1 7/16 in) radius
J. 50.8 mm (2 in) radius
K. 60.3 mm (2⅜ in) radius

CYLINDER END COVER REMOVAL TOOL

Front wheel alignment		1.6-3.2 mm (0.0625-0.125 in)
Front hub bearing clearance		0.02-0.08 mm (0.001-0.003 in)
Stub Axle diameter 995, 996 heavy duty, 1210, 1212, 1410, 1412	upper	38.11-38.10 mm (1.501-1.500 in)
	lower	44.52-44.41 mm (1.749-1.7485 in)
885, 990, 995, 996		34.89-34.88 mm (1.374-1.3735 in)
Stub axle bush bores 995, 996 heavy duty, 1210, 1212, 1410, 1412	upper	38.14-38.16 mm (1.5015-1.5025 in)
	lower	44.55-44.49 mm (1.751-1.753 in)
Stub axle end float		0.08-0.63 mm (0.003-0.025 in)
Trunnion pin diameter 885		31.39-31.36 mm (1.250-1.249 in)
990, 995, 996, 1210, 1212, 1410, 1412		38.10-38.07 mm (1.500-1.499 in)
Trunnion pin bush bore 885		31.85-31.82 mm (1.254-1.253 in)
990, 995, 996, 1210, 1212, 1410, 1412		38.14-38.16 mm (1.5015-1.5025 in)
Ram ball peg pre-load, transverse rams		0.02-0.07 mm (0.001-0.003 in)
Column top bearing clearance (not 'Q' cab)		0-0.07 mm (0-0.003 in)
Steering pump type K944379-885		Hobourn-Eaton HE3601/7035/56
Maximum flow		15.9 litre/min (3.5 gall/min)
Maximum pressure		49.2 kg cm² (700 lb in²)
Steering pump type K944944-990, 995, 996, 1210, 1212, 1410, 1412		Plessey A23-17331
Output at 1000 rev/min (pump speed)		10.46 litre/min (2.3 gall/min)
Output at 1000 rev/min (engine speed)		13.41 litre/min (2.95 gall/min)
Relief valve pressure		70 kg cm² (1000 lb in²)
Servo (Orbitrol) valve K946083		Danfoss OSP125-150-0035
Displacement (per revolution)		125 cm²(7.62 in²)
Steering ram 885, 990, 995, 996, 1210, 1212		K945702
Stroke		36.19 cm (14.250 in)
Bore		47.16 mm (1.875 in)
Piston rod diameter		25 mm (1.000 in)
Steering ram transverse		K948609
Stroke		102 mm (4.000 in)
Bore		70.8 mm (2.752 in)
Piston rod diameter		31.39 mm (1.250 in)
Steering ram 1210 4WD Mk. II		K950325
Stroke		173 mm (6.811 in)
Bore		50 mm (1.968 in)
Piston rod diameter		22 mm (0.866 in)

Tightening Torques

Axle beam extension bolts	13.83 kg.m (100 lb ft)
990, 995 heavy duty	19.3 kg.m (140 lb ft)
Front wheel bolts	9.62 kg.m (70 lb ft)
Steering column flange bolts	6.9 kg.m (50 lb ft)
Steering wheel nut (not 'Q' cab tractors)	2.76 kg.m (20 lb ft)
Steering pump body bolts - 885	2.5 kg.m (18 lb ft)
990, 995, 996, 1210, 1212, 1410, 1412	4.0 kg.m (30 lb ft)
Steering pump pulley bolt - 885	2.7 kg.m (20 lb ft)
Steering pump drive gear nut (not 885)	6.22 kg.m (45 lb ft)
Ram piston socket screws Transverse	1.1 kg.m (8 lb ft)
Ram piston nut 885, 990, 995, 996, 1210, 1212	13.83 kg.m (100 lb ft)
Steering arm bolts	16.6 kg.m (120 lb ft)
Drop arm retaining bolt 885, 990, 995, 996	4.0 kg.m (30 lb ft)
1210	16.6 kg.m (120 lb ft)
Reservoir cover bolt 885	5.5 kg.m (41 lb ft)
Rocker arm clamp bolts	4.0 kg.m (30 lb ft)
Steering box bolts	4.0 kg.m (30 lb ft)
Steering box and cover bolts	2.7 kg.m (20 lb ft)

General Tightening Torques

The following torque figures apply to bolts of standard material with either course (UNC) or fine (UNF) threads and may be used for bolts and nuts not listed in the above table:

Thread diameter	Tightening Torque
1/4″	0.97 kg.m (7 lb ft)
5/16″	2.07 kg.m (15 lb ft)
3/8″	3.46 kg.m (25 lb ft)
7/16″	6.22 kg.m (45 lb ft)
1/2″	8.98 kg.m (65 lb ft)
5/8″	15.2 kg.m (110 lb ft)
3/4″	19.3 kg.m (140 lb ft)

Details of Change	Introduced at
Redesigned steering pump pulley guard. Changed from K944381 to K944975- March 1973	885: 625425 885G: 651239
Orbitrol valve to reservoir pressure pipe re-routed to afford improved accessibility - March 1973	885: 625425 885G: 651239
Orbitrol valve reduced in capacity from an OSP160 to OSP125 on all tractors - November 1974	TB42 steering (1277)
Steering pump and reservoir combined in a single unit on all tractors except 855 - November 1974	TB42 steering (1277)
Steering ram line valve incorporated into cylinder port. Steering ram K929055 becomes K945702 - February 1974	885: 629960 885G: 651438 990: 858243 995: 928254 996: 983736 1210: 723982 1212:1002222
Centre beam, main frame and trunnion pin on 885 narrow tractors redesigned to accept standard 885 trunnion pin on 1.250 diameter - October 1975	885N: 647025
Centre beam, main frame, and trunnion pin on 990, 995 and 996 tractors redesigned to enable axle to be removed without removing front extension - November 1975	990: 866452 995: 934315 996: 987778

Hydraulic System

SELECTAMATIC HYDRAULIC SYSTEM

990, 880, 780 AND 770 SELECTAMATIC TRACTORS

CASE CORPORATION

Pub 9-37211

PRINTED IN U S A

CONTENTS

SECTION	PAGE
Operation	1
Maintenance	12
Fault Finding	13
Adjustments	18
Hydraulic Pump	22
Control Valve Assembly	26
Control Mechanism	30
Ram Cylinder and Linkage	32
Top Link Sensing Unit	34
Dimensional Data	36
Summary of Design Changes	37
Live Single and Double Hydraulic Valves	39

SELECTAMATIC HYDRAULIC SYSTEM

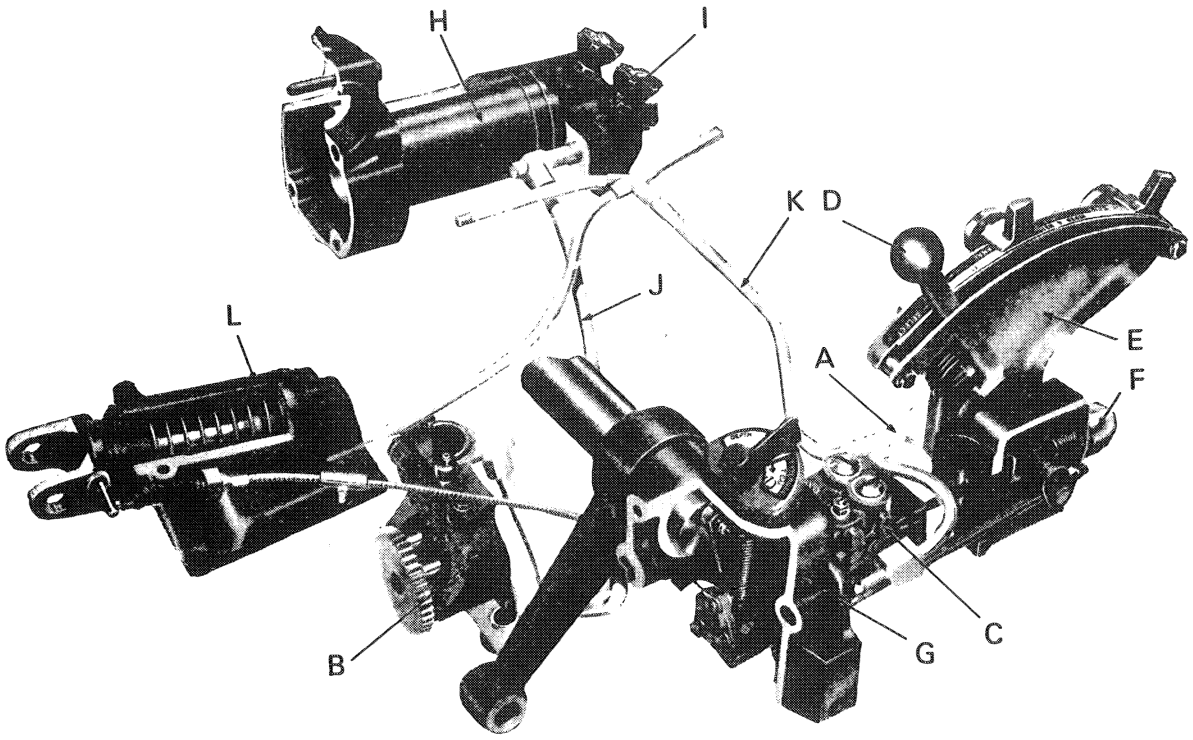

Figure 1. UNITS OF THE SELECTAMATIC HYDRAULIC SYSTEM

A.	Pump inlet pipe	B.	Hydraulic pump	C.	Control valve	D.	Control lever
E.	Quadrant	F.	Rate of lowering adjuster	G.	Right-hand ramshaft bracket	H.	Ram cylinder
I.	Three-way take-off valve	J.	High-pressure pipe	K.	Low-pressure pipe	L.	Sensing unit

OPERATION

A gear type hydraulic pump is mounted at the front of power take-off unit and is gear driven from the power take-off driving shaft. The pump draws transmission oil from the main frame through a gauze and magnetic filter and delivers it, via a steel pipe, to a valve chest inside the right-hand side of rear axle case. The valve chest houses the control valves and is connected to the control lever by a mechanical linkage. At the opposite end of the axle case to the control valve is the ram cylinder, which is connected to the control valve by a pipe inside the axle case. The ram cylinder is mounted through the axle case so that the front of cylinder is exposed to facilitate the pipe connection and enable a take-off valve to be fitted if required. The rear end of cylinder carries the ramshaft bearing and houses the latch which can be used to lock the linkage in the raised position. The ram cylinder piston is sealed in its bore by a rubber 'O' ring and when pushed down the cylinder by oil pressure turns the ramshaft and raises the linkage.

To enable the system to provide an automatic means of implement depth control the top link is attached to a sensing unit mounted on the top of power take-off case. The sensing unit consists of a freely-mounted shaft which is restrained from movement by a coil spring. Compression, or tension, in the top link therefore compresses the spring and allows a similar movement to take place in the flexible cable, which is connected to the control mechanism, and therefore automatically repositions the control valve when changes in depth occur.

The control lever A (Fig. 2), is the main control lever and has two ranges of movement, one range when using Height and Depth control and a different range for TCU/Ext. The lever pivot is friction loaded, so that it remains in position when set but will not remain in the Select position due to the spring inside the quadrant, which contacts the lever and pushes it forward if released.

The dial pointer B (Fig. 2), connects the control mechanism to the appropriate source, e.g., sensing unit for Depth control, or ramshaft for Height control, and also determines the control lever range. When the dial pointer is in the Depth and Height position

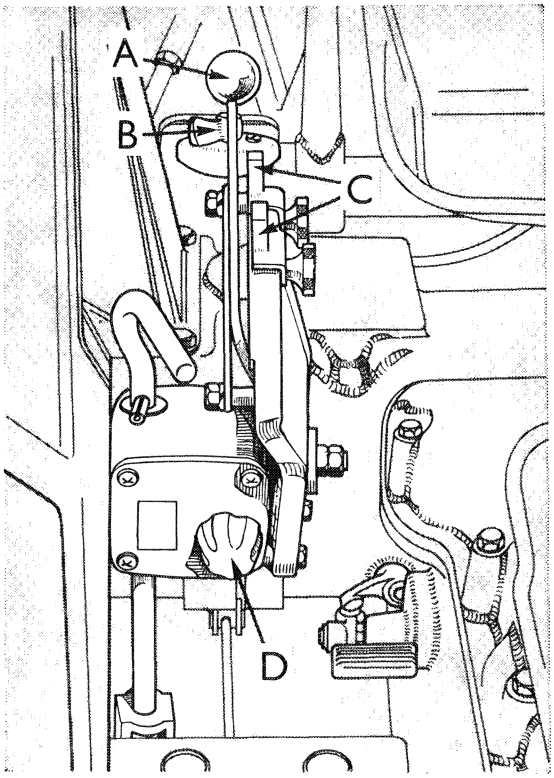

Figure 2. SELECTAMATIC CONTROLS

A. Control lever
B. Dial pointer
C. Finger guides
D. Rate of lowering adjuster

the control lever will raise the linkage when it is moved rearwards to touch the quadrant spring and give a full range of depth, or height settings as it is moved forward down the quadrant. When the dial pointer is in the TCU/Ext. position the control lever has to be held rearwards against the quadrant spring (the Select position) to raise the linkage, and when the lever is released the spring will push the lever forward into the Hold position. Moving the lever forward from the Hold position will first lower the linkage and then gradually apply TCU. The position where TCU starts being applied is marked on the quadrant and moving the lever forward from this position increases the amount of TCU until the end of the quadrant is reached, when maximum weight transfer is applied. The adjustable finger guides (Fig. 2) on the quadrant enable the control lever to be returned to its set position, e.g., Depth, Height or TCU setting, after it has been moved rearwards to lift the implement at the end of each run. The rate of lowering adjuster D (Fig. 2), determines the speed at which the linkage lowers when the control lever is moved forward. The speed at which the linkage, or attachment if using external equipment, lowers is flow controlled so that it is not affected by changes in weight on the linkage or attachment. Screwing the adjuster inwards reduces the setting of the flow control valve and therefore reduces the speed of lowering.

Explanation of TCU

The letters TCU stand for Traction Control Unit and are used to denote traction control, which is the David Brown method of increasing wheel grip by transferring weight from the implement to the tractor. The additional weight on the tractor therefore acts as rear wheel ballast and reduces wheel slip.

In order to explain how weight can be transferred from the implement to the tractor let us first consider a tractor with an implement attached to the linkage and in the raised position. In this condition the full weight of the implement is being supported by the tractor and the weight on the tractor rear wheels will be the unladen rear wheel weight plus the weight of the implement. As the centre of gravity of the implement is not directly over the rear wheel but some distance behind, the implement when raised will have a leverage effect and add more weight on the rear wheels than the actual implement weight.

When the implement is lowered into work, the tractor rear-wheel weight will be reduced to its normal unloaded weight and the weight of the implement will rest on the ground. As the wheel-grip depends on rear-wheel weight it will therefore be seen that we get maximum wheel-grip when the implement is supported by the tractor and the minimum when the implement is in work. This is exactly opposite to what is required : maximum wheel-grip is needed when the implement is in work and requires a considerable draught to pull it through the ground.

The effort required to raise the implement out of work is obtained from the oil pressure in the ram cylinder. The actual amount of oil pressure required depends on the implement weight and the geometry of the linkage, but let us assume that 1000 lb/sq. in. is required in the ram cylinder before the implement is raised out of work. If we therefore insert a relief valve into the hydraulic system so that it opens when the pressure reaches 750 lb/sq in. and then place the control lever in the Raise position the implement will not be raised, because 1000 lb/sq in. is required to do this, but the linkage will push upwards with a force equal to three-quarters of the implement weight. Since the linkage is now pushing upwards it has, in effect, weight on it and this weight will, of course, be added to the tractor rear-wheel weight in exactly the same manner as occurs when an implement is fully raised on the linkage. Since the total weight of the tractor and implement is, of course, unchanged, the additional weight on the tractor wheels is obtained by lightening the implement. In other words three-quarters of the effective implement weight has been transferred from the implement to the tractor and this is just what is required, for the transferred weight acts as ballast with the added advantage that it is instantly available when required, and does not waste fuel by placing extra weight on the tractor as would the fitting of ballast weights.

The amount of weight transfer therefore depends on the oil pressure in the ram cylinder : if the pressure is reduced the weight transference is reduced until the pressure is reduced to zero, when no transference will take place. This gives a further advantage over fixed ballast in that only the required amount of

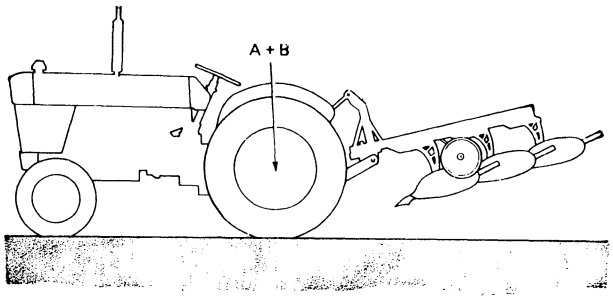

Figure 3
TRACTOR WITH IMPLEMENT RAISED ON LINKAGE
Weight on rear wheels equals tractor rear wheel weight 'A' plus weight of implement 'B'

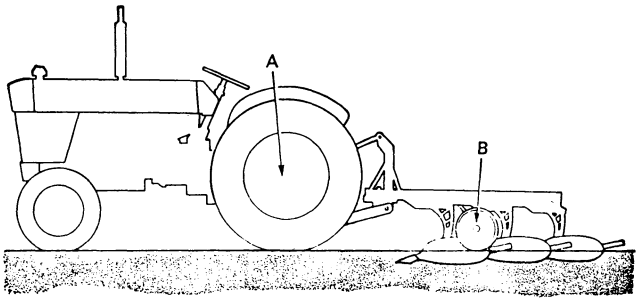

Figure 4
TRACTOR WITH IMPLEMENT LOWERED AND ZERO PRESSURE IN HYDRAULIC SYSTEM
Weight on rear wheels 'A' is tractor rear wheel weight only. Weight of implement 'B' resting on its own depth wheel

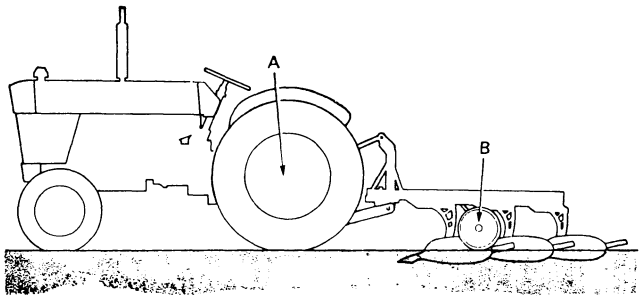

Figure 5
TRACTOR WITH IMPLEMENT LOWERED AND TCU PRESSURE IN HYDRAULIC SYSTEM
Weight on tractor rear wheels 'A' equals tractor rear wheel weight plus a proportion of implement weight 'B'

weight transference need be used and this can be applied as and when required by simply moving a lever whilst the tractor is working. As the application of too much weight transference could cause the implement to lift out of work, the weight transference pressure (which we call TCU pressure) is limited, so that excessive pressure cannot be applied.

As the use of TCU requires a constant oil pressure in the ram cylinder, in order to maintain a constant weight transference, the hydraulic system cannot also control the implement depth, as this requires a fluctuating pressure to counteract the changes in depth. Traction control can only be used when operating implements which have their own depth wheels and cannot be used when operating implements not equipped with depth wheels.

Explanation of Depth Control

The term Depth Control, sometimes referred to as draught control, is used to denote the method of controlling the operating depth of the implement by means of the tractor hydraulic system, instead of having a depth wheel on the implement.

When an implement such as a plough is in work it requires an effort, which is called draught, to pull it through the ground. The actual draught required depends on many factors, such as the number and width of the furrows and the ground conditions, but whatever the draught of any implement it must increase with the operating depth. If the depth is increased, the amount of work done by the plough is increased, therefore there is a corresponding increase

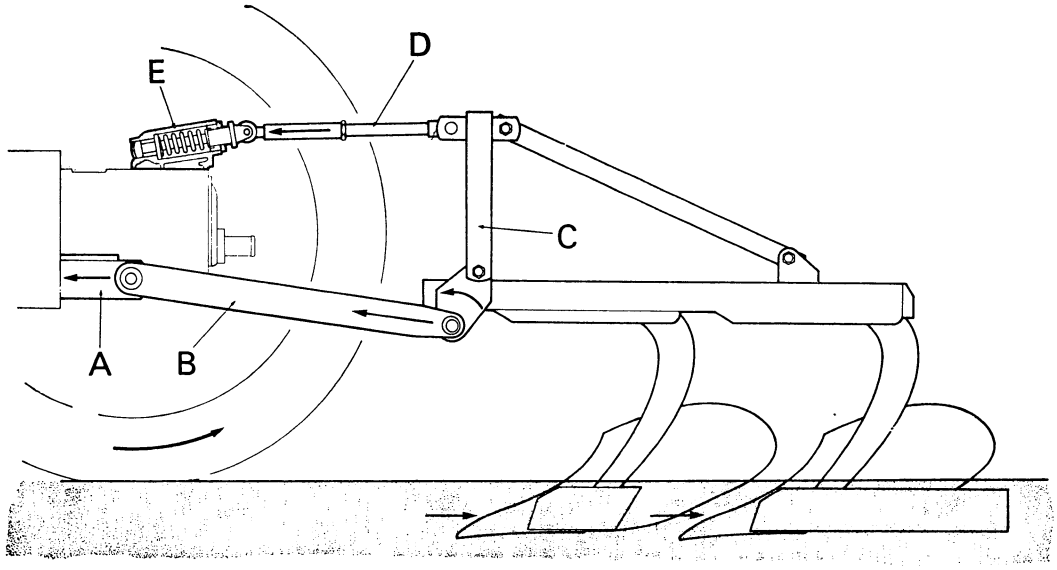

Figure 6. LINKAGE FORCES WHEN PLOUGHING

A. Tractor hitch bracket
B. Lower link
C. Plough headstock
D. Top link
E. Sensing unit

in the work done by the tractor which has to pull harder to combat the increased draught.

As the only connection between the tractor and plough is by means of the three-point linkage the draught required to pull the plough is transmitted through the three links. Due to the fact that the linkage is positioned some distance above the plough bodies the plough tends to pivot forward as it is pulled through the ground. The plough cannot, of course, actually pivot forward because the top link will resist any pivoting force by holding the plough headstock away from the tractor. The amount of force required to hold the plough depends on various factors such as the type of plough and the operating conditions, but whatever the force is it will be at a minimum when shallow ploughing, which requires a light draught, and greatest when the plough is at maximum depth, and requires its greatest draught.

The tendency for the plough to pivot forward and compress the top link is therefore a guide to the

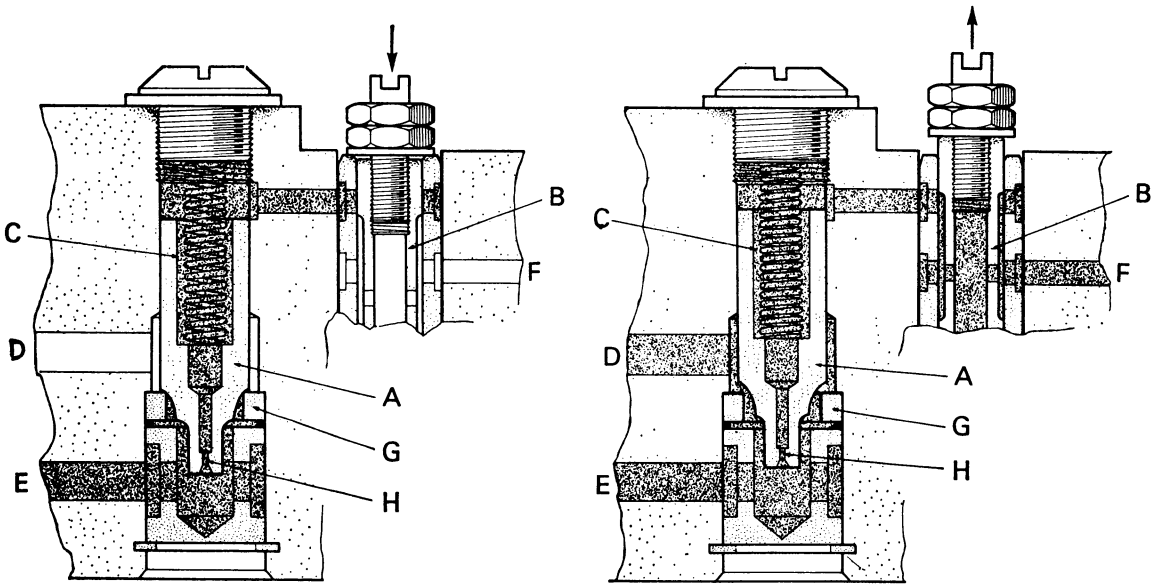

Figure 7. DIAGRAM OF PRESSURE BALANCED VALVE

A. Valve plunger
B. Spool valve
C. Plunger spring
D. Outlet port
E. Inlet port
F. Outlet from spool valve
G. Valve seat
H. Plunger orifice

operating depth of the implement, for as the depth increases the top link compression will increase and if a spring-loaded telescopic section is incorporated in the link the spring will be compressed according to the amount of compression. The telescopic section in the top link is called the sensing unit because it can "sense" the operating depth according to the amount of compression in the spring, and if the unit is connected to the hydraulic system control valve, so that the valve is operated when the spring is compressed, changes in implement depth will be transmitted to the hydraulic system. The implement depth can, therefore, be controlled automatically, for if the implement depth changes the compression in the sensing unit will also change and the control valve will be moved to raise, or lower the linkage until the original implement depth is restored. The system is then operating in Depth Control, for the implement depth is controlled by the tractor hydraulic system and not by the implement's own depth wheel.

When using certain implements such as heavy reversible ploughs the weight of the implement is so great that it is sufficient to prevent the top link from being compressed, even at maximum depth. As the tendency for the plough to turn forwards when it is in work is however always present, regardless of implement weight, the amount of tension in the sensing unit will decrease as the implement depth is increased and operate the control valve in exactly the same way that it operates when the sensing unit is under varying amounts of compression.

Operation of the Control Valve

Figure 7 shows a valve plunger in diagrammatic form. The plunger A has a small orifice through its centre so that oil can pass from the bottom to the top of the plunger. When the spool valve B is open oil flowing through the plunger orifice can then return to the reservoir and no pressure build-up will take place above the plunger, and as the plunger spring C is not strong enough to hold the spring against the oil flow the plunger will be pushed open, allowing the oil to flow out of port D at very low pressure.

When the spool valve B is closed the oil flowing through the plunger orifice cannot escape and will therefore build up pressure until the pressure over the valve is equal to the pressure below it. As the plunger now has equal pressure on each end the spring will push the valve towards its seat. The flow through the outlet port D will then cease and the pressure in the inlet port E will rise very rapidly. The increase of pressure in the inlet port E will not, however, have any effect on the valve plunger as there will be a corresponding increase in pressure above the plunger, due to oil being able to pass through the orifice, which will balance the plunger and allow the light spring C to hold the plunger on its seat.

The valve plunger A can therefore be opened or closed, by opening or closing the spool valve B which is not handling the full pump output but only the amount of oil which can pass through the plunger orifice. The spool valve therefore only

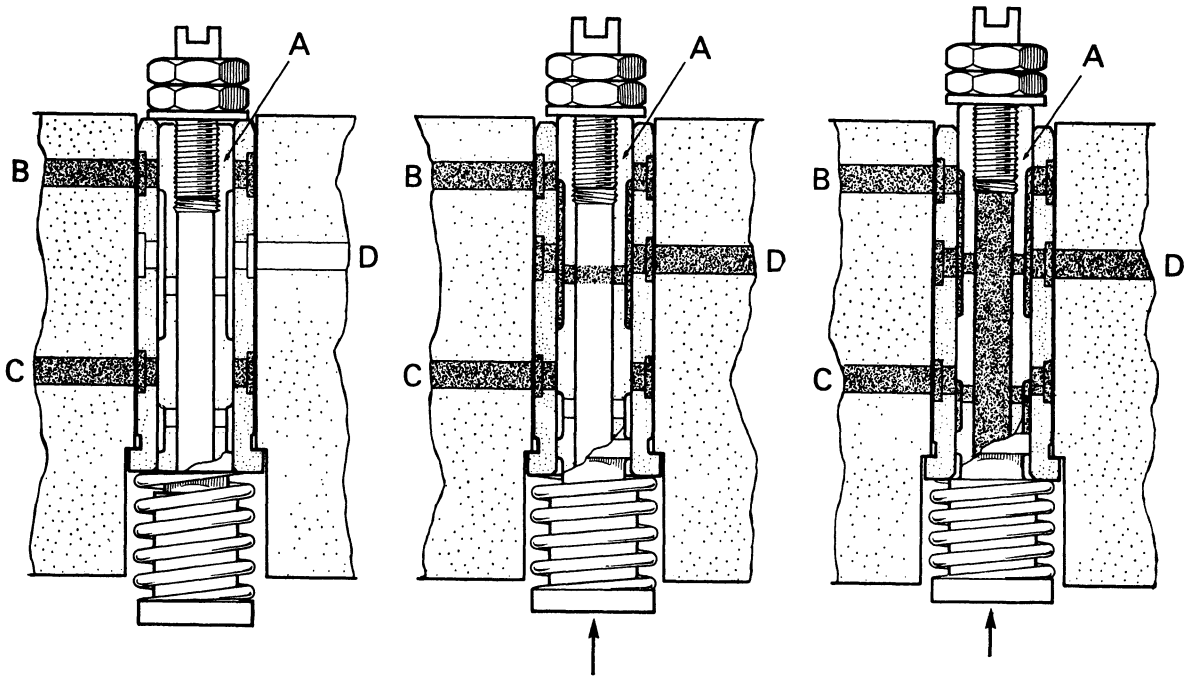

Figure 8. DIAGRAM OF SPOOL VALVE

LIFT POSITION	HOLD POSITION	LOWER POSITION
Both ports 'B' and 'C' closed	Port 'B' open, port 'C' closed	Both ports 'B' and 'C' open

A. Spool B. Inlet from by-pass valve C. Inlet from Hold valve D. Outlet port

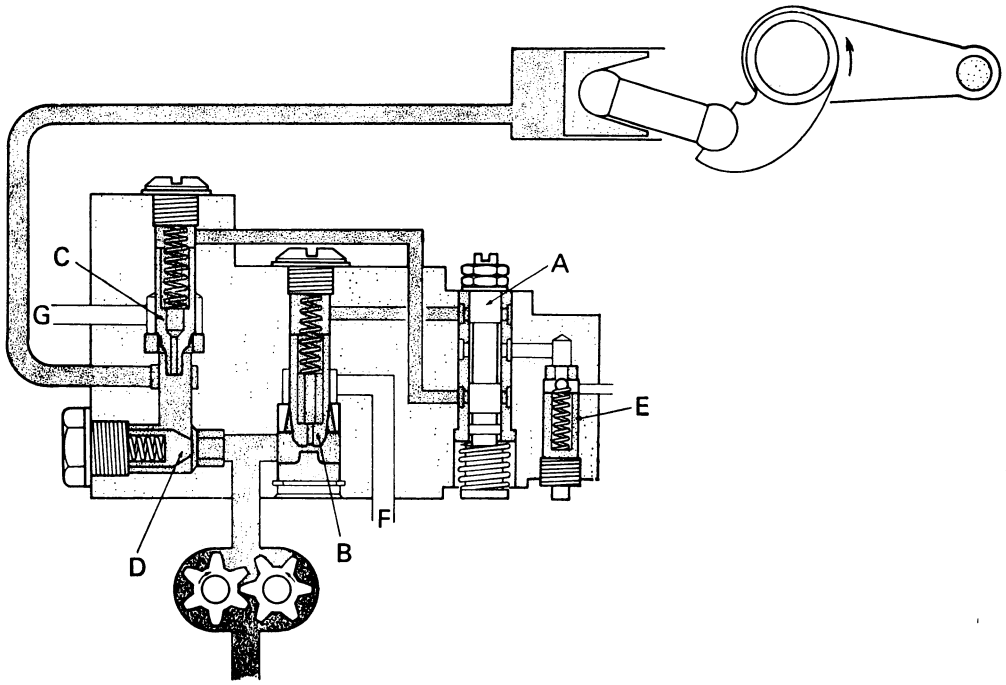

Figure 9. SPOOL VALVE AND PLUNGERS IN 'RAISE' POSITION

A. Spool valve
B. By-pass plunger
C. Hold plunger
D. Non-return valve
E. Traction control valve
F. Outlet port (By-pass valve)
G. Outlet port (Hold valve)

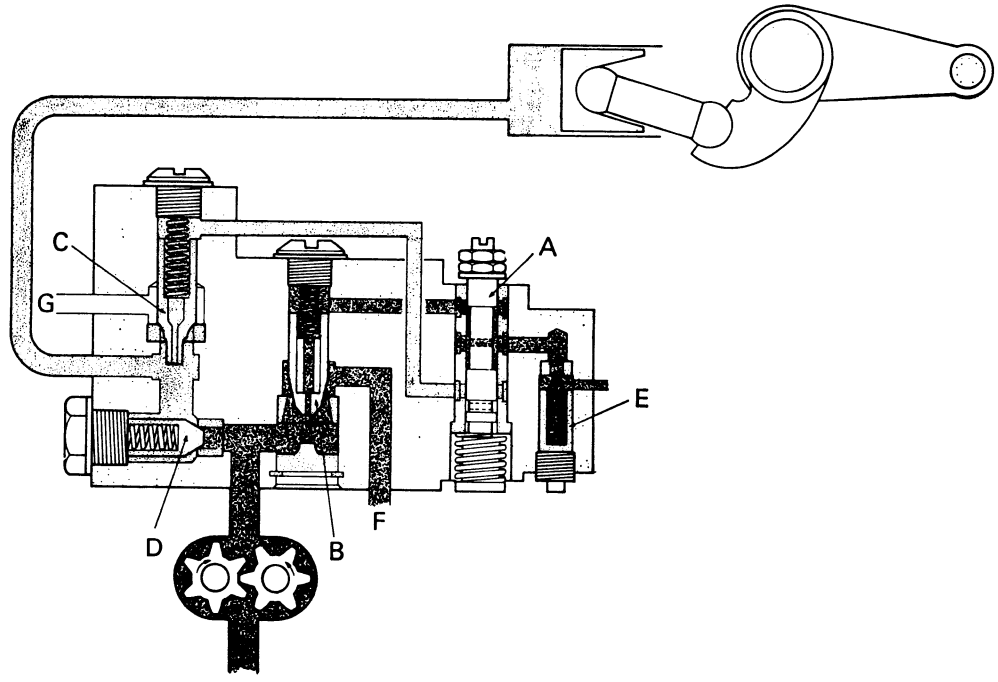

Figure 10. SPOOL VALVE AND PLUNGERS IN 'HOLD' POSITION

A. Spool valve
B. By-pass plunger
C. Hold plunger
D. Non-return valve
E. Traction control valve
F. Outlet port (By-pass valve)
G. Outlet port (Hold valve)

handles a small volume of oil and requires only a small amount of movement, which makes the valve very sensitive.

The basic elements of the control valve are shown in Fig. 9. The spool valve A has two lands so that it can control two plungers and is spring loaded so that it is held with both ports closed. The by-pass plunger B and the hold plunger C are held on their seats by light springs and when the spool valve ports are closed the spring tension is sufficient to hold the plungers closed, as oil can pass through the plunger orifice and balance the pressure on both ends of the plunger. Pump output therefore builds up pressure, pushes the non-return valve D open and passes into the ram cylinder to raise the linkage.

When the spool valve A is raised, as in Fig. 10, so that the port from the by-pass valve B is open, oil flowing through the plunger orifice will flow through the open spool valve faster than it can pass through the orifice. The pressure on the top of the plunger will therefore be reduced and the higher pressure under the plunger will push the plunger open, so that pump output will circulate through port E at very low pressure. The pump will therefore be relieved of load, as it is only circulating oil at very low pressure, but the linkage will be in the Hold position, due to valves C and D being closed.

When the spool valve A is raised (Fig. 11) the ports from both valves B and C are open and pressure on the top of the plunger C will therefore be reduced and allow the oil pressure to push the plunger open. The oil pump output will then continue to circulate oil at low pressure but the linkage will also be lowered due to the ram piston pushing the oil out of the open valve C.

To obtain Traction Control (TCU), the spool valve is placed in the Lower position, so that both plungers B and C are away from their seats, and then the flow from the spool valve is restricted by the valve E. This valve is the TCU valve and is spring loaded so that it restricts the flow through the spool valve and causes back pressure to build up over both plungers. This back pressure then pushes the plungers towards their seats until an equal pressure builds up below them. As the back pressure below the plungers is transmitted to the ram cylinder the effect of closing valve E is to obtain pressure in the ram cylinder. The actual pressure obtained in the ram cylinder is determined by the amount of compression in the spring—the greater the spring tension the greater the pressure required to lift the ball E off its seat—and as the amount of weight transference (TCU) depends on the amount of pressure in the ram cylinder, valve E gives a very simple and convenient control of weight transference.

Figure 13 shows the complete control valve in diagrammatic form. The spool valve A, plungers B and C, non-return valve D and TCU valve E are as already explained. The plunger H is a flow control valve and is held in the fully open position by its spring. When the plunger C is lifted off its seat the weight on the linkage pushes the ram piston along the cylinder and forces the oil into the plunger. As the oil passing through the plunger H can only escape by passing out of the adjustable orifice I, the back pressure caused by the oil being forced through

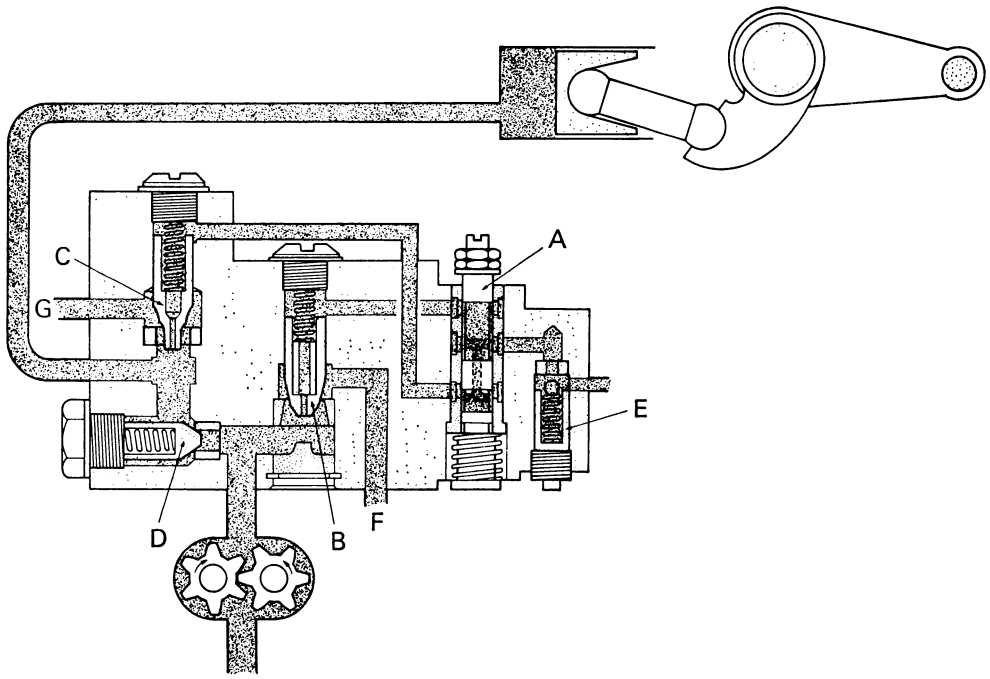

Figure 11. SPOOL VALVE AND PLUNGERS IN 'LOWER' POSITION

A. Spool valve
B. By-pass plunger
C. Hold plunger
D. Non-return valve
E. Traction control valve
F. Outlet port (By-pass valve)
G. Outlet port (Hold valve)

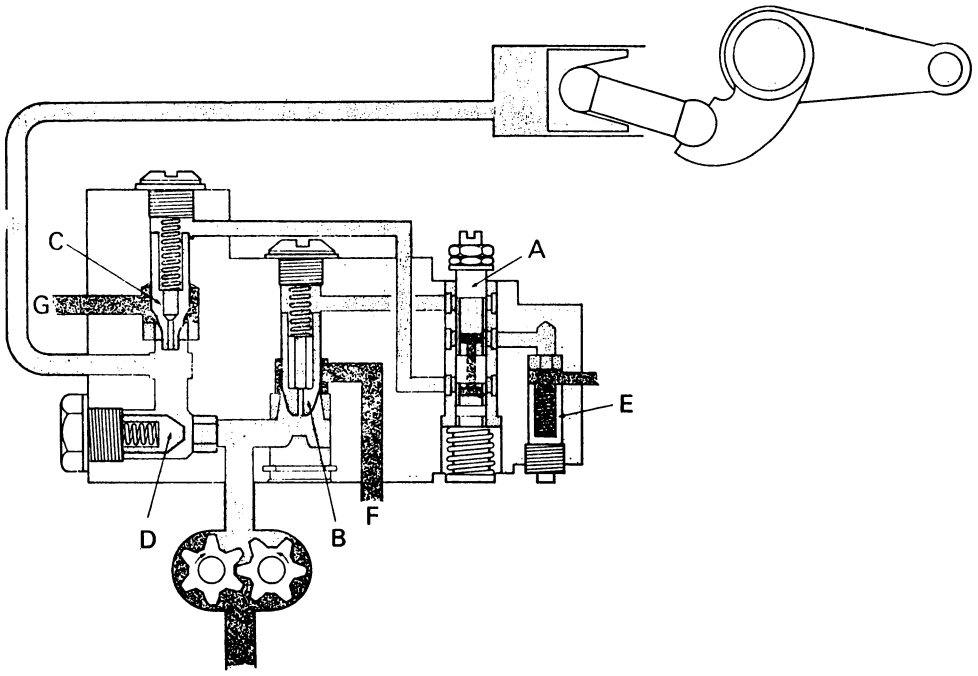

Figure 12. SPOOL VALVE AND PLUNGERS IN TRACTION CONTROL POSITION

A. Spool valve
B. By-pass plunger
C. Hold plunger
D. Non-return valve
E. Traction control valve
F. Outlet port (By-pass valve)
G. Outlet port (Hold valve)

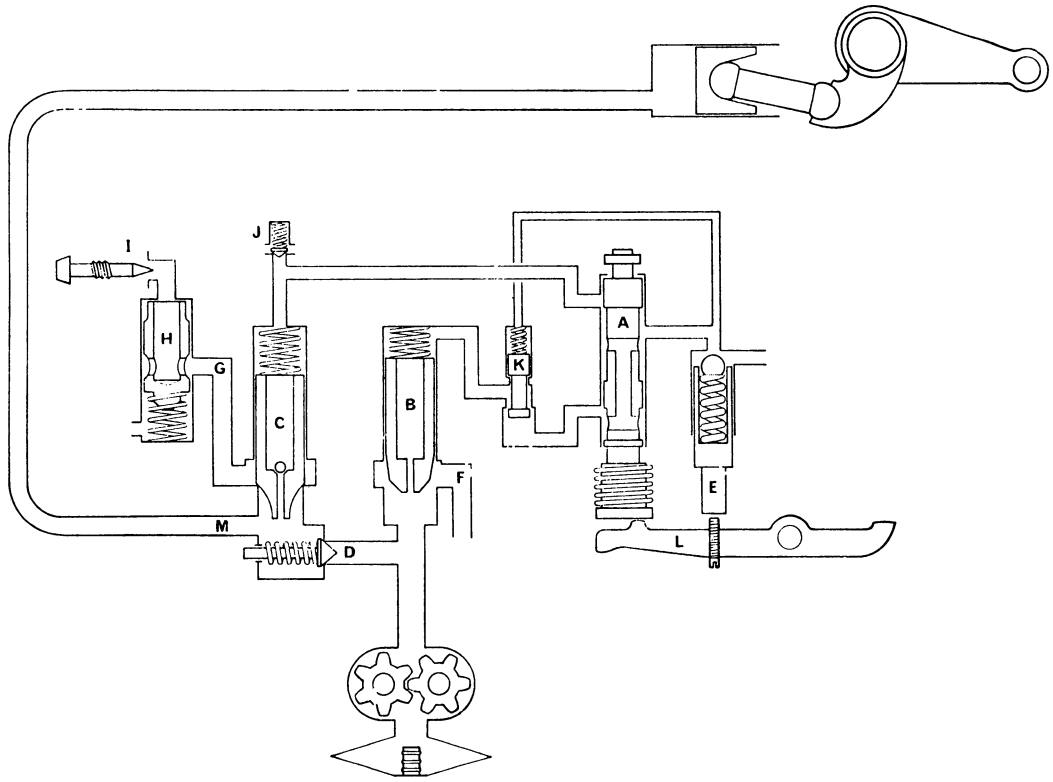

Figure 13. DIAGRAM OF CONTROL VALVE

A. Spool valve
B. By-pass valve plunger
C. Hold valve plunger
D. Non-return valve
E. TCU valve
F. Outlet port (By-pass valve)
G. Outlet port (Hold valve)
H. Rate of lowering valve
I. Adjustable orifice
J. Hold relief valve
K. Latching valve
L. Rocker lever

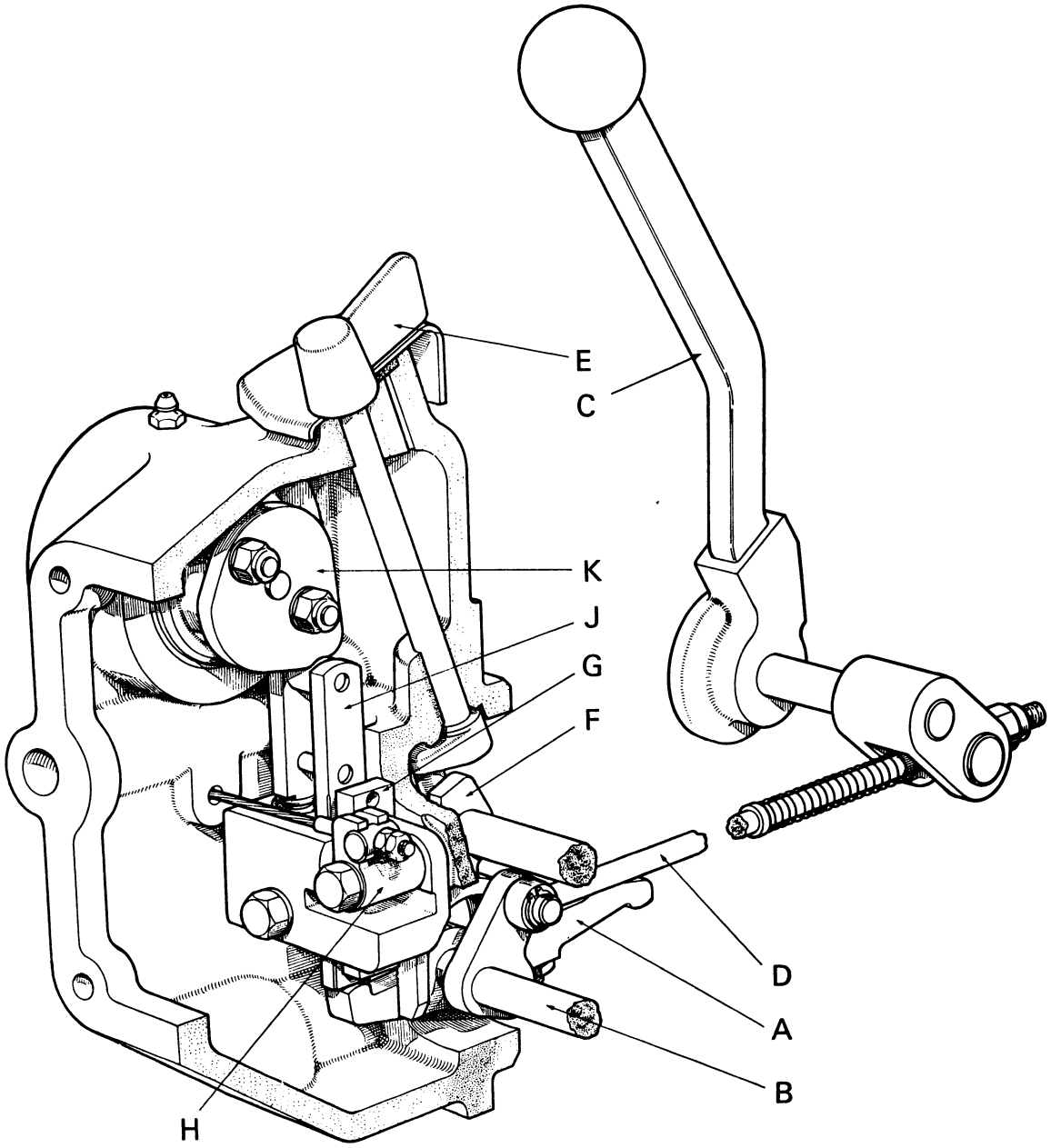

Figure 14. CONTROL MECHANISM

A. Rocker lever
B. Rocker shaft
C. Control lever
D. Connecting link
E. Dial pointer
F. Selector fork
G. Push rod (Depth control)
H. Actuating lever
J. Push rod (Height control)
K. Ramshaft cam

the orifice will act against the plunger spring and push the plunger until it partially closes the inlet port; the flow through the valve will therefore remain constant irrespective of load. If the load is high the greater back pressure will move the plunger further and reduce the amount of port opening until the flow is reduced to the same rate as is obtained with a light load. As the size of the orifice I determines the flow setting, the orifice has a tapered needle, and screwing the needle in or out, will adjust the flow, and therefore the lowering speed of the linkage.

The valve J is a pressure relief valve and limits the pressure over the valve plunger to a safe maximum. When an implement, or attachment, is supported hydraulically the pressure in the system fluctuates due to shock loading and if the tractor is driven at speed over rough ground the pressure created can be considerable. The valve J therefore protects the system from damage by opening when the pressure is sufficient to push the valve off its seat.

The remaining valve K is the latching valve and the purpose of this is to make the operation of the

by-pass valve B so positive that it responds quickly when the spool valve movement is very small. If the tractor was left standing with the engine running and the linkage raised the hydraulic system would be in the Hold position and the pump would be only circulating oil at very low pressure. If, however, the implement lowers very slightly the spool valve would only partially close the port from valve B and the plunger would not move fully towards its seat. The pressure created would not then be sufficient to push valve D open and raise the linkage but would place the pump under unnecessary load. The latching valve prevents this condition occurring and operates in the following manner. When the spool valve partially closes, the restriction to the flow causes a pressure rise to take place and this pressure pushes the latching valve against its spring. Since pushing the latching valve against its spring also closes the passage to the spool valve the oil flow ceases and causes a rapid build up of pressure over plunger B which snaps closed and quickly raises sufficient pressure to raise the linkage. The latching valve therefore gives the by-pass valve quick response to small spool valve movements, but as this rapid response is not required when using TCU (weight transference) a drilling from the TCU valve allows pressure to be applied on the spring side of the latching valve. Closing the TCU valve does not therefore operate the latching valve as equal pressure is applied to both sides, enabling the spring to hold the valve in the full open position.

The mechanism for operating the control valve is shown in Fig. 14. The rocker lever A is mounted on an eccentric rocker shaft B which is connected to the control lever C by means of the link D, so that moving the control lever therefore raises, or lowers, the rocker arm pivot point. In addition to being able to pivot on the rocker shaft B the rocker lever A can also slide sideways into any of the three positions. When the dial pointer E is turned into the Depth control position the fork F slides the rocker lever sideways so that the rear end of the rocker lever is under the push rod G and the front end of the lever is under the spool valve. As the push rod G is connected to the sensing unit by means of the flexible cable, movement in the sensing unit is therefore transmitted to the spool valve via the cable, push rod and rocker lever. The point at which the sensing unit moves the spool valve into the Hold position (and therefore the depth at which the implement operates) is determined by the control lever, which lowers the pivot point of the rocker lever to give the required spool valve position when the implement reaches its working depth. In addition to being under push rod G the rocker lever is not clear of the Height control push rod J and as the ramshaft turns into the fully raised position the push rod pushes the rocker lever downwards and moves the spool valve into the Hold position. The pump is thus relieved of the load automatically when the linkage reaches full height.

When the dial pointer is in the Height control position, the fork F slides the rocker lever A sideways so that its rear end is clear of the push rod G but under the push rod J, and the front end of the lever is under the spool valve. As the push rod J is held against the ramshaft cam, the rod will be pushed downwards as the ramshaft turns, and the rocker lever will therefore return the spool valve to the Hold position. The point at which the spool valve reaches the Hold position (and therefore position at which the linkage is held stationary) is determined by the control lever, which turns the rocker shaft so that the pivot point of the rocker lever is lowered until the required position is reached.

When the dial pointer is in the TCU/Ext. position the fork F slides the rocker lever so that its rear end is clear of both push rods and the front of the lever is raised by the abutment block.

The lever therefore pivots on the abutment block and is not affected by the movement of either push rod. When the control lever is held fully rearwards the rocker lever is fully lowered, so that the spool valve is in the Lift position. When the control lever is moved into the Hold position, the rocker shaft B is turned and lifts the rocker lever so that it pushes the spool valve into the Hold position. Moving the control lever further forward, into the Lower position, will lift the rocker lever and push the spool valve past the Hold position and into the Lower position. When the spool valve is in the Lower position the rocker lever is raised so high that it is almost touching the TCU valve K and when the control lever is moved into the TCU position the rocker lever is raised so that it pushes the TCU valve on to its seat. The further the lever is moved, the higher the rocker lever is raised and harder the TCU valve is pushed on its seat. The spring inside the TCU valve is therefore compressed further and the greater is the TCU pressure: the position of the control lever therefore determines the TCU pressure.

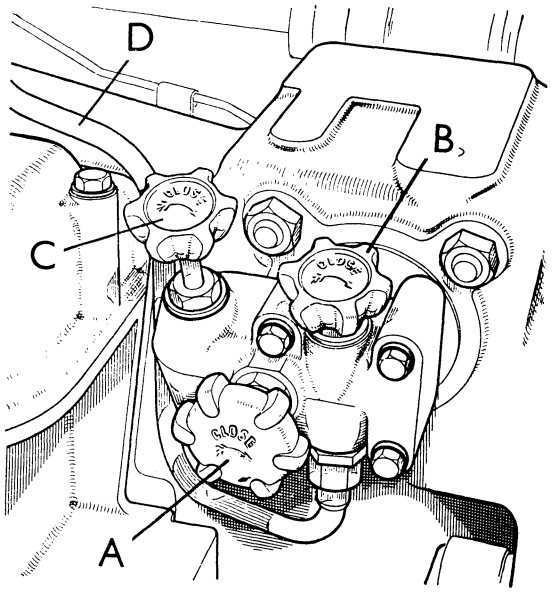

Figure 15. THREE-WAY TAKE-OFF VALVE

A. Ram cylinder valve
B. 1st Take-off valve
C. 2nd Take-off valve
D. Pipe to quick-release coupling

Operation—External Equipment

In order to operate external equipment the oil flow has to be directed from the ram cylinder to the ram on the attachment. For attachments such as loaders, which incorporate single-acting rams, the fitting of a three-way valve is sufficient. This valve bolts on to the front end of the ram cylinder, in place of the connector, and has three screw-type valves. When the centre valve is screwed in, the oil supply to the ram cylinder is cut off and the linkage will then remain stationary. Opening one of the other valves then directs the oil through the appropriate connection so that the attachment will be raised, held or lowered, according to the position of the control lever.

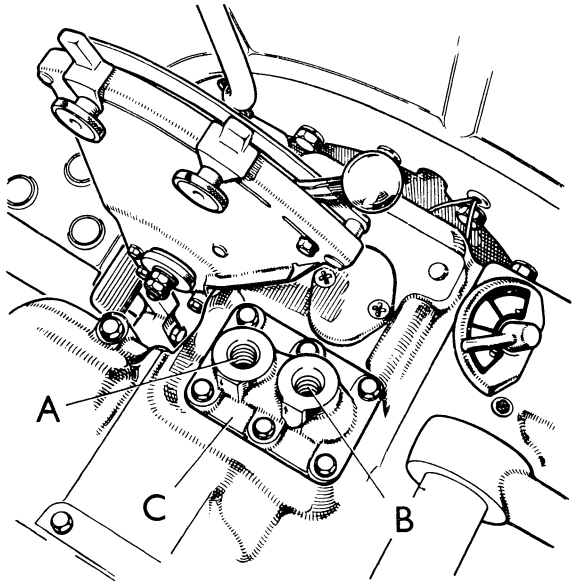

Figure 16. OIL RETURN CONNECTION — 880 AND 990 TRACTORS

A. Return connection ($\frac{7}{8}$ UNF) B. Oil feed ($\frac{3}{4}$ UNF)
C. Connecting plate (917127)

Attachments, such as hydraulic motors, which require a continuous supply of oil, can be supplied from the three-way valve, but a return pipe is also required and this should be connected so that the returned oil is fed into the gearbox/power take-off lubrication pipe, otherwise damage may be caused to the transmission, due to lack of lubrication. On 990 and 880 tractors the return feed should be taken into the front tapping point of the rear axle cover plate (Fig. 16). A number of early tractors were fitted with cover plates that only had a venting point and these can be changed for a cover, Part No. 917127, incorporating tapped bosses. On 770 tractors a return feed can be taken into the connecting plate under the oil filter mounting (Fig. 17). This plate (917150) was not fitted to early tractors but should be fitted if an oil return point is required.

Equipment, such as loaders fitted with bucket dump rams, incorporating their own control valves and not requiring to be operated in conjunction with

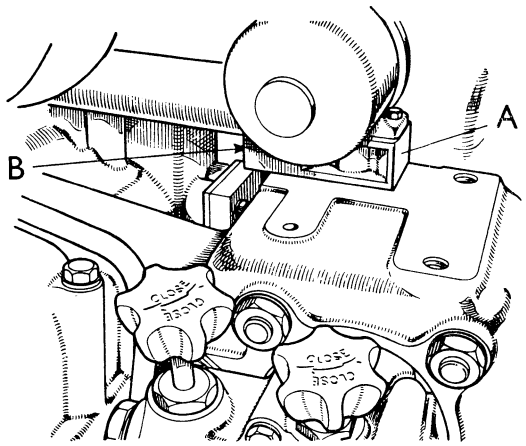

Figure 17. OIL RETURN CONNECTION — 770 TRACTOR

A. Connecting plate (917150)
B. Pipe connection ($\frac{7}{8}$ UNF)

the linkage, can also be operated from a three-way valve. The control valve feed is taken from the three-way valve and the return connected into the appropriate tapping point as previously explained.

Equipment such as roll-over ploughs, which are fitted with double-acting rams and are operated in conjunction with the linkage, can be operated by mounting a double-acting valve in a suitable position and connecting the feed and return to the two bosses on the rear axle cover plate (Part No. 917127). A number of proprietary valves are available which are suitable for this purpose but the valve used must have a closed neutral position, i.e., there must be no flow from the inlet to the outlet port when the valve is in the neutral (Hold) position, otherwise oil will flow into the lubrication pipes and the linkage will not rise when the control lever is placed in the Raise position.

Fitting Instructions—Three-way Take-off Valve

The valve is bolted directly on to the front of the ram cylinder and replaces the existing connector, Part No. 910107.

First **thoroughly clean the area round front end of ram cylinder** before removing the four bolts attaching the connector to ram cylinder. Remove and discard connector. Wipe ram cylinder face and examine the oil pipe 'O' ring; replace this if it is not in good condition.

Clean face of valve body and fit 'O' rings into the two counterbores. The smallest ring seals the cylinder inlet but the largest ring only seals the valve body core hole. Carefully place valve body in position over the pipe end and fit the four bolts. Tighten the bolts evenly, and by diagonal selection, until fully tightened.

Fit the rear coupling pipe into the union on left-hand side of valve body and mount the support bracket on to the side of seat support. The support bracket is double sided, so that it can be fitted either way round according to the type of seat support

fitted. Fit Exactor coupling into support bracket and secure with the locknut. Connect rear end of the pipe to coupling and firmly tighten both unions. If a second external connection is required this should be fitted into the inner outlet, which is tapped ½ in. BSP. If a second take-off is not required the outlet should be blanked off with the plug supplied.

As it is necessary to hold the control lever against the quadrant spring to obtain a supply of oil through the take-off valve, a catch unit (U730) is available to enable the control lever to be locked in the Raise position.

This unit is essential when operating implements which require a continuous flow of oil, e.g., hydraulic mower and David Brown Super loaders, and consists of a catch plate and stud. The stud is fitted into the hole provided in the control lever and the catch plate is attached to the rear screw of quadrant abutment plate. When the control lever is moved fully rearwards the catch plate can then be hooked over the stud to retain the lever in position.

MAINTENANCE

The greatest enemy of any hydraulic system is dirt, and very special care must be taken to ensure that no dirt is allowed to enter the system. **No dismantling of any kind must be carried out until all dirt is removed from adjacent areas.** Do not remove the transmission filler plug without first cleaning the area round the plug. All containers and funnels must be very clean and the same standards of cleanliness maintained as are observed with diesel engine fuel systems.

After first 50 hours (New Tractors Only)

As the transmission is initially filled with special oil and a special element is fitted in the by-pass filter it is essential that these are changed after the first 50 hours.

When a new tractor has completed its first 50 hours of operation, drain the transmission oil, preferably whilst hot, through the drain plugs in the sump cover and rear axle case. Remove the sump cover and filter. Remove the magnetic filter from the centre of the gauze filter. Clean the magnet, wash the gauze in paraffin and clean with an air blast. Clean the cover and replace the assembly, fitting a new gasket and tightening the bolts evenly to avoid distorting the cover.

Clean the outside of by-pass filter before removing filter bowl. Remove and discard filter element, flush the bowl out with paraffin and fit a new element. Replace the bowl, ensuring that it seals correctly on the large sealing ring.

Check that the drain plugs are tight and clean the area round the filler plug. Remove filler plug and fill to the correct level with new oil of the recommended grade. Start engine and check that there are no leaks from filter or sump cover.

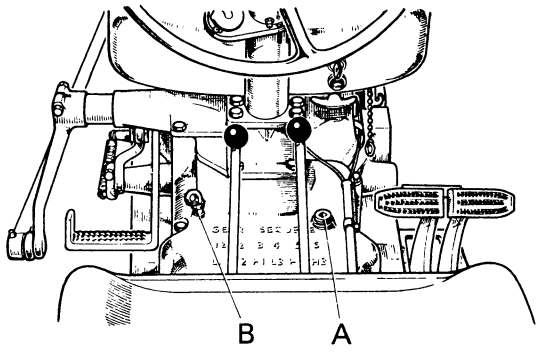

Figure 18. OIL FILLER AND DIPSTICK

A. Gearbox oil filler plug B. Gearbox oil dipstick

Every 60 hours

Clean the area round dipstick before removing it and check the oil level. Top up, if necessary, to the high mark on dipstick with the recommended grade of oil.

Grease the ramshaft bearings (three points), the sensing unit cable and the linkage (five points). Later tractors also have a grease nipple on top of sensing unit.

Every 500 hours

Clean the area round rear sump cover and drain transmission oil into a **clean** container. When the oil has been drained, remove container from under the tractor to prevent dirt falling into the oil, and remove sump cover and filter. Remove magnetic filter from the centre of gauze filter. Clean the magnet, wash the gauze in paraffin and clean with an air blast. Clean the cover and replace the assembly,

fitting a new cover gasket and tightening the bolts evenly to avoid distorting the cover.

Clean the outside of by-pass filter before removing filter bowl. Remove and discard the element, flush the bowl out with paraffin and fit a new element. Replace bowl, ensuring that it seats correctly on the large sealing ring.

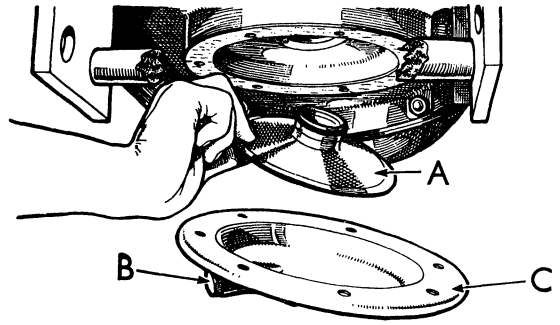

Figure 19. GAUZE AND MAGNETIC FILTER

A. Filter gauze B. Drain plug C. Sump cover

Check that sump cover drain plug is tight and clean the area round filler plug. Remove plug and refill the transmission with the recommended grade of oil. If the original oil is clean it may be re-used, except for the last gallon which should be discarded. Start engine and check that there are no oil leaks from filter or sump cover.

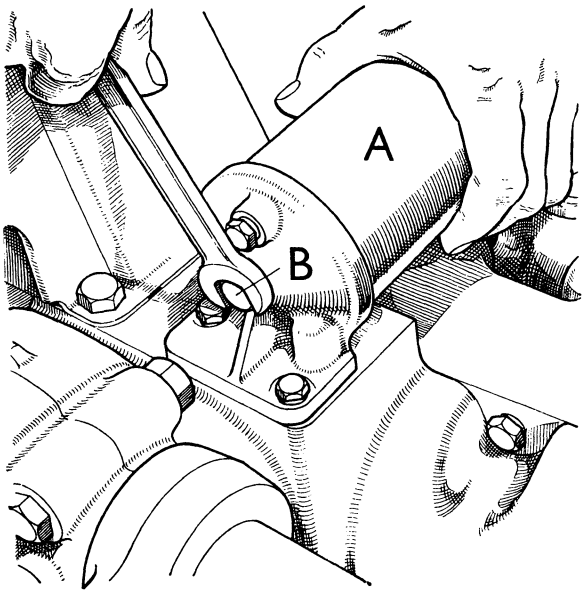

Figure 20. BY-PASS OIL FILTER

A. Filter bowl B. Bowl securing bolt

Every 1,000 hours

Drain transmission oil, preferably whilst hot, through the drain plugs in sump cover and rear axle. Remove and clean the gauze and magnetic filter and fit a new by-pass filter element, as during the 500-hour service, but refill with new oil of the recommended grade. Do not replace the original oil.

FAULT FINDING

Given an adequate supply of clean oil the Selectamatic hydraulic system will give long and trouble-free service. Unsatisfactory operation may, however, be experienced if the system is incorrectly adjusted or if dirt is allowed to enter the system. If the system operates incorrectly the cause should first be established before any readjustments or dismantling is undertaken.

An essential item when fault finding, or checking the hydraulic system, is a pressure gauge, and a suitable gauge, with adaptor for connecting the gauge into the system, is shown in Service Tool Leaflets A26, A30 and A36.

Failure to Lift

1. If a take-off valve is fitted, check that the valve is open to the ram cylinder.
2. Place control lever in the Select position and move dial pointer into TCU/Ext. (This will disconnect the sensing unit and ramshaft so that any fault in either of these will not affect the operation.)
3. Screw the rate-of-lowering adjuster fully inwards and remove by-pass oil filter. Hold a finger over the right-hand oil port in the axle case and start engine. With the control lever in the Hold position there should be a flow of oil out of the port, but when the lever is held against the quadrant spring (in the Raise position) the flow should cease. If no oil flows out of the port when the lever is in the Raise position the fault is most likely to be in the pump and the sensing unit should be removed from the power take-off casing and the operation of the relief valve checked (see Page 22). If the oil flow does not

cease when the control lever is moved from Hold to Lift, the by-pass valve plunger is not being closed and the control valve should be checked.

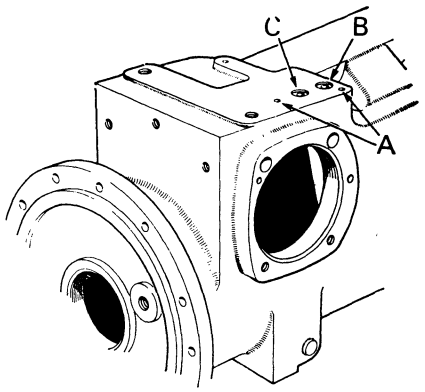

Figure 21. BY-PASS FILTER MOUNTING

A. Bolt holes B. Feed port C. Return port

Remove cover plate from top right-hand side of axle case, after removing all dirt from the adjacent area, and check the adjustment of connecting link by holding control lever fully in the Lift position and flicking the dial pointer from Height to TCU/Ext. and back several times. The end of the spool valve is on top of the control valve and movement can be checked by resting a finger on top of the locknuts. If the valve is not lifted when the dial pointer is flicked in this manner the connecting link adjustment is satisfactory. If the spool valve lifts when the dial pointer is flicked, the connecting link should be readjusted (see Page 19).

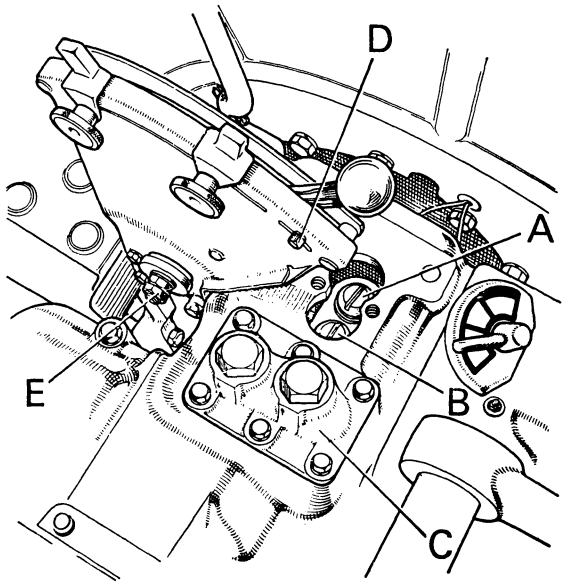

Figure 22. CONTROL VALVE PLUGS

A. Plug — By-pass plunger
B. Plug — Hold valve plunger
C. Connector plate (990/880 Tractors only)
D. Quadrant spring carrier retaining nut
E. Control lever pivot

If the spool valve movement is correct the fault is probably due to dirt in the control valve. Remove the two plugs from top of control valve and withdraw the plungers and springs: a clean piece of ½ in. (12 mm) wood dowel will assist removal of the plungers. Clean the plungers, noting that the Hold plunger has a small ball loosely placed inside it, and check the orifice in by-pass plunger. This orifice is only 0·020 in. (0·5 mm) in diameter and if blocked will not allow the system to lift. Clean the orifice with an air blast; as the orifice is in a soft alloy washer, do not use a wire probe.

With both valve plungers removed, start engine and run at low speed, allowing the oil to flush out the control valve body. Stop the engine and replace plungers, ensuring that these are clean and replacing the steel ball in the Hold valve plunger. This ball is just held loosely inside the spring and if not replaced will cause erratic TCU pressure during operation. Do not fully tighten the two plugs but leave unscrewed a few turns and start the engine. Place control lever in the lift position and allow air to bleed through the plug vent holes. When air-free oil is forced out of the vent holes, stop the engine and fully tighten plugs.

If flushing out the system corrects the fault but it subsequently recurs, the oil is dirty, probably due to dirt introduced into the system during oil changing or topping up. If this occurs, flush the system, drain the oil, clean the gauze and magnetic filter, replace the by-pass filter element and finally refill with new oil.

Failure to Hold

Place the dial pointer in the TCU/Ext. position, so that any defects in the sensing unit or cable will not affect the operation, and release the quadrant spring retaining nut. Move the control lever fully rearwards, allowing the quadrant spring to be moved rearwards and then compressed. When the linkage reaches full height the pump relief valve will make a screaming sound as it relieves excess pressure and when this sound is heard move the lever slowly forward until the "screaming" stops: this is then the Hold position for the control lever and the linkage should hold stationary. If the linkages remain stationary, move the spring carrier forward in its slot until it touches the control lever then tighten the nut. Moving the lever rearwards so that it compresses the quadrant spring should then cause the pump relief valve to operate, but when the lever is released the spring should push the lever forward and put the relief valve out of action. If the spring pushes the lever too far forward and allows the linkage to fall, or if difficulty is experienced in finding the correct position for the spring, check that the lever pivot tension is correct. The lever should be free to move but have sufficient drag to hold it in any position and can be adjusted by repositioning the locknuts on the pivot shaft.

If the linkage starts to lower immediately the control lever is moved far enough forward to stop the pump relief valve from operating, the system is losing oil and, after removing all dirt from the

adjacent area, remove the cover plate from the top right-hand side of the rear axle case. When the cover is removed the top of the control valve assembly can be observed and any leakage from the plunger sealing washers or hold relief valve can be seen.

If no leakage can be observed from the control valve, remove the plug from over the Hold valve and withdraw the plunger by inserting a clean piece of ½ in. (12 mm) wood dowel into the plunger. Replace the plunger after cleaning and check that it is quite free in its bore. Replace the small steel ball in the plunger; this is located loosely in the plunger and if omitted will cause erratic TCU operation. Replace the spring and plug, start the engine and unscrew both plugs two or three turns, to remove any air. Stop the engine after a few minutes and firmly tighten both plugs.

If cleaning the Hold valve does not rectify the fault the leakage is either in the control valve, pipes, connections or ram cylinder and the system will have to be dismantled and rechecked.

Unsatisfactory Depth Control

If the system lifts, holds and lowers when in TCU/Ext. but gives unsatisfactory results when in Depth control the cable should first be checked by disconnecting the inner cable and gripping the nipple with pliers. If the inner cable is pulled outwards and then released, the spring inside the ramshaft bracket should return the cable to its original position. If the cable does not return when pulled outwards the sensing unit cannot operate the control mechanisms and the cable must be removed and freed. (See Page 34.)

If the cable operates freely reconnect and adjust, as described on Page 21, then check the sensing unit. This can be done by attaching a plough on the linkage, selecting Depth and raising the plough. If a suitable support, such as a jack, oil drum, etc., is then placed below the rear landside and the plough is lowered very slowly, the tension in the sensing unit will be changed to compression. The movement in the sensing unit can then be observed and if the unit is operating correctly the linkage will lower until the rear of the plough rests on the support and then remain stationary as the sensing unit operates the control mechanism. Moving the control lever a short distance down, or up, the quadrant from this position should then slightly lower, or raise, the lower links until the change in compression in the sensing unit operates the control mechanism and holds the links stationary in the new position. Under this condition the lower links should act in the same manner as when in Height control, a small movement of the control lever giving a corresponding movement of the lower links. If the links fail to operate in this manner or operate very erratically the sensing unit is not operating freely and should be removed and stripped (see Page 34). If the control lever allows the links to be moved up and down whilst the rear of the plough is resting on the support, the sensing unit is operating correctly and any fault is probably due to an outside cause, such as incorrectly set implement, etc.

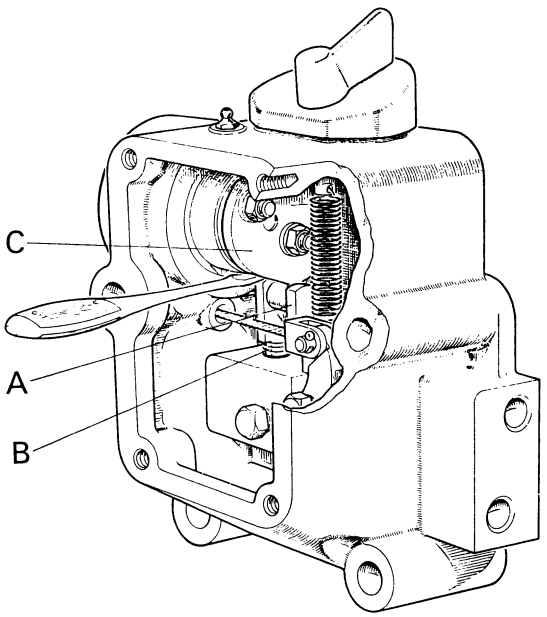

Figure 23. CHECKING HEIGHT CONTROL PUSH ROD

A. Push rod B. Return spring C. Ramshaft cam

Unsatisfactory Height Control

If the system lifts, holds and lowers when in TCU/Ext. but does not operate satisfactorily when in Height control, lower the linkage and remove the cover from the right-hand ramshaft bracket. Insert a suitable lever, such as a large screwdriver, under the end of the ramshaft and lever the push rod down against its spring. The push rod must be quite free and return against the cam when released. With dial pointer in Height, check that the rocker arm is under the push rod so that when the push rod is levered down it operates the rocker arm.

Lift the linkage by hand and engage the locking latch; check that the cam plate has turned with the ramshaft and the push rod is in the cam indentation. If not, release the two nuts and reposition the cam plate (see Page 19).

If the system does not then operate correctly the fault is probably due to dirt in the control valve. The valve plungers should therefore be removed and the system flushed as described on Page 14.

FAULT-FINDING CHART

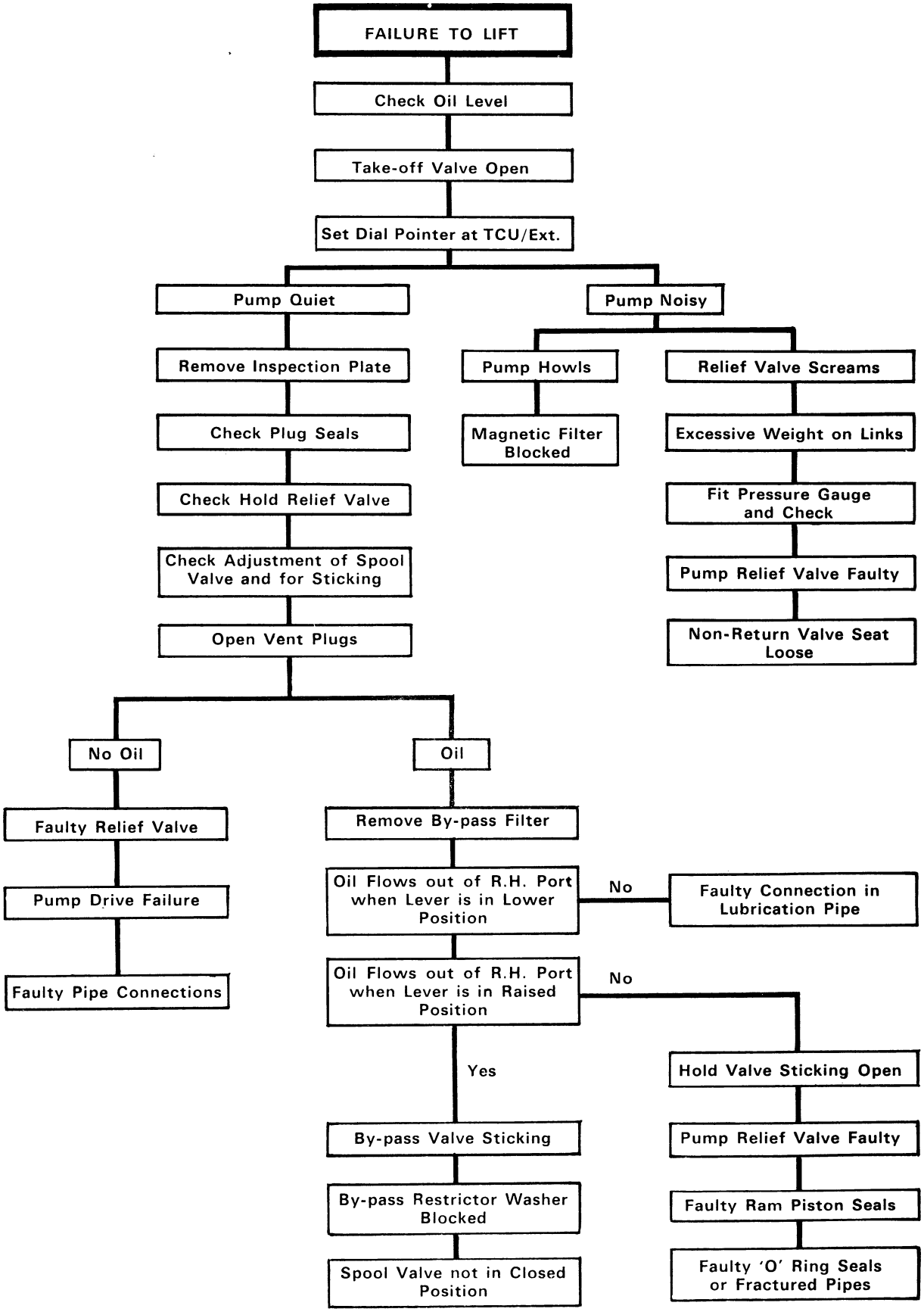

FAULT-FINDING CHART

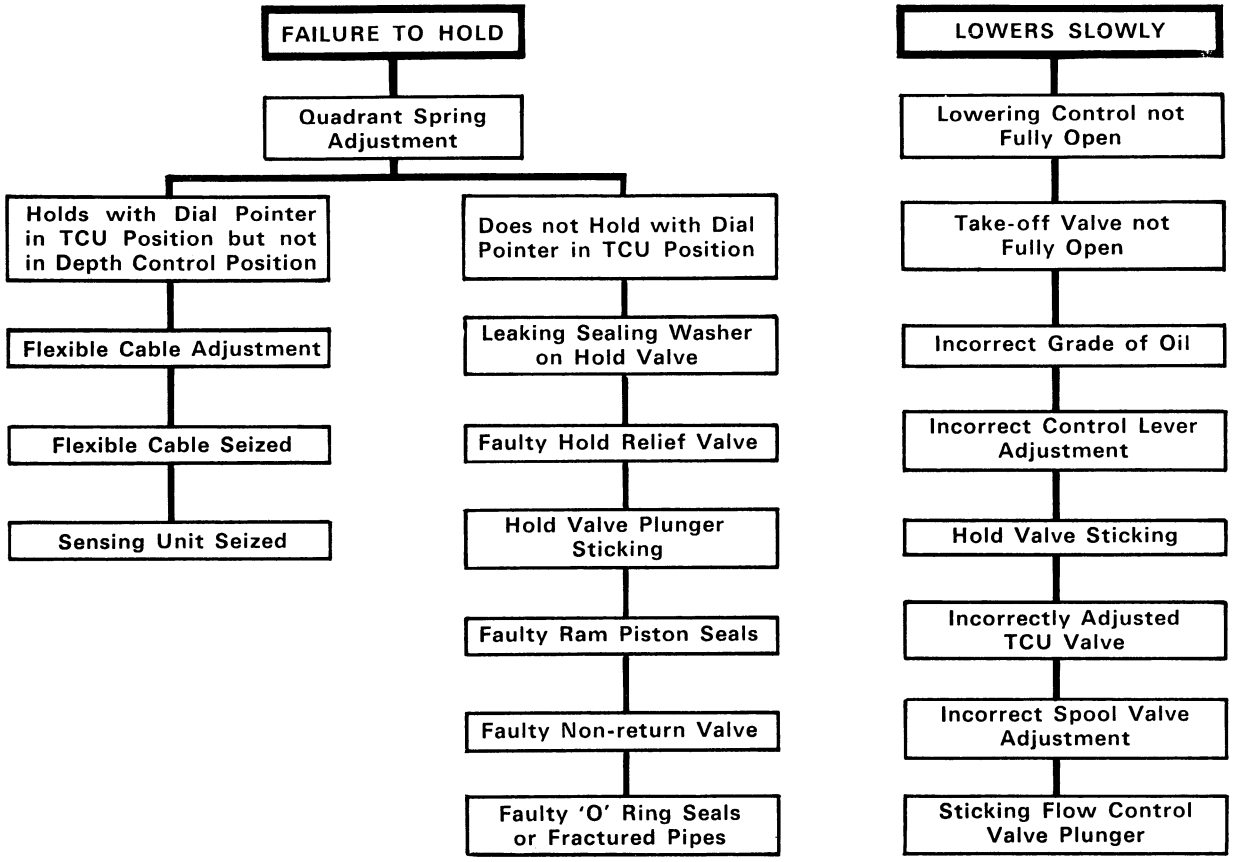

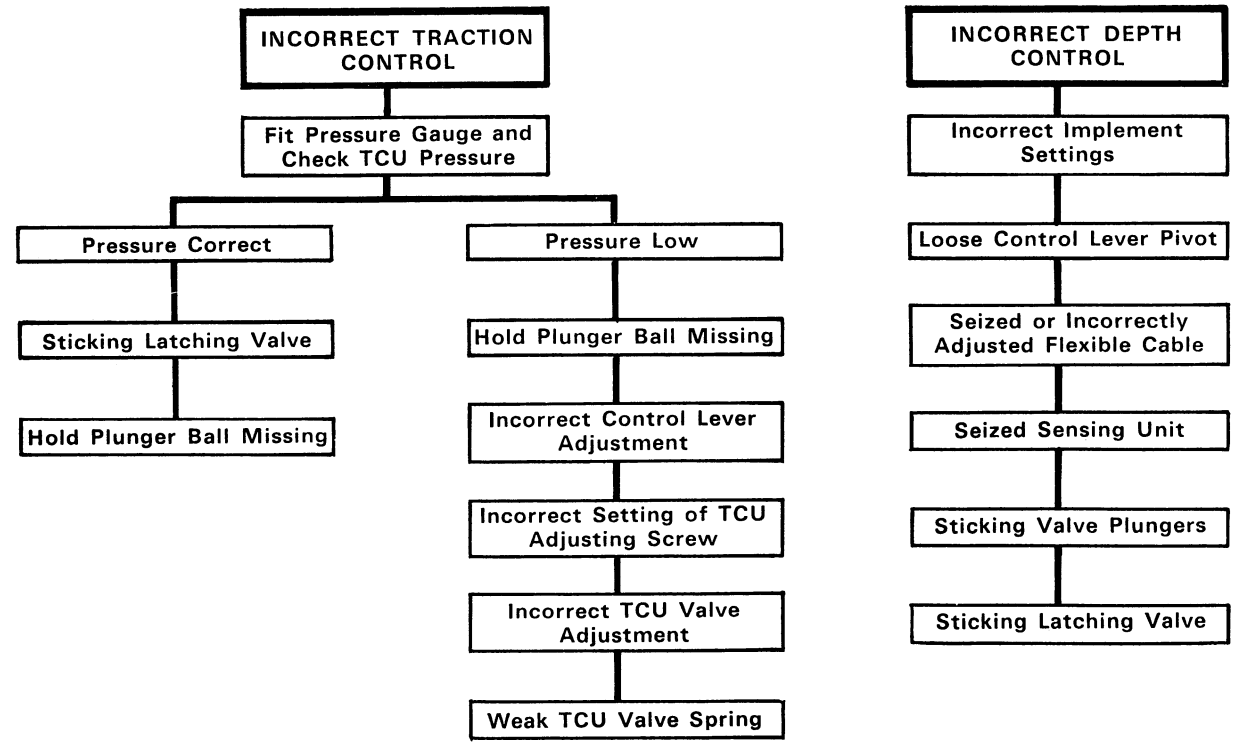

ADJUSTMENTS

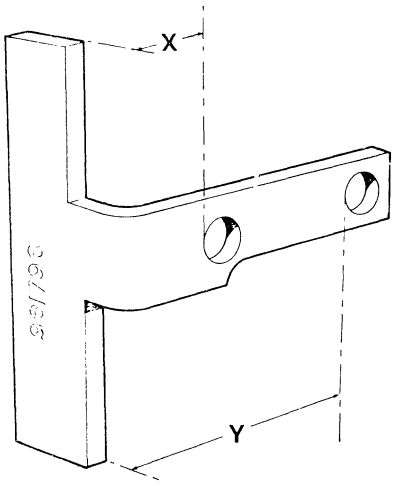

X = 0 437 in.(11·1mm)
Y = 1 580in.(40 1mm)

Figure 24. SERVICE TOOL 961796

The settings and adjustments required on the Selectamatic system may be divided into two groups.

The first group (Nos. 1 and 2) are bench settings and are only required when a control valve is fitted to a ramshaft bracket.

The second group (Nos. 3 to 7) are tractor settings and must be carried out whenever any dismantling is done which disturbs the original settings.

ONE

After bolting valve assembly on to ramshaft bracket, place the dial pointer in the TCU/Ext. position. Engage the inner hole of the setting gauge A on the rocker shaft pin B and hold the gauge against face of the bracket spigot C. With abutment plate D firmly bolted in position and touching the underside of rocker lever E, check the clearance between the rocker lever and spool valve F; this should be 0·001 to 0·003 in. (0·025 to 0·075 mm). If the clearance is incorrect remove the abutment plate and add or remove shims as required. Ensure the abutment plate seats correctly when refitted and after firmly tightening the retaining bolt, recheck the clearance. (Fig. 25).

TWO

With the dial pointer in the TCU/Ext. position, engage the outer hole of the setting gauge A on the rocker shaft pin B and hold the gauge against face of the bracket spigot C. After releasing the locknut tighten adjusting screw G until it just touches the TCU valve H, but does not compress the spring, then screw **in** a further **complete turn** on 990 and 880

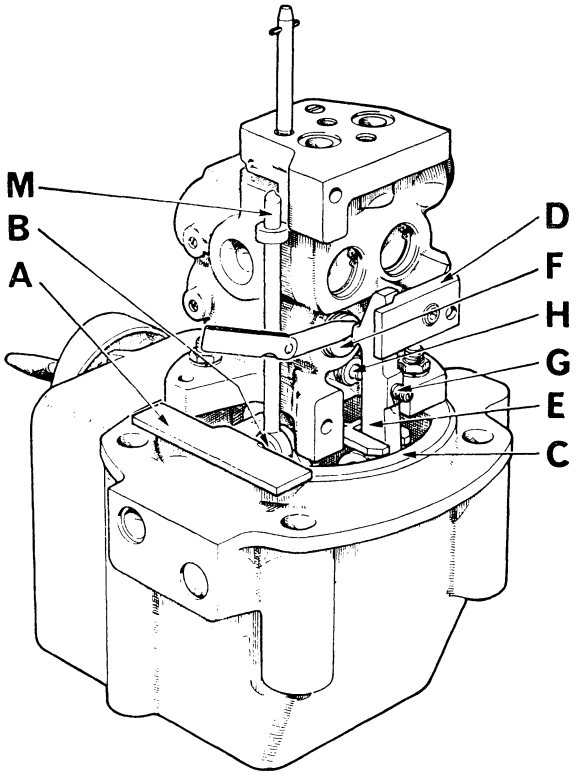

Figure 25. SETTING THE ABUTMENT PLATE

A. Setting gauge (961796)
B. Rocker shaft
C. Bracket face
D. Abutment plate
E. Rocker lever
F. Spool valve
G. TCU screw
H. TCU valve
M. Connecting link

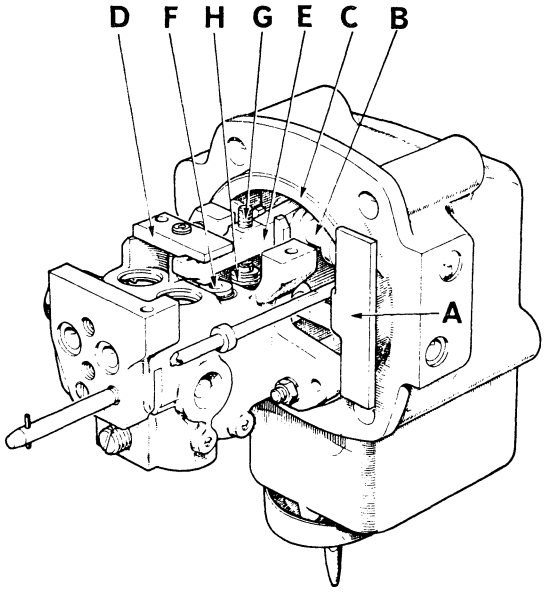

Figure 26. SETTING THE TCU VALVE SCREW

A. Setting gauge (961796)
B. Rocker shaft
C. Bracket face
D. Abutment block
E. Rocker lever
F. Spool valve
G Adjusting screw

tractors, or **one-and-a-quarter turns** on 770 tractors, then firmly tighten the locknut. As the point at which the ball valve just touches its seat is not easy to determine, this setting should be done with the valve inverted and a 0·002 in. (0·05 mm) feeler gauge inserted between the plunger and screw. The adjusting screw can then be screwed inwards until it begins to hold the feeler gauge, then the gauge withdrawn and the adjusting screw screwed in further as required. (Fig. 26).

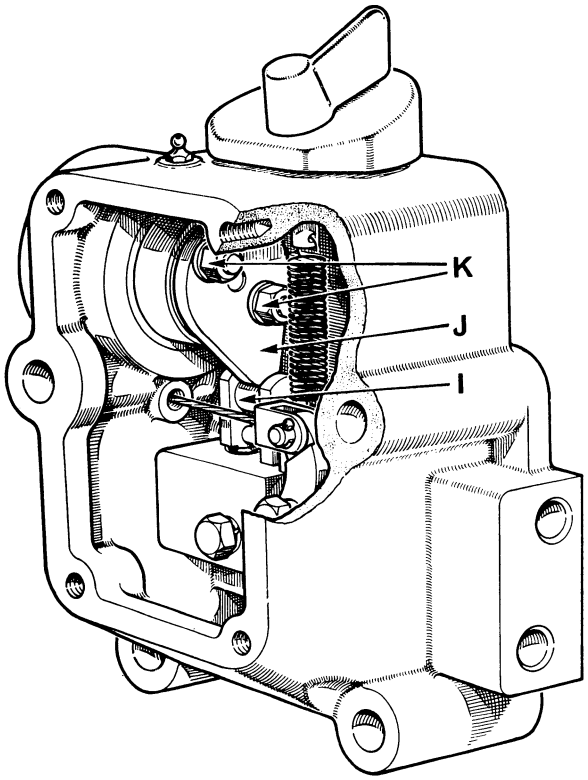

Figure 27. SETTING THE RAMSHAFT CAM

J. Cam K. Retaining nuts I. Push rod roller

THREE

Remove cover plate from right-hand ramshaft bracket. Lift the linkage by hand and engage the locking latch. With linkage supported on the latch, check that the push rod roller I is seated in the cam indentation J. If the cam is not in this position, release the two nuts K and turn the cam, by inserting a suitable lever under the end of ramshaft and holding the push rod down against its spring until the roller engages on the cam indentation, then retighten the clamp nuts and replace cover plate. (Fig. 27).

(Note: This setting is not required on 770 tractors up to Serial No. 583396).

FOUR

Disengage lift latch, lower the linkage and remove cover plate from top of the axle case. Remove

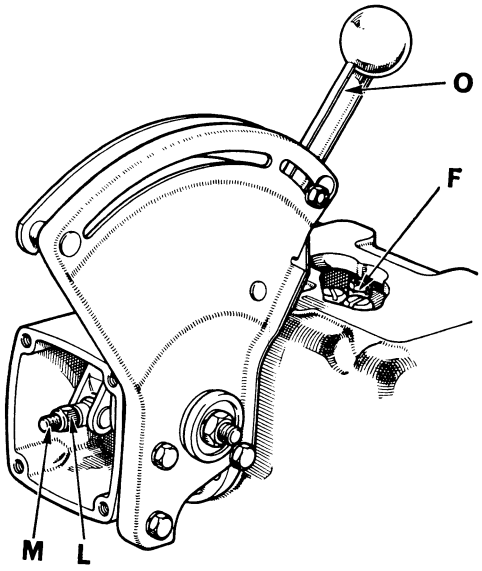

FIGURE 28. SETTING THE CONNECTING LINK NUT

F. Spool valve L. Connecting link nut
M. Connecting link O. Control lever

cover from front of control lever housing and unscrew the Nyloc nut L until it is level with the end of the connecting link M. Release the spring carrier nut and slide carrier to the rear of quadrant slot. Place a small spanner between the control lever and rear finger guide, then move the finger guide rearwards until the control lever is pushed into the Select position and tighten the finger guide clamp nut to hold the control lever in position. Rest a finger on top of the spool valve F and with the control lever held in the Select position, flick selector knob from TCU/Ext. to Height and back to TCU/Ext. a few times. Flicking the selector knob in this manner will cause the spool valve to lift and when this movement can be felt — and it is useless to proceed until movement of the spool valve has been established — tighten the nut L further on to the connecting rod. Recheck spool valve movement after each turn of the nut, noting that the amount of valve movement will reduce as the nut is tightened. Continue tightening the nut until the point is reached where **spool valve movement just ceases.** As it is important to tighten the nut only to the point where valve movement ceases and not past this point, take extra care when reaching this position. Check the valve movement more frequently and do not confuse a slight kick of the valve with actual movement. If in doubt, unscrew the nut a little and try again.

Later tractors have a plug at the rear of the axle cover plate to enable spool valve movement to be checked with a dial gauge. If the plug is removed and a dial gauge mounted so that its finger passes through the hole and rests on top of the spool, valve movement will be shown when the dial pointer is flicked from TCU/Ext. to Height and enable the nut L to be tightened until movement just ceases. Do not confuse a slight kick of the needle with actual movement: if the needle kicks but returns to its original position the valve is not actually moving.

When the nut has been set correctly, replace control lever housing cover, ensuring that the lowering control knob is turned so that the spindle slot engages with the needle valve peg. (Fig. 28).

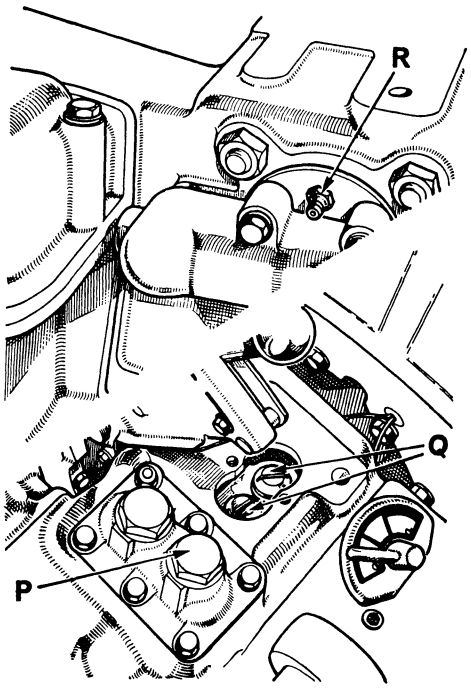

Figure 29. VENTING THE HYDRAULIC SYSTEM

P. Axle cover plug (880/990 Tractors only)
Q. Control valve plugs
R. Ram cylinder vent screw

FIVE

Start engine and vent the system by first releasing the plug P on the axle cover and placing lift lever in the Select position until air is removed and only oil is expelled. Repeat this procedure with the two plugs Q on the control valve; unscrew both plugs about two turns and place the control lever in the Select position until air-free oil is expelled. Move control lever forward, to make the pump inoperative, before firmly retightening the plugs; otherwise the pressure may prevent the washers from seating correctly and cause leakage later. Replace inspection cover on top of the axle case and remove air from ram cylinder by opening vent screw R and venting in the same manner as previously. (Fig. 29).

(Note: 770 tractors do not incorporate the axle cover venting point P, and venting is therefore only required from points Q and R).

SIX

Check the movement of control lever O; it should be free to move but not so slack that it can be moved by vibration. If necessary adjust the pivot tension by tightening, or releasing, the locknuts U on the lever pivot shaft.

Place the control lever in the Select position

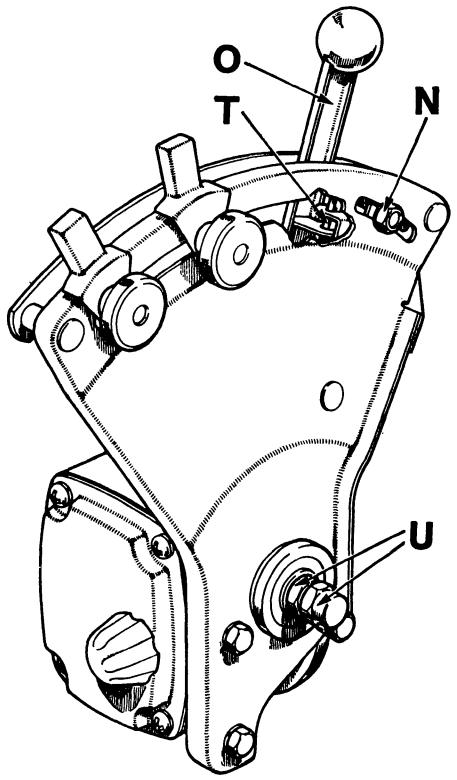

Figure 30. SETTING THE QUADRANT SPRING

N. Spring carrier nut
T. Spring
O. Control lever
U. Control lever pivot nuts

and turn selector knob into the Height position. Start the engine, allow linkage to raise and engage the locking latch. When the linkage reaches full height the pump relief valve will open and make a "screaming" sound. When this occurs move the control lever slowly forward until the "screaming" stops, then release the spring carrier nut N and move the spring carrier forward in its slot until it touches, but does not move the control lever, and tighten the nut. As overheating of the oil and premature wear of the pump will take place if pump relief valve is in continuous operation, ensure that the valve only operates when control lever is held against the spring and does not operate when the lever is released. If necessary make a slight adjustment to the spring carrier before finally tightening the clamp nut. (Fig. 30).

SEVEN

(Single-acting sensing unit — 770 Tractors to Serial No. 583396)

Place selector knob in the Depth control position and attach an implement to the linkage. After releasing the locknut, screw the cable adjuster S fully inwards, to ensure that there is slackness in the cable. Move control lever O rearward until it touches the quadrant spring and start the engine. Allow linkage to rise to full height and reach the Hold position, then stop the engine. With control lever touching quadrant spring T, screw the adjuster

S outwards until the linkage commences to creep down then screw the adjuster **inwards one-and-a-half turns** and hold the adjuster stationary whilst tightening the locknut. (Fig. 31).

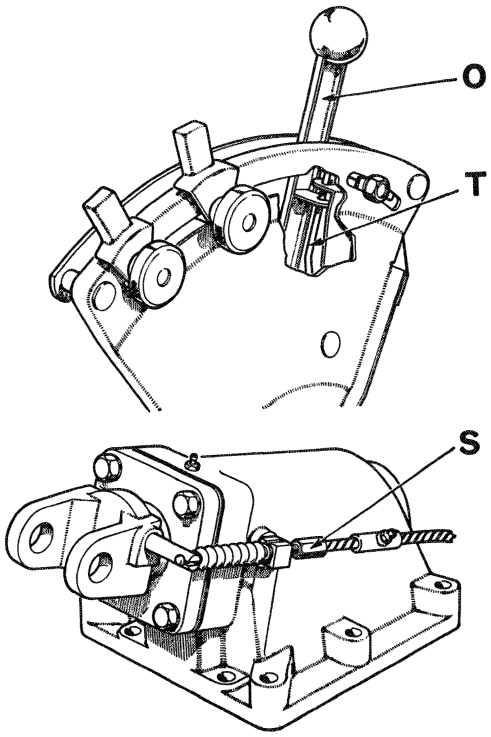

Figure 31. SETTING THE SENSING UNIT CABLE

O. Control lever **S.** Cable adjuster **T.** Spring

If insufficient control lever movement is obtained when shallow ploughing, this setting should be increased to **two-and-a-half turns.**

(Double-acting sensing unit — except 770 Tractors to Serial No. 583396)

For this setting it is necessary to have weight on the lower links but the top link disconnected, so that no compression or tension load is applied to the response unit. This condition may be achieved in a number of ways; a bar across the link-ends so that a weight can be supported is ideal, but a plough can be used if it is first lifted normally, a support placed under the rear landside and then slowly lowered until the top link can be disconnected (placing the selector knob in Height control will enable this operation to be carried out quite easily).

With weight on the lower links and the top link disconnected, place selector knob in the Depth control position. After releasing the locknut, screw the cable adjuster S fully inwards to ensure that there is slackness in the cable. Move control lever O rearwards until it touches the quadrant spring and start the engine. Allow linkage to rise to full height and reach the Hold position then stop the engine. With control lever touching quadrant spring T, screw the adjuster S outwards until the linkage commences to creep down then screw the adjuster **inwards** nine-and-a-quarter turns on 770 and 880 tractors or five-and-a-quarter turns on 990 tractors and hold the adjuster stationary whilst tightening the locknut (Fig 31).

HYDRAULIC PUMP

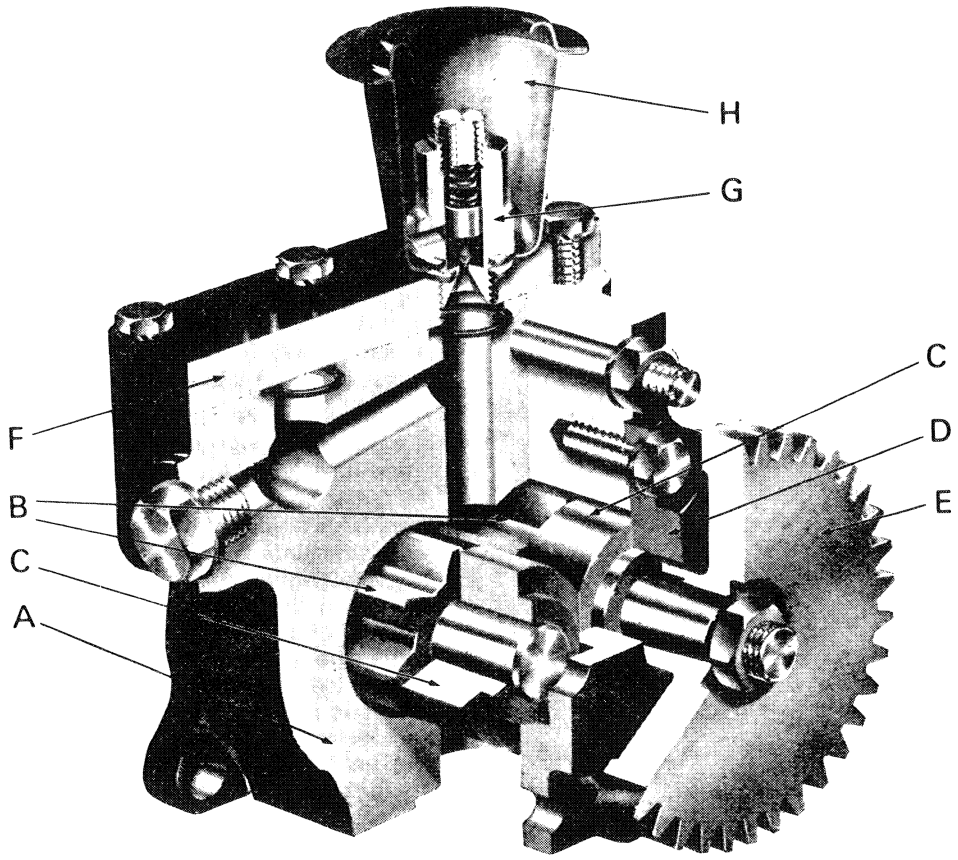

Figure 32. HYDRAULIC PUMP

A.	Body	B.	Rotors	C.	Bushes	D.	Side cover
E.	Driving gear	F.	Top cover	G.	Relief valve	H.	Shroud

The hydraulic pump consists of a body A which houses the two rotors B. The rotors are supported in bushes which not only provide bearings for the rotor shafts but also seal the side faces of the rotors against oil leakage. Most of the leakage which takes place in rotor type pumps is through the clearance between rotor side faces and the shaft bushes. The bushes are therefore pressure-loaded by feeding oil from the outlet side of pump into the annular space between the inner bushes and pump body. These spaces are sealed by 'O' rings and as the bush area under pressure in the space is slightly greater than the area under pressure between the rotors, the pressure in the space will push the bushes against the rotors. The complete rotor and bush assembly will therefore be pressed against the body side cover at all output pressures and leakage between the rotor side faces reduced to a minimum.

The pump outlet point is in the rear of pump body; the pipe to the control valve passes through the pump support plate and is sealed by an 'O' ring in a groove on the end of the pipe.

The cover plate F is bolted on top of pump body and is fitted with a pressure relief valve which limits pump output pressure and prevents the pump from being overloaded if excessive weight is placed on the linkage, or attachment. The shroud round the relief valve maintains a bath of oil and prevents the oil from becoming aerated, as would occur if the oil was discharged openly through the small holes at high pressure.

Checking the Pump

On 880 and 990 tractors the pump can be checked by removing the rear axle cover plate 917127 and sealing the pump outlet by fitting a blanking plug, Service Tool 961977, in the end of the rear pipe (Fig. 33). If the cover is then refitted and a pressure gauge connected to the cover outlet port oil will be unable to flow into the control valve and pressure should build up until the pump relief valve opens.

Caution: It is important that this test is carried out with the engine running at idling speed only and with the transmission oil temperature above 75° F (24° C). If the pressure obtained is insufficient to open the pump relief valve, and this can be observed if the sensing unit is removed, the lack of pressure is due to failure of the sump outlet pipe 'O' ring, a fractured pipe or a worn pump.

support plate and axle case. Fit a new 'O' ring on to the outlet pipe connection and ensure that this is not displaced when the pump is pushed into position.

Caution: When pushing the pump into position do not tap the shaft end or gear as this will push the rotor teeth into the softer bushes and ruin the pump.

When refitting PTO unit, clean the plate and

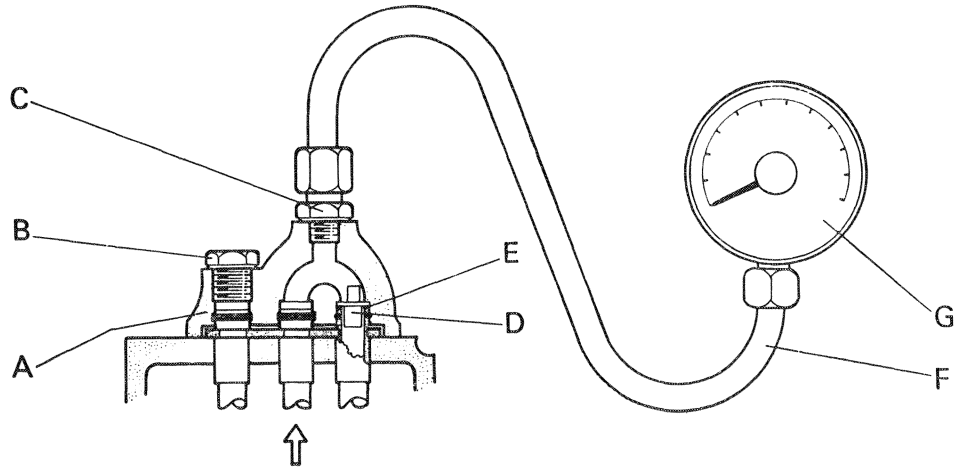

Figure 33. CHECKING THE OIL PUMP PRESSURE — 880/990 TRACTORS

A. Axle connection plate
B. Plug
C. Union (¾ UNF)
D. Blanking plug (961977)
E. 'O' ring (24554)
F. Connecting pipe (84522)
G. Gauge (60984 or 960985)

Pump Removal and Replacement

Before starting to remove the hydraulic pump it is essential that all dirt is removed from the sensing unit, power take-off and rear axle.

The pump is positioned inside the power take-off housing and to gain access to the pump it is therefore necessary to drain the transmission oil and remove the power take-off unit. As the pump is gear driven from the power take-off driving shaft, both the driving gear and idler gear will be removed with the PTO unit.

Removing the power take-off unit will expose the pump, which is mounted on a support plate clamped between the rear axle and PTO case. To remove the pump assembly from support plate, remove the two setscrews and nut, then withdraw the pump horizontally. As the pump body is dowelled to the support plate it will probably be necessary to carefully lever the pump away from the backplate.

To remove pump support plate, first remove the clamp plate and 'O' ring from pump outlet pipe, then remove the setscrew from top of support plate. The support plate can then be withdrawn, leaving the pipe in the axle case. Do not force support plate away from the axle; if it does not come away easily check that the pipe connection is not binding in the plate hole.

Replace support plate and pump in the reverse order of removal, fitting a new gasket between the axle casing faces, smear the new gasket with grease and place in position on the support plate. As the unit must be replaced horizontally, in order to engage the input shaft splines into the coupling and to mesh the pump drive gears, two guide studs will help to hold the unit in position. These studs should be approximately 3 in. (8 cm) long, threaded $\frac{7}{16}$ UNC

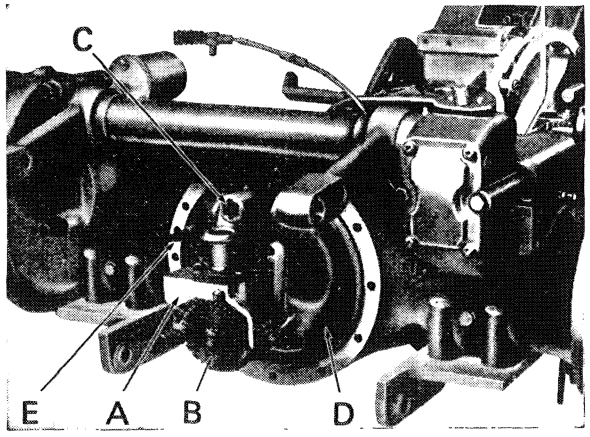

Figure 34. REAR AXLE WITH PTO UNIT REMOVED

A. Hydraulic pump
B. Pump drive gear
C. PTO driving shaft
D. Pump support plate
E. PTO oil feed pipe

at one end and a screwdriver slot in the other end. Screw the studs into the axle case at two opposite points and slide the unit into position. Engage high PTO ratio and turn the PTO output shaft to engage the drive splines into the driving shaft coupling and to ensure meshing of the pump drive gears. Do not use force to push the unit into position; if the unit will not go "fully home" this will probably be due to the pump drive gears not being meshed and turning the engine will turn the gears and allow the teeth to slide into engagement. Unscrew the guide studs and fit the retaining bolts. Refill the transmission with oil.

Pump Relief Valve

The pump relief valve is mounted on the pump cover plate and is accessible when the PTO unit is removed. The valve is set and sealed during assembly and no attempt should be made to strip or adjust the valve. If a pressure test shows the valve is opening before full pressure is reached a new, pre-set, assembly should be fitted.

Stripping the Pump

Remove the nut from the end of rotor shaft and draw the gear off the shaft taper, using a suitable extractor. Do not attempt to remove the gear by hammering the end of rotor shaft as this will push the rotor teeth into the softer bushes and ruin the pump.

Remove the five bolts attaching the top cover, noting that the bolts are not all the same length. Remove cover from pump body, discarding the two 'O' rings. If necessary the relief valve can be unscrewed from the top cover, using a suitable box spanner.

Remove the eight bolts attaching the end-plate to the pump body, noting that the bolts are not all the same length, and withdraw the end-plate. Extract the rotors and bushes from body; these should slide out freely but if tight, invert the body and tap on a wooden block until they are shaken free. Note the location of the bushes so that they can be refitted in the same relative positions when assembled. The two inner rotor bushes should be removed and the 'O' rings discarded. As it is essential that these bushes are free to slide in the body, in order that the pressure balancing can be obtained, the inner bushes should be removed and new 'O' rings fitted.

Assembling the Pump

After thoroughly cleaning all parts, lay them on a clean bench. If more than one pump is being stripped at the same time take care to segregate the parts of each pump, so that they are not interchanged.

Examine the inside of pump body, particularly on the inlet side. The tips of the rotors touch the body on this side and will produce a witness mark in this area. If excessive wear takes place in the bushes the witness mark will deepen into a wear track, causing a step in the bore. Bodies are not supplied separately as it is more economical to obtain a complete assembly than to assemble a new body and rotor pack. If the wear track is not very deep the body is serviceable but any burr caused by the rotor teeth should be carefully removed with a scraper so that it will not interfere with the bush balancing action.

Examine the rotors for tooth damage and excessive scoring of the journals. Check that the tooth contact marks are evenly distributed across the flanks of the teeth. Reject any rotors with badly scored journals. Rotors are matched so that their widths are equal to within 0·0002 in. (0·005 mm) and can only therefore be renewed as a pair.

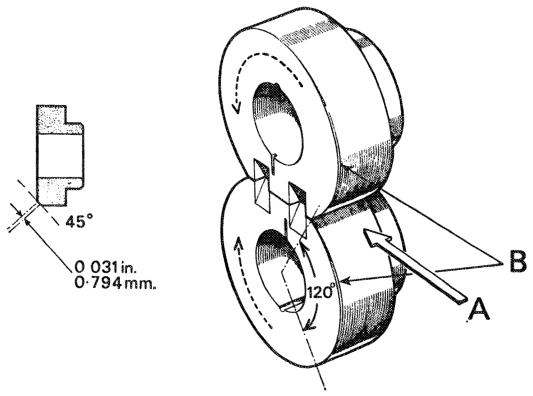

Figure 35. CHAMFERING THE INNER ROTOR BUSHES

A. Oil inlet side of rotors
B. Chamfer, 45° and 0·031 in. (0·794 mm) wide tapering to zero at 120°

Examine the bush faces and bores for signs of scoring or wear and renew if required. The bushes are paired so that the lengths of the major diameters are equal to within 0·0002 in. (0·005 mm) and can only, therefore, be renewed in pairs. A set of four bushes should normally be fitted but inner and outer pairs of bushes are available for replacing bushes that are only scored or become damaged. The two inner bushes should be modified by chamfering the edge on the low pressure side, as shown in Fig. 35. This will allow the bushes to override any further burr which may be subsequently thrown up by the rotor teeth and thus prevent any interference with the balancing action of the bushes.

Having examined all parts and obtained replacements for those rejected, smear the 'O' rings with good quality grease and fit on to the bushes. The tails of the inner bushes are a smaller diameter than the tails of the outer bushes and cannot, therefore, be fitted in the wrong position.

On later type pumps the bush tails are not concentric with the bush bores but are offset towards the inlet side, so that the pressure loading is lower on the inlet (low pressure) side and higher on the outlet (high pressure) side of the bushes. The pressure balancing is therefore more uniform, but it is essential that bushes are correctly fitted otherwise the pump will be incapable of reaching its full output pressure. (Fig. 36.)

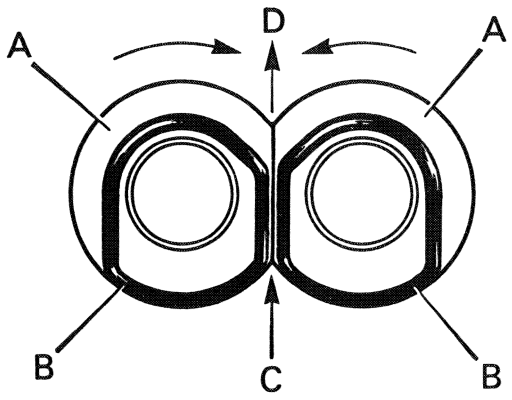

Figure 36. ROTOR BUSHES (later type pump only)

A. Bushes
B. 'O' rings
C. Inlet side of pump
D. Outlet side of pump

Apply a small quantity of clean oil into the pump body and fit the two bushes into their respective bores. The bushes should slide into position quite freely until the 'O' rings come up against the body shoulder. Apply clean oil on to the rotor journals before fitting the rotors into the pump body. Fit the outer bushes into the pump body, replacing them in their original positions, and then place the body side cover in position and check the cover-to-body clearance. With the cover resting on the bushes the clearance between the cover and body faces should be not less than 0·015 in. (0·38 mm), otherwise the 'O' rings on the bushes will not be clamped tight enough to make a seal and the pump will be incapable of producing full pressure.

Replace the cover bolts, noting that two of the bolts are shorter for use where the cover section is thinner. Tighten the cover bolts by diagonal selection to 40 lb ft (6·25 kg metres). Do not over-tighten the bolts as the body is soft alloy.

Replace the shaft key and gear, followed by the lockwasher and nut. Do not tap the gear on to the shaft unless the opposite end of the shaft is supported on a peg passing through the hole in the body, otherwise the rotor teeth will damage the softer bushes. Tighten the shaft nut to 45 lb ft (7·12 kg metres) then lock with the tabwasher. Check that the pump can be turned by hand: the rotors should have a steady drag without any roughness or very tight spots.

Refit top cover, fitting new 'O' rings and noting that the two longer bolts are fitted adjacent to the body plug. Tighten the bolts to 25 lb ft (3·5 kg metres) and refit the relief valve, noting that a sealing washer should be fitted on each side of the shroud.

If the pump is not for immediate use, seal the inlet and outlet points to prevent any dirt entering the pump.

CONTROL VALVE ASSEMBLY

The control valve assembly is housed inside the rear axle casing and is attached to the front of the right-hand ramshaft bracket. The assembly contains eight separate valves and is manufactured to extremely fine limits. It is not therefore possible to replace any of the four main valves, and if any of these become unserviceable a new assembly must be fitted. Incorrect operation of the valve is, however, usually due to dirt in the system and the assembly can be stripped, cleaned and reassembled if this occurs. **If adequate precautions are taken to prevent dirt entering the hydraulic system, the control valve assembly will give long and trouble-free service.**

Before starting to remove the control valve, first clean all dirt from the control lever housing, ramshaft and rear axle case.

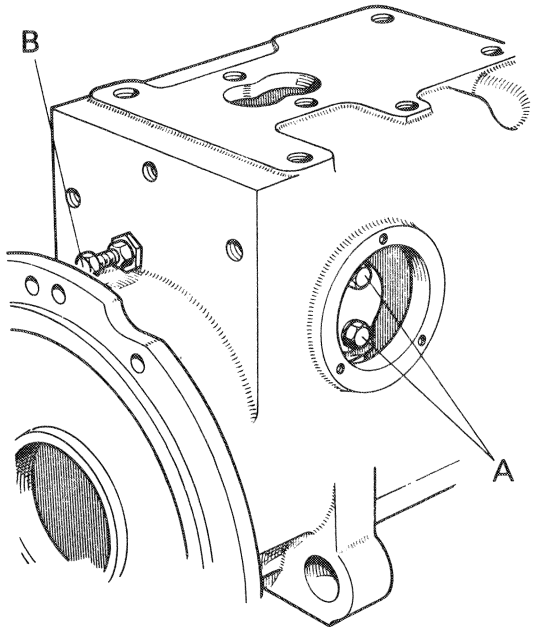

Figure 37. CONTROL VALVE PIPE CONNECTIONS

A. High-pressure pipe bolts
B. Lubrication pipe clamp bolt

Removing and Refitting Control Valve Assembly

Remove cover from control lever housing. This is attached by four screws and must be removed complete with the lowering control knob. Remove Nyloc nut from the end of connecting link and remove the three bolts attaching the housing to rear axle case. Two bolts are positioned inside the housing but the third is outside the housing and it may be necessary to release the three quadrant bolts to provide sufficient clearance to remove this bolt. On 990 and 880 tractors the handbrake lever is supported in the control lever housing and it is, therefore, necessary to disconnect the brake linkage from the lower end of the hand lever. Withdraw housing from axle case, noting that a distance piece and spring are fitted on the connecting link.

Removing control lever housing will expose the control valve pressure pipe connection and enable the two attaching bolts to be removed, so that when the control valve is withdrawn rearwards the pipe connection will remain in position.

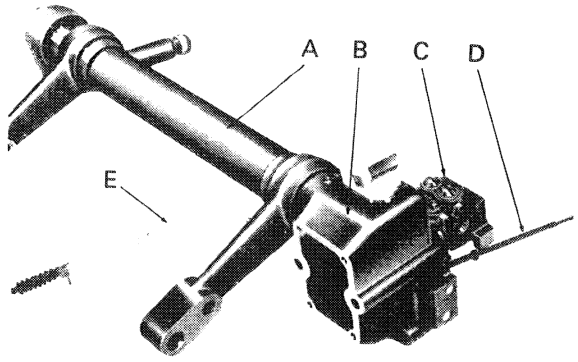

Figure 38. RAMSHAFT AND RIGHT-HAND BRACKET

A. Ramshaft
B. Right-hand ramshaft bracket
C. Control valve assembly
D. Control lever connecting link
E. Sensing unit cable

Release locknut on the lubrication pipe clamp bolt and unscrew the bolt. Hold the bolt with one spanner whilst releasing the locknut with a second spanner then unscrew the bolt nine complete turns. This will give sufficient clearance for the pipe to clear the control valve but will not allow the pipe to move so far that it will come out of the connection at its inner end and fall into the axle case.

Disconnect flexible cable from sensing unit, then remove sensing unit. Cover the top of power take-off case with a piece of cardboard after removing sensing unit to prevent any dirt entering power take-off unit. Disconnect levelling and lift levers from lower links and remove the cover from right-hand ramshaft bracket. Remove the six bolts from ram cylinder cover, noting that the two bolts in the centre pass right through the axle case, and remove ram cylinder cover: this will allow a small quantity of oil to escape and a container of approximately 2 pints (1 litre) capacity should be positioned under the cover when the joint is "broken". Remove the four bolts attaching right-hand ramshaft bracket to axle case and, whilst supporting the weight of the ramshaft so that it remains level, withdraw the complete ramshaft and bracket assembly from axle case. On 770 tractors it will be necessary to release the right-hand mudguard bolts in order to allow the ramshaft to pass the mudguard. If the two long bolts are replaced in the ram cylinder after the cover is removed, these will provide a support for the left-hand end of ramshaft.

Place ramshaft and bracket on bench and remove control valve assembly from ramshaft bracket by removing the two nuts and bolt. As the bolt is fitted from inside the ramshaft bracket it is necessary to remove the push rod spring to gain access to the bolt head. The valve body is dowelled to the bracket and may, therefore, be initially tight.

Replace control valve in the reverse order of removal, taking care to position rocker lever between the abutment block and spool valve, and resetting the abutment block and TCU screw (see Page 18) after bolting the control valve on to ramshaft bracket. Fit new 'O' rings into the recesses in valve body, ensuring that these are not displaced as the valve is refitted into the axle case.

A new gasket should be fitted between the ramshaft bracket and axle case but the ram cylinder cover is a faced joint and only requires a film of jointing compound. Place the ramshaft bush so that the oil hole is opposite the grease nipple in the cover and smear the sealing disc with jointing compound before placing in position and tightening cover bolts.

As the inner end of valve low-pressure pipe is only inserted and not secured, check that the pipe has not been displaced, then tighten the clamp bolt — just tight enough to prevent the pipe being moved with the fingers — before tightening the locknut.

The pipe is clamped against a conical port on the valve chest and it is important that it is correctly positioned, otherwise the transmission and PTO will be starved of oil. If the clamp bolt becomes tight before it reaches its original position — and this can be checked by using the position of the locknut as a guide — the pipe is not correctly seated and the clamp bolt should be released and the pipe re-positioned.

Screw the lowering control needle valve into position before attaching the high-pressure pipe connection on to valve chest as the needle cannot be replaced when the pipe connection is in position. Firmly tighten the two pipe connection bolts.

Ensure that the lowering control needle valve is screwed into the valve body and that the spring and distance piece are on the connecting link before refitting the control lever housing. The connecting link is drilled so that the spring and distance piece can be fitted and a split pin temporarily fitted through the hole to hold the spring compressed until the housing has been fitted. Extract the pin immediately after refitting, replace the second distance piece and Nyloc nut, then adjust the nut (see Page 19) before replacing the cover. To replace housing cover, turn lowering control knob so that the slot in shaft is opposite needle valve peg.

After completing the assembly, vent the system and adjust according to the instructions on Page 18.

Dismantling and Cleaning Control Valve

As mentioned previously, the main control valve plungers are matched-ground to their bores and cannot, therefore, be renewed. The valve assembly can, however, be stripped, cleaned and reassembled, and as the faulty operation is probably due to sticking caused by dirt, a valve should not be regarded as unserviceable unless it is found faulty during this examination.

After removing valve assembly from ramshaft bracket, remove the lowering control needle valve and abutment plate, noting the shims fitted between plate and valve body. Remove the two locknuts from spool valve and withdraw the spindle. **Do not attempt to remove the spool valve sleeve** as this cannot be replaced without special equipment for checking that it is correctly sealed. Remove the two plugs from top of valve body, lift out the springs and turn valve upside down so that the hold and by-pass plungers fall out; the small steel ball inside the hold valve plunger will also fall out when the valve is inverted. If the plungers do not fall out insert a piece of ½ in. (12 mm) wood dowel into the plungers so that they can be extracted. Remove relief valve plug and extract the spring, plunger, shims, seat and restrictor washer, taking care of the shims as these must all be refitted in order to maintain the original pressure setting. Remove the two plugs from left-hand side of body and extract the non-return and lowering control valve plungers. Remove plug from front of body and withdraw the latching valve; finally unscrew the ferrule from underneath and allow the TCU plunger, spring and ball to fall out. The valve is now stripped; the remaining plugs and seats are sealed in the body and must not be disturbed.

Wash valve body in clean paraffin and clean with an air blast. Do not use cloths as fibres may be left in the valve and cause trouble later. Clean all the components and check plungers to ensure that they are free to slide and rotate with light finger pressure. If there are any signs of sticking, the plungers may be lapped-in with metal polish or jeweller's rouge mixed to a paste with paraffin or light oil, to remove any high spots. **Grinding paste must not be used for lapping-in the plungers.** If the plungers or bores are scored, or any of the seat faces worn, the valve is unserviceable and should be replaced with a new assembly as plungers are matched-ground to their bores and cannot be supplied separately.

After thoroughly cleaning the valve chest and plungers, lay all the parts on a sheet of clean paper. Special care should be taken to ensure that the orifice in the by-pass plunger is clear; this orifice is only 0·020 in. (0·5 mm) diameter and must be cleaned with an air blast. Do not use a wire probe: this may damage the soft alloy washer and enlarge the orifice.

Commence reassembly by replacing the spool valve: fit the thrust spring on to the lower end of the spool, smear with clean oil and place in position. Push the spool against its spring, fit the flat washer and screw the two locknuts into position with the fingers; they will be adjusted later.

Smear the by-pass and Hold valve plungers and place in their respective bores. Place the small steel ball on the hold plunger, then replace the two springs, sealing washers and plugs. Ensure the

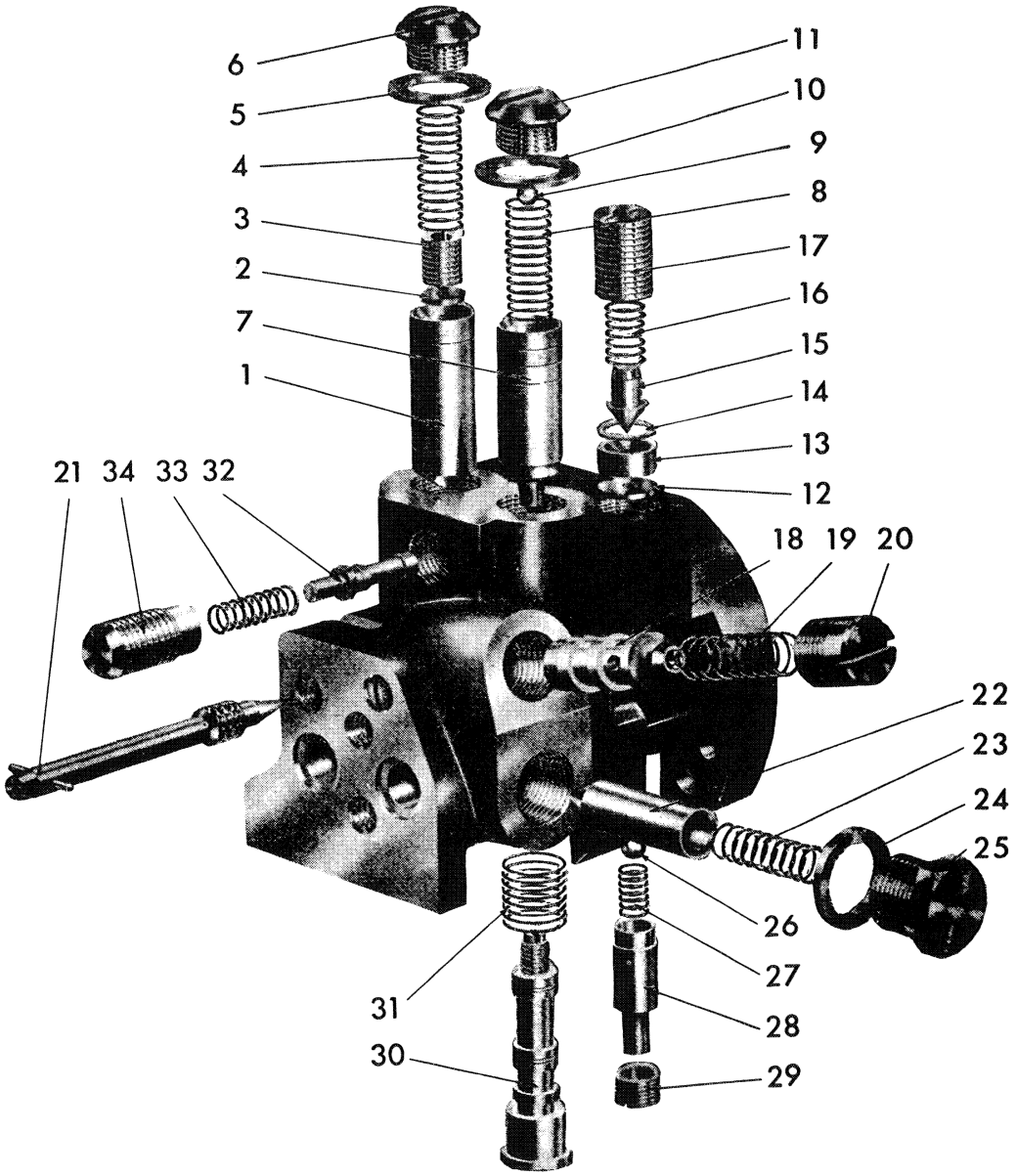

Figure 39. CONTROL VALVE ASSEMBLY

1. Plunger 2. Restrictor washer 3. Plug 4. Spring 5. Sealing washer 6. Plug	By-pass valve	
7. Plunger 8. Spring 9. Steel ball 10. Sealing washer 11. Plug	Hold valve	
12. Restrictor washer 13. Seat 14. Shim 15. Plunger 16. Spring 17. Plug	Hold relief valve	
18. Plunger 19. Spring 20. Plug 21. Needle	Rate of lowering valve	
22. Plunger 23. Spring 24. Sealing washer 25. Plug	Non-return valve	
26. Steel ball 27. Spring 28. Plunger 29. Ferrule	TCU valve	
30. Spool 31. Spring	Spool valve	
32. Plunger 33. Spring 34. Plug	Latching valve	

sealing washers are in good condition and the plugs are fully tightened. Replace latching valve plunger, after smearing with oil. Fit the spring and screw the plug tightly into position.

Place restrictor washer in pressure relief valve port and place the seat on top of the washer. Refit the shims, plunger, spring and cap, ensuring that the shims are replaced exactly as removed so that the original pressure setting is maintained. If the relief valve plunger or seat are not in good condition a new relief valve assembly should be fitted. This assembly is supplied complete with the shims required to obtain an opening pressure of 2,500 lb/sq in. (175·7 kg/sq cm) and must be fitted complete, otherwise an incorrect pressure setting will be obtained.

Smear non-return valve plunger with clean oil and place in its bore. Replace the spring, sealing washer and plug, fully tightening the plug. Insert valve body and drop TCU valve ball into its location. Place spring and plunger in position on top of the ball and retain in position by screwing the ferrule loosely into position.

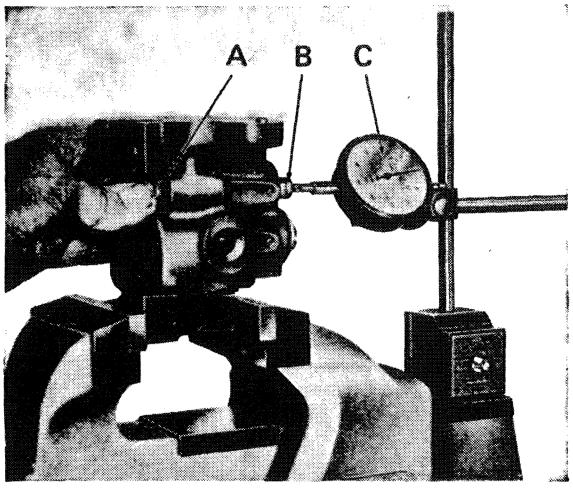

Figure 40. SETTING THE SPOOL VALVE MOVEMENT

A. Spool valve B. Locknuts C. Dial gauge

Setting TCU and Spool Valves

After assembling the control valve it is necessary to set the TCU valve ferrule and the spool valve locknuts in their correct positions by holding the valve in a vice and using a dial gauge to measure valve movement.

All TCU valves are set to the same amount of travel but each spool valve requires an individual setting. This setting is determined during manufacture and then etched on the spool so that if subsequently removed the original setting can be obtained.

To set the valves proceed as follows:

1. Hold valve assembly in a vice, positioned so that the spool is horizontal, and mount a dial gauge so that when the spool is pushed inwards against its spring the amount of spool movement is shown on the gauge. Ensure that the gauge is mounted directly in line with the centre of the spool, otherwise the reading will not be accurate.
2. Push spool fully inwards so that spool spring is fully compressed and hold in this position whilst setting the gauge to zero.
3. Release spool and observe gauge reading. if the gauge reading is greater than the setting dimension, the valve has too much travel and the two locknuts require tightening. If the gauge reading is less than the setting dimension the spool has insufficient travel and the locknuts require unscrewing. After adjusting locknuts to bring gauge reading to the setting dimension etched on the spool, lock the nuts by tightening against each other.
4. When the locknuts have been tightened make a final check by pushing the spool fully inwards, setting the gauge at zero and then slowly releasing the spool. If the gauge reading is more than 0·001 in. (0·025 mm) from the dimension etched on the spool, readjust the locknuts and recheck the spool travel. When the gauge reading is not more than 0·001 in. (0·025 mm) from the dimension etched on the spool the setting is satisfactory.
5. Turn valve assembly over, so that the TCU valve is towards the top, and screw the ferrule inwards until valve plunger lift is reduced to 0·002 in. (0·05 mm) then unscrew the ferrule two-thirds of a turn.

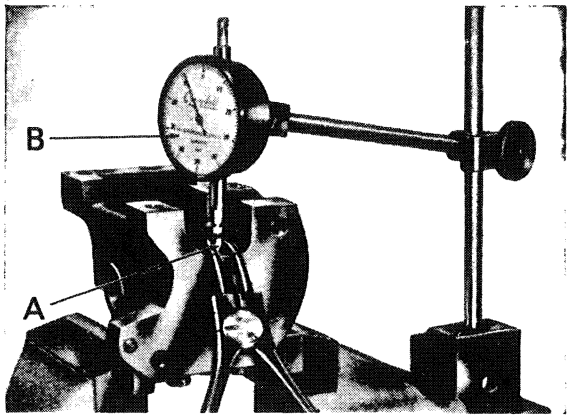

Figure 41. CHECKING THE TCU VALVE MOVEMENT

A. TCU valve plunger B. Dial gauge

6. Mount the gauge vertically over the valve plunger and, using a pair of tweezers or thin-nosed pliers, lift the plunger upwards until it touches the ferrule and set the gauge at zero. Release the plunger and observe the gauge reading; this must be 0·034–0·040 in. (0·86–1·02 mm) and if not within this limit adjust by turning the ferrule slightly. Unscrew the ferrule to increase the plunger movement and tighten the ferrule to reduce the plunger movement.

7. When the plunger movement has been checked and found correct, remove dial gauge and secure the ferrule by peening valve body against ferrule threads with a centre punch.

The control valve is now ready for fitting to the ramshaft bracket and should be placed in a clean bag, to protect it from dirt, until it is required.

CONTROL MECHANISM

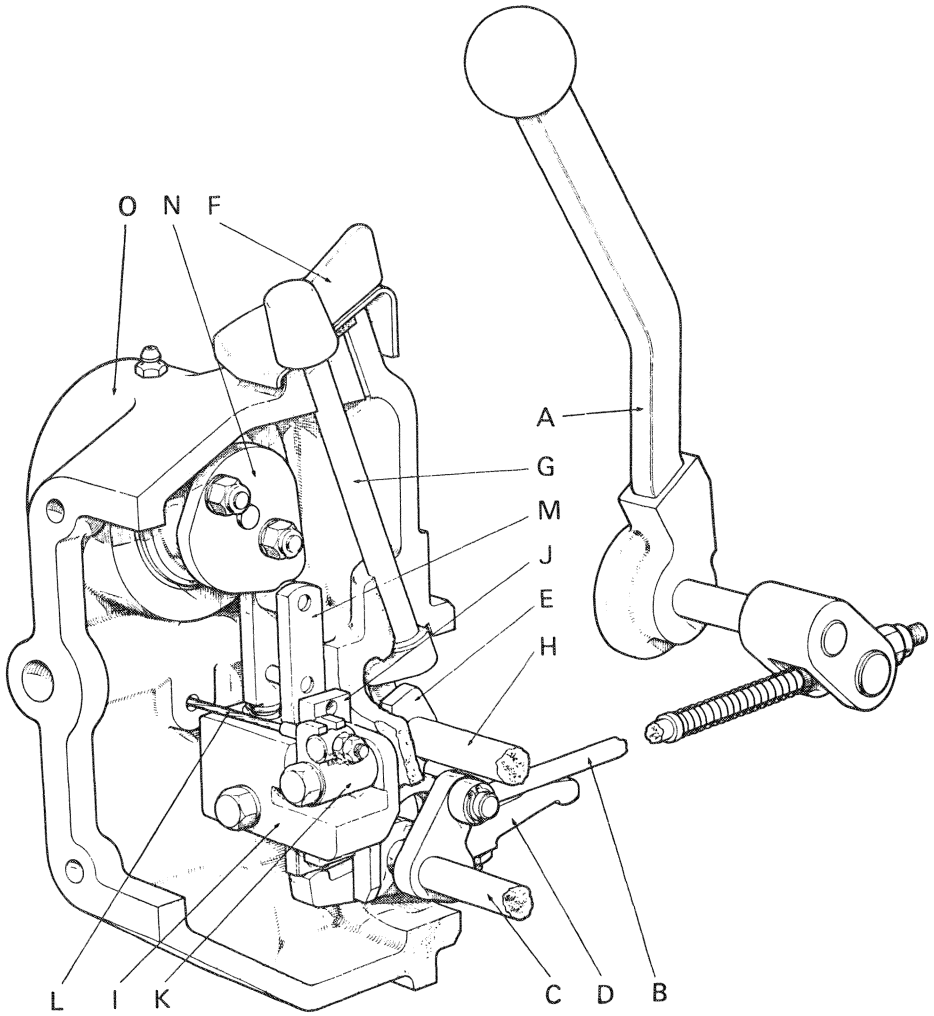

Figure 42. CONTROL MECHANISM

A. Control lever
B. Connecting link
C. Rocker shaft
D Rocker lever
E. Selector fork
F. Dial pointer
G. Selector rod
H. Selector shaft
I. Guide bracket
J. Push rod — depth control
K. Actuating lever
L. Flexible cable — sensing unit
M. Push rod — height control
N. Ramshaft cam
O. Right-hand ramshaft bracket

The control mechanism is housed inside the right-hand ramshaft bracket and lubricated by an oil jet from the low pressure pipe on the side of the control valve. The mechanism can be examined after removing the ramshaft cover, but the ramshaft bracket must be removed in order to completely dismantle the mechanism.

Dismantling Control Mechanism

Having removed the ramshaft complete with bracket (see Page 26), remove the ramshaft cover and disconnect top-link cable. Withdraw cable out of bracket and remove the two bolts attaching push rod guide bracket to ramshaft bracket. Remove guide bracket and push rods: this will expose the control valve bolt situated behind the height control push rod, and enable the control valve to be removed from ramshaft bracket.

Remove the two nuts from cam plate then remove the cam and withdraw ramshaft out of bracket. Remove the small circlip from rocker shaft and remove connecting link.

Drive the spring pin from selector fork and remove welch plug from right-hand side of bracket by driving a small punch into the centre of the plug and then levering out. Using a small drift through the hole previously sealed with the welch plug, drive selector shaft out until it will allow the fork to be lifted. After removing the fork push selector rod out of bracket, noting that a detent ball and spring are located under the rod and will be displaced as the rod is finally withdrawn. When the rod has been removed extract spring from its hole by inverting the bracket and allowing spring to fall out, or lifting out with a piece of bent wire.

Remove rocker shaft locating screw—this is positioned on the front face of the bracket and may be covered if the gasket is still adhered to the face—and slide the rocker arm off the shaft. Turn rocker shaft until the arm pin is towards the centre of bracket, then remove shaft by sliding it sideways into the middle of bracket. It is not necessary to remove the welch plug sealing the rocker shaft hole in the side of the bracket.

Remove spring pin from dial pointer and pull the pointer off its shaft; the shaft can then be drawn downwards out of the bracket. Remove the two screws holding the indicator panel on top of the bracket, lift off the panel and remove breather pad and 'O' ring.

The ramshaft bearing bush need not be removed unless it is to be renewed, but if worn can be removed by driving it inwards into the bracket.

Assembling Control Mechanism

After cleaning all components — any dirt left in the bracket will eventually be pumped into the hydraulic system — commence reassembly by fitting a new ramshaft bearing bush. Press bush into bracket, positioning the bush hole in line with the grease nipple and the bush split towards the rear axle case side of the bracket.

Place the spring anchor, breather pad and 'O' ring in their positions on top of bracket then replace indicator panel. Smear selector rod with oil and fit into position. Turn the rod so that the crank is pointing inwards into the bracket then fit dial pointer and secure with spring pin. After fitting spring pin, check that dial pointer can be moved quite freely.

Smear rocker shaft with oil and slide into position, turning shaft so that the crank clears the inside of bracket. Fit rocker lever on to shaft, longer end of the lever outwards and the bush flange towards rocker shaft, then fit the locating screw to retain shaft in position. Fit a new welch plug to seal the rocker shaft hole in the outside of bracket if the original plug has been removed.

Place the detent spring in the hole in face of bracket and place the detent ball on top of the spring. Smear the selector shaft with oil and push the plain end of the shaft into right-hand side of the case until it touches the detent ball. Using a small punch to hold the ball down against its spring, push shaft until it rides on to the ball and allows the punch to be removed. Fit selector fork over rocker lever and engage selector rod into fork slot so that when the selector shaft is pushed further into the case it enters the fork. Turn selector shaft so that the pin-hole is in line with the hole in the fork then push shaft into position and fit the spring pin. Turn the dial pointer into each of its three positions in turn, to check that the rocker arm slides freely on the shaft. Fit new welch plugs to seal the ends of selector shaft bores.

Check that the large 'O' ring is in position on the ramshaft before smearing the journal with grease. Fit the ramshaft into the bracket and replace cam plate, fitting flat washers under the two cam nuts. Refit control valve assembly on to front of the bracket, taking care to position the rocker arm between the abutment block and spool when placing valve assembly in position on the dowels. Firmly tighten the valve retaining nuts, replace and tighten the retaining bolt through the inside of ramshaft bracket.

Replace the two push rods in position in guide bracket, fitting the spring under the height control push rod and smearing the depth control push rod with thick grease, so that it will not fall out when the guide is held vertical. Refit the guide, pushing it upwards into position until the left-hand bolt can be refitted, then refit actuating lever, bush and right-hand bolt. Ensure that the depth control push rod is raised when refitting the actuating lever, otherwise the lever will not be in its correct working position. Refit the pull-off spring on depth control push rod, checking that when the spring is fitted it pulls the rod upwards until the peg in the lower end of the rod touches the guide bracket.

Replace control lever connecting link, securing to the rocker shaft with a small circlip and refit top link cable.

Refit ramshaft and bracket on to tractor (see Page 26) and adjust the system as shown on Page 18.

RAM CYLINDER AND LINKAGE

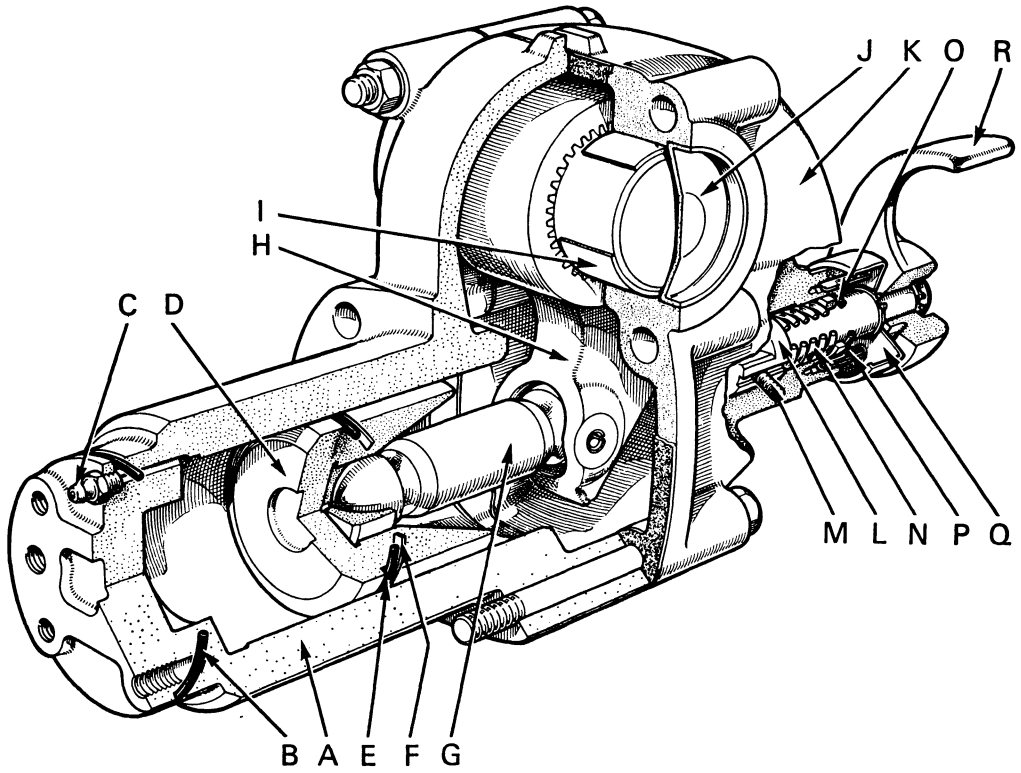

Figure 43. RAM CYLINDER

A.	Cylinder body	B.	'O' ring — body	C.	Vent screw	D.	Piston
E.	'O' ring — piston	F.	Leather anti-extrusion ring	G.	Connecting rod	H.	Ramshaft arm
I.	Ramshaft bearing	J.	Sealing disc	K.	Cylinder cover	L.	Latch pin
M.	Locating screw	N.	Spring	O.	'O' ring — latch pin	P.	Needle roller
		Q.	Dirt excluder	R.	Operating lever — latch		

The ram cylinder is fitted inside the left-hand side of rear axle case and incorporates a locking latch which enables ramshaft to be mechanically locked in the raised position. The ram cylinder cover can be removed with the ramshaft in position, but ramshaft must be removed before the ram cylinder can be withdrawn from axle case.

Ram Cylinder

After removing the ramshaft complete with right-hand bracket (see Page 26), clean front of axle case and remove three-way valve. If a take-off valve is not fitted remove the connector: the cylinder can then be pushed rearwards out of the axle case; as it will initially be tight, tap the front of the cylinder with a block of wood.

Before refitting ram cylinder, clean the axle case and smear both sides of gasket with jointing compound. Place gasket in position on axle case, checking that the oil feed and drain holes are not covered, and fit the large 'O' ring on the front of ram cylinder. Push the cylinder into position, but before pushing it fully home temporarily fit the two long bolts through the centre holes in the cylinder so that cylinder and case are aligned before the gasket touches cylinder face. When cylinder is in position, check that the two lower bolts can be screwed into axle case.

Locking Latch

The locking latch is housed in the ram cylinder cover and consists of a spring-loaded plunger which, when released, engages under the heel of ramshaft arm and holds ramshaft in the raised position. To strip the latch mechanism, first remove the six bolts attaching cover to ram cylinder, noting that the two centre bolts pass through the axle and that nuts are positioned below front edge of axle case. As the cover is partially full of oil, a container of approximately 2 pints (1 litre) capacity should be positioned under the cover when the joint is "broken."

Turn operating lever into the Engage position and remove circlip from end of pin: this will enable the operating lever and dirt excluder to be removed

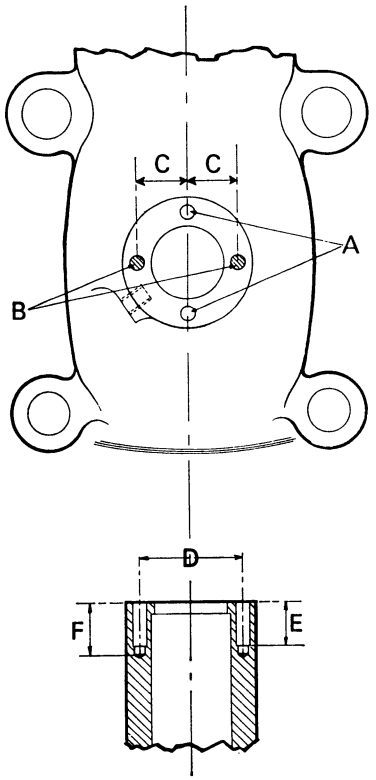

Figure 44. RE-DRILLING RAM CYLINDER COVER

Drill two holes $\frac{11}{64}$ in. (4·5 mm) diameter and $\frac{3}{4}$ in. (19·05 mm) deep at positions shown then ream to 0·1865–0·1870 in. (4·37–4·75 mm) and $\frac{5}{8}$ in. (15·9 mm) deep.

A. Original holes B. New holes
C. 0·6875–0·6885 in. (17·46–17·48 mm)
D. 1·375–1·377 in. (34·92–34·97 mm)
E. $\frac{5}{8}$ in. (15·7 mm) F. $\frac{3}{4}$ in. (19·05 mm)

and the inner circlip exposed. Remove the pin locating screw from the cover boss and remove the inner circlip. Push pin inwards out of the cover and remove the 'O' ring, spacer and spring from the pin.

Do not attempt to remove the needle rollers unless they are to be renewed and take care that they are not damaged by careless handling of cover; the rollers are hard and will break before bending. In the event of a roller being broken in the cover, two new holes should be drilled to the dimensions shown in Fig. 44 as the rollers are too hard to be drilled out. When fitting new needle rollers, they should be pressed into the cover until the ends of rollers are 0·728–0·718 in. (18·49–18·24 mm) from cover face. If the roller protrusion is outside these dimensions the latch pin will either not disengage or have insufficient hold on the ramshaft arm to support heavy loads.

Fit the spring, spacer ring and 'O' ring on pin, taking care that the 'O' ring is not damaged as it is passed over the circlip grooves. Smear pin with clean oil and refit inside cover, aligning the pin groove with locating screw hole in cover boss. Clean the locating screw and smear with Loctite, then screw it in until it touches the bottom of pin groove and unscrew a quarter turn. Push pin into position to compress the spring and expose inner circlip groove. Replace circlip, smear pin end and needle rollers with grease and place dirt excluder in position. Refit operating lever — handle in the Engage position — and retain with the circlip. After fitting outer circlip, turn operating lever into the Disengage position several times to check that the latch pin moves quite freely.

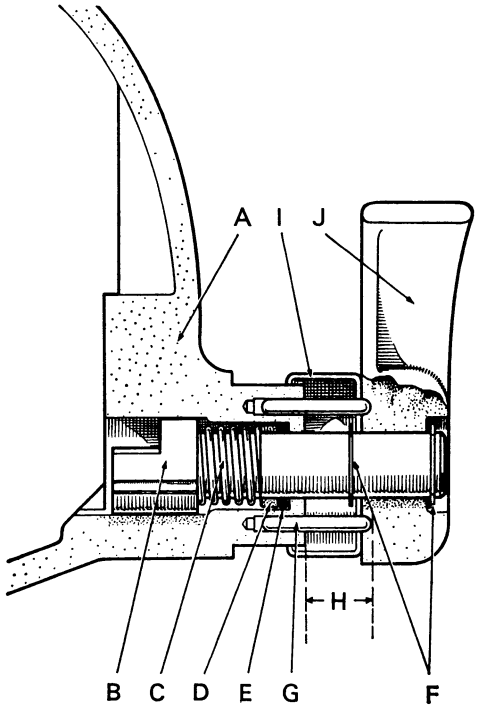

Figure 45. LINKAGE LOCKING LATCH

A. Ram cylinder cover B. Latch pin C. Spring
D. Spacer ring E. 'O' ring F. Circlips
G. Needle rollers
H. Roller protrusion — 0·718–0·728 in. (18·24–18·49 mm)
I. Dirt excluder J. Operating lever

Clean the cover and cylinder faces before smearing with jointing compound. Place the half-bearing in position in the cover and turn ramshaft bearing bush so that the hole is opposite the cover grease nipple, then refit cover. Before pushing cover fully home, smear sealing disc with jointing compound and place in position so that it is clamped between cover and case when the cover bolts are tightened. Note that the two long bolts are fitted with sealing washers under their heads.

Ram Cylinder Piston

The ram cylinder piston can be removed without removing ram cylinder from axle case. After removing cover from cylinder, remove the three-way valve — or connector if a take-off valve is not fitted — and push piston out of cylinder by inserting a $\frac{5}{16}$ in. (7 mm) rod through the oil-feed hole.

The piston is sealed in its bore by an 'O' ring backed by a leather anti-extrusion ring. As the 'O' ring is pressed against the cylinder bore by oil pressure, it is essential that the bore has a smooth finish. If bore becomes scored the 'O' ring will be damaged and unable to provide a seal.

A cylinder with a worn or damaged bore may be reconditioned by reboring and fitting a 0·020 in. oversize piston. As a bored finish is too rough for the rubber 'O' ring to operate against, **the cylinder must be honed after boring.** The bore must be honed to a surface finish not greater than 16 micro inches centre line average, which is a highly polished finish, otherwise the 'O' ring will fail to make a seal after a short period of service.

When fitting new piston seals, place the leather anti-extrusion ring in thin oil and allow to soak for thirty minutes. Clean the piston and fit leather ring first, taking care not to stretch the ring further than necessary and positioning so that rough side of leather is towards the piston crown, i.e., on the 'O' ring side. Fit a new 'O' ring on the crown side of leather ring, pressing the leather ring sideways with a screwdriver blade as 'O' ring is slipped into the groove. When the 'O' ring is in position examine leather ring and ensure that it stands proud of piston all the way round its circumference. Do not fit piston into cylinder immediately after fitting the seals but allow to stand for at least 30 minutes, to allow time for the leather ring to settle after being stretched.

The bore is chamfered to facilitate entering the seals. After cleaning the bore, smear the piston with clean oil and carefully push into cylinder. If connector is in position on cylinder, open bleeder valve to avoid an air-lock forming and preventing the piston being pushed into cylinder.

Ramshaft

The ramshaft arms are shrunk on to the shaft and must not be removed as this would damage shaft and destroy the interference fit, for this reason arms and shaft are not supplied separately.

If a ramshaft develops excessive end-float do not attempt to move the levers but make a suitable shim and fit this on right-hand side of shaft, so that when the ramshaft bracket is in position the shaft end-float is reduced to not less than 0·010 in. (0·25 mm).

Ramshafts on 990 tractors are $2\frac{5}{8}$ in. (66·67 mm) diameter and are larger than 880 and 770 ramshafts, which are both 2 in. (5·8 mm) diameter. The 880 ramshafts (Part No. 916603) and 770 ramshafts (Part No. 917137) are therefore dimensionally identical but are not interchangeable as they are of different material. The stronger 880 shaft (916603) must not, therefore, be replaced with a 770 shaft (917137) and for identification purposes the tractor type, either 770 or 880, is stamped on the shaft.

TOP LINK SENSING UNIT

The top link sensing unit is mounted on top of the power take-off case and connected to the control mechanism by a flexible cable. The unit requires no maintenance, but if faulty operation is suspected the shaft should be withdrawn and checked that it is free to respond to changes in compression and tension.

Flexible Cable

Before dismantling sensing unit, first check the flexible cable to ensure that the fault is in the sensing unit and not the cable. To check the cable, screw adjuster fully inwards and disconnect inner cable. If the cable nipple is then gripped with a pair of pliers and pulled outwards the spring in the control mechanism should withdraw the cable as soon as it is released. If the cable does not return when released it is too tight to operate correctly and must be removed and freed, or renewed.

To remove the flexible cable, remove cover from right-hand ramshaft bracket and disconnect cable from actuating lever. The cable can then be pulled out of the bracket casting. On 990 tractors the cable end is threaded and it is necessary to remove the two locknuts and nipple in order to withdraw the cable, but on 880 and 770 tractors the inner cable nipple cannot be removed and the clevis pin must be removed so that the nipple can be hooked out of fork end.

To remove shaft, disconnect flexible cable and remove the four end-plate setscrews. Insert a bar through the link-pin hole and pull the shaft, complete with end-plate, out of the housing. Do not drive a screwdriver between end-plate and housing as this would damage the shims.

Check that end-plate is free to slide on shaft sleeve and the end collar is free to slide in the housing bore. If necessary the shaft can be dismantled by removing the collar pin and tapping collar and thrust washer off the shaft end. The sleeve is screwed on to the shaft and should be removed by holding the two flats between vice jaws and turning the shaft by means of a bar through the link-pin hole. Remove 'O' ring from groove inside end-plate bore and check that end-plate slides freely on the sleeve. If necessary, clean the outside of sleeve with abrasive tape.

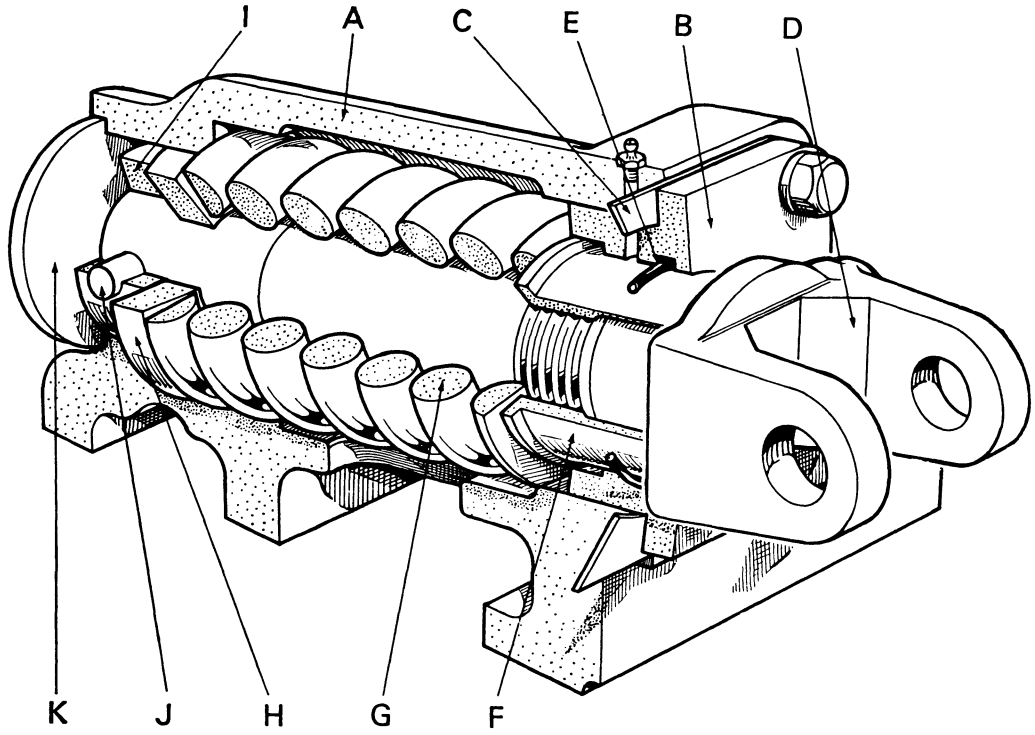

Figure 46. TOP LINK SENSING UNIT

A. Housing B. End plate C. Shims D. Shaft E. 'O' ring F. Sleeve
G. Spring H. Thrust washer I. Collar J. Retaining pin K. Welch plug

To assemble the unit, clean the sleeve and shaft threads before applying a few drops of Loctite. Fit a new 'O' ring in the end-plate bore, smear with grease, and place the end-plate on the sleeve before screwing sleeve firmly in position. On 990 tractors a distance piece is fitted between the shaft-end and sleeve, but on 880 and 770 tractors the sleeve is screwed directly against the shaft end without distance piece.

Replace the spring, thrust washer and collar on shaft and fit the retaining pin through collar. When pin is in position check spring end-float; if end-float is more than 0·010 in. (0·25 mm) remove collar pin and fit a thicker thrust washer so that the end-float is reduced to a minimum without spring being compressed.

Thrust washer details:

Part No.	Thickness
915112	0·355 in. (9·02 mm)
915113	0·365 in. (9·27 mm)
915101	0·375 in. (9·52 mm)
915114	0·385 in. (9·78 mm)
915115	0·395 in. (10·23 mm)
915116	0·405 in. (10·29 mm)

When the collar is finally fitted, check that pin protrudes equally through both sides of collar and that pin ends were not damaged when pin was driven in. The pin must slide freely in the housing slots and, if necessary, clean the ends of pin with a file.

Smear shaft collar with grease and replace shims on end-plate. Fit shaft assembly in housing and replace the four end-plate setscrews. Check shaft end-float as the end-plate screws are tightened and note that it reaches a minimum when the bolts are fully tightened. If tightening the setscrews does not reduce shaft end-float to 0·010 in. (0·25 mm) the shim thickness is too great. If tightening the set-screws reduces but then increases the end-float as the screws are fully tightened the spring is being compressed, due to an insufficient thickness of shims.

End plate shims:

Part No.	Thickness
915096	0·005 in. (0·13 mm)
915097	0·010 in. (0·25 mm)
915098	0·030 in. (0·76 mm)

Pack the end of housing bore with grease, smear welch plug with sealing compound then refit the plug.

DIMENSIONAL DATA

Pump relief valve setting	990	880	770	2000 lb/sq in (140 kg/sq cm)
Hold valve pressure setting	990	880	770	2500 lb/sq in (176 kg/sq cm)
Rated working lift at link ends	990			2000 lb (907 kg)
		880		1800 lb (816 kg)
			770	1600 lb (726 kg)
Rated static lift at link ends	990			3150 lb (1430 kg)
		880		2500 lb (1135 kg)
			770	1950 lb (885 kg)
Ram piston diameter	990			3·498–3·4995 in (88·85–88·887 mm)
		880	770	3·123–3·1245 in (79·324–79·362 mm)
Piston stroke	990			$5\frac{31}{64}$ in (139·3031 mm)
		880	770	$4\frac{33}{64}$ in (114·6969 mm)
Ram cylinder bore	990			3·500–3·5018 in (88·9–88·9457 mm)
		880	770	3·125–3·1268 in (79·473–79·416 mm)
Pump output at 1800 engine rev/min	990	880	770	5 gal/min (23 litres/min)
Pump output at maximum engine speed	990	880		6 gal/min (27·3 litres/min)
			770	$5\frac{1}{2}$ gal/min (25 litres/min)
Maximum TCU pressure	990	880		700–750 lb/sq in (49–52·5 kg/sq cm)
			770	425–475 lb/sq in (29·75–33·3 kg/sq cm)
Lift latch needle roller protrusion	990	880	770	0·718–0·728 in (18·24–18·49 mm)
Sensing unit spring details:				
free length	990	880	770	4·25 in (108 mm)
spring rate	990			10800 lb/in (12450 kg/cm)
spring rate		880	770	5000 lb/in (5760 kg/cm)

TIGHTENING TORQUES

Magnetic filter cover bolts	990	880	770	15 lb ft (2·0 kg metres)
Pump body cover bolts	990	880	770	40 lb ft (5·5 kg metres)
Pump drive gear nut	990	880	770	45 lb ft (6·2 kg metres)
Ram cylinder vent screw	990	880	770	8 lb ft (1·0 kg metres)
Ram cylinder cover nuts	990	880	770	120 lb ft (16·5 kg metres)
Ram cylinder cover bolts	990	880	770	75 lb ft (10·5 kg metres)

The following figures apply to bolts of standard material with either coarse (UNC) or fine (UNF) threads and may be used for all bolts and nuts not listed in the previous table.

Thread Diameter	Torque	
$\frac{1}{4}$ in ..	7 lb ft	0·97 kg metres
$\frac{5}{16}$ in ..	15 lb ft	2·07 kg metres
$\frac{3}{8}$ in ..	25 lb ft	3·46 kg metres
$\frac{7}{16}$ in ..	45 lb ft	6·22 kg metres
$\frac{1}{2}$ in ..	65 lb ft	8·98 kg metres
$\frac{5}{8}$ in ..	110 lb ft	15·2 kg metres
$\frac{3}{4}$ in ..	140 lb ft	19·3 kg metres

SUMMARY OF DESIGN CHANGES

Details of Change	When introduced
Neoprene seal (Part No. 623424) and plastic sleeve (Part No. 627068) fitted on control lever pivot shaft to prevent any possibility of the shaft seizing due to water seepage into the housing. Seals can only be fitted to earlier tractors if the control lever housing is counterbored $\frac{1}{4}$ in (6·5 mm) deep and $\frac{43}{64}$ in (17 mm) diameter.	990/483913 880/531006 770/582781 (January 1966)
Sensing unit changed from single acting (compression only) to double acting (compression and tension). Height control push rod operated by cam on ramshaft instead of connecting link as previously.	770/583397 (April 1966)
Hydraulic pump modified to give the rotor bushes a uniform pressure balancing action. Part No. of pump changed from 913394 to 917541. Pumps, but not components, are interchangeable.	990/488989 880/534055 770/584078 (June 1966)
Lower links and top link lengthened to increase implement clearance on tractors fitted with 12–38 tyres. 917420 lower link, 38$\frac{1}{2}$ in (97·8 cm) long 917429 screw and housing, 8$\frac{1}{2}$ in (21·6 cm) long	990 tractors with 12–38 tyres only (June 1966)
Grease nipple fitted at top of sensing unit housing to lubricate shaft sleeve. Part Nos. of housing (915092) and end-plate (915261) unchanged.	990/491399 880/535788 770/584904 (September 1966)
Rigidity of control lever improved by the fitting of an additional dowel (621811) between the lever boss and friction plate (909583). Part Nos. unchanged.	990/491099 880/535574 770/584862 (September 1966)
Plug fitted on top face of rear axle case to enable dial gauge to be used to check spool valve movement.	990/492105 880/536453 770/585219 (September 1966)
Diameter of levelling lever gear housing cap bolts increased from $\frac{3}{8}$ UNC. to $\frac{7}{16}$ UNC. New assembly (Part No. 919619) is interchangeable with earlier assembly (Part No. 915775).	990/492888 880/536971 (October 1966)

HYDRAULIC SYSTEM

Front Mounted Pump

1200, 1210, 1212, 1410 AND 1412 TRACTORS

Includes update 9-38177 dated December, 1976
Includes update 9-38192 dated May, 1978

CASE CORPORATION

Pub 9-37241

Printed in U.S.A.
September, 1978

⚠ DANGER — Hydraulic equipment can be dangerous. ⚠

Not only can equipment move unexpectedly but oil can, when released under pressure, pierce the skin to cause serious injuries.

FOR YOUR SAFETY

Before commencing work on a machine ensure all pressure has been relieved from the hydraulic system and the equipment is resting in a fully-lowered position. After lowering the equipment to the ground or against its fully-lowered stop, allow the engine to come to rest and then operate the control valves to relieve all oil pressure. If any equipment cannot be lowered, because for example it would interfere with access, do not support it hydraulically but use a correct support so that when all system pressure is released the equipment is safely supported.

Do not work under an implement whilst it is raised on the tractor linkage and supported only by the locking latch. Always place a support under the rear of the implement, so that it cannot drop if a mechanical failure occurs.

Never check for oil leaks with the hands and do not approach very close to a pipe, or component, suspected of leaking.

The most dangerous type of oil leak is a leak so small as to be almost invisible. A very fine jet of oil under a pressure far less than is used in tractor hydraulic systems can penetrate the skin, even through clothing, and cause PERMANENT tissue damage.

An oil injection through the skin is relatively painless and may not be noticed at the time. It may later become painful however and give the impression of a cut which has become infected. If this occurs obtain medical attention immediately. The damaged tissues must be removed without delay otherwise the affected area will spread and major surgery may be required to prevent it becoming fatal.

Painful burns can be caused by only a small amount of hot oil coming into contact with the skin.

CONTENTS

Page

How it works

Single hydraulic pump . . 5
Tandem hydraulic pump . . 6
Hydraulic pump . . 7
† Hydraulic oil filtration . . 8
† Pressure filter . . 8
† Full-flow suction filter . . 8
Pump bleed valve . . 9
Oil cooler . . 10
Selectamatic control valve . . 12
Selector dial pointer mechanism . . 15
Traction control (TCU) . . 17
Ram cylinder . . 18
Linkage support ram . . 18
Sensing unit . . 19
Three-point linkage . . 21
Dump valve . . 22
Three-way take-off valve . . 23
Double-acting live take-off valve . . 24

Fault finding

Lift test . . 27
Hold test . . 28
Lowering test . . 28
TCU test . . 28
Height control test . . 28
Depth control test . . 28

Adjustments

Abutment plate . . 29
TCU valve screw . . 29
Ramshaft cam . . 30
Control lever connecting link . . 30
Quadrant spring carrier . . 31
Sensing unit cable . . 31
† Q Cab adjustments . . 31A

Unit removal and replacement

† Pressure filter . . 32
Full flow suction filter . . 32
Oil cooler . . 32
Hydraulic pump . . 33
Pump relief valve . . 33
Pump bleed valve . . 33
Dump valve . . 34
Three-way take-off valve . . 34
Linkage support ram . . 35
Double-acting live take-off valve . . 35
Sensing unit . . 36
Ramshaft . . 36
Ram cylinder . . 38
Selectamatic control valve . . 39
Selector dial pointer mechanism . . 39

Page

Unit maintenance and repair

† Filters 41
Hydraulic pump 41
Pump relief valve 46
Pump bleed valve. 47
Selectamatic control valve 47
Dump valve 50
Oil cooler valve 52
Selector dial pointer mechanism 52
Ram cylinder 56
Linkage support ram 57
Sensing unit 58
Three-point linkage 61
Three-way take-off valve. 62
Double-acting live take-off valve 63

Specifications and data

† Pressure filter 65
† Full flow suction filter 65
Hydraulic pump 65
Pump relief valve 65
Pump bleed valve. 65
Selectamatic control valve 65
Ram cylinder 66
Linkage support ram 66
Sensing unit 66
Three-point linkage 67
Three-way take-off valve. 67
Double-acting live take-off valve 67

Summary of design changes 68

† *Updated December 1976*
Pub. 9-38177

Single Hydraulic Pump: Mounted in the front of the tractor main frame and driven, at engine speed, by a coupling attached to the crankshaft pulley the pump is in operation whenever the engine is running.

† The pump draws oil from the reservoir in the main frame through a strainer and pumps it through a pressure filter to the distribution block mounted on top of the rear axle case From the distribution block oil flows to the Selectamatic® control valve and also to any live take-off valves mounted on top of the distribution block.

† **Note:** Early tractors not incorporating a Pressure Filter are fitted with a full-flow suction filter in the transmission oil reservoir. The suction filter is fitted with a vacuum switch connected to the yellow warning light on the instrument panel to indicate that the filter element by-pass valve is open.

When the take-off valve is in neutral (hold) position, or if no take-off valve is fitted, a continuous flow of oil is supplied to the Selectamatic valve and when the tractor control lever is in the 'Raise' position oil is directed into the ram cylinder to raise the linkage, or supply oil to an attachment connected to the three-way take-off valve

Moving the tractor control lever into either the 'Hold' or 'Lower' position diverts pump output into the low pressure pipes, which directs it into the transmission and PTO for lubrication purposes

When a live take-off valve is moved from its neutral (central) position pump output is diverted from the Selectamatic valve and to the equipment connected to the take-off valve

The tractor internal hydraulic system is therefore, inoperative whenever a live take-off valve is being used to operate an attachment

If a three-way take-off valve is fitted, this is bolted to the ram cylinder so that oil flow can be diverted from the tractor ram cylinder and to an external attachment The tractor control lever can then be used to control external equipment instead of the tractor linkage.

To prevent excessive load being placed on the system a pressure relief valve is connected into the pipe between pump and distribution block When excessive pressure occurs in the system the valve opens and returns surplus oil into the main frame reservoir.

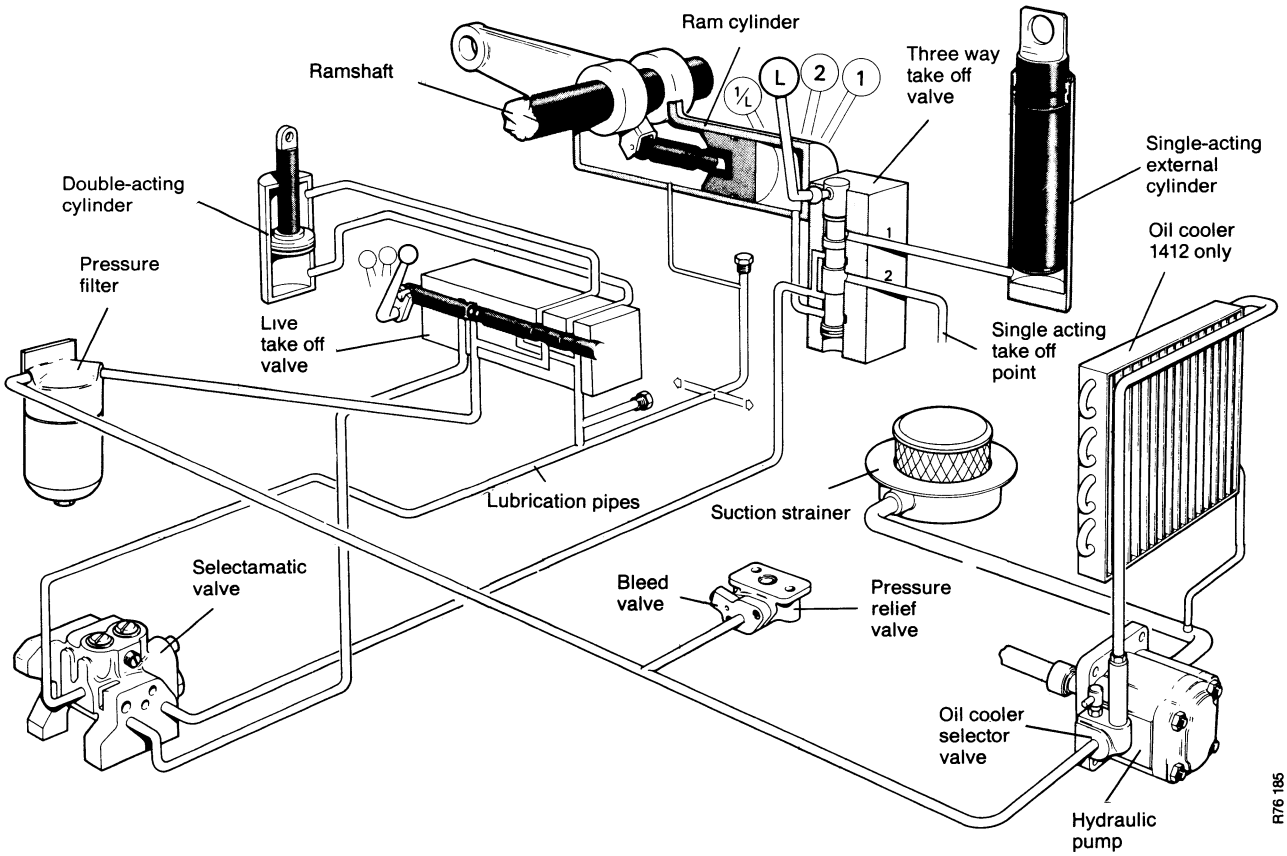

† FIGURE 1 DIAGRAM OF HYDRAULIC SYSTEM WITH SINGLE HYDRAULIC PUMP

Tandem Hydraulic Pump: Mounted in the front of the main frame, in the same manner as the single pump, the tandem pump is two separate pumps incorporated in a single unit Both pumps are driven by the same driveshaft and have a common inlet connection but separate outlet connections and relief valves.

The front pump has an output of 22 litres/min (5 gal/min) and the rear pump an output of 25·5 litres/min (6 gal/min)

On 1210 and 1212 tractors the front pump supplies oil to the tractor Selectamatic system and the rear pump supplies oil to live take-off valve or valves mounted on the distribution block.

On 1410 and 1412 tractors the two pumps are connected the opposite way round, the rear pump — which has the same capacity as the single pump on these models — supplies oil to the tractor Selectamatic system and the output from the front pump is piped to the live take-off valve, or valves, mounted on the distribution block.

Equipment connected to the live take-off valve therefore operates quite independently of the tractor internal hydraulic system Operating the take-off valve does not disconnect the supply to the tractor internal system, as occurs on tractors fitted with a single pump

In addition to allowing external equipment to be operated independently of the tractor internal system the output of both pumps can be supplied to the external equipment When the combining valve is operated the output from one pump is diverted from the tractor internal hydraulic system, which is then inoperative, and to the live take-off valve The output from both pumps is then combined and a flow of 48 litres/min (11 gal/min) is available to operate equipment connected to the live take-off valves

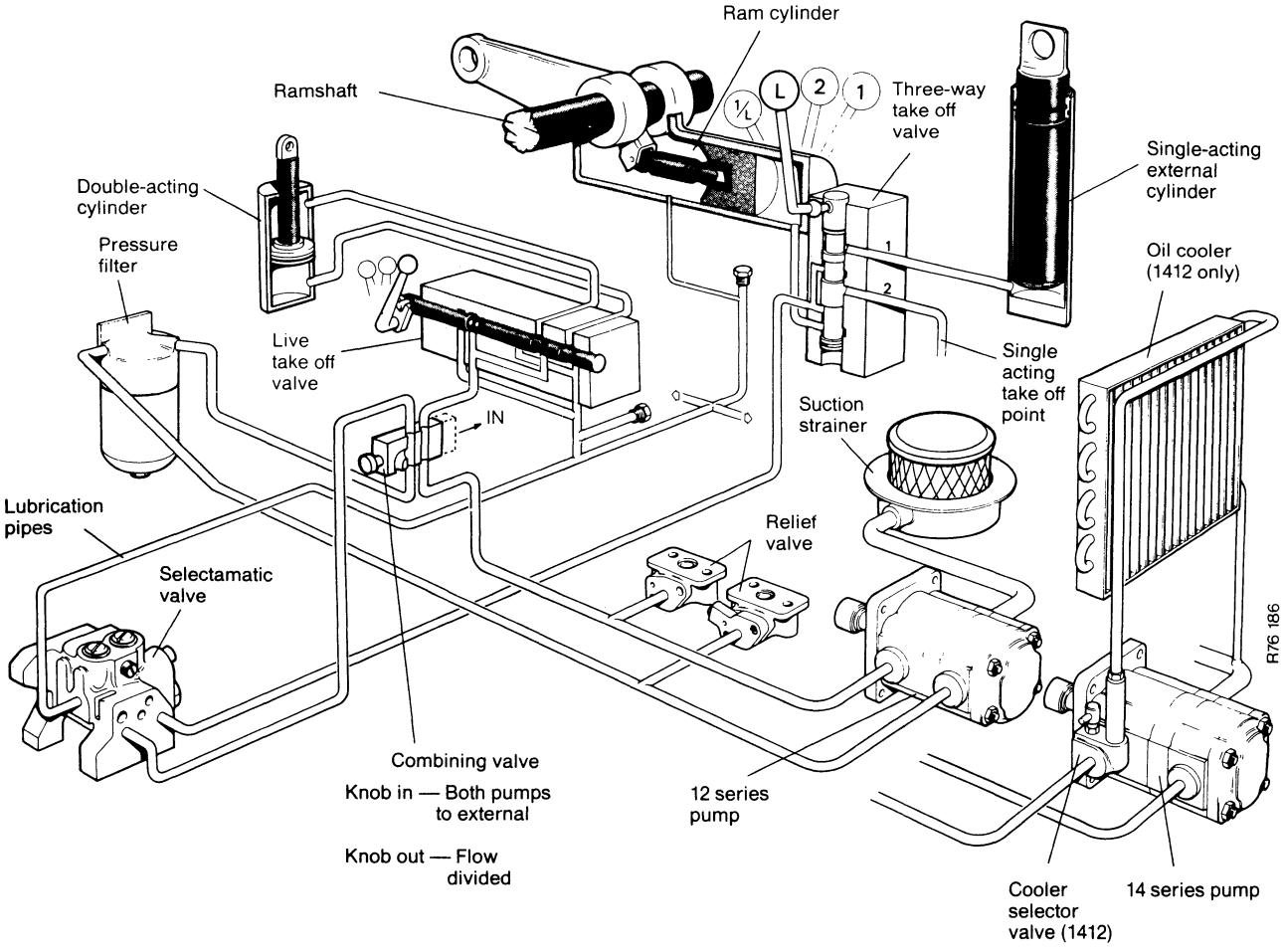

† FIGURE 2 DIAGRAM OF HYDRAULIC SYSTEM WITH TANDEM HYDRAULIC PUMP

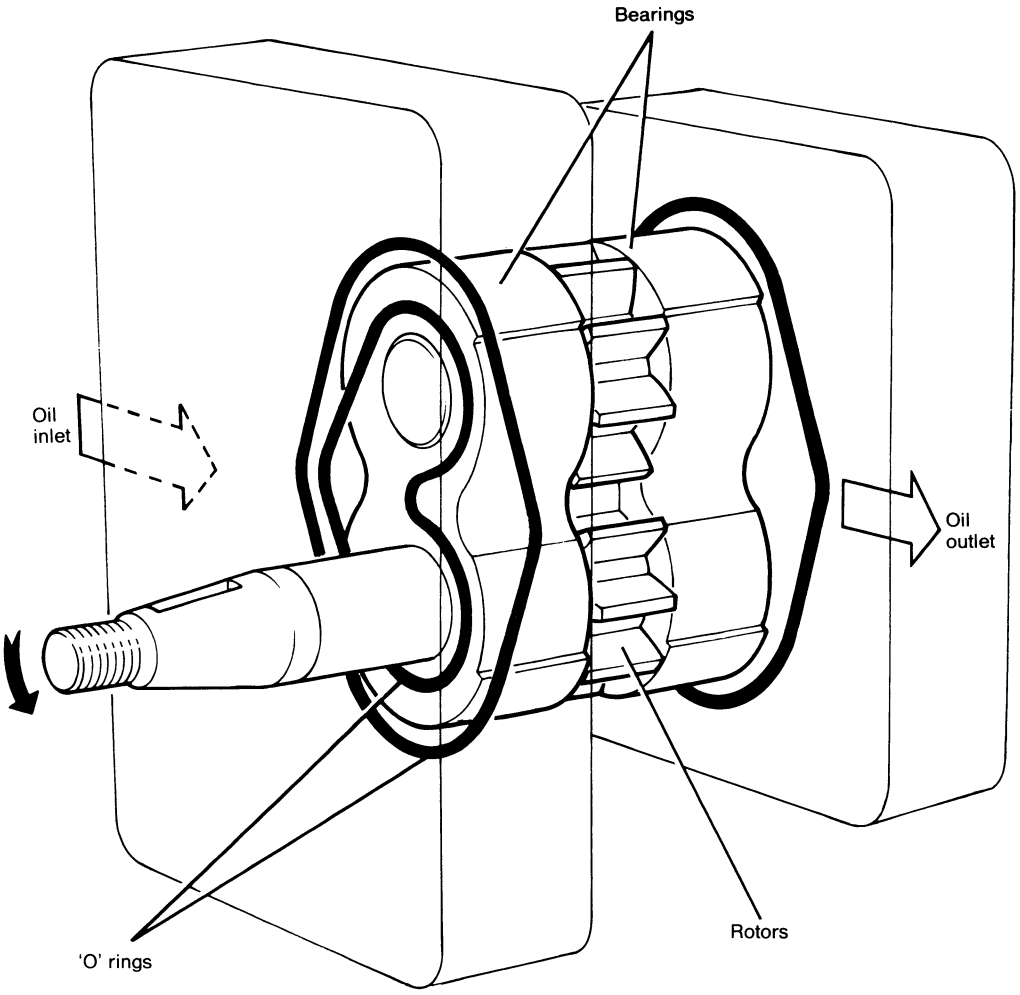

FIGURE 3 HYDRAULIC PUMP

Hydraulic Pump: The two gear-shaped rotors are meshed together and rotate inside a close-fitting housing As the rotors turn, the spaces between adjacent gear teeth transfer oil from the inlet to the outlet side of pump — there being no open tooth cavity at point of mesh. The rotors are supported in bearings which not only provide support for the rotor shafts but also seal the side faces of the rotors against oil leakage. Pump efficiency depends on a good seal being maintained between the rotor side faces and bearings The bearings are, therefore, pressure balanced by feeding pump output pressure into the cavities between the bearings and pump body The cavities are sealed by 'O' rings and positioned towards outlet side of bearings. When pump output pressure rises, the pressure in bearing cavities also rises so that the tendency of the output pressure to push the bearings apart is balanced by the pressure in the cavities pushing the bearings against the rotor side faces. Oil leakage between the rotor side faces and bearings is thus reduced to a minimum

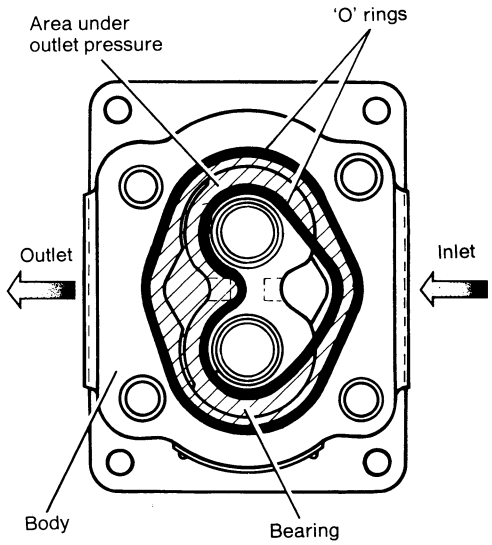

FIGURE 4
PRESSURE BALANCING
OF PUMP BEARINGS

† **Hydraulic Oil Filtration:** Tractors are fitted with either full-flow suction or pressure line filters according to date of manufacture. All tractors prior to the following serial numbers have suction filters.

1210-12	11152164
1210-12Q	11152617
1410-12	11200634
1410-12Q	11200752

Pressure line filters became standard at the following serial numbers

1210-12	11152576
1210-12Q	11152617
1410-12	11200752
1410-12Q	11200753

There are therefore some 1210-12 and 1410-12Q tractors between the serial numbers listed which may have suction or pressure line filtration.

† **Pressure Line Filter:** Located between the P.T O case and the right-hand ramshaft (rockshaft) bracket in the pump delivery (pressure) line. On tandem pump installations, only the internal service oil is filtered. The filter element is of the disposable type and cannot be cleaned. A by-pass valve is incorporated to open when an element becomes blocked but as this oil then enters the Selectamatic Control Valve unfiltered, this circumstance must be avoided by changing the element at the recommended intervals.

It is not necessary to drain the transmission oil when changing the pressure filter element.

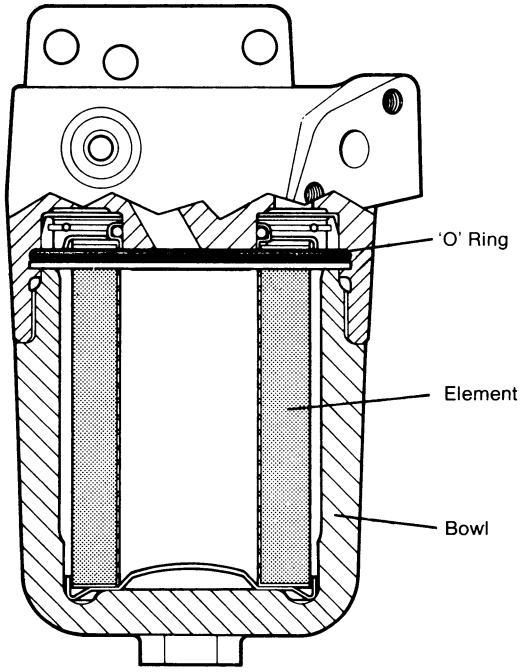

FIGURE 5
† PRESSURE FILTER

† **Suction Strainer:** The pump (or pumps) are protected by a wire mesh strainer located at the pump inlet pipe in the transmission oil reservoir on tractors fitted with pressure filters

Full flow Suction Filter attached on underside of main frame and consisting of a paper element filter, a fine screen filter, valve and magnetic filter.

Transmission oil from the main frame reservoir passes through the paper element, where particles down to 40 microns are removed. When the filter element becomes chocked the restriction to the flow of oil through the element causes a depression, or partial vacuum, on pump side of filter. When this depression reaches 0 28kg/sq cm (4 lb/sq in) the spring-loaded valve inside screen filter is drawn from its seat and allows oil to by-pass the paper element, by flowing through the screen filter and past the magnetic filter The pump is thus not starved of oil but fed with oil that has not been filtered through the paper element

As it is not desirable for oil to enter the hydraulic system without first passing through the paper element a vacuum switch, which also operates at 0 28kg/sq cm (4lb/sq in), is connected to the pump side of the filter. When the depression in filter is sufficient to open the by-pass valve it, therefore, also closes the switch contacts and lights the warning lamp on instrument panel, to give a visual warning to the operator that the filter element is being by-passed

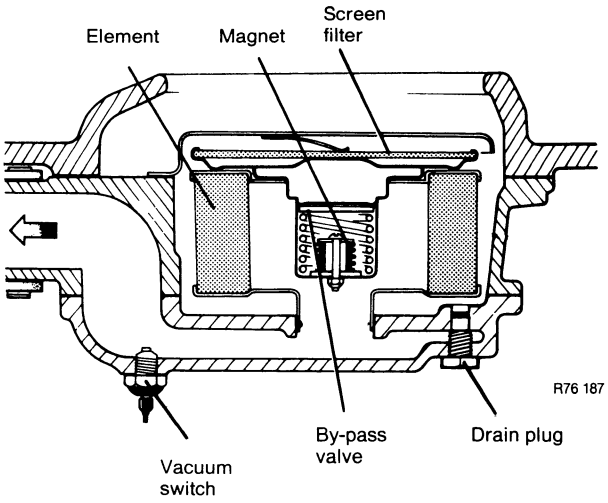

FIGURE 6
† FULL-FLOW SUCTION FILTER

Pump Relief Valve: Positioned underneath the main frame, the pump relief valve prevents damage to the pump by limiting pump output pressure to a safe figure

The small plunger is held firmly against the valve seat by the cap and spring When oil pressure inside system is sufficient to overcome spring tension, the plunger is pushed off its seat and allows oil to escape into reservoir. When system pressure falls the spring returns the plunger to its seat and cuts off the oil flow to reservoir

As the actual oil pressure required to unseat the valve plunger depends on the spring pressure, shims are fitted between cap and spring to adjust the valve operating pressure to the required setting

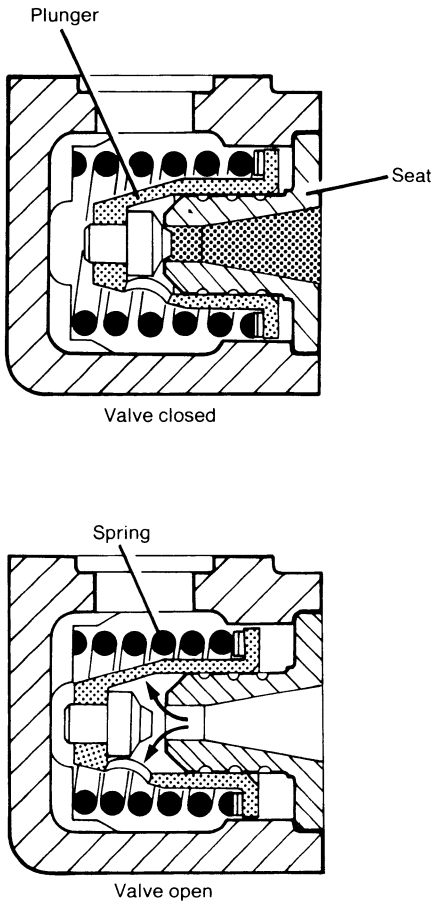

FIGURE 7 PUMP RELIEF VALVE

Pump Bleed Valve: To prevent the possibility of an air-lock occurring after the tractor has been standing for a long period an automatic bleed valve is fitted adjacent to the pressure relief valve.

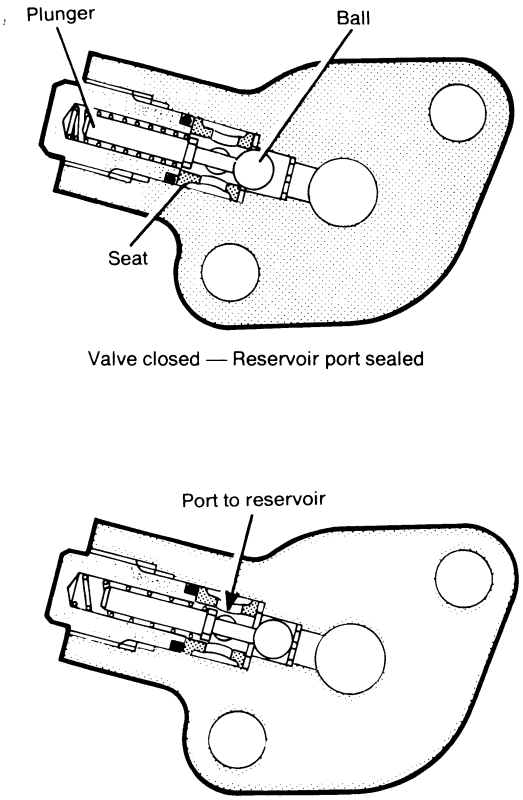

FIGURE 8 PUMP BLEED VALVE

The small steel ball is normally held off its seat by the spring-loaded plunger and the small port to the reservoir is therefore open. When the tractor engine is started the pump can bleed itself by pushing any air through the open vent port but immediately the pump is vented the flow of oil into the valve housing is sufficient to push the ball against the plunger spring until it seats and closes the vent port.

Full pump output then flows into the hydraulic system and the ball valve remains seated until the engine is stopped and oil pressure holding the ball on its seat is insufficient to overcome the spring tension

Oil Cooler: As its name suggests the purpose of this unit is to cool the transmission oil (which is also used for the tractor hydraulic system) so that its temperature does not exceed 50°C (127°F) above the ambient temperature, so protecting the system against excessive heat

The unit comprises two main parts, a cooler and a control valve The multi-tube cooler is mounted at the front of the engine radiator, where it is in the cool air stream to the engine fan The control valve is located on the pressure side of the hydraulic pump and comprises two valves, an isolating valve and a pressure controlled valve The isolating valve is a push-pull type manually operated valve When the valve is pulled 'out' the oil supply to the control valve is closed and the cooler is therefore out of circuit at all times

When the isolating valve is pushed 'in' oil is fed to the control valve, which can then open or close the oil feed through the cooler When the output pressure of the hydraulic pump is below 56kg/sq cm (800lb/sq in) the control valve by-passes some of the pump output through the cooler and into the pump inlet The cooler is thus in operation and at high engine speeds up to 11litres ($2\frac{1}{2}$gallons) of oil per minute can pass through the cooler

When pressure in hydraulic system reaches 56kg/sq cm (800lb/sq in), as occurs when Selectamatic control lever is placed in 'raise' position, the control valve is pushed against its spring by the oil pressure and oil flow to cooler ceases full pump output is then available to raise the linkage or attachment As soon as system pressure falls below 56kg/sq cm (800lb/sq in) the control valve is pushed open by its spring and oil circulation through cooler is restored

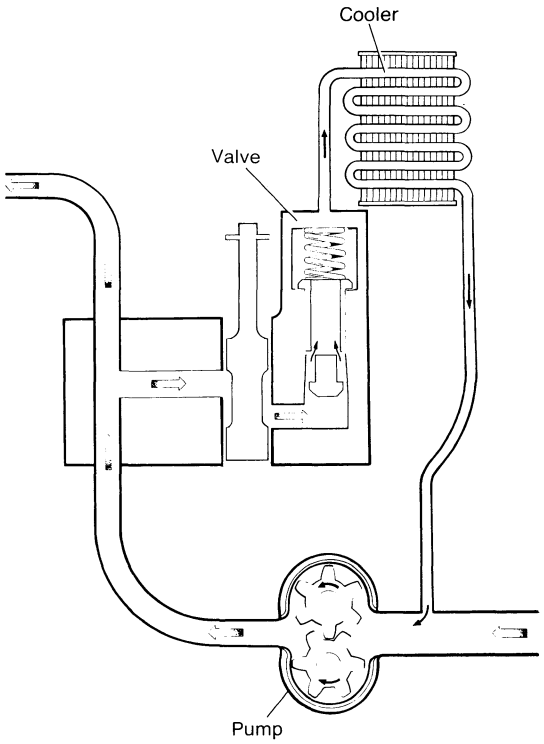

Low pressure — Control valve open

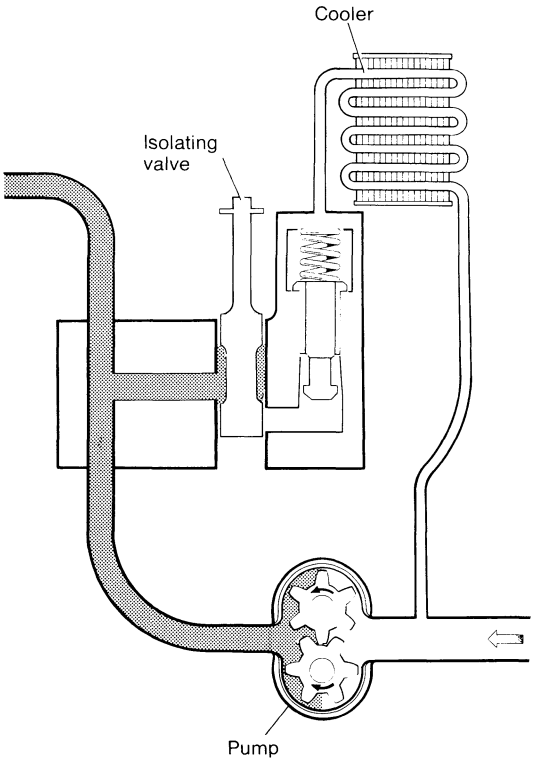

Isolating valve closed — cooler out of circuit

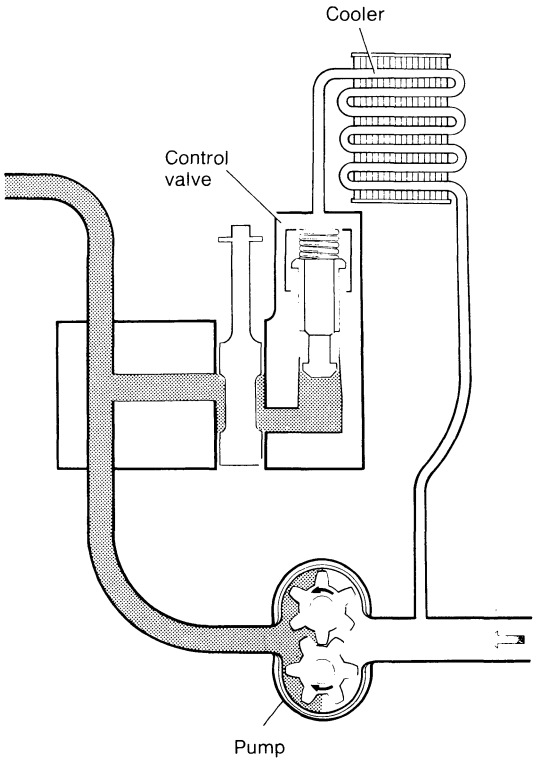

High pressure — Control valve closed

FIGURE 9 OIL COOLER

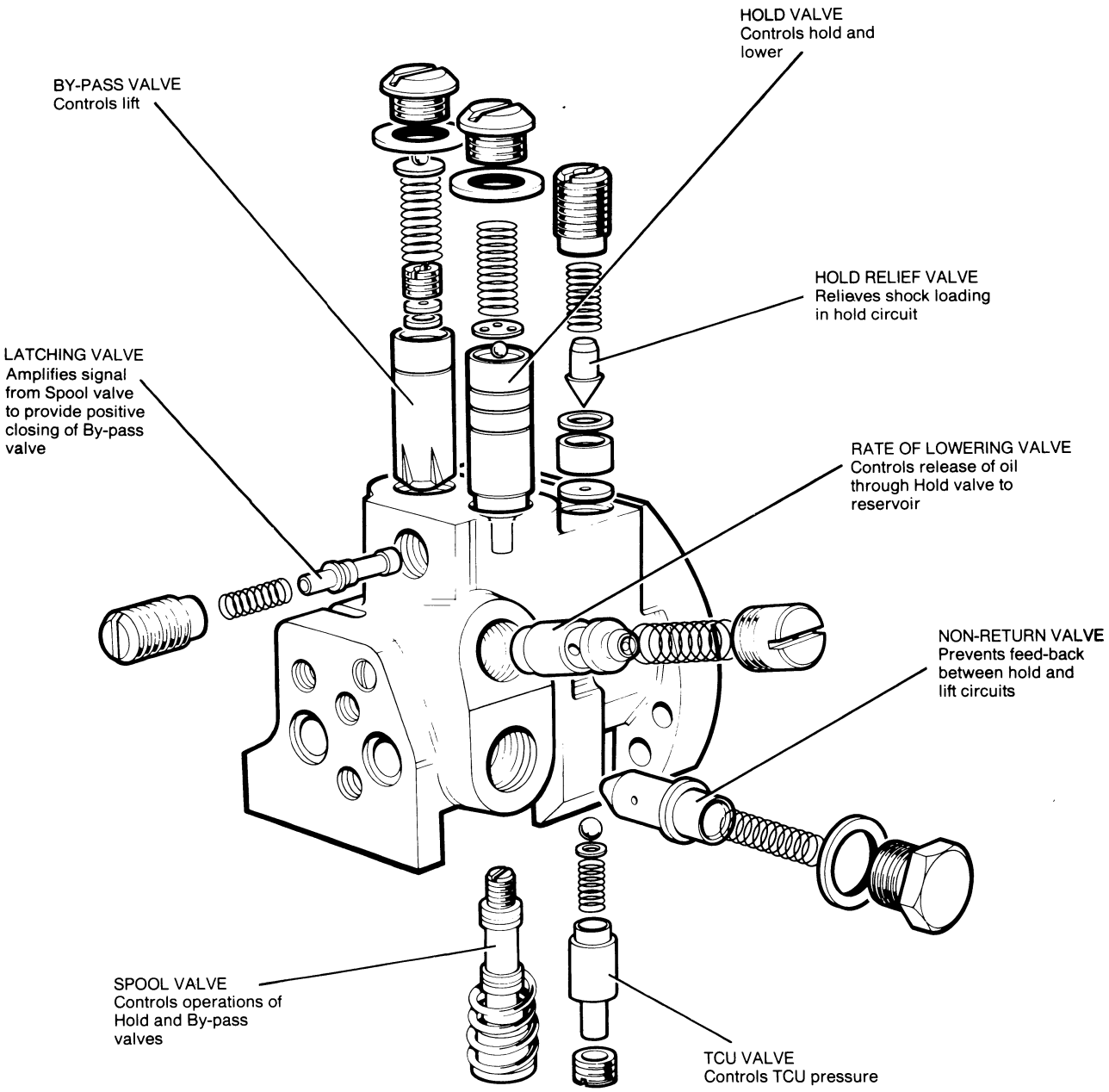

FIGURE 10 BASIC FUNCTION OF VALVES IN SELECTAMATIC VALVE ASSEMBLY

Selectamatic Control Valve: This is housed inside the right-hand side of the rear axle case and consists of a body containing eight valves

By-pass Valve Plunger is held closed by a light spring and has a small hole through its centre to enable oil to pass through plunger and, when upper chamber is sealed, build up equal pressure above and below plunger

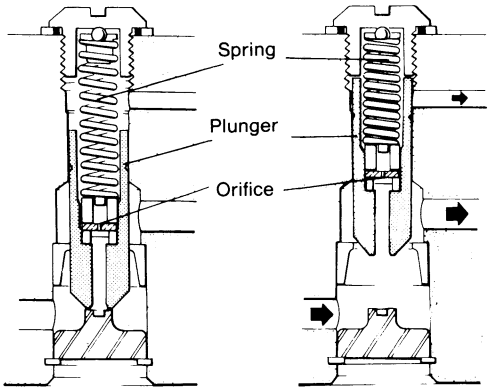

FIGURE 11 BY-PASS VALVE

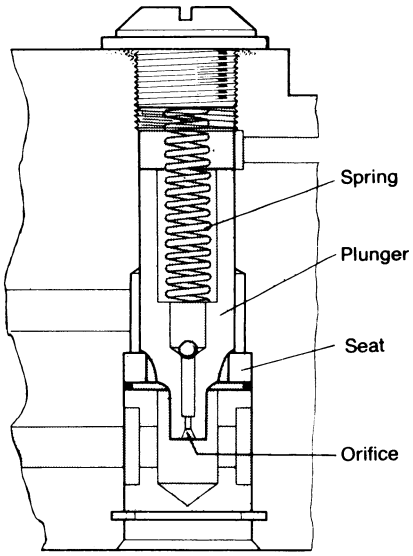

FIGURE 13 HOLD VALVE

Hold valve plunger is also held against its seat by a light spring and has a hole through its centre incorporating a simple non-return valve, so that oil can flow upwards into chamber at top of plunger but cannot flow in reverse direction

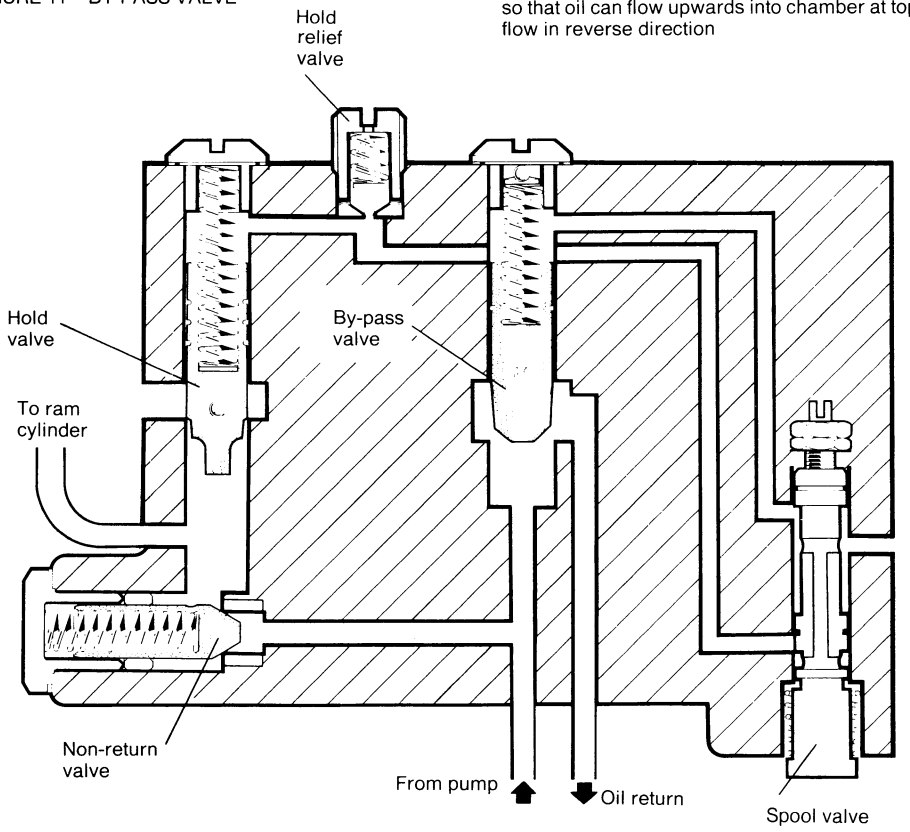

FIGURE 12 SPOOL VALVE

Spool Valve Plunger is spring-loaded so that when it is released, ports to both by-pass and hold valves are closed Both valve plungers are therefore held on their seats by their springs and pump output flows into ram cylinder to raise linkage.

When spool valve plunger is held in mid-position, port from hold valve remains closed, therefore hold valve remains seated, but port from by-pass valve is opened. Oil from top of by-pass plunger then drains to reservoir and as oil cannot flow through plunger orifice fast enough to maintain an equal pressure at top of plunger, oil pressure below plunger pushes against the light spring to lift plunger off its seat. Pump output then flows out of by-pass port and returns to reservoir: the linkage being held stationary by the oil trapped in the ram cylinder due to the hold valve plunger remaining on its seat

When spool valve plunger is pushed upwards ports from both by-pass and hold valve plunger are opened Oil above plungers then flows to reservoir and pressure below plungers pushes them off their seats Pump output then flows through by-pass port and oil from ram cylinders flows out through hold valve to lower the linkage.

Non-return Valve is situated between by-pass and hold valve ports. It allows pump output to flow into system when by-pass plunger is on its seat, but prevents oil escaping from hold valve port, and thus allowing linkage to lower, when by-pass plunger is raised off its seat.

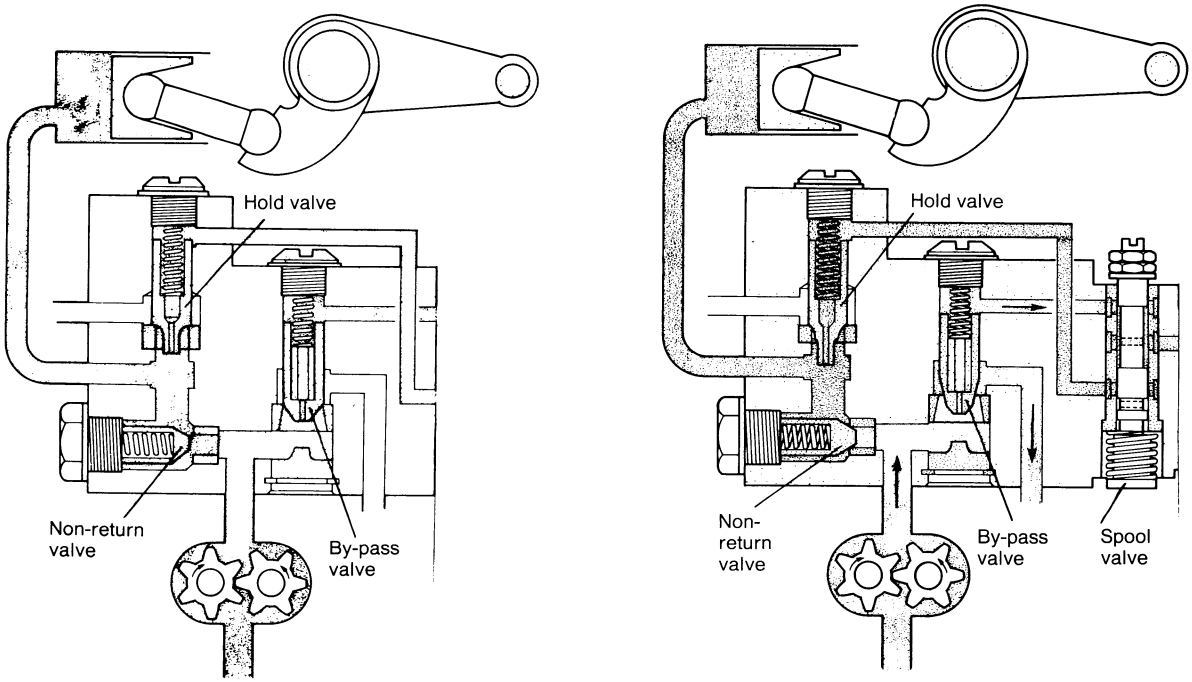

Linkage being raised — Valve open

Linkage held stationary — Valve closed

FIGURE 14 NON-RETURN VALVE

TCU Valve enables a regulated degree of back pressure to be built up in oil passing out of spool valve ports The same amount of back pressure then builds up on the top of by-pass and hold valve plungers, which causes the plungers to move towards their seats until an equal amount of back pressure builds up below the plungers. The resulting rise of pressure below plungers is also transmitted to the ram cylinder which gives a partial lifting effort to the linkage for weight transference (traction control) purposes

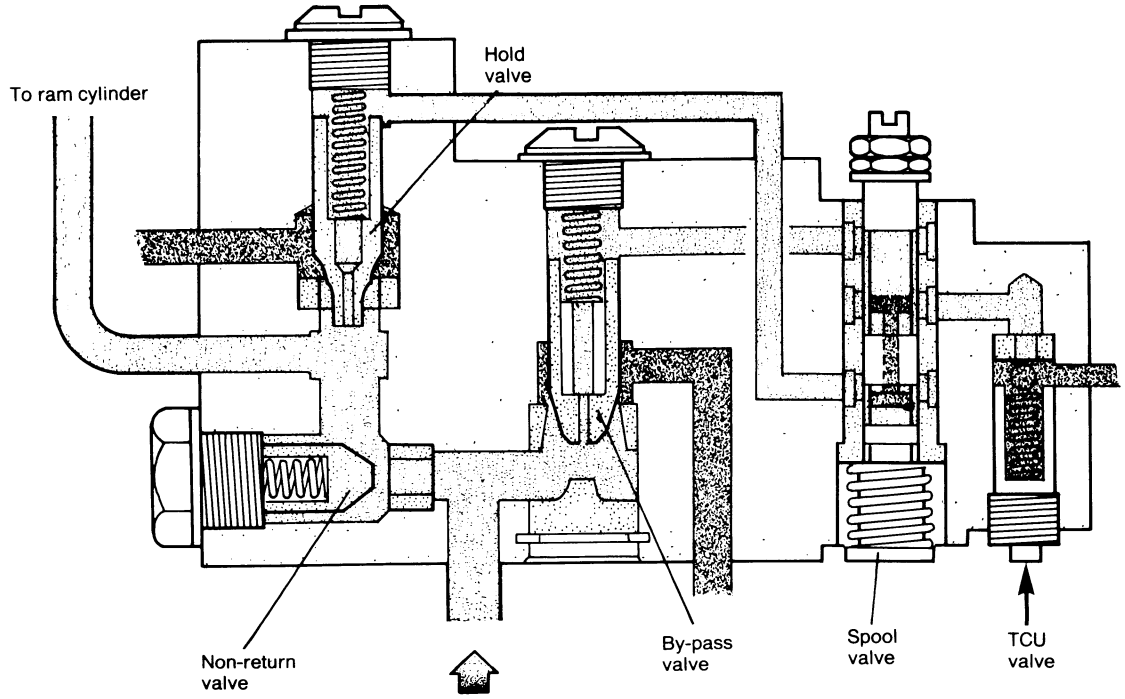

FIGURE 15 TCU VALVE

Pressure Relief Valve is connected to the chamber at top of hold valve plunger so that if oil pressure in system rises excessively, as would occur if tractor is driven over rough ground at high speed with a heavy implement supported on linkage, relief valve will be pushed open The higher pressure below plunger will then push plunger off its seat and allow oil to escape from system until pressure is reduced to a safe figure.

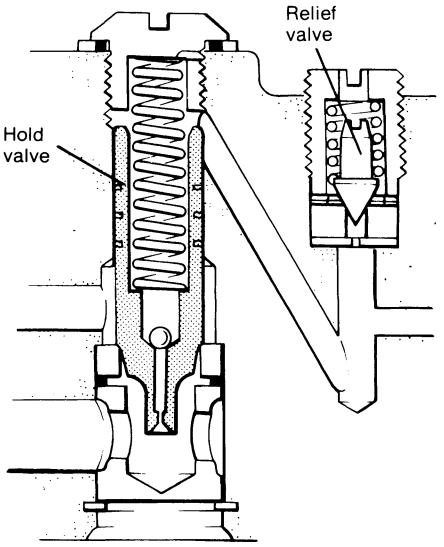

Relief valve — closed

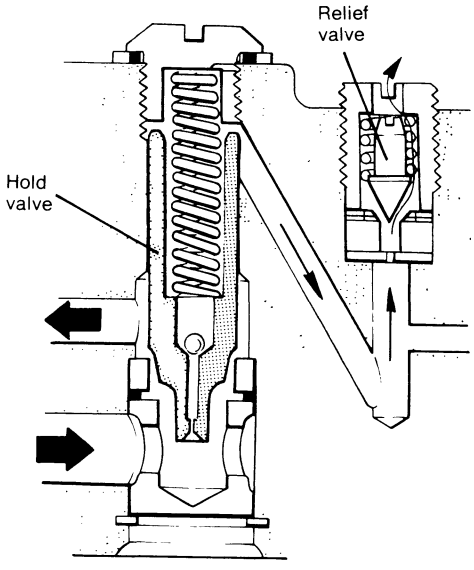

Relief valve — open

FIGURE 16
HOLD PRESSURE RELIEF VALVE

Latching Valve is in the circuit between chamber at top of by-pass valve and spool valve and the purpose of this valve is to make the by-pass valve plunger very sensitive to small movements of spool valve plunger If spool valve is only moved by a small amount the latching valve is then closed by the small amount of back pressure and causes by-pass plunger to be pushed quickly on to its seat This avoids the possibility of the by-pass plunger reaching a balanced condition with the oil pressure above being insufficient to push plunger fully on to its seat and placing the pump under an unnecessary load.

The latching valve therefore gives the by-pass valve quick response to small spool valve movement as this rapid response is not required when using TCU (weight transference) a drilling from the TCU valve allows pressure to be applied on the spring side of the latching valve. Closing the TCU valve does not therefore operate the latching valve as equal pressure is applied to both sides, enabling the spring to hold the valve in the full open position

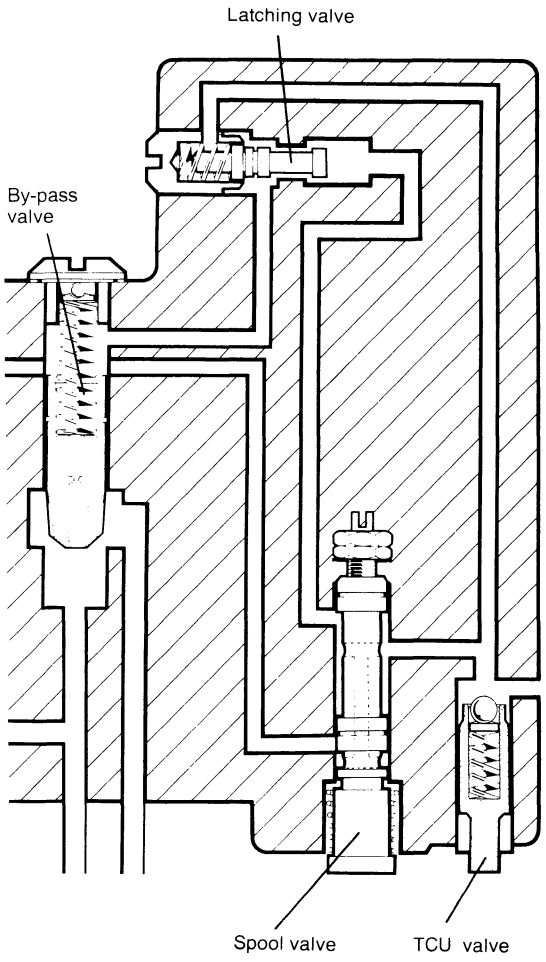

FIGURE 17 LATCHING VALVE

Rate-of-Lowering Valve controls the flow of oil coming out of the hold valve port, valve plunger is spring-loaded towards the end of its bore and back pressure of oil tends to push plunger against its spring and therefore closes ports admitting oil into plunger. Any change in back pressure caused by repositioning the control needle will make a corresponding change in position of valve plunger.

The position of valve plunger and therefore opening of lowering port, is thus controlled by the position of the lowering control needle. The valve spool automatically compensating for any difference in weight of implement, by regulating the amount of port opening to give a constant flow of oil out of the system.

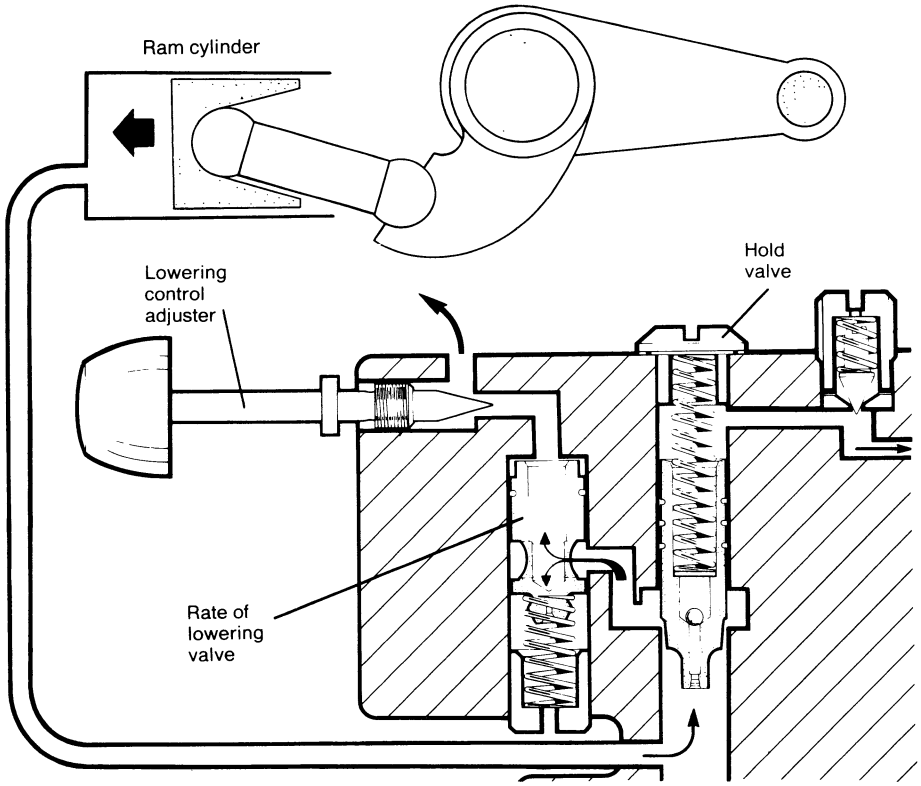

FIGURE 18 RATE OF LOWERING VALVE

Selector Dial Pointer: Selection of the method of operation, i e.: depth control, height control or TCU/EXT, is by means of the dial pointer on right-hand ramshaft bracket.

When in depth control, movement of the sensing unit must be transmitted to the spool in the Selectamatic valve, any variation in implement depth will then result in the spool valve being moved to counteract the change and restore the original depth. This is obtained by positioning the valve rocker lever under the depth control push rod so that movement of the push rod, which is connected to the sensing unit by flexible cable, also moves the valve spool.

The rocker lever does however, remain under the height control push rod so that when the linkage reaches full height, the ramshaft cam pushes the valve spool into the 'hold' position and relieves the pump of unnecessary load.

Turning the dial pointer from 'depth' to 'height' slides the rocker lever sideways so that the rocker heel is clear of the depth control push rod but under the height control push rod. The sensing unit is therefore, disconnected from transmitting any movement to the spool valve. As the height control push rod is in contact with the ramshaft cam any ramshaft movement will also move the push rod which in turn will move the rocker lever and valve spool. The position of the ramshaft can thus be set by the control lever and any subsequent linkage movement will then be restored automatically, by the spool valve being moved sufficient to correct the linkage movement.

Turning dial pointer into TCU/EXT slides the rocker lever further sideways so that front end of rocker rides on to abutment plate. Rocker therefore, pivots on this plate and control lever can be moved to 'raise', 'hold', 'lower' or 'TCU' position.

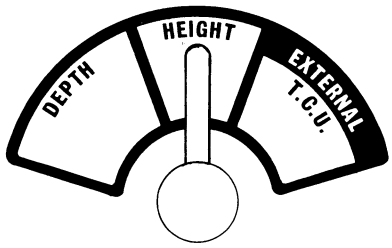

FIGURE 19 SELECTOR DIAL POINTER

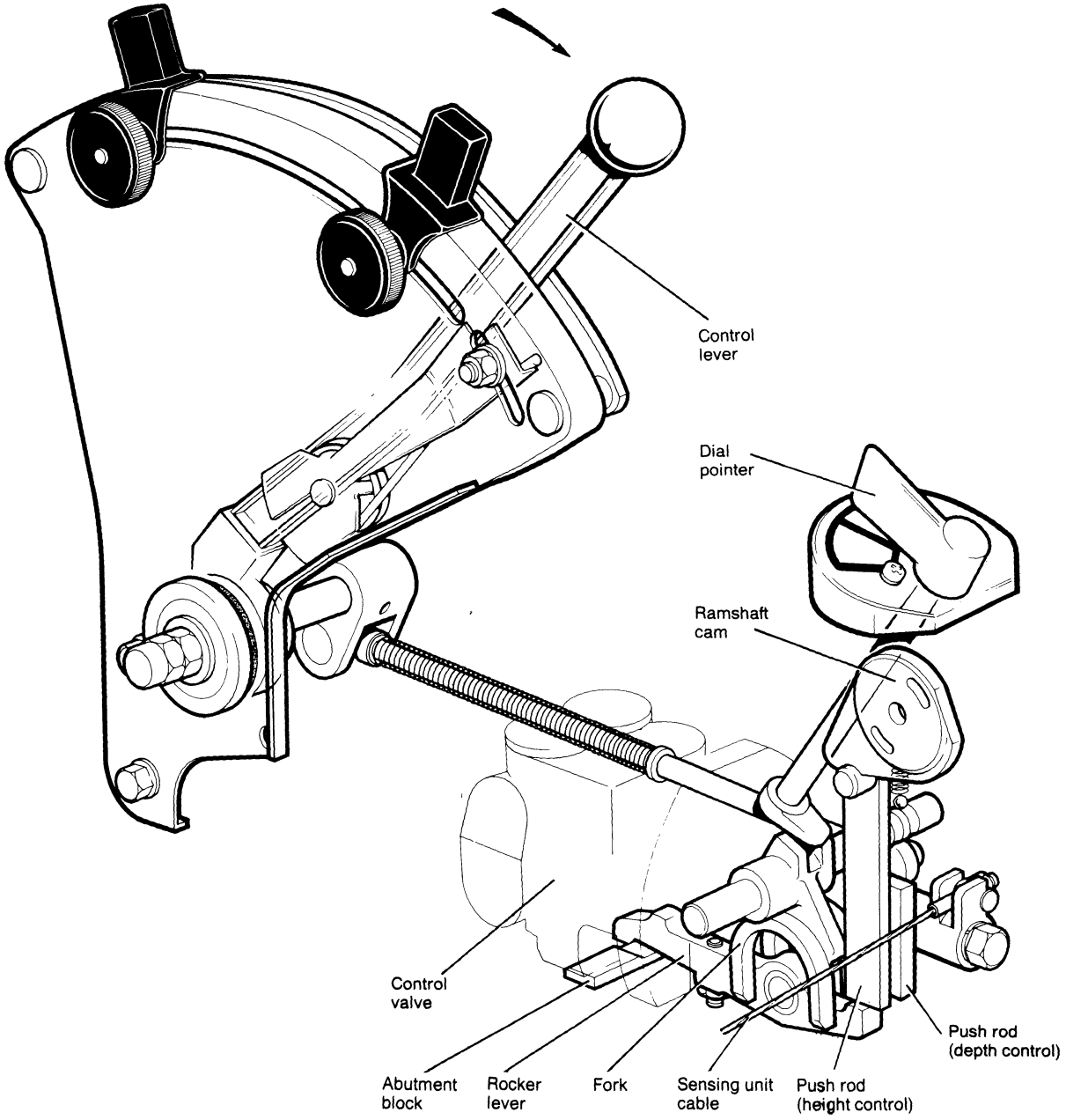

FIGURE 20 DIAL POINTER MECHANISM

Traction Control: This is the Case's method of increasing wheel grip (traction) by transferring weight from the implement on to the tractor. The additional weight on the tractor then acts as ballast and reduces wheel slip.

When a tractor has a mounted implement raised on its hydraulic linkage the full implement weight is being supported by the tractor and the weight on the tractor rear wheels will be the normal tractor rear-wheel weight plus the implement weight; as the centre of gravity of the implement is not of course directly over the tractor rear wheels but some distance behind, the implement will when raised, have a leverage effect and add more weight on the tractor rear wheels than the actual implement weight.

When the implement is lowered into work the tractor rear-wheel weight will return to its normal unloaded weight and the weight of the implement will rest on its own depth wheel. As wheel-grip depends on rear wheel weight it will be seen that this is at maximum when implement is raised and minimum when it is in work. This is exactly opposite to what is required, for maximum wheel-grip is needed when implement is in work and requires a considerable draught to pull it through the ground.

The implement is raised out of work by oil pressure in the ram cylinder. The actual oil pressure required to raise the linkage depends on the implement weight and also the geometry of the linkage but whatever the pressure is, if less than this pressure is applied in the ram cylinder the implement will not be raised. The effect of having pressure in the ram cylinder will however, be to exert an upward, or lifting, force on the implement and whilst this will be insufficient to raise the implement it will also push downwards on the tractor with an equal force. The force pushing the tractor downwards will push the tractor rear wheels harder on the ground in exactly the same way as when raising the implement, the extra weight on the tractor rear wheels will not be the full implement but only a portion of it and this will make a very useful form of ballast.

The amount of ballast obtained in this way is called weight transference, because weight is transferred from implement to tractor rear wheels, and is determined by the oil pressure in the ram cylinder; if the pressure is reduced the amount of weight transference is reduced until the pressure reaches zero, when no transference takes place. This gives an advantage over fixed ballast in that only the required amount of weight transference need be used and this is instantly available by just pushing the control lever forward. The TCU valve is then held on its seat and gives the required amount of back pressure in the ram cylinder.

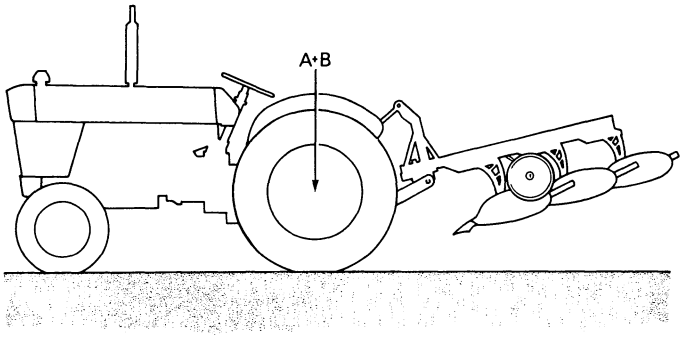

TRACTOR WITH IMPLEMENT RAISED ON LINKAGE
Weight on rear wheels equals tractor rear wheel weight 'A' plus weight of implement 'B'

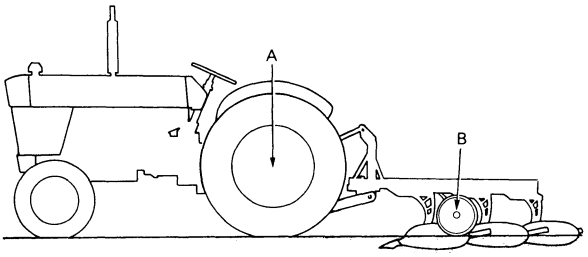

TRACTOR WITH IMPLEMENT LOWERED AND NO PRESSURE IN HYDRAULIC SYSTEM
Weight on rear wheels 'A' is tractor rear wheel weight only. Weight of implement 'B' resting on its own depth wheel

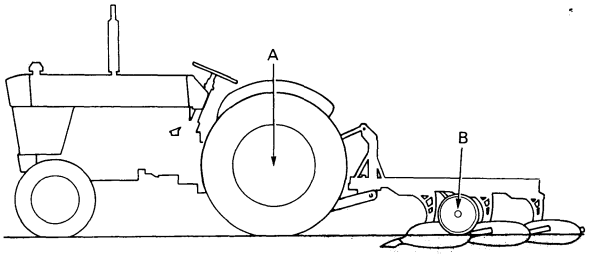

TRACTOR WITH IMPLEMENT LOWERED AND REDUCED PRESSURE IN HYDRAULIC SYSTEM
Weight on tractor rear wheels 'A' equals tractor rear wheel weight plus a proportion of implement weight 'B'

FIGURE 21 WEIGHT DISTRIBUTION OF TRACTOR WITH MOUNTED IMPLEMENT

Ram Cylinder is housed inside left-hand side of rear axle case. When Selectamatic valve connects pump output into ram cylinder the oil pressure rises rapidly until there is sufficient pressure against piston to push piston along cylinder. The piston then turns ramshaft via connecting link and ramshaft arm, to raise the linkage. When by-pass valve is opened pump output is returned to reservoir, ram cylinder piston therefore remains stationary, hold valve and non-return valves preventing any oil passing out of cylinder.

When hold valve is raised off its seat weight of implement pushes piston, via ramshaft arm and connecting link, along cylinder and forces oil out of cylinder through hold valve and rate of lowering valve.

On 12 Series tractors the ram cylinder cover incorporates a locking latch. As piston reaches end of its stroke, ramshaft arm passes end of the locking pin and if pin is released into engaged position, arm will be locked to hold linkage in raised position.

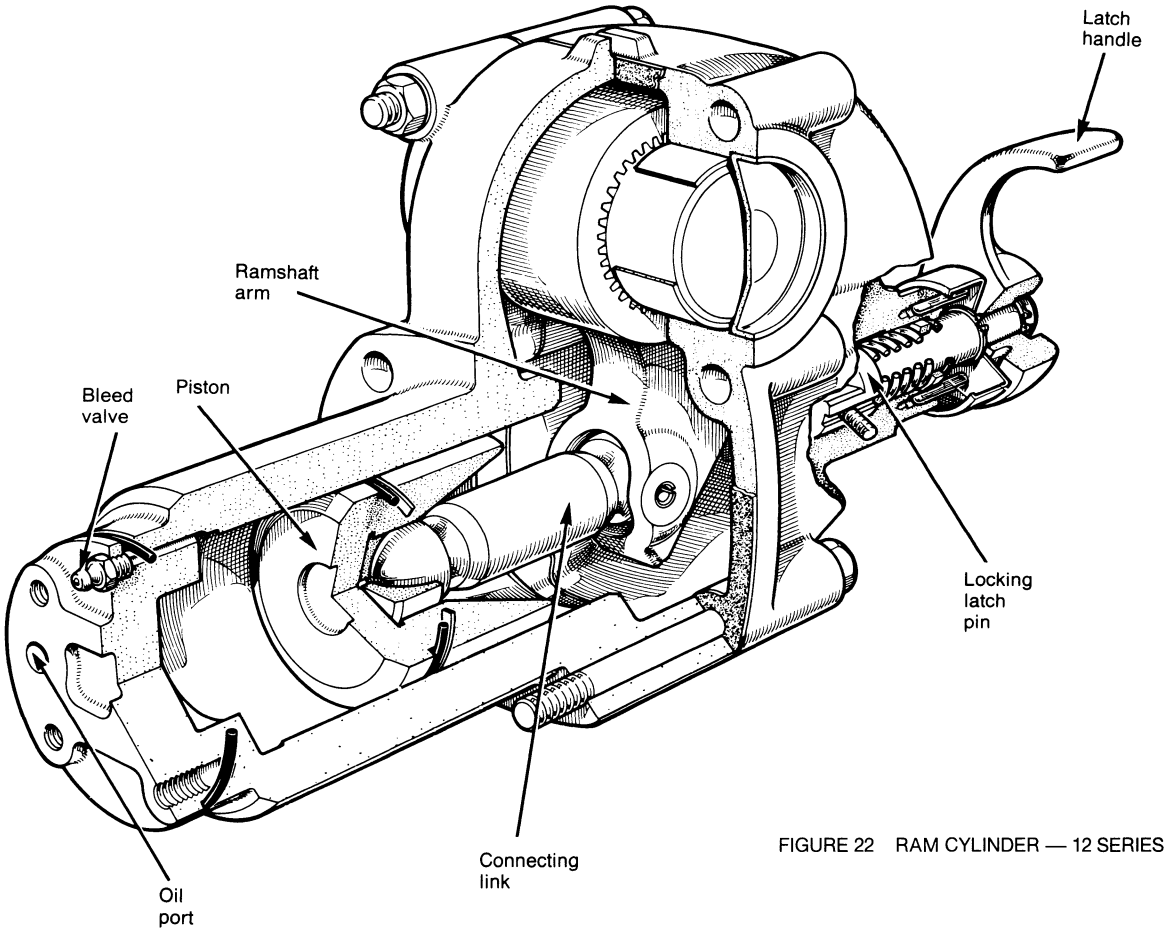

FIGURE 22 RAM CYLINDER — 12 SERIES TRACTORS

Linkage Support Ram: This is an additional ram cylinder which is fitted to 1200 Series tractors when exceptionally heavy implements have to be supported on the linkage. Mounted on the right-hand side and bolted to the drawbar frame, the ram is connected to port 1 on the three-way take-off valve. When the take-off valve control lever is placed in position L/1 both internal ram cylinder and support ram are connected together. Both rams therefore operate together, the support ram operating directly on the right-hand ramshaft lever and the internal ram cylinder operating in its normal way.

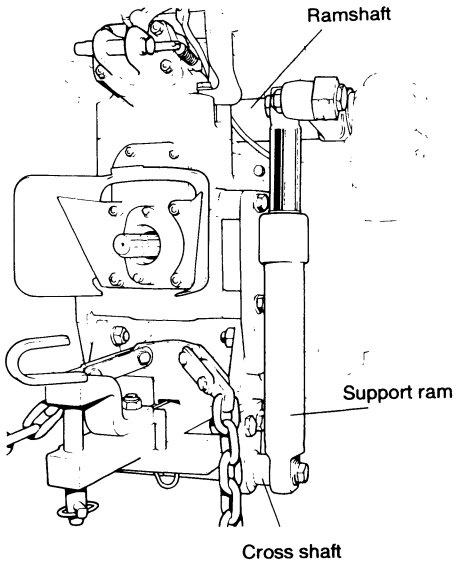

FIGURE 23 LINKAGE SUPPORT RAM
(12 Series tractors)

Sensing Unit: When an implement such as a plough is in work it requires an effort, which is called draught, to pull it through the ground The actual draught required depends on many factors, such as the number and width of the furrows and the ground conditions but whatever the draught of an implement is, it must increase with the operating depth. If the depth is increased, the amount of work done by the plough is increased therefore there is a corresponding increase in the work done by the tractor, which has to pull harder to combat the increased draught. As the only connection between tractor and plough is by means of the three-point linkage the implement draught is transmitted through the three links Due to the linkage being positioned above the plough bodies the plough tends to pivot forward as it is pulled through the ground.

The plough cannot actually pivot forward because the top link will resist any pivoting force by holding the headstock away from the tractor. The amount of force required to hold the headstock away from the tractor depends on various factors such as type of plough and operating conditions but whatever the force is, it will be at a minimum when shallow ploughing, which requires a light draught, and maximum when plough at full depth and, therefore, requires greatest draught. The tendency for the plough to pivot forward and compress the top link is therefore a guide to the operating depth of the implement, for as implement depth increases the amount of compression in top link will increase. If top link is not therefore rigidly attached to tractor, but connected to a spring-loaded attachment point the amount of compression, and therefore depth of implement will be 'sensed' by this attachment point, which will compress the spring according to the implement depth.

The sensing unit therefore 'senses' the implement depth, by responding to changes in top link compression, and counteracts this by moving the Selectamatic control valve, via a flexible cable, to raise, or lower, the linkage and thus maintain a constant operating depth.

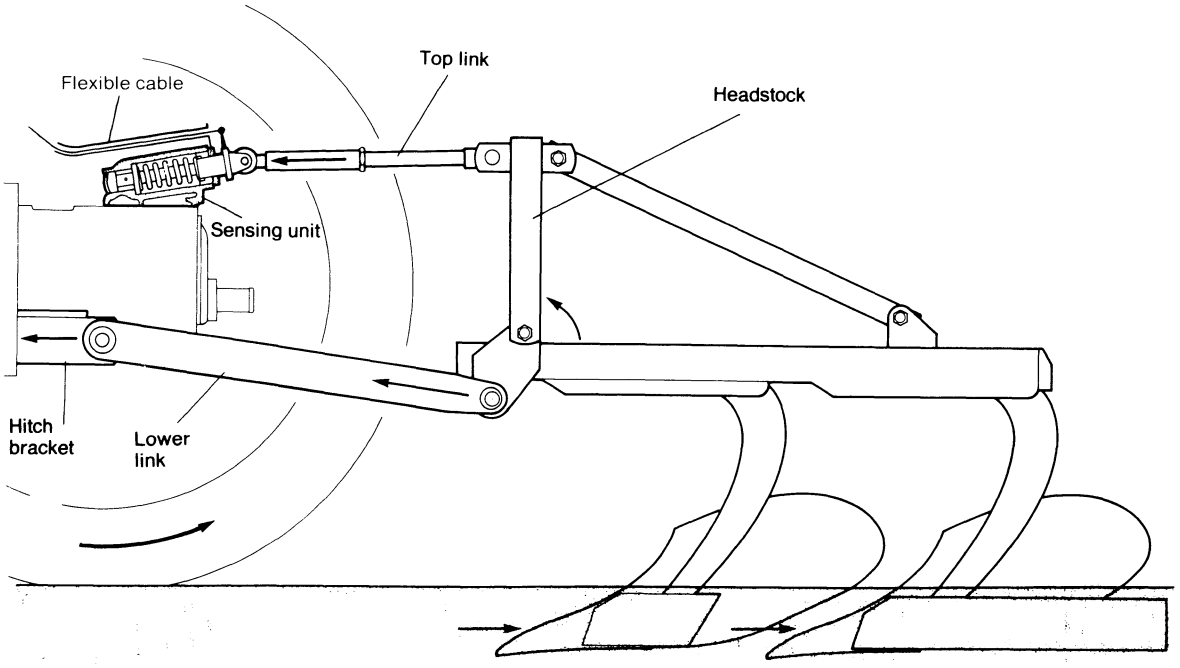

FIGURE 24 LINKAGE FORCES WHEN PLOUGHING

Adjustable Sensing Unit has four ranges of operation. These are obtained by varying the leverage between the top link and spring; for light draught implements a greater leverage allows the smaller forces to compress the sensing spring and a further three steps of reduced leverage enables higher draught implements to be 'sensed' by the same spring.

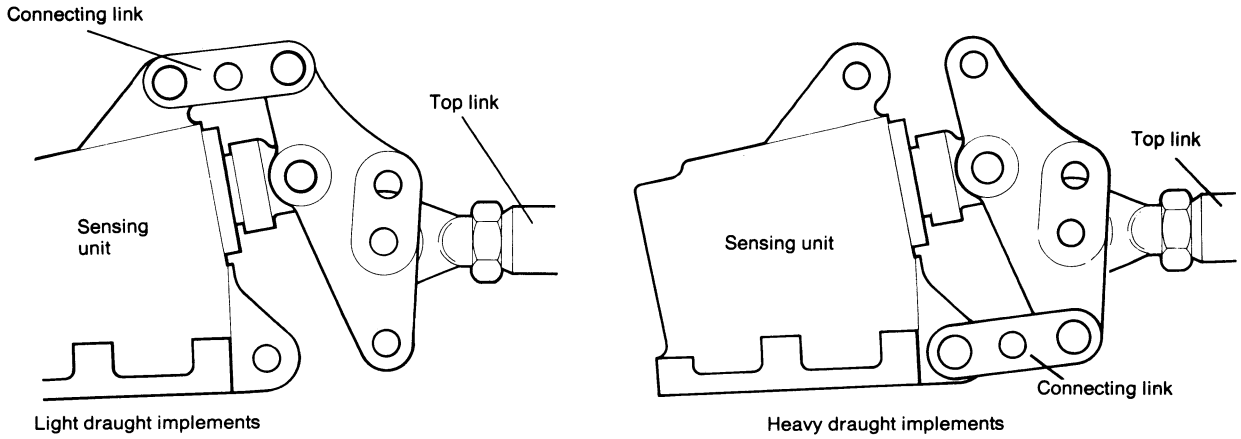

FIGURE 25 ADJUSTABLE SENSING UNIT

Selective Sensing Unit is fitted with two springs of different strengths When the spring support is turned so that it is clear of thrust washers at both ends of support, both springs are in operation but when support is turned so that shoulders on end of support are not opposite slots in thrust washer the spring at that end of support cannot then be compressed and only the remaining spring is in operation.

By turning the sleeve into any of its three positions the strong, light or both springs can be brought into operation to give 'sensing' for heavy, medium or light draught implements.

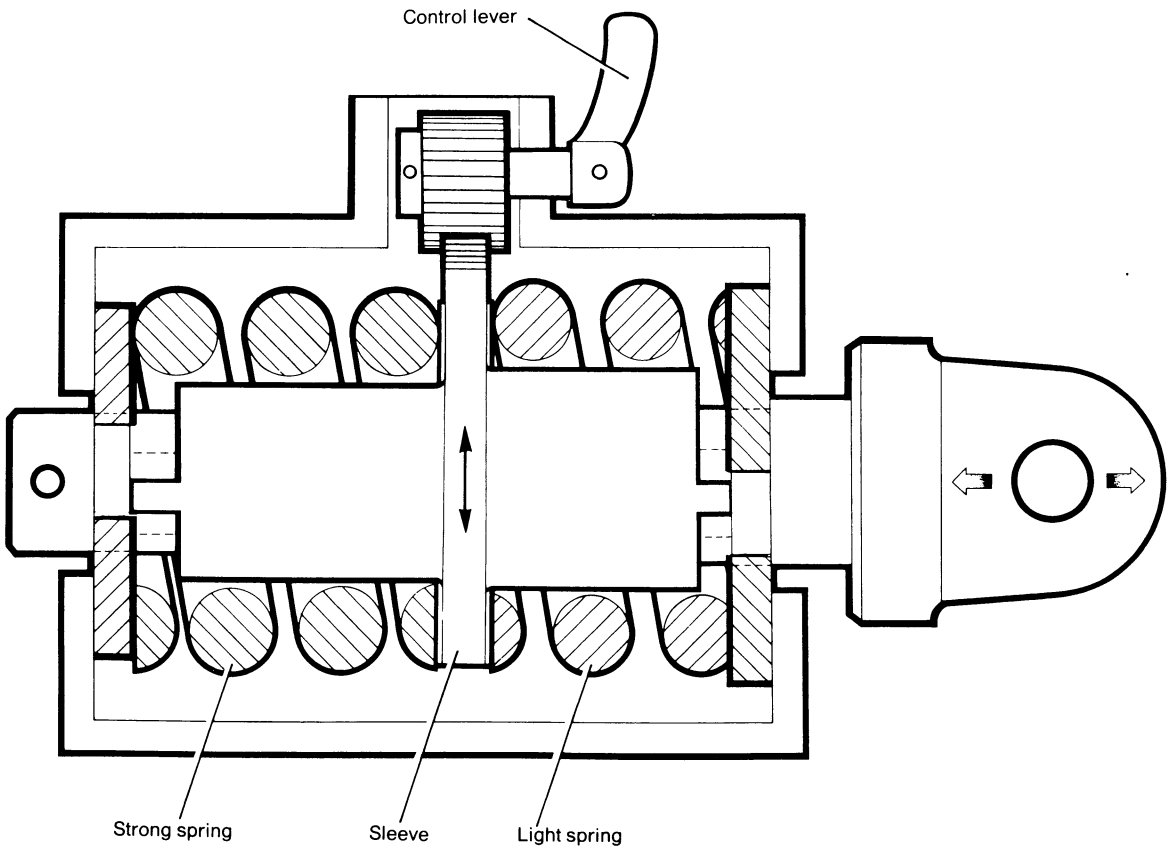

FIGURE 26 SELECTIVE SENSING UNIT

† **Three Point Linkage:** This is the connecting linkage between the tractor and the implement The implement is lifted by two non-adjusting lower links The lower links are raised by the ramshaft, which is connected to the links by two lift rods Both lift rods can be adjusted The left hand lift rod is adjusted to give the lower links the necessary height range A levelling lever is fitted to the right hand lift rod This is used to level the implement when in work The top link can also be adjusted It is used to hold the implement at the correct angle when in work The top link is connected to the sensing unit, which controls the depth of the implement when in work

† **Stabiliser Bars:** There are two different stabiliser bars available, the rigid type and the telescopic type They are used to keep the lower links in position when using an implement The stabiliser bars are fastened to the lower links at point A and to the reduction case at point B

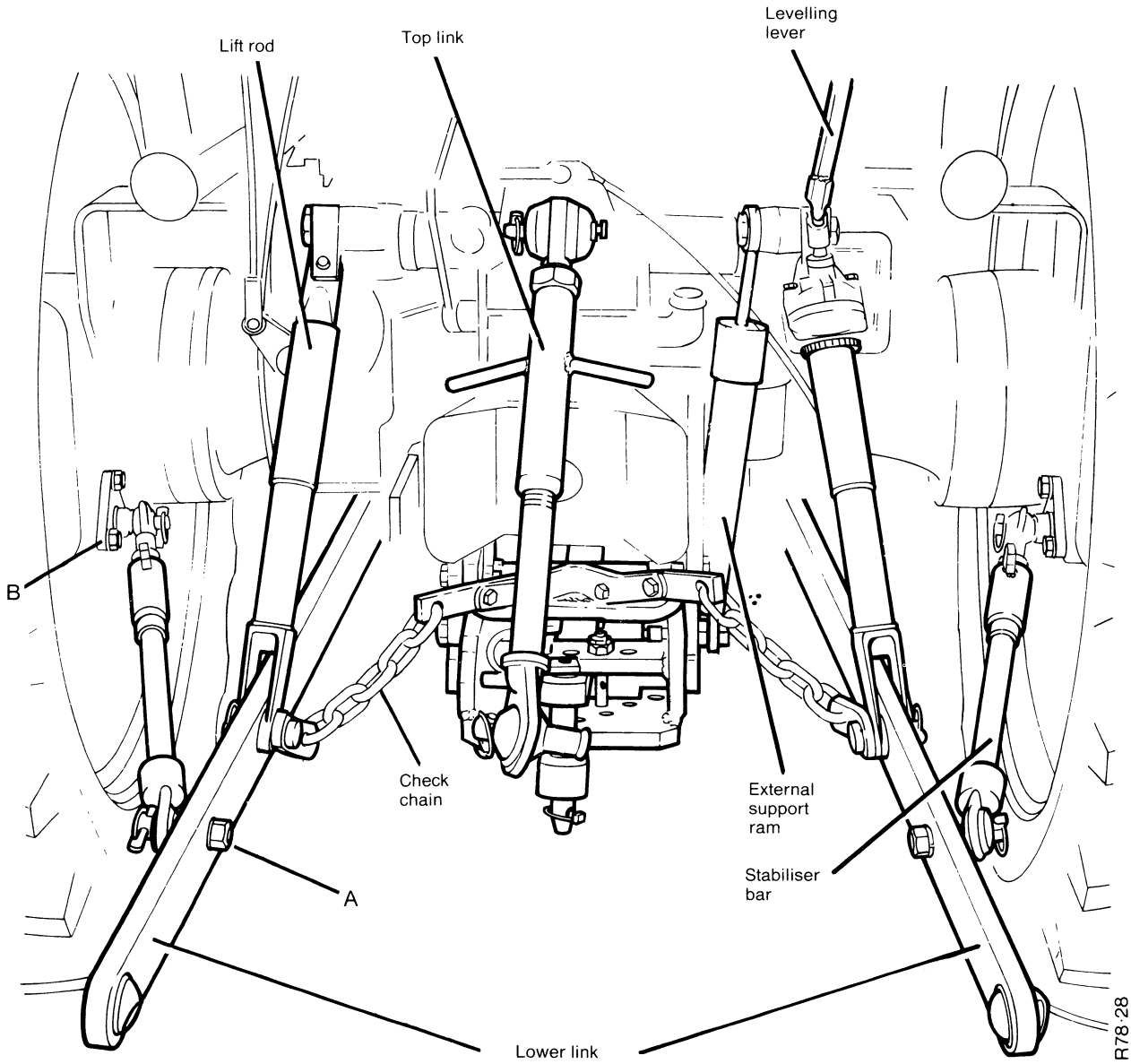

† FIGURE 27 TRACTOR LINKAGE

The rigid type stabiliser can be adjusted by turning the stabiliser screw The telescopic stabiliser can be adjusted by turning the ball housing An implement can be installed or removed without making any adjustment to the telescopic stabilisers. Rigid stabilisers must be adjusted to install or remove an implement

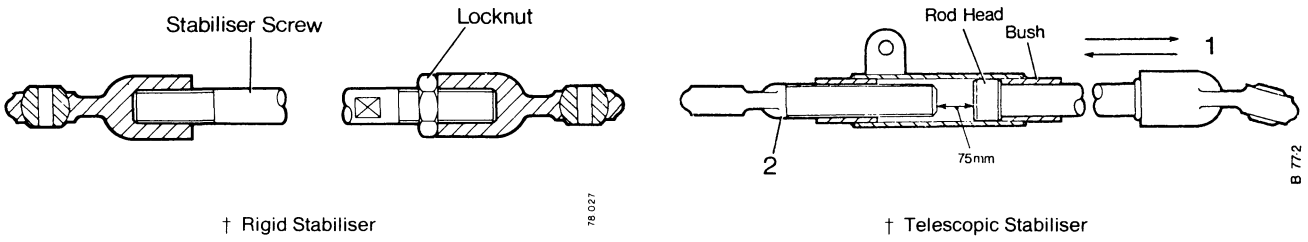

† Rigid Stabiliser

† Telescopic Stabiliser

FIGURE 27b STABILISER BARS

† **Dump Valve:** On 14 series tractors the dump valve is connected to the front end of the ram cylinder. When the knob is pushed down, the dump port is closed. With the dump valve in this position the hydraulic system will work normally When the knob is pulled up, the dump port is open Oil from the ram cylinder will now flow through the dump port and past the dump valve The oil pressure in the ram cylinder will decrease and the linkages will lower rapidly The oil does not have to flow through the control valve. The lever for the control valve can therefore be in any position Little or no weight is needed on the linkage, to lower the linkage when the dump port is open

On 12 series tractors the dump valve is positioned over the hold valve. When the knob is pushed down, the spring in the hold valve is put in compression. The hold valve will now work normally. The knob must be turned to keep the spring in compression. To use the dump valve, turn the knob and pull up. This will release the spring. The pressure of the oil from the ram cylinder will now lift the valve off its seat. The linkage will lower rapidly with little or no weight on the linkage.

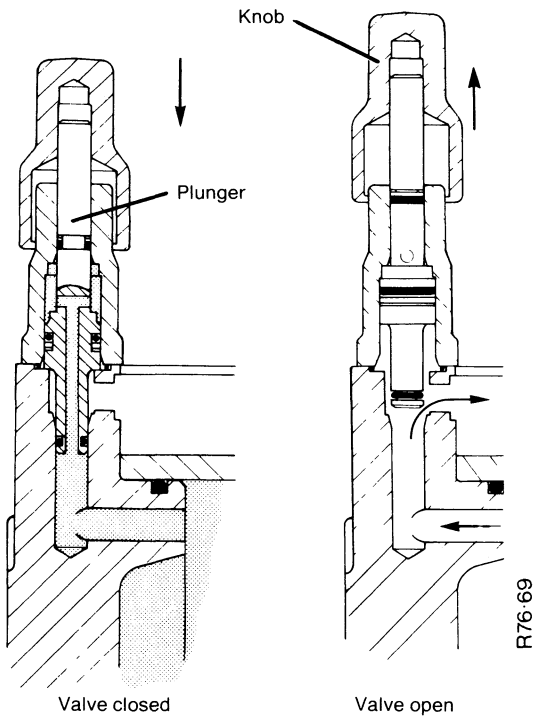

Valve closed Valve open

FIGURE 28
DUMP VALVE — 14 SERIES TRACTORS

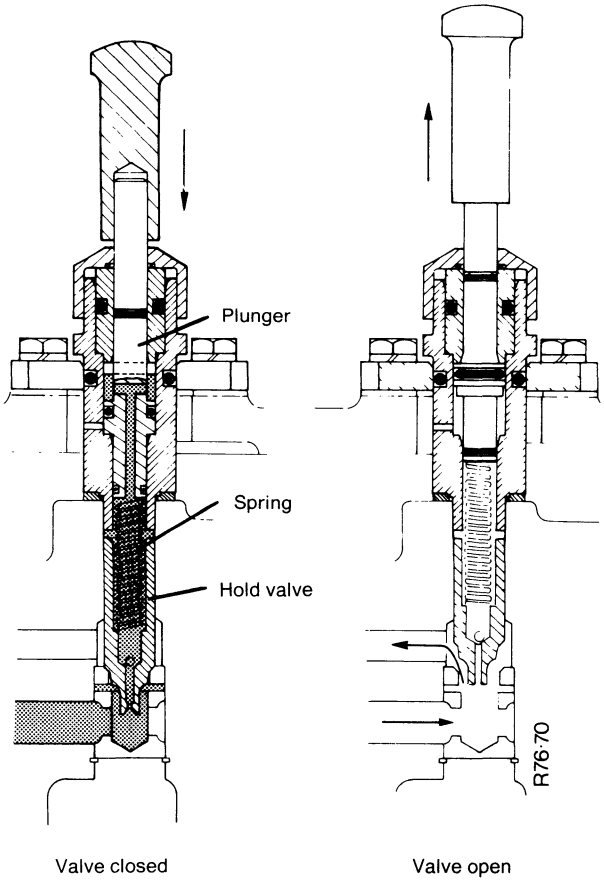

Valve closed Valve open

FIGURE 29
DUMP VALVE — 12 SERIES TRACTORS

Three-way Take-off Valve: Fitted on the front end of the ram cylinder — in place of the connector — this valve enables the oil flow from pump to be diverted from ram cylinder to either of the two take-off points.

The valve control lever operates a spool which has four positions. When spool is pushed down, inlet port in valve body is connected to upper take-off point and when spool is moved up into second position inlet port is connected to lower take-off port. When spool is moved into third position valve inlet port is connected into ram cylinder and both take-off ports are closed. Tractor linkage then operates normally and any equipment connected to the take-off ports is held stationary. Moving spool valve fully upwards connects valve inlet port to both ram cylinder and upper take-off port: any equipment connected to this port will then operate simultaneously with the tractor linkage.

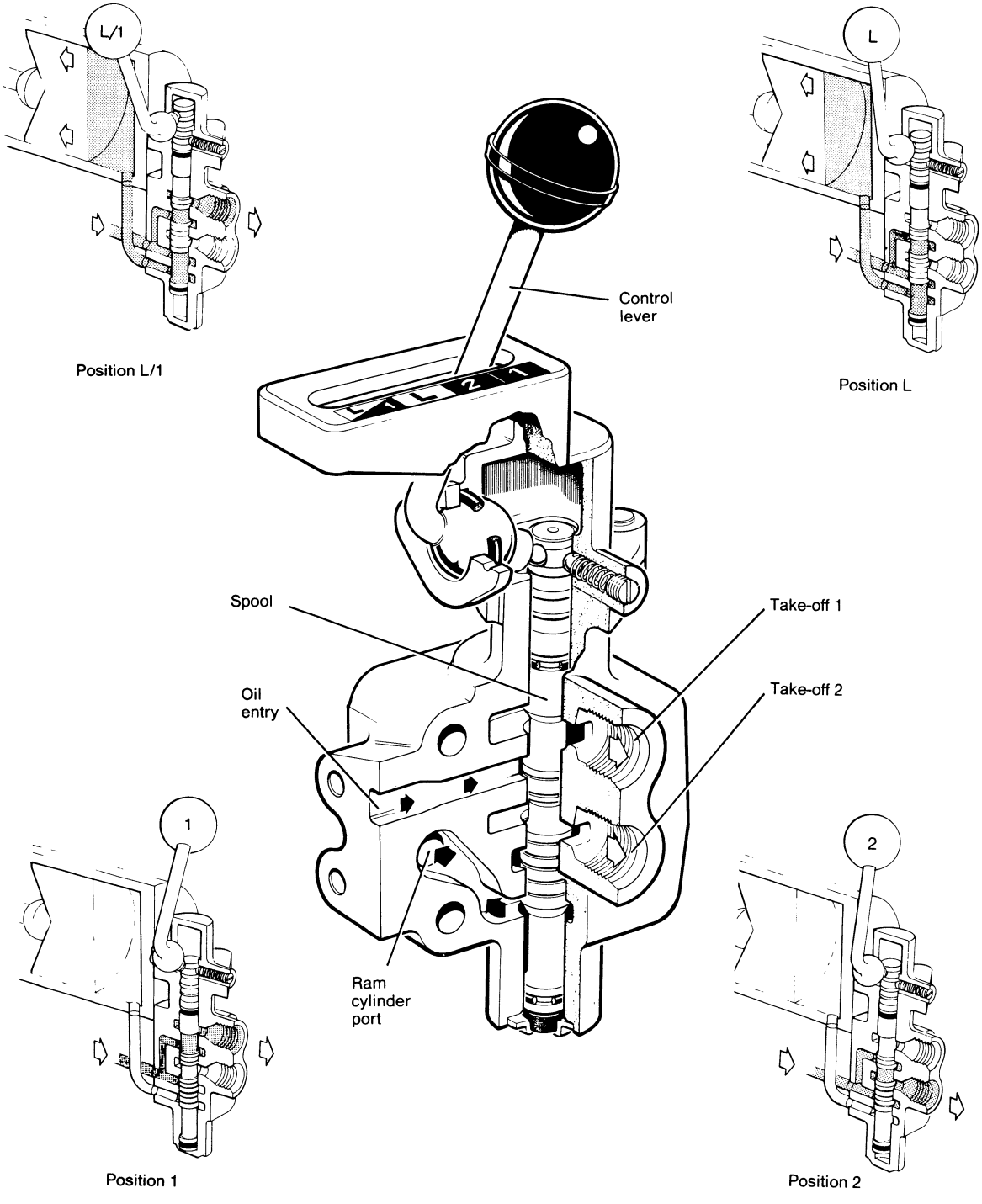

FIGURE 30 THREE-WAY TAKE-OFF VALVE

Double-acting Live Take-off Valve: This valve fits on right-hand side of rear axle case and provides a double-acting (i e. oil pressure and also oil return) take-off point which is 'live' whenever pump is in operation regardless of position of Selectamatic control lever

If two double-acting take-off points are required a second valve can be bolted directly on top of first valve

When valve lever is in its central (neutral) position pump output flows into the Selectamatic valve and oil flow to both ports is sealed. The tractor hydraulic system therefore, functions normally and any equipment connected to the take-off is held stationary

Moving valve lever forwards diverts pump output from Selectamatic valve and directs it to take-off port 'A', at the same time take-off port 'B' is connected to oil return pipe to reservoir.

When valve lever is moved rearwards the oil flow is reversed, port 'A' being oil return and 'B' the pressure supply Equipment incorporating double-acting rams can thus be operated by moving valve lever either way to give the direction of motion required

When valve lever is moved its full distance in either direction the spring-loaded detent holds the lever in this position until ram cylinder on equipment reaches end of its travel and oil pressure in system rises sufficiently to operate the automatic release This causes valve to 'kick-out' automatically and lever returns to the neutral (central) position

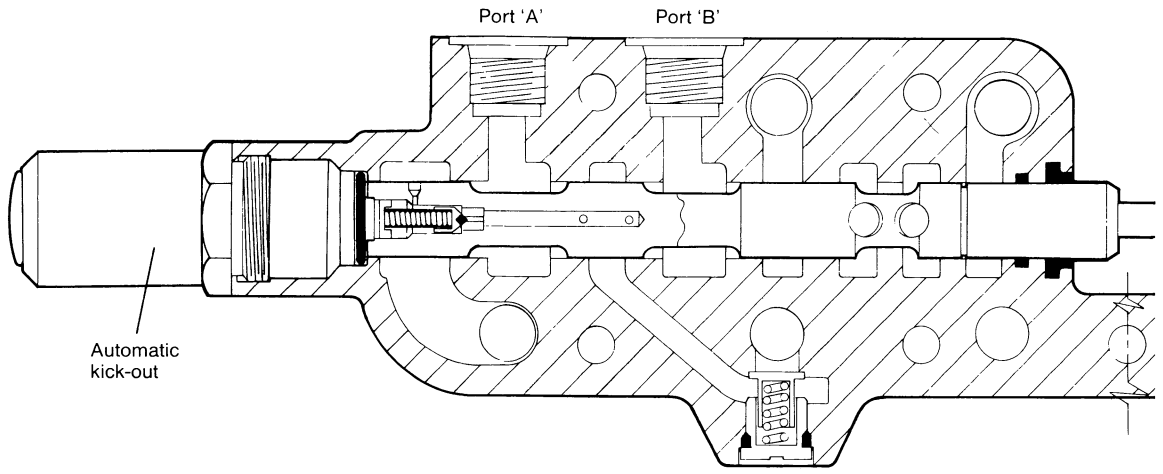

SPOOL IN NEUTRAL (CENTRAL) POSITION

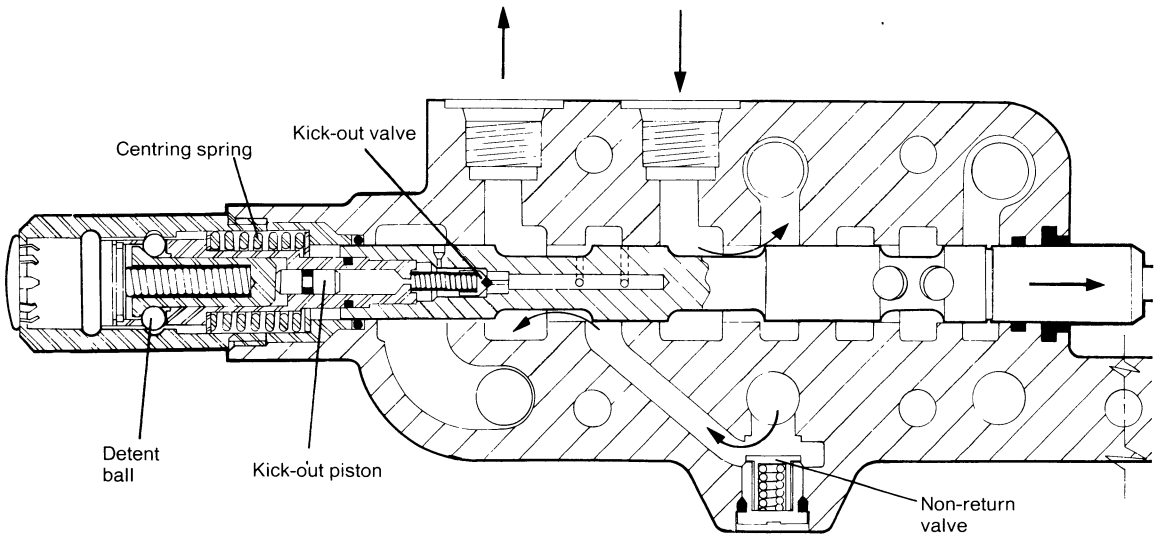

SPOOL IN DETENT (REARWARD) POSITION

FIGURE 31 DOUBLE-ACTING LIVE TAKE-OFF VALVE

FAULT FINDING

Given an adequate supply of **Clean** oil the Selectamatic hydraulic system will give long and trouble-free service. Unsatisfactory operation may however be experienced if the system is incorrectly adjusted or if the transmission oil is allowed to become contaminated with dirt, or water.

If the system appears to operate incorrectly, the fault should first be located and the cause established before any dismantling is undertaken.

Tools required for fault finding:-

Pressure gauge (0–4,000lb/sq in)	DB960984
Pressure gauge (0–250kg/sq cm)	DB960985
Adaptor plate	DB962234
Union, $\frac{1}{2}$ BSP	DB962235
Flexible pipe, $\frac{1}{2}$ BSP	K84522
Distance piece	DB916450
Sealing washer	K690913
Connector housing	DB962239
Setting gauge	DB961796

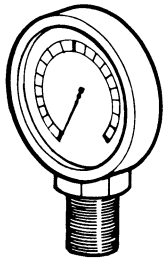

Pressure gauge — DB960984

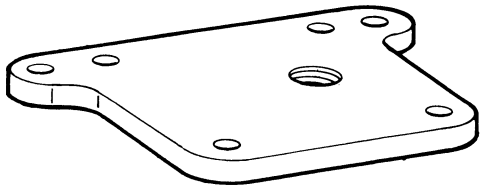

Adaptor plate — DB962234

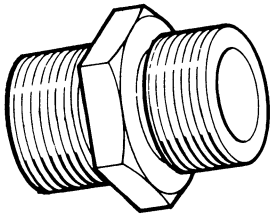

Union — DB962235

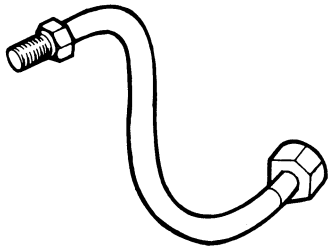

Flexible pipe — $\frac{1}{2}$ B.S.P.

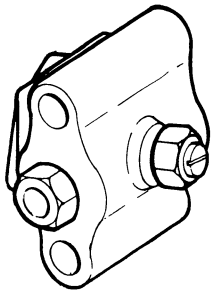

Connector housing — DB962239

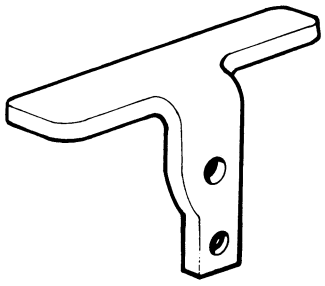

Setting gauge — DB961796

FIGURE 32 FAULT-FINDING TOOLS

FAULT FINDING SEQUENCE

Ensure that the transmission reservoir is filled to the correct level with oil which is of the correct viscosity and at operating temperature

To raise the temperature of cold oil select TCU/EXT and run engine at 1600/1800 rev/min at full TCU for 15 minutes. **Do not attempt to raise the oil temperature by holding the control lever in the Select position:** this will aerate the oil and possibly damage the pump.

Whilst waiting for oil to reach its working temperature, clean tractor of all external dust, particularly in areas of hydraulic controls and cover plates.

First Stage (checking tractor settings)

Before carrying out any detailed fault finding first check the following adjustments

A. Ramshaft cam — affects hold when height or depth is selected.

Remove cover plate from right-hand ramshaft bracket and lift linkage by hand. Hold the linkage in the fully raised position — on 12 Series tractors engage the locking latch and on 14 Series tractors place a suitable support under the right-hand lower link

With linkage at full height check that roller at end of height control push rod is seated in the cam plate indentation. If not, release the two nuts then turn the cam plate in the required direction and re-tighten the nuts.

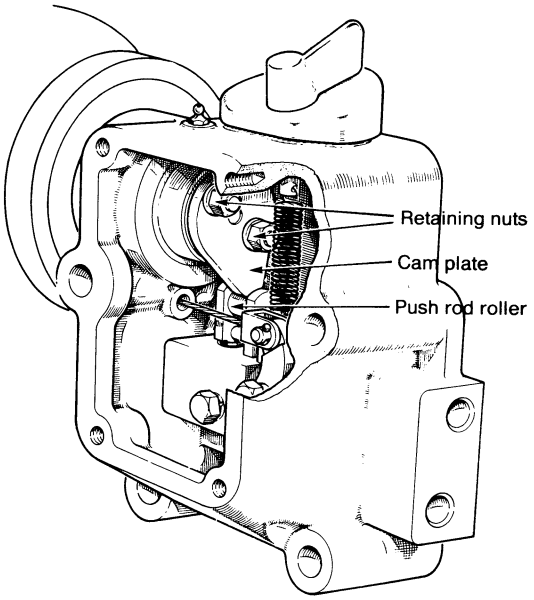

FIGURE 33 SETTING THE RAMSHAFT CAM

B. Control rod — affects TCU pressure and lift, particulary when selector is in TCU/EXT position.

Remove cover plate, complete with rate-of-lowering control, from front of the quadrant housing and the small cover plate from right-hand side of rear axle case.

Turn dial pointer into 'Height' position and lower the linkage. Hold control lever fully rearwards against quadrant spring ('Select' positions).

Set position of Nyloc nut on control rod — this is accessible through front of housing — so that it is possible to turn the dial pointer from Height to TCU/EXT and back without lifting the spool valve. This can be observed through axle case aperture and should be done with a dial gauge, if available.

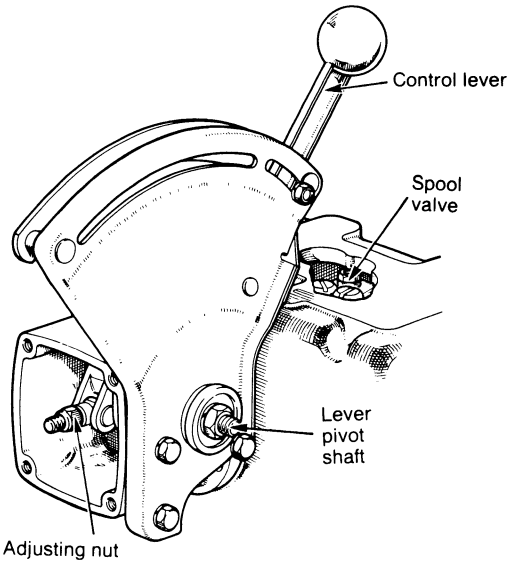

FIGURE 34 CONTROL ROD SETTING

C Quadrant spring and friction pad adjustment — affects cancelling of pump in lift and hold positions.

Check the control lever movement: it should be free to move but not so slack that it can be moved by vibration. If necessary adjust the pivot tension by tightening, or releasing, the locknuts on the lever pivot shaft.

Turn dial pointer into 'Height' control position then start engine. Hold control lever fully rearwards, against quadrant spring, and allow linkage to rise

When linkage reaches full height and relief valve starts 'screaming' move control lever slowly forwards until pump is unloaded and relief valve ceases to operate.

Pump should be unloaded when control lever is touching quadrant spring but should come under load when lever is moved rearwards against the spring.

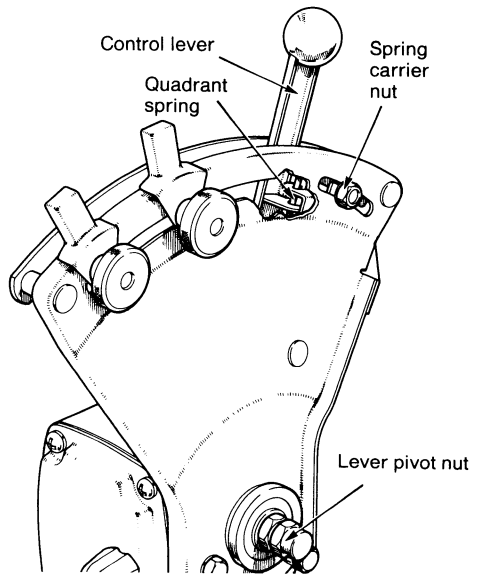

FIGURE 35 SPRING CARRIER SETTING

D. Sensing unit cable — affects hold and range of depth control on quadrant when depth selected

Turn dial pointer into 'Depth' control position and attach test weight to lower links. If a suitable test weight is not available attach a heavy implement to lower links but use a chain to attach headstock to ramshaft instead of the top link; it is essential that the top link is disconnected so that no compression or tension load is applied to the sensing unit.

Start engine and move control lever rearwards until it touches the quadrant spring. Allow linkage to rise to full height then stop engine.

Whilst keeping clear of implement, slowly unscrew the adjuster on sensing unit cable until the linkage commences to creep down then screw the adjuster **inwards** $5\frac{1}{4}$ turns and hold adjuster stationary whilst tightening the locknut.

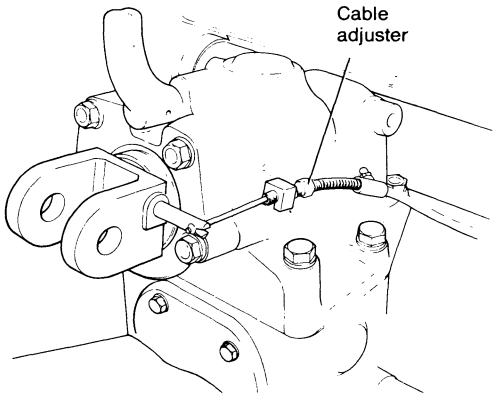

FIGURE 36 SENSING UNIT CABLE SETTING

Second Stage (checking operation)

A. Lift Test

Start engine and move control lever fully rearwards against quadrant spring.
If a considerable time lag occurs before implement commences to lift this could be due to an obstruction in the by-pass valve plunger filter or, if cleaning the filter fails to correct it, the latching valve stuck in its open position.

If implement fails to lift or lifts very slowly

1. Ensure that dump valve is closed: pushed down and turned. On 14 Series tractors also ensure that oil cooler control valve is closed.

2. Check that three-way valve is set in the correct position: either L or L1

3. Check that any live take-off valves fitted are in the neutral (central) position

4. Check transmission oil level: extra oil may be required when using external rams.

5. Check pump pressure: fit adaptor plate on top of distribution block and connect pressure gauge then restart engine: a pressure reading of less than 140kg/sq cm (2000lb/sq in) could be caused by:-

   (a) choked inlet filter
   (b) suction leak on pump inlet pipe
   (c) worn hydraulic pump
   (d) faulty relief valve

6. If pressure reading is satisfactory, indicating no fault on pump side of control valve, remove adaptor plate and connect pressure gauge to three-way valve, or, if no valve is fitted, use the special connector.

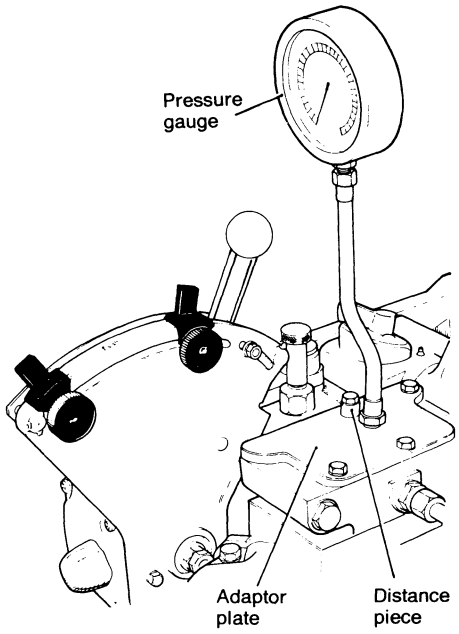

FIGURE 37 CHECKING PUMP PRESSURE

Restart engine and hold control lever against quadrant spring and note pressure reading. A low reading here could be caused by:-

(a) blocked, or seized, by-pass plunger. Remove plunger and clean filter with an air blast. Ensure that plunger moves quite freely and check that hold plunger is also free. Before replacing plungers run engine at idling speed for a few minutes, to flush valve bores with oil.

(b) if gauge shows no reading but relief valve is 'screaming', showing that pump is under load, this indicates an obstruction in control valve; probably a loose non-return valve seat.

(c) leaking 'O' rings at front of control valve or failed control valve pipe. Remove quadrant housing from front of axle case to examine pipe and 'O' rings.

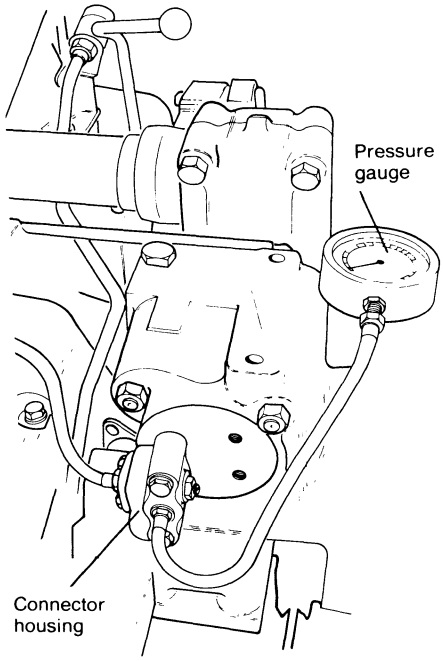

FIGURE 38 CHECKING PRESSURE AT RAM CYLINDER

B. Hold Test

1. Turn selector dial pointer into TCU/EXT then start engine and move control lever rearwards against quadrant spring. Allow implement to rise then release control lever and allow quadrant spring to move control lever into its 'hold' position.

2. Implement should remain stationary and if it gradually falls this indicates that oil is leaking from the system.

   (a) Isolate ram cylinder by moving three-way valve lever to position I, whilst implement is raised. If implement then remains stationary the leakage is from control valve or pipe, but if there is no difference the leakage is from ram cylinder or take-off valve.

   (b) Remove axle cover plate and check control valve for leakage.

   (c) Examine sealing washers on plugs, or dump valve for leakage.

   (d) Check hold plunger for leakage by using a mirror to observe any oil leaking out of lowering valve slot. Any leakage out of this slot when lever is in 'hold' position indicates a leaking hold valve or a leaking 'O' ring under hold valve seat.

   (e) Remove by-pass valve plunger and check level of oil in plunger bore. Oil flowing into bottom of port and raising oil level indicates a leaking non-return valve

   (f) Oil leakage from hold relief valve plug indicates a faulty hold relief valve.

   (g) Leakage from rear face of valve chest — drips can be seen when ramshaft bracket cover is removed — indicates a leaking spool valve. Turn spool through 90° and the rate of leakage will vary.

   (h) Remove quadrant housing and check pressure pipe and pipe connector 'O' rings for leakage

C. Lowering Test

1. Select 'Depth' or 'Height' position, start engine and raise linkage then move control lever into 'Lower' position. If implement is lowered correctly move on to the TCU test.

2 If implement does not lower, or lowers very slowly.

   (a) Check that lift is disengaged — 12 Series only.

   (b) Screw rate of lowering valve fully outwards.

   (c) Ensure that transmission is filled with oil of the correct grade: oil must also be warm.

   (d) When operating with external rams the dimensions and positioning of the rams may result in only a small back pressure. For a reasonable rate of lowering a minimum of 7kg/sq cm (100lb/sq in) back pressure is required.

   (e) Incorrect TCU adjustment could cause a high back pressure — see TCU test.

   (f) A slow drop can be caused by the rate-of-lowering valve being seized in the closed position or by faulty assembly (plunger fitted wrong way round).

   (g) If implement only lowers at slow engine speeds this could be caused by latching valve being seized in the closed position. The by-pass valve will then always be held on its seat and the implement will therefore rise in both lift and hold positions of control lever The implement will only lower when the pump output is so low that it can escape past the rate-of-lowering valve To check for a sticking latching valve, select TCU/EXT and place control lever in 'lower' position. If linkage then rises when control lever is moved from 'lower' to 'hold' this indicates a sticking latching valve.

D. TCU Test

1 Connect pressure gauge into three-way valve, or ram cylinder connector.

2. Select TCU/EXT then start engine. As control lever is moved slowly forward into TCU range the pressure should rise to 49–52kg/cm² (700–750lb/in²).

3. An incorrect pressure reading could be caused by:—

   (a) incorrectly adjusted TCU plunger.
   (b) incorrectly set adjusting screw in rocker lever.
   (c) incorrect, or broken TCU valve spring.
   (d) slow build-up of TCU pressure may be due to missing ball from hold valve plunger.

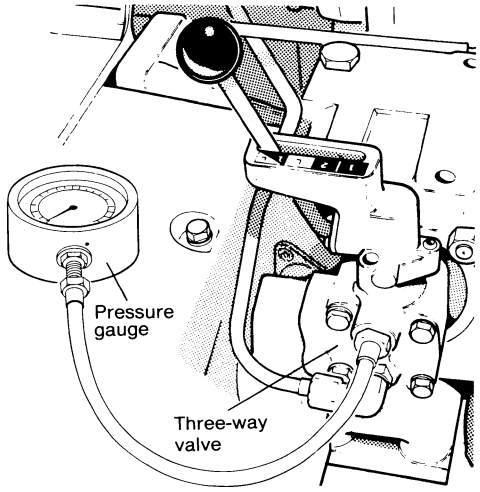

FIGURE 39 CHECKING TCU PRESSURE

E. Height Control Test

1. Select 'Height' control, start engine and move control lever slowly rearwards The implement should rise and follow the control lever. Movement up, or down, of the lever causing a corresponding movement in the linkage.

2. If implement moves erratically as position of control lever is varied, check for fouling, or seizure of the control rod, push rod and other linkage.

3. Heavy implements may drop slightly below the required position and then immediately return to the correct position. This is normal and is due to the slow response of the hold valve.

F. Depth Control Test

1. Place dial pointer in 'Depth' position, start engine and move control lever into 'raise' position.

2. Drive tractor, lower implement into work and check operating depth.

3. If implement does not operate satisfactorily first check that implement is set correctly and the linkage is attached to the headstock in such a manner to give sufficient compression, or tension, in the top link.

4. If tractor is fitted with an Adjustable, or Selective, sensing unit, check that the correct range is in use. It is essential that the force on the top link is sufficient to give the sensing unit shaft 1 6 to 3·2mm ($\frac{1}{16}$ to $\frac{1}{8}$in) movement when the implement is in work. The sensing unit cannot operate correctly if the force is so great that it holds the spring fully compressed or if it is insufficient to compress the spring at all.

5. If the implement depth fluctuates, check for a seized or damaged sensing unit, sticking or damaged cable or cable linkage: bell crank lever, push rod, etc.

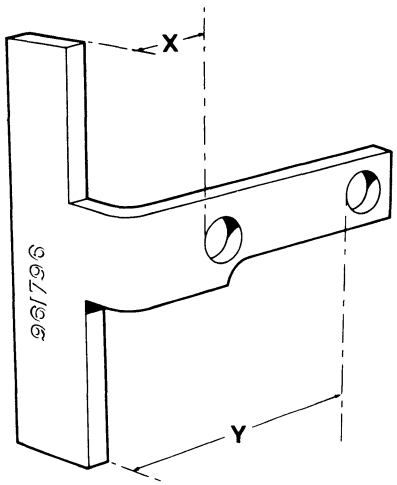

X = 0·437 in. (11·1mm)
Y = 1 580in. (40·1mm)

FIGURE 40 SETTING GAUGE
(Service Tool DB961796)

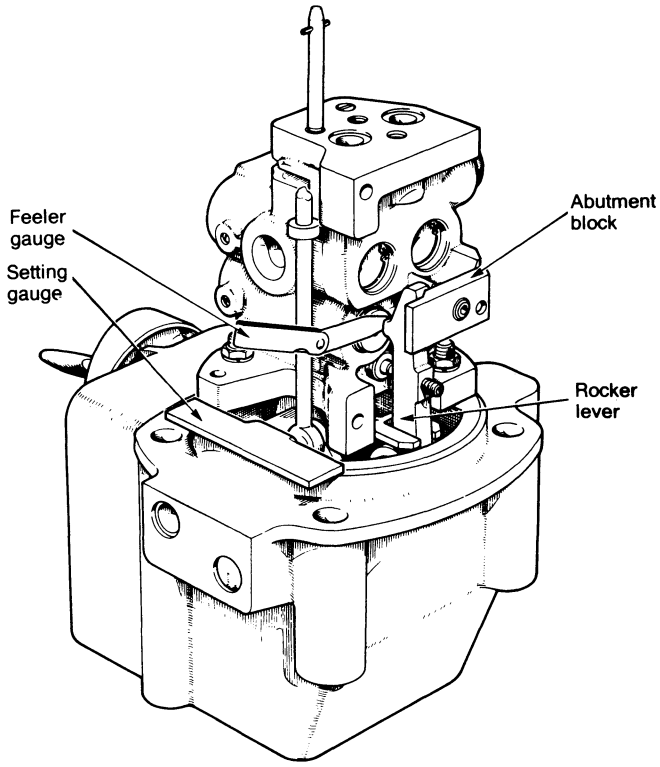

FIGURE 41 SETTING THE ABUTMENT PLATE

The settings and adjustments required on the Selectamatic system may be divided into two groups

The first group (Nos 1 and 2) are bench settings and are only required when a control valve is fitted to a ramshaft bracket

† The second group (Nos. 3 to 7) are tractor settings and must be carried out whenever any dismantling is done which disturbs the original settings. Note that tractor settings for Q cab tractors are listed separately (Page 31a).

ONE — Setting the abutment plate
After bolting valve assembly on to ramshaft bracket, place dial pointer in TCU/EXT position Engage inner hole of setting gauge on the rocker shaft pin and hold gauge against face of bracket spigot. With abutment plate firmly bolted in position and touching the underside of rocker lever, check clearance between the rocker lever and spool valve this should be 0·025 to 0·075mm (0 001 to 0 003in) If the clearance is incorrect remove abutment plate and add or remove shims as required Ensure abutment plate seats correctly when refitted and after firmly tightening retaining bolt, recheck the clearance.

TWO — Setting the TCU valve screw
With the dial pointer in the TCU/EXT position, engage outer hole of setting gauge on the rocker shaft pin and hold gauge against face of bracket spigot. After releasing the locknut tighten adjusting screw until it just touches the TCU valve, but does not compress the spring, then screw **in** a further **complete turn** and firmly tighten the locknut. As the point at which the ball valve just touches its seat is not easy to determine, this setting should be done with the valve inverted and a 0·05mm (0·002in) feeler gauge inserted between the plunger and screw. The adjusting screw can then be screwed inwards until it begins to hold the feeler gauge, then the gauge withdrawn and the adjusting screw screwed in further as required.

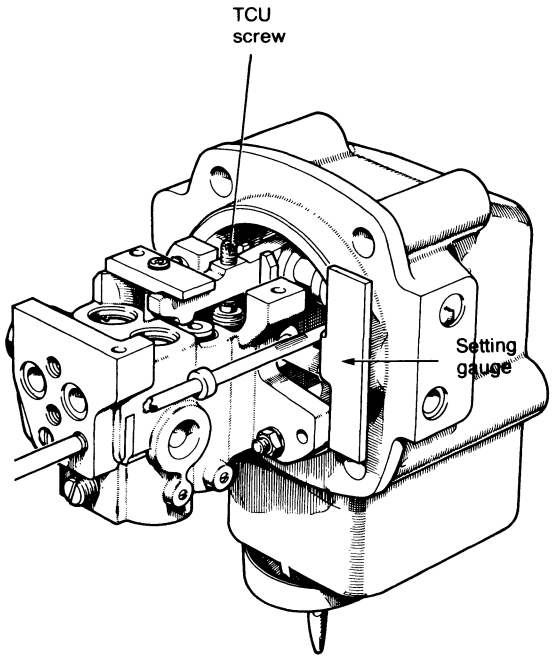

FIGURE 42 SETTING THE TCU VALVE SCREW

THREE — Setting the ramshaft cam
Remove cover plate from right-hand ramshaft bracket and lift linkage by hand. Hold the linkage in the fully raised position — on 12 Series tractors engage the locking latch and on 14 Series tractors place a suitable support under the right-hand lower link.

With linkage at full height check that roller at end of height control push rod is seated in the cam plate indentation. If not, release the two nuts then turn the cam plate in the required direction and re-tighten the nuts.

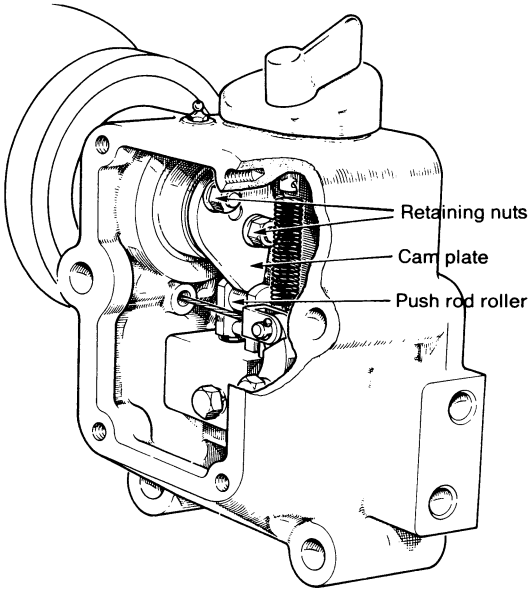

FIGURE 43 SETTING THE RAMSHAFT CAM

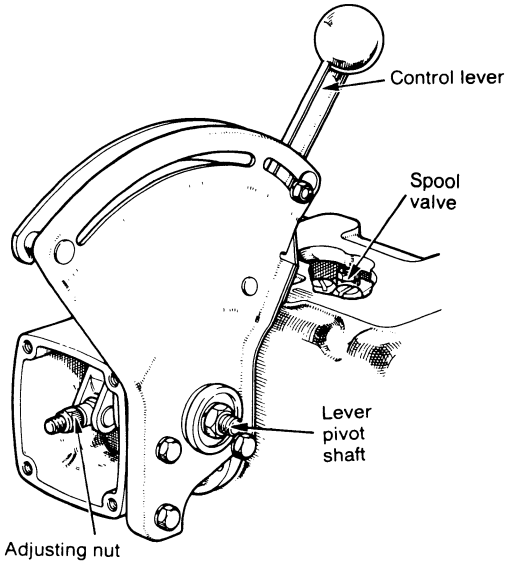

FIGURE 44 SETTING THE CONNECTING LINK NUT

FOUR — Setting the connecting link
Disengage lift latch, lower the linkage and remove cover plate from top of axle case. Remove cover from front of control lever housing and unscrew the Nyloc nut until it is level with the end of the connecting link. Release the spring carrier nut and slide carrier to the rear of quadrant slot. Place a small spanner between the control lever and rear finger guide, then move the finger guide rearwards until the control lever is pushed into the Select position and tighten the finger guide clamp nut to hold the control lever in this position. Rest a finger on top of the spool valve and with the control lever held in the Select position, flick selector knob from TCU/EXT. to Height and back to TCU/EXT. a few times. Flicking the selector knob in this manner will cause the spool valve to lift and when this movement can be felt — and it is useless to proceed until movement of the spool valve has been established — tighten nut further on to connecting rod. Recheck spool valve movement after each turn of nut, noting that the amount of valve movement will reduce as nut is tightened. Continue tightening nut until the point is reached where **spool valve movement just ceases.** As it is important to tighten the nut only to the point where valve movement ceases and not past this point, take extra care when reaching this position. Check valve movement more frequently and do not confuse a slight kick of the valve with actual movement. If in doubt, unscrew nut a little and try again.

Later tractors have a plug at the rear of the axle cover plate to enable spool valve movement to be checked with a dial gauge. If plug is removed and a dial gauge mounted so that its finger passes through the hole and rests on top of spool, valve movement will be shown when dial pointer is flicked from TCU/EXT. to Height and enable the nut to be tightened until movement just ceases. Do not confuse a slight kick of the needle with actual movement: if needle kicks but returns to its original position the valve is not actually moving.

When the nut has been set correctly, replace control lever housing cover, turning the lowering control knob so that spindle slot engages with the needle valve peg.

FIVE — Bleeding the system
Start engine and bleed the system by first removing the cover plate from the right-hand side of rear axle case, to gain access to the two plugs on the control valve; unscrew both plugs about two turns and place control lever in Select position until air-free oil is expelled. Move control lever forward, to make the pump inoperative, before firmly retightening the plugs; otherwise the pressure may prevent the washers from seating correctly and cause leakage later. Replace inspection cover on top of axle case and remove air from ram cylinder.

On 12 Series unscrew the bleed valve at front of ram cylinder until air-free oil is expelled.

On 14 Series pull Dump valve upwards then hold control lever in Select position for a short period, so that the ram cylinder is flushed with oil.

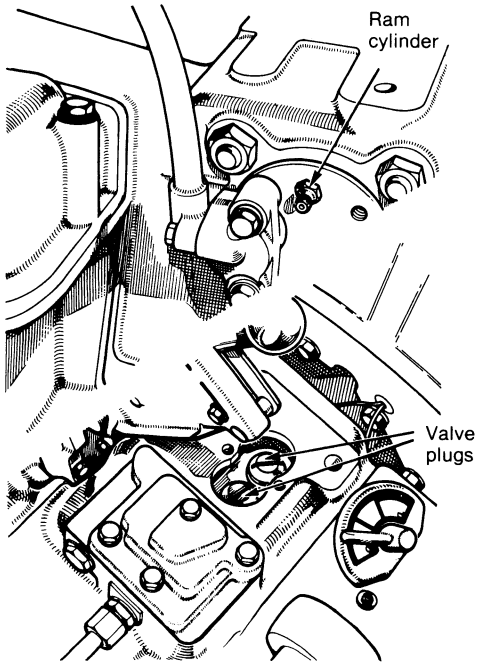

FIGURE 45 BLEEDING THE HYDRAULIC SYSTEM

SIX — Setting the quadrant spring
Check the movement of control lever; it should be free to move but not so slack that it can be moved by vibration. If necessary adjust the pivot tension by tightening, or releasing, the locknuts on the lever pivot shaft.

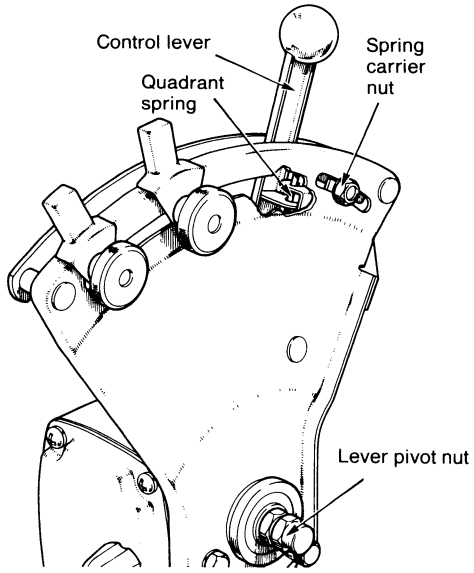

FIGURE 46 SETTING THE QUADRANT SPRING

Place the control lever in the Select position and turn selector knob into the Height position. Start the engine and allow linkage to rise. When the linkage reaches full height the pump relief valve will open and make a 'screaming' sound. When this occurs move control lever slowly forward until the 'screaming' stops, then release spring carrier nut and move spring carrier forward in its slot until it touches, but does not move the control lever, and tighten the nut. As overheating of the oil and premature wear of the pump will take place if pump relief valve is in continuous operation, ensure that the valve only operates when control lever is held against the spring and does not operate when the lever is released. If necessary make a slight adjustment to the spring carrier before finally tightening the clamp nut.

SEVEN — Setting the sensing unit cable
For this setting it is necessary to have weight on the lower links but the top link disconnected, so that no compression or tension load is applied to the sensing unit. This condition may be achieved in a number of ways; a bar across the link-ends so that a weight can be supported is ideal, but a plough can be used if it is first lifted normally, a support placed under the rear landside and then slowly lowered until the top link can be disconnected (placing the selector knob in Height control will enable this operation to be carried out quite easily).

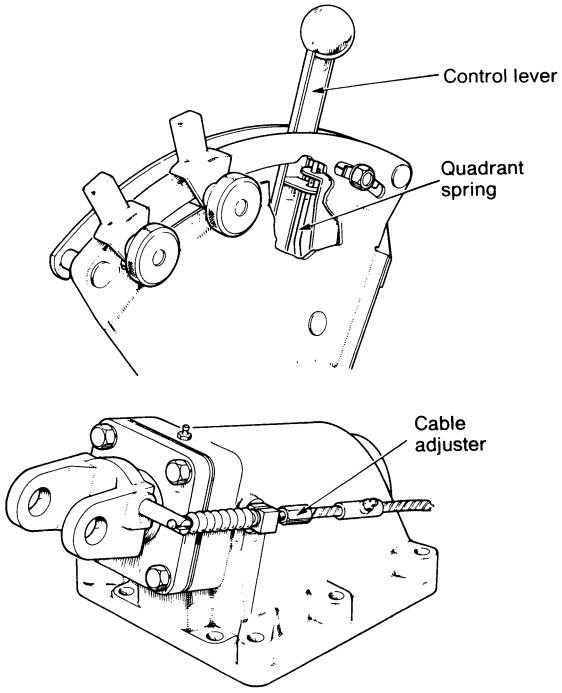

FIGURE 47 SETTING THE SENSING UNIT CABLE

With weight on the lower links and top link disconnected, place selector knob in Depth control position. After releasing the locknut, screw cable adjuster fully inwards to ensure that there is slackness in the cable. Move control lever rearwards until it touches the quadrant spring and start engine. Allow linkage to rise to full height and reach the Hold position then stop engine. With control lever touching quadrant spring, screw the adjuster outwards until linkage commences to creep down then screw adjuster **inwards** five-and-a-quarter turns and hold adjuster stationary whilst tightening the locknut.

Q cab adjustments: adjustments for Q cab tractor hydraulic controls are as for non-Q cab tractors unless detailed below.

Note: Before carrying out any adjustment, shorten hand lever control rod (Fig. 42) so that the hand lever **cannot** contact the quadrant adjustable select stop pin when the hand lever is moved into the select position. (This ensures that the friction lever select stop pin contacts its stop face when adjusting the connecting link.)

ONE – Setting the ramshaft cam.
As for non-Q cab tractors.

TWO – Setting the connecting link.
As for non-Q cab tractors but note that it is particularly important to ensure that the dial selector is moved fully between Height Control and External/TCU when checking for spool valve lift.

THREE – Bleeding the system.
As for non-Q cab tractors.

FOUR – Setting the select spring.
Select height control with engine at idle. Adjust locknuts on friction lever shaft to obtain maximum drag at hand lever whilst still permitting positive return of hand lever from the select position. Check action only with locknuts tight. Adjust select spring carrier plate to ensure that the pump relief valve stops unseating when the hand lever is slowly released from the select position, but without the 3 point linkage dropping from maximum raised position. Later tractors are fitted with two Belleville washers on the friction lever shaft. Earlier tractors may be modified to this specification where adjustment is difficult to obtain (see summary of design changes).

FIVE – Setting the hand lever control rod. With engine stopped and links lowered, select Height control. Adjust length of hand lever control rod so that friction lever extended arm (Fig. 42) abuts the lower stop peg when hand lever is 3 mm ($\frac{1}{8}$ in) clear of forward end of quadrant slots.

SIX – Setting the quadrant select stop pin.
With engine running at idle, select External/TCU. Adjust quadrant select stop pin to just contact the hand lever when friction lever select stop pin is firmly against its stop face (Fig. 42).
Note: If sufficient adjustment is available at quadrant select stop pin slot, lengthen the forward end of the quadrant slot (by filing quadrant) and re-adjust the hand lever control rod length.
Check to ensure that the linkage lowers fully in Height control and that full TCU pressure can be obtained. On early tractors it may be necessary to grind 3 mm ($\frac{1}{8}$ in) from the front face of the lower stop peg to provide increased drop in Height control.

SEVEN – Setting the sensing unit cable.
As for non-Q cab tractors.

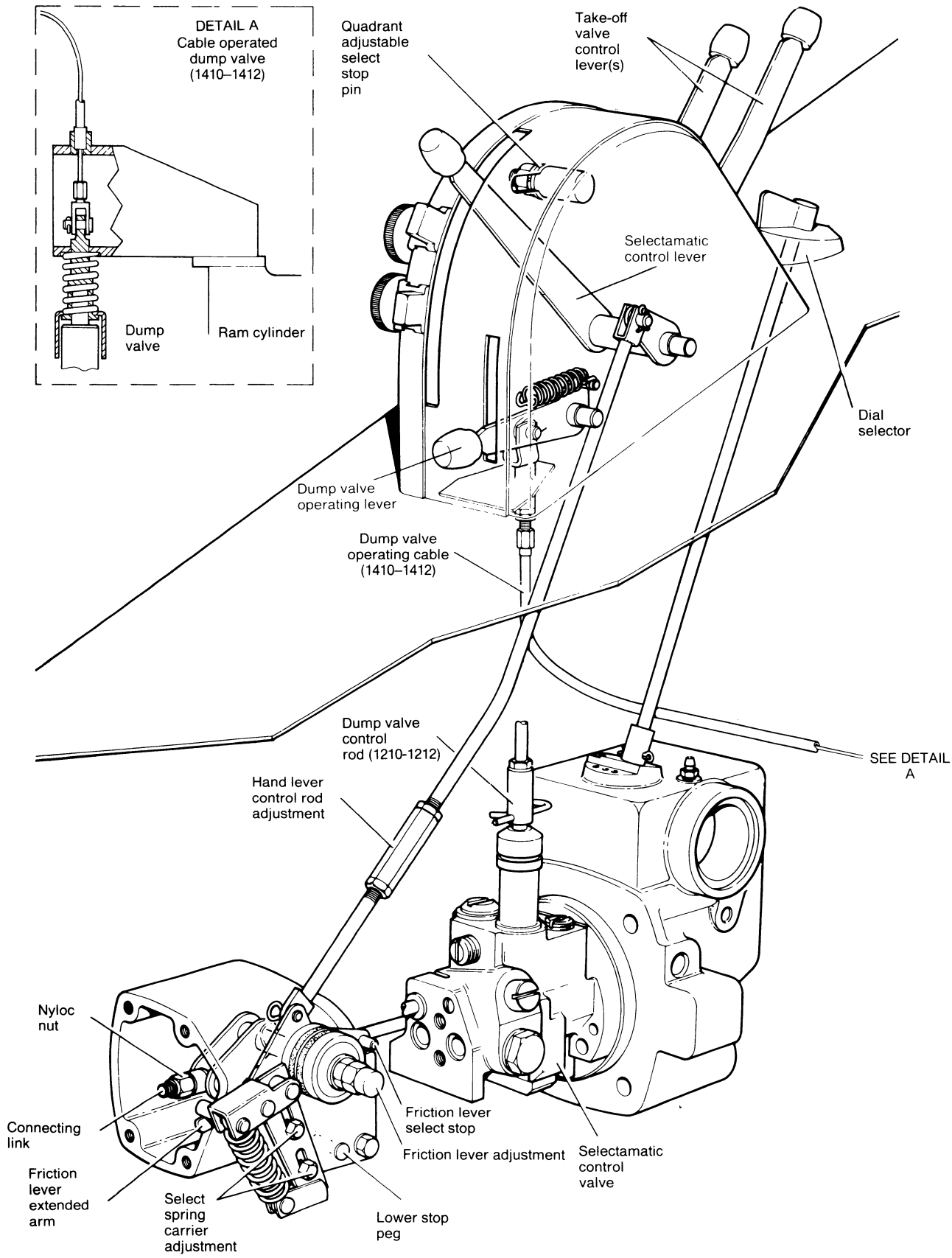

† FIGURE 42 Q CAB CONTROL ADJUSTMENT

† **IMPORTANT**

Before working on the hydraulic system you must clean all dirt from and around hydraulic components and controls If you do not do this, dirt will get into the hydraulic system This will result in failure of the system

† **External Filter:** The element in the pressure filter must be changed:

(a) after the first 50 hours
(b) 50 hours after work on inside of transmission or hydraulic system
(c) 500 hours after an element has been changed

To change the element, remove the filter bowl from filter head using a 1¼in AF spanner If a retaining clip is fitted over the filter element, remove it Pull out the element and destroy If there is an anti extrusion ring in the filter head, remove it Then take out the "O" ring Wash the bowl with fuel oil Do not use a cloth to clean the inside of the filter bowl

Fit a new "O" ring into filter head Make sure that the "O" ring is on its seat and is not twisted Apply a little grease to "O" ring Fit a new anti extrusion ring into the filter head Make sure the anti extrusion ring is on its seat and is not twisted Apply a little grease to the anti extrusion ring If an anti extrusion ring was not fitted, fit one now Put new element into filter bowl Make sure the element is fitted with its closed end to the bottom of the filter bowl If there is a retaining clip, fit it Fit filter bowl to filter head using a 1¼in AF spanner Check transmission oil level Add more oil if the level is low Start the engine and check for leakage around pressure filter Put the hydraulic control lever in the "lower" position for 30 seconds This will remove air from the system Stop engine and check transmission oil level Add more oil if the level is low

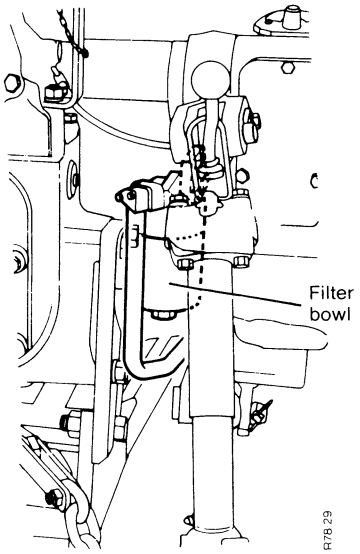

† FIGURE 48 EXTERNAL FILTER

† **Internal Filter:** The paper element in this filter must be changed

(i) after the first 50 hours
(ii) 50 hours after work on inside of transmission or hydraulic system
(iii) 500 hours after an element has been changed

If the yellow warning lamp illuminates 30 minutes after starting the engine

(i) at 1800 r/min, you must fit a new filter element
(ii) at engine idle r/min, take no action

To change the paper element it is first necessary to remove the transmission oil To do this take out drain plug (Figure 49) If you are changing the element between an oil change, put the oil in a clean container Keep the container covered so that dirt does not get into the oil.

An inlet filter is fitted on Hydra Shift tractors This filter must be removed before the housing cover is taken off

Remove the ten bolts which hold the housing cover in position The housing cover, paper element and valve and screen can now be removed Removed gasket and destroy Separate the valve and screen from the paper element, then destroy the paper element Wash the valve and screen in clean fuel oil Remove fuel oil with air Make sure that all the dirt is removed from the magnetic plug Clean the housing cover

Fit the valve and screen on a new paper element Check that the edges of the new element are not split An element with any damage must not be used Fit paper element and valve and screen in housing cover Make sure that the 'O' rings are in the correct position and are not twisted Clean the housing face and fit a new gasket Put housing cover in position and fasten with the ten bolts Fit drain plug and inlet filter (Hydra Shift tractors) Add transmission oil If you are using the oil in the clean container again: (a) pour the oil through a fine screen filter; (b) do not use the last gallon (4 5 litre) Check transmission oil level Add more oil if the level is low Start engine and check for leakage around housing cover Put the hydraulic control lever in the "lower" position for 30 seconds This will remove air from the system Stop engine and check transmission oil level Add more oil if the level is low

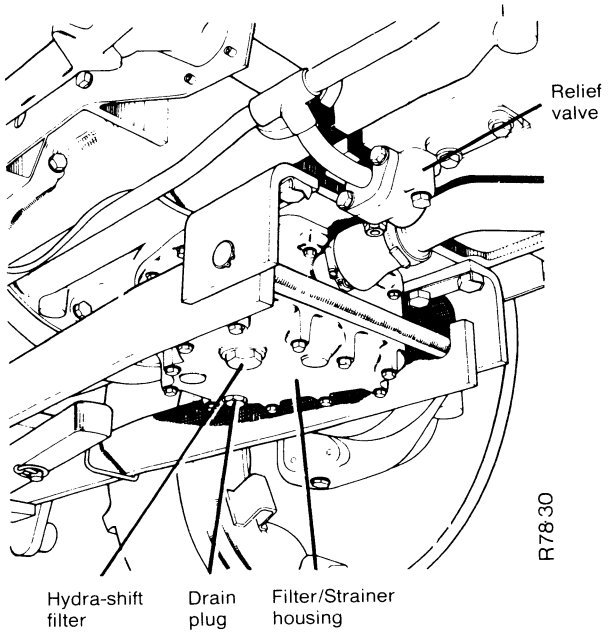

FIGURE 49
† INTERNAL FILTER/SUCTION STRAINER HOUSING

† **Suction Strainer:** A suction strainer is used when an external filter is fitted The suction strainer is in the same position as the internal filter (Figure 49) The suction strainer must be cleaned when the transmission oil is changed

To remove the suction strainer follow the instructions as for the internal filter Wash the suction strainer in clean fuel oil Remove fuel oil with air Clean housing cover and housing face. Fit suction strainer and 'O' ring to housing cover Make sure that the 'O' ring is in the correct position and is not twisted Fit a new gasket and fasten housing cover in position using the ten bolts Add oil, check for oil leakage and remove air from system (see instructions for internal filter)

† **Oil cooler:** To remove the oil cooler take off the louvre from the bonnet front Disconnect the battery leads and take out battery Disconect the oil pipes from oil cooler Remove the four bolts which fasten the oil cooler supports onto the mounting brackets for the oil pump Take the oil cooler out of the bonnet front

The control valve for the cooler is fitted between the oil pump and outlet pipe To take out the control valve, remove the four screws fastening the pipe flange to the pump body Dirt must not get into the system Cover the valve connections, oil pipes and oil pump connections

Install in reverse sequence Make sure that the 'O' rings on the cooler valve are in the correct position and are not twisted A flexible pipe can be fitted between the elbow and oil cooler (tandem pump)

Hydraulic Pump: Mounted in the front end of the main frame the hydraulic pump is accessible after removing the radiator grille and battery. On 12 Series tractors it is also necessary to remove the air cleaner.

Wipe pump and surrounding areas clean then disconnect pump inlet and outlet pipes: these are attached to pump body with bolts and sealed with 'O' rings

Remove bolts attaching pump mounting bracket to frame then withdraw bracket forward until pump is clear of driveshaft. On 1412 tractors the oil cooler will also be removed with pump bracket.

If coupling is to be removed from pump, and this has to be done to remove pump from bracket, remove nut from inside coupling then use an extractor to pull coupling from shaft. Do not use a hammer or levers on coupling as this may cause the sharp corners of the rotors to damage the faces of the softer bearings.

Refit pump in reverse order of removal If pump drive coupling has been removed first bolt pump to support bracket then replace key in pump shaft. Replace coupling, tabwasher and nut. Do not tap coupling on to shaft but hold coupling in vice and firmly tighten nut to pull coupling on to shaft taper, then lock with tabwasher.

Smear inside of coupling with thick grease before refitting pump in position Ensure that 'O' rings are in position on pipe couplings before replacing bolts and tightening evenly If a new, or repaired, pump is being fitted drain the transmission oil and fit a new paper element in hydraulic filter (see page 32).

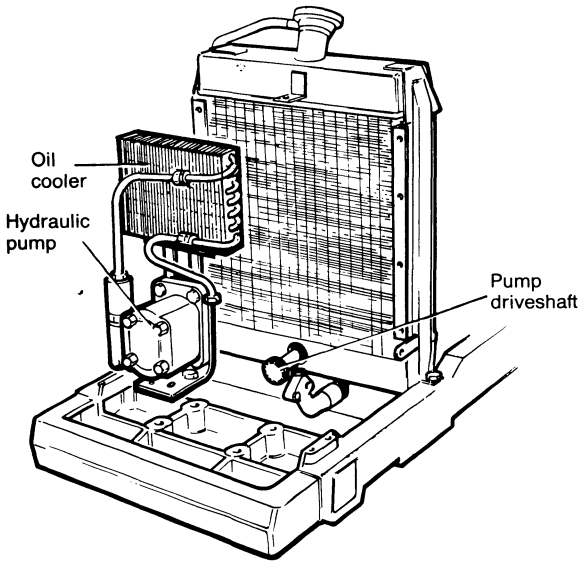

FIGURE 50
HYDRAULIC PUMP

Running in a Pump: When a new, or overhauled, pump is refitted it should not be immediately subjected to full output pressure but should be 'run in' for a minimum period of 10 minutes.

To 'run in' a pump, place dial pointer in TCU/EXT position and control lever in 'lower' position

Start engine and run at approx 1500 rev/min whilst very slowly moving the control lever forward so that after 8 or 9 minutes a position of full TCU is reached then follow this with a minute of 3 second periods in the SELECT position.

Do not hold the control lever in the SELECT position for long periods otherwise internal damage to the pump seals may occur

If the pressure is correct and the pump shows no signs of overheating during this period the pump is suitable for normal service.

Pump Relief Valve: Positioned on underside of main frame, the relief valve cannot be removed without draining the transmission oil. Wipe valve housing, drain plug and adjacent areas of main frame clean, then remove drain plug from filter housing cover. If oil is to be re-used, drain it into clean containers and keep it covered.

On four-wheel drive tractors the relief valve is located behind rear axle case, underneath the ramshaft, and can be removed without draining transmission oil.

Remove the two bolts attaching pressure pipe to relief valve, this will enable vent valve to be removed, then remove valve housing from main frame.

Before bolting valve housing to main frame, ensure that faces are clean and 'O' ring is positioned in housing recess.

Refill transmission with oil If original oil is being re-used, pour this through a funnel fitted with a fine screen filter and discard the last gallon, which will have accumulated any sediment.

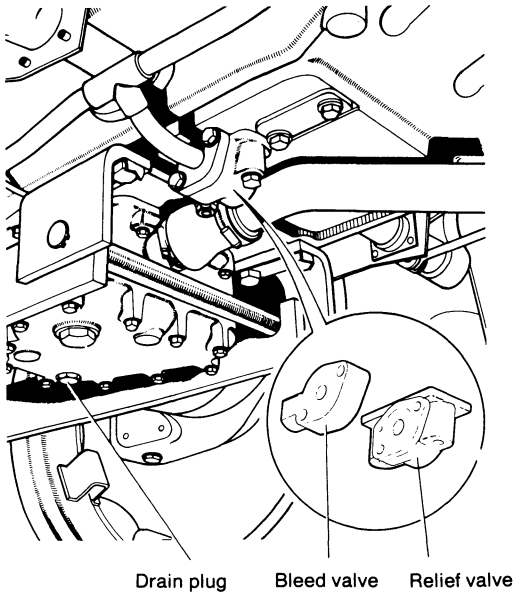

FIGURE 51
PUMP BLEED AND RELIEF VALVES

Pump Bleed Valve: Wipe pump relief valve, drain plug and adjacent areas then drain transmission oil. If oil is to be re-used drain it into clean containers. Remove bolts attaching pressure pipe to relief valve then hold pipe flange away from relief valve and withdraw bleed valve.

When refitting bleed valve ensure that it is fitted the correct way round: the small hole in valve body must be opposite the similar hole in relief valve body. Also fit gasket so that small hole is opposite holes in valve bodies: otherwise valve will not operate. An 'O' ring must also be fitted at each side of valve, in addition to a gasket on relief valve side.

Refill transmission with oil. If original oil is being re-used pour it through a funnel with a fine screen filter and discard the last gallon, which will have accumulated any sediment.

Dump Valve: First thoroughly clean area around the valve. On 12 Series tractors dump valve is fitted through right-hand side of the rear axle case. To remove valve simply unscrew it out of the control valve body, ensuring that no dirt falls inside axle case.

When refitting valve, smear sealing ring with grease so that it remains in position when valve is inverted, and 'O' ring is fitted on valve body groove. With hold plunger spring in centre of its bore, screw valve into place then firmly tighten.

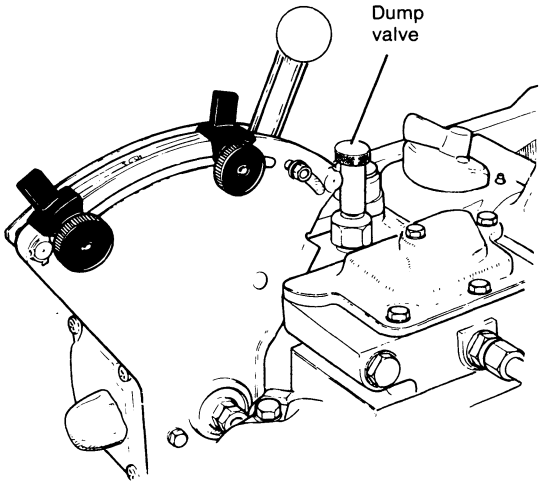

FIGURE 52
DUMP VALVE — 12 SERIES TRACTORS

On 14 Series tractors, dump valve is fitted at front end of ram cylinder. To remove valve, first pull valve upwards, to ensure linkage is fully lowered, then remove the two screws from valve body and pull valve out. Take care not to allow any dirt to enter ram cylinder.

When refitting valve, place 'O' ring in ram cylinder recess. Replace valve and push knob down, to centralise plunger in bore, before replacing and tightening the screws.

Three-Way Take-Off Valve: Bolted on the front end of the ram cylinder, the three-way valve can be removed after first lowering the linkage and any equipment, such as a loader, which is connected to the three-way valve.

Clean surrounding area before disconnecting take-off pipes from valve and feed pipe from distributor block. Remove the four bolts from valve body then lift valve from tractor.

When replacing valve, ensure that cylinder and valve faces are clean and 'O' ring is seated in ram cylinder face recess. Tighten the four bolts evenly, so that the valve body is not distorted, then reconnect pipes.



FIGURE 53
DUMP VALVE — 14 SERIES TRACTORS

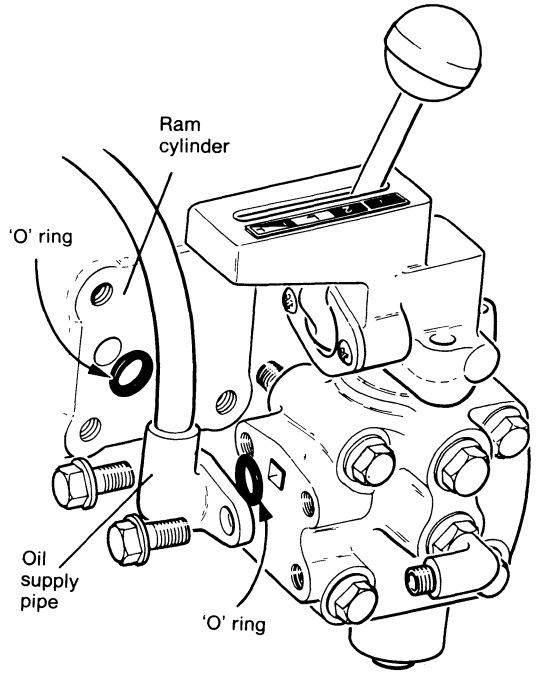

FIGURE 54 REMOVING THREE-WAY VALVE

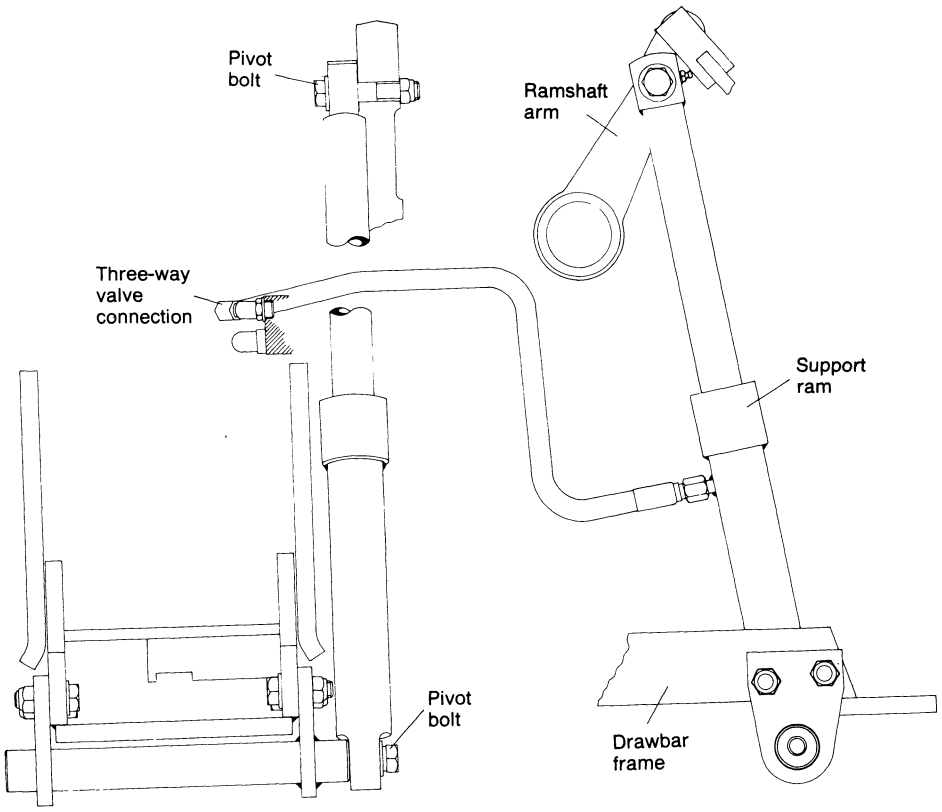

FIGURE 55 LINKAGE SUPPORT RAM — 12 SERIES TRACTORS

Linkage Support Ram: Mounted between ramshaft and right-hand side of drawbar frame, the ram can be removed by first lowering linkage, to ensure ram has minimum amount of oil in it, disconnecting oil pipe from ram then removing the upper and lower attachment bolts.

When refitting ram, smear both bushes with grease and ensure the two pivot bolts are fully tightened.

On 12 Series four-wheel drive tractors the support ram is fitted on the left-hand side.

On 14 Series tractors there is no provision for fitting a support ram.

Live Take-Off Valve: Bolted on top of right-hand side of rear axle case, the surrounding area should first be cleaned before valve is removed. Disconnect pipes and remove the five cover bolts then lift valves off axle case. Note the different lengths of bolts so that they can be refitted in their original position. If valves are being removed with distributor block, do not remove the two front bolts but remove distributor block with valve attached.

When replacing valves ensure that faces are clean and all 'O' rings are in position. Replace bolts and tighten evenly: the valve spools are a very close fit in their bores and only a slight distortion of body could cause spools to bind.

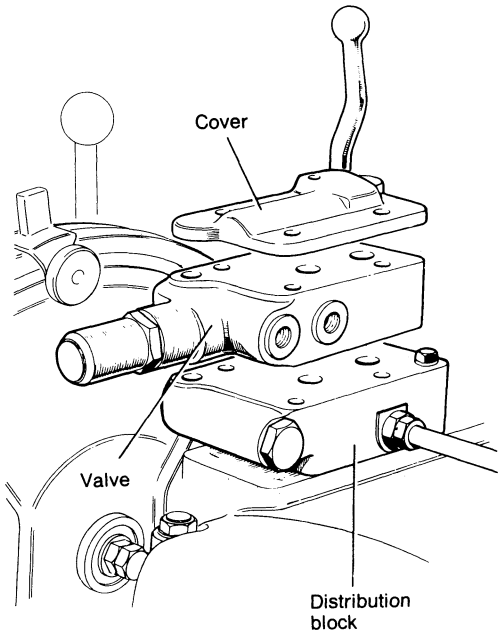

FIGURE 56
REMOVING LIVE TAKE-OFF VALVE

Sensing Unit: Bolted on top of the PTO case, where it provides the anchorage for the tractor end of the top link, the sensing unit should first be cleaned before removal.

Disconnect flexible cable, remove top link then remove bolts attaching unit to PTO case. Keep PTO case covered whilst unit is removed and when refitting unit refit the different length bolts in their original positions before firmly tightening. Reconnect and adjust flexible cable, see page 31.

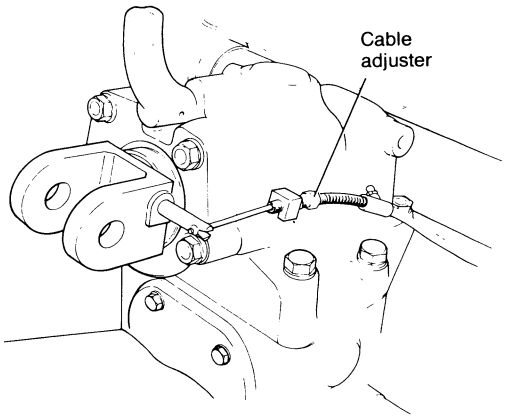

FIGURE 57
TOP LINK SENSING UNIT

Ramshaft: This is removed complete with right-hand ramshaft bracket and control valve· on 14 Series tractors the left-hand bracket is also removed with the shaft.

Remove cover from control lever housing. This is attached by four screws and must be removed complete with lowering control knob. Remove Nyloc nut from connecting link and remove the three bolts attaching housing to rear axle case: two of these are positioned inside the housing but the third is outside, and it will be necessary to release the three quadrant bolts to provide sufficient clearance to remove this bolt. Disconnect hand brake lever so that it can be removed with housing. Withdraw housing, noting that a distance piece and spring are fitted on connecting link

Removing control lever housing will expose the pressure pipe connection and enable the two attachment bolts to be removed, so that when control valve is withdrawn rearwards the pipe connection will remain in position.

Release locknut on lubrication pipe clamp bolt and unscrew bolt approx. eight turns. Wire pipe to upper housing bolt hole, so that it will not come out of its connection at inner end and fall into axle case.

Disconnect flexible cable from sensing unit, then remove sensing unit. Cover top of PTO case to prevent any dirt entering.

Disconnect levelling and lift levers from lower links and remove cover from right-hand ramshaft bracket.

Remove bolts attaching right-hand ramshaft bracket to axle case and left-hand cover to ram cylinder.

On 12 Series tractors the cover joint is vertical and two of the cover bolts pass right through the axle case. When the cover is removed a small quantity (1 litre — 2 pints) of oil will be released.

On 14 Series tractors the bracket joint is horizontal and both halves of bracket are removed with ramshaft. Remove three-way valve and clutch hand lever brackets, to gain access to the four bolts fitted through front of axle case then remove the large bolts attaching bracket cover to axle case. Do not remove the four smaller bolts attaching the two halves of the cover together; allow these to remain in position but loose. A small quantity (1 litre — 2 pints) of oil will be released when bracket is separated from axle

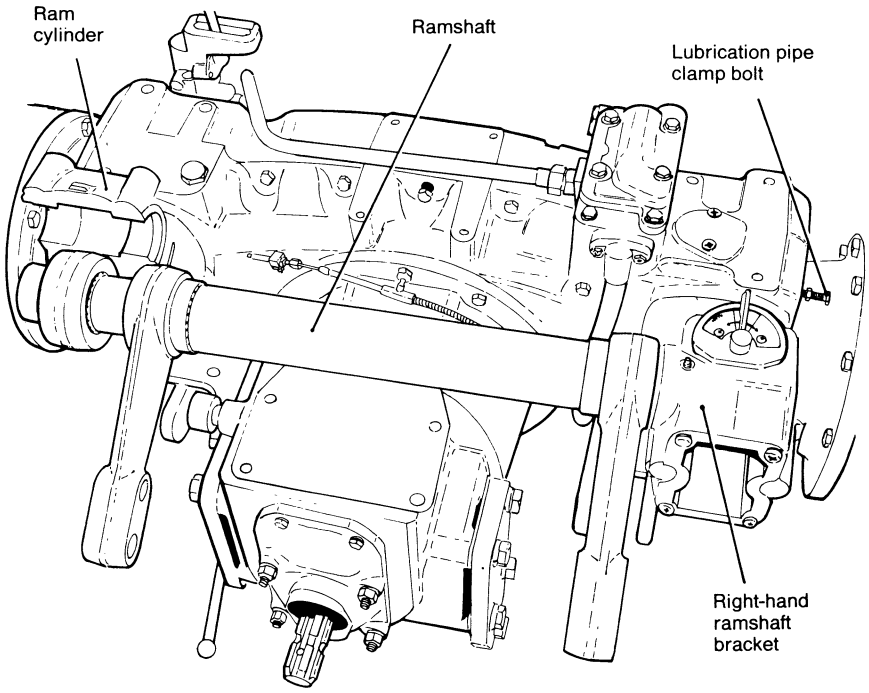

FIGURE 58 RAMSHAFT REMOVAL — 12 SERIES TRACTORS

Unscrew lowering control needle valve from front of control valve, to prevent it being damaged, then, whilst supporting the weight of the shaft with a portable crane, carefully withdraw the assembly rearwards until the control valve is clear of the axle case.

To separate ramshaft from its right-hand bracket, remove the two nuts attaching cam plate to ramshaft then slide bracket off shaft end

Before commencing to replace the ramshaft, ensure that the lubrication pipe is in position inside the axle case and has not become detached at its left-hand (inner) end. Clean the joint faces and fit a new gasket on right-hand bracket.

Fit the two small 'O' rings into their positions at front of control valve: a smear of grease will help to maintain rings in position whilst ramshaft is being refitted.

Carefully raise ramshaft into position, guiding control valve into axle and ensuring that control lever rod passes through axle case Place bearings in position on left-hand bracket then push shaft 'fully home'

When shaft is in position, replace and tighten bracket bolts. Smear core plug with jointing compound before replacing it in left-hand bracket. Remove retaining wire from lubrication pipe then position pipe and tighten clamp bolt Replace lowering control needle valve before bolting high pressure pipe connection to valve.

Refit control lever housing, using a new gasket Spring and distance must be fitted on control valve rod as housing is replaced and an easy way of doing this is to place spring on rod, then temporarily fit a bolt through control lever pin so that distance piece can be held in position whilst it is pushed against spring. When housing is bolted in position replace second distance piece and set position of Nyloc nut (see page 30).

Refit sensing unit, connect and adjust flexible cable, see page 31

On 14 Series tractors the ramshaft can be removed without removing the right-hand ramshaft bracket. If the ramshaft only requires removal, and is not therefore, being removed for access to control valve or selector mechanism, this can be done without disturbing the control valve or pipes.

Remove the left-hand rear wheel then remove the fender bolts so that the fender can be moved sideways clear of the left-hand ramshaft bracket.

Remove three-way take-off valve from front end of ram cylinder. Disconnect hand clutch lever, remove lever pivot bolt then remove the lever side plates. This will enable hand lever to be moved and provide sufficient clearance for removal of cylinder front-end cover.

When end cover has been removed, pull cylinder flange forward to withdraw cylinder sleeve clear of the left-hand ramshaft bracket.

Disconnect linkage from ramshaft and remove sensing unit. Remove cover from right-hand ramshaft bracket and remove the nuts and washers attaching cam plate to ramshaft.

After removing the top half of the left-hand ramshaft bracket, turn the ramshaft as far as possible into the raised position. When shaft has been turned far enough to allow connecting link to drop clear of axle case the ramshaft and left-hand bracket can be moved sideways. When shaft has been moved far enough to allow its left-hand end to be raised, remove the left-hand bracket then lift ramshaft clear.

Replace ramshaft in reverse order of removal, first ensuring that the cam plate is inside the right-hand bracket and both large and small 'O' rings are in position on left-hand bracket. Whilst entering shaft into right-hand bracket, raise left-hand bracket into position and locate cam plate on ramshaft studs.

Push ram cylinder sleeve rearwards to enter it in bracket recess then fit cover and replace the bracket bolts. Refit take-off valve, clutch hand lever and sensing unit. Replace fender, reconnect linkage and adjust position of ramshaft cam (see page 30).

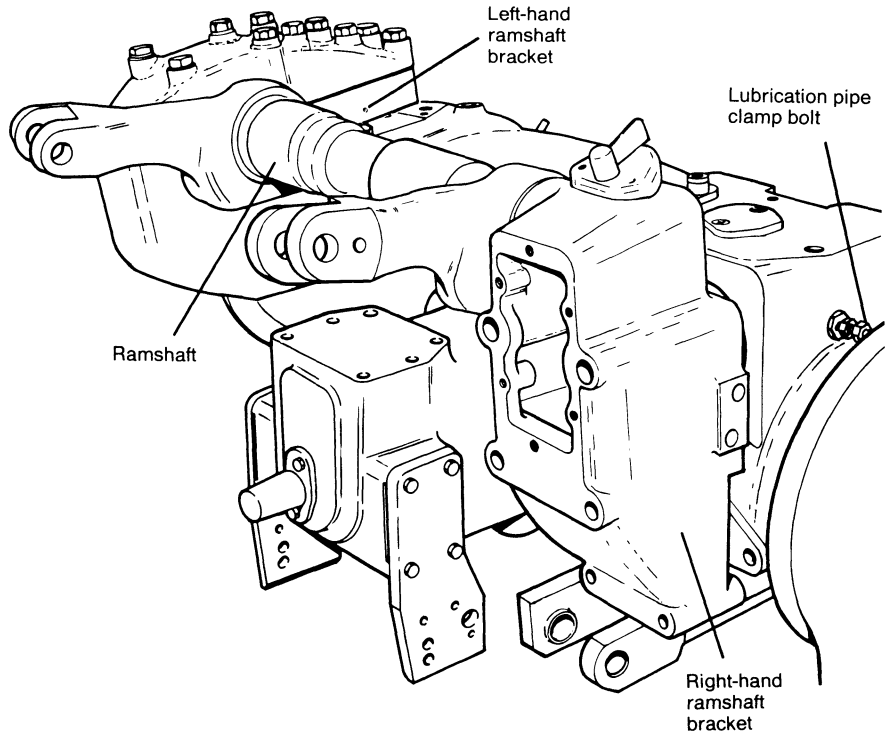

FIGURE 59 RAMSHAFT REMOVAL — 14 SERIES TRACTORS

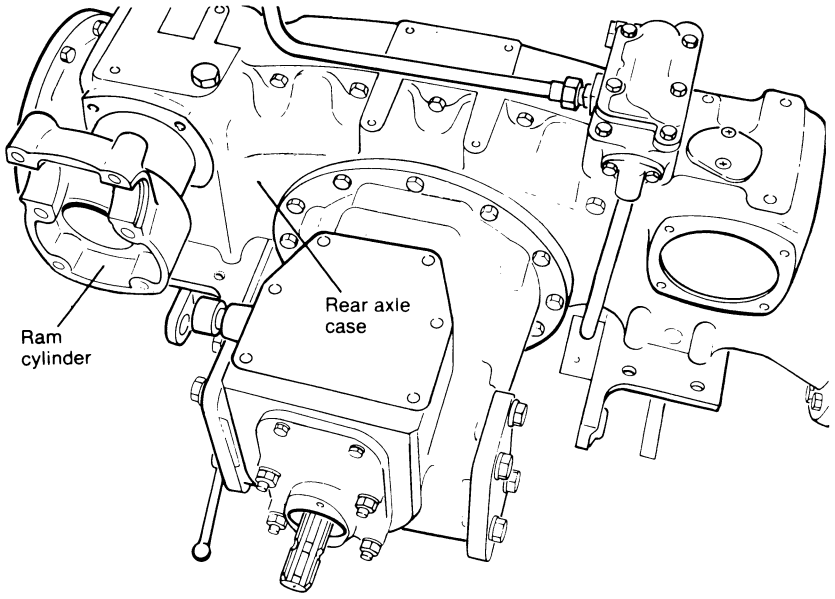

FIGURE 60
RAM CYLINDER REMOVAL — 12 SERIES TRACTORS

Ram Cylinder: Housed inside the left-hand side of the rear axle case the ram cylinder must be removed rearwards on 12 Series tractors but on 14 Series can be withdrawn forwards, without disturbing the ramshaft.

On 12 Series the ram cylinder body is a one-piece casting and after removing the ramshaft assembly it is only necessary to remove the three-way take-off valve, or connector, from the front end of the cylinder to enable the cylinder to be withdrawn rearwards out of the axle case

When refitting the ram cylinder, ensure that axle case is clean and the large 'O' ring is in position on front of cylinder Coat both sides of a new gasket with non-hardening jointing compound before fitting gasket on axle case. Smear cylinder 'O' ring with grease then slide cylinder into position and align bolt holes. Refit ramshaft before replacing take-off valve.

On 14 Series tractors the ram cylinder is a plain sleeve with separate ends and can be withdrawn from axle case when front end is removed

Remove the three-way take-off valve from front end of ram cylinder Disconnect clutch hand lever, remove lever pivot bolt then remove the lever side brackets from footplate This will enable hand lever to be moved and provide sufficient clearance for removal of cylinder front-end cover

When end cover has been removed, pull the cylinder flange forward to remove cylinder from axle case The flange is a loose fit on cylinder but is usually tight enough to bring the sleeve with it when pulled forward.

Refit cylinder, complete with piston and flange, into axle case Enter connecting link into cylinder and ensure that oil port through flange has an 'O' ring in it and is positioned opposite the hole in axle case Refit end cover, tightening the bolts evenly until they are fully tight Replace take-off valve and clutch hand lever

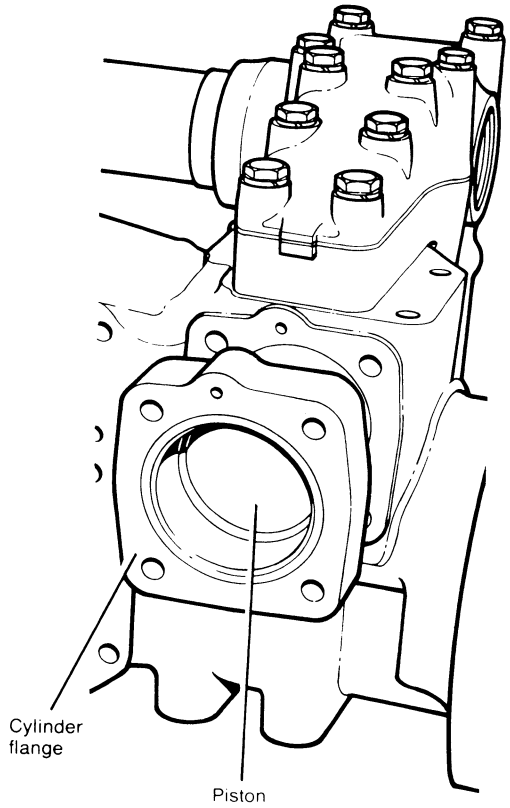

FIGURE 61
RAM CYLINDER REMOVAL —
14 SERIES TRACTORS

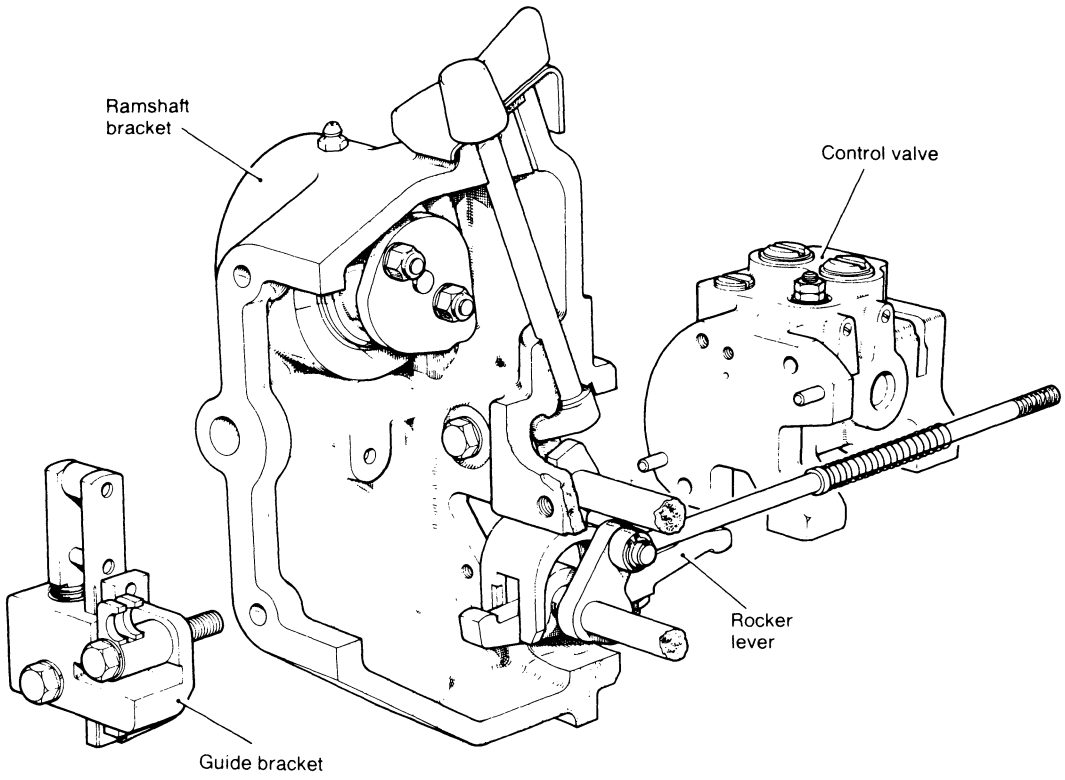

FIGURE 62 CONTROL VALVE AND RAMSHAFT BRACKET

Selectamatic Control Valve: As this valve is bolted to the front of the right-hand ramshaft bracket it is first necessary to remove the ramshaft and then remove the control valve from the ramshaft bracket

Having removed the right-hand ramshaft bracket, remove the guide bracket, this is attached by two bolts, one of which is also the pivot for the cable actuating lever Removing the guide bracket will expose a valve securing bolt and when this bolt and the two nuts are removed the valve assembly can be tapped off its dowels and separated from the ramshaft bracket

When refitting a valve assembly, guide the rocker lever into position over abutment block whilst fitting valve onto dowels then replace bolt and nuts, tightening them evenly and firmly

When valve is in position on bracket, check the settings of abutment block and TCU screw (see page 29)

Selector Dial Pointer Mechanism: Housed inside the right-hand ramshaft bracket this mechanism is accessible when bracket is removed

After removing ramshaft and control valve, see page 36, remove the two nuts attaching height control cam to ramshaft Then slide bracket off ramshaft Remove cam from inside bracket

When replacing ramshaft bracket, smear bush with grease and ensure 'O' ring is in position on ramshaft Replace bracket on ramshaft, lift arms towards rear of bracket, then refit cam Replace flat washers, spring washers and nuts but do not fully tighten nuts these can be tightened when assembly is completed and cam position has been set, see page 30

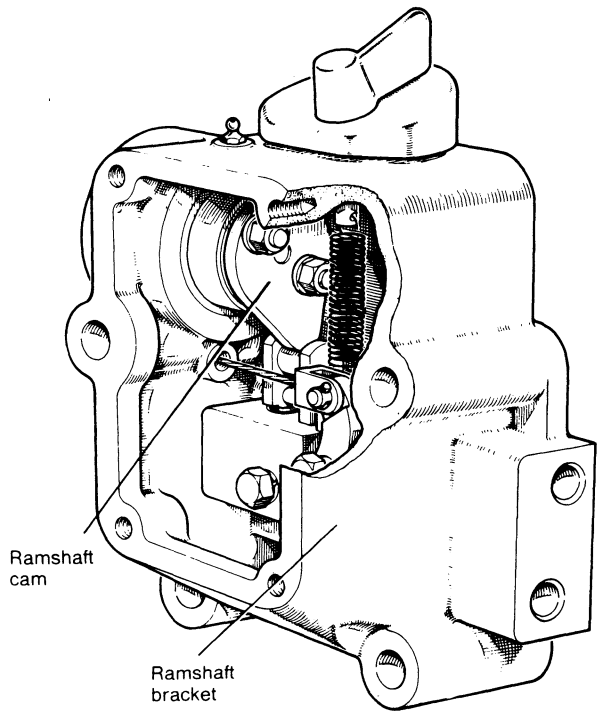

FIGURE 63
RIGHT-HAND RAMSHAFT BRACKET

† **Q Cab Tractors:** Instructions for removal and replacement of units on cab tractors are as for non Q cab tractors unless shown below.

† **Dump Valve:** On 12 series tractors the dump valve is operated by a lever inside the cab. The lever is fastened to a rod which is held on to the dump valve plunger with a spring clip. To remove the dump valve you must first remove the spring clip. Pull the operating lever for the dump valve up, to lift the control rod clear of the dump valve plunger. Complete the removal as for non Q cab Tractors (see page 34). Install in reverse sequence.

On 14 series tractors the dump valve is also operated by a lever inside the cab A cable is fastened to the lever at one end and to an extension on the dump valve at the other end. To remove the dump valve you must first pull out the split pin 'A' and clevis pin 'B'. This will release the cable from the extension. Remove the two bolts which hold the support bracket on to the ram cylinder Pull the support bracket up and clear of the extension. Remove the return spring and pull out the spring pin. The extension and cap can now be removed. Complete the removal as for non Q cab tractors (see page 34) Install in reverse sequence

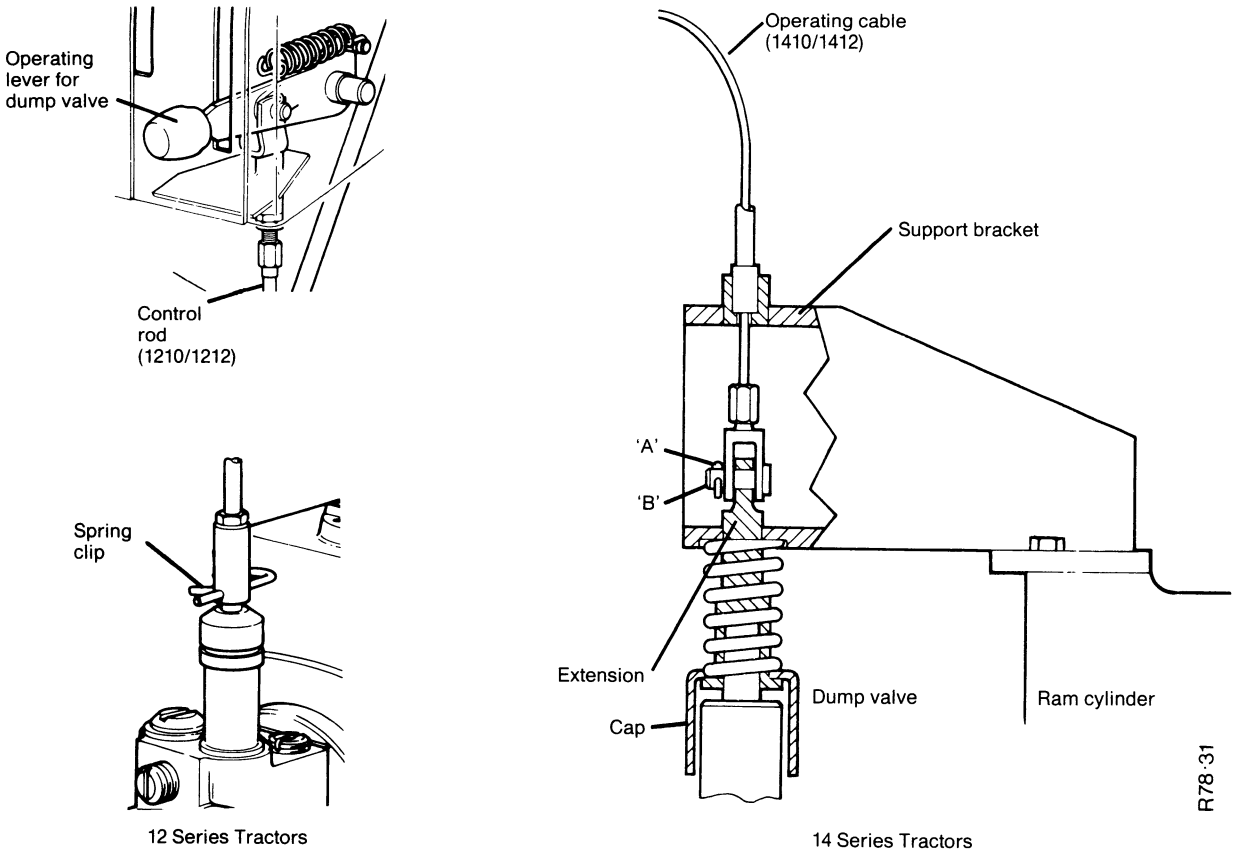

† FIGURE 63a DUMP VALVE FOR Q CAB TRACTORS

† **Three Way Valve:** Remove spring clip and clevis pin holding the connecting rod to the lever for the three way valve. Complete the removal as for non Q cab tractors (Page 34). Install in reverse sequence.

† **Lowering Control:** Remove spring clip holding the short control rod to the friction lever (Figure 31b). Complete the removal as for non Q cab tractors (Page 36). Install in reverse sequence.

† **Dial Selector:** Remove spring clip holding the control rod extension to the selector rod. Pull pointer up to bring the control rod extension free of the selector rod (Figure 31b). Complete the removal as for non Q cab tractors (Page 39). Install in reverse sequence.

† **Lift Latch:** Remove split pin and clevis pin holding the hand lever to the operating lever (12 Series only) Complete the removal as for non Q cab tractors (Page 36). Install in reverse sequence

† **Take Off Valve:** Remove spring clip and clevis pin holding the connecting rod to the operating lever Complete the removal as for non Q cab tractors (Page 35). Install in reverse sequence.

† **Levelling Lever:** Remove spring pin holding the telescopic extension to the shaft for the bevel pinion (Figure 27). Complete the removal as for non Q cab tractors. Install in reverse sequence.

Recommended Lubricants

The hydraulic system and transmission utilise a common oil reservoir and it is therefore essential to use a fluid (lubricant) suitable for both applications

The following lubricants are approved for use in the transmission/ hydraulic system but if none of these are available refer to the notes on alternative lubricants

The oil reservoir should be drained and refilled with new lubricant every 1000 hours

Alternative Hydraulic/Transmission Lubricants

It is emphasised that to safeguard the performance and reliability of the tractor, only the approved lubricants listed should be used

It is particularly important that EP or ATF oils are not used in the transmission/hydraulic reservoir If the recommended multi-grade oil is not available, a straight mineral gear oil of SAE 80 viscosity should be used do not use SAE 80 EP extreme pressure or mild EP SAE 80 oils sold for car gearboxes, or automatic transmission fluid

Extreme pressure transmission lubricants

These lubricants are intended for use in hypoid rear axles Extreme pressure additives are not normally formulated for use in hydraulic systems and may be subject to breakdown resulting in corrosion of non-ferrous parts and gum formation In addition these oils reduce sliding friction, excessive slip could therefore occur on the Hydra-Shift clutch plates and brake bands, resulting in excessive heat and wear

Automatic Transmission Fluids

These are light viscosity fluids formulated for use in torque convertors and automatic transmissions They are not able to withstand the loads occurring in tractor transmissions A number of oil companies are developing similar fluids for tractor use, which may be an advantage in arctic conditions and are necessary to prevent filter restriction on tractors fitted with a tandem hydraulic pump Before using any of these fluids it is essential to contact your David Brown Distributor — who will obtain further advice from Service Department, Meltham

Approved Lubricants

Tractors with Single Hydraulic Pump
(except in arctic conditions)

United Kingdom

BP Tractor Oil Universal

Agricastrol Multi-use or MP

Esso Tractor Universal or Unifarm

Mobil Mobiland Universal

Shell Tractor Oil Universal

Duckhams Farm Master

† Total HD2-M 20W/30

North America

Case TFD

Except U.K. and North America

Amoco HD-M Motor Oil 20W/30

BP Tractor Oil Universal
or BP Vanellus M20-50

Agricastrol Multi-use 20W/30

Esso Tractorlube Universal 20W/30
or Unifarm

† Mobiland Super

Shell Rotella SX Oil 20W/40

Tractors with Tandem Hydraulic Pump
also tractors with single pump
under arctic conditions

North America only

Case TFD

Worldwide except North America

Amoco 303 fluid

BP Tractran 9

Agricastrol MD

Esso Torque Fluid 56

† Mobilfluid 423

Shell 6332

In some countries the approved lubricants may be marketed under different designations from those listed above if any doubt exists, consult your David Brown Distributor

Recommended Lubricants

The hydraulic system and transmission utilise a common oil reservoir and it is therefore essential to use a fluid (lubricant) suitable for both applications.

The following lubricants are approved for use in the transmission/ hydraulic system but if none of these are available refer to the notes on alternative lubricants.

The oil reservoir should be drained and refilled with new lubricant every 1000 hours.

Alternative Hydraulic/Transmission Lubricants

It is emphasised that to safeguard the performance and reliability of the tractor, only the approved lubricants listed should be used.

It is particularly important that EP or ATF oils are not used in the transmission/hydraulic reservoir. If the recommended multi-grade oil is not available, a straight mineral gear oil of SAE 80 viscosity should be used: do not use SAE 80 EP extreme pressure or mild EP SAE 80 oils sold for car gearboxes, or automatic transmission fluid.

Extreme pressure transmission lubricants

These lubricants are intended for use in hypoid rear axles. Extreme pressure additives are not normally formulated for use in hydraulic systems and may be subject to breakdown resulting in corrosion of non-ferrous parts and gum formation. In addition these oils reduce sliding friction, excessive slip could therefore occur on the Hydra-Shift clutch plates and brake bands, resulting in excessive heat and wear.

Automatic Transmission Fluids

These are light viscosity fluids formulated for use in torque convertors and automatic transmissions. They are not able to withstand the loads occurring in tractor transmissions. A number of oil companies are developing similar fluids for tractor use, which may be an advantage in arctic conditions and are necessary to prevent filter restriction or tractors fitted with a tandem hydraulic pump. Before using any of these fluids it is essential to contact your David Brown Distributor — who will obtain further advice from Service Department, Meltham.

Approved Lubricants

Tractors with Single Hydraulic Pump (except in arctic conditions)	**Tractors with Tandem Hydraulic Pump** also tractors with single pump under arctic conditions
North America	**North America**
Case TFD	Case TFD

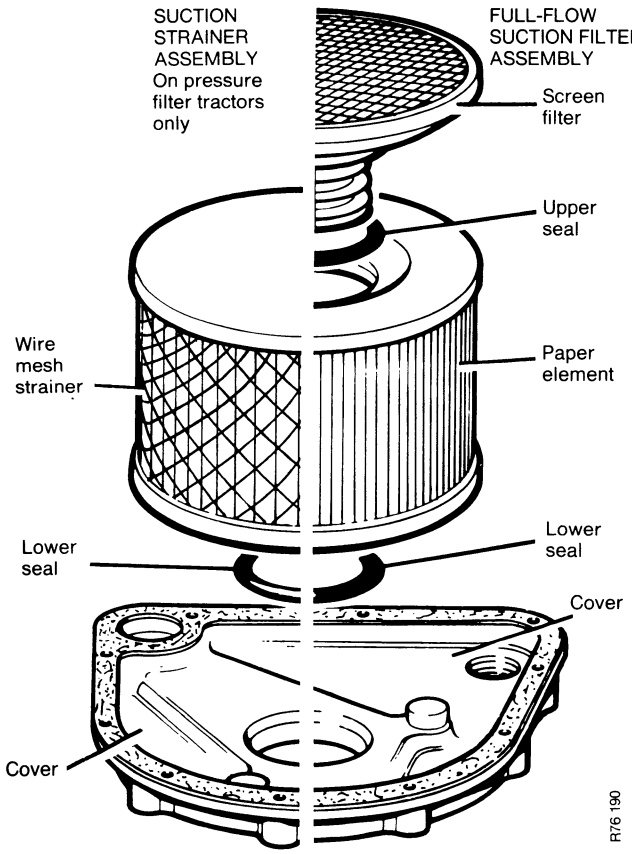

† FIGURE 64
COMPONENTS OF SUCTION STRAINER/FILTER ASSEMBLIES

† **Filters:** The only maintenance required is the fitting of new paper elements to the pressure or suction filters every 500 hours or if the warning light (where fitted) is illuminated at engine speeds above 1800 rev/min when oil is warm. Paper elements must not be cleaned and new elements must be handled very carefully. Elements are easily damaged when dry and a damaged element is useless. Except for cleaning the screen and magnetic filter, no attempt should be made to strip the screen filter The by-pass valve cannot be adjusted and if faulty operation is suspected a new unit should be fitted. On pressure line filter tractors, clean the strainer whenever transmission oil is changed.

Hydraulic Pump: The most important item of pump maintenance is keeping the transmission oil clean. If the transmission oil is allowed to be contaminated with dirt, or water, premature pump wear will take place

To dismantle a Plessey pump for examination:

1 Prepare a clean workbench where components can be laid out in order of removal.

2 Grip coupling in vice, unlock tabwasher and remove nut from shaft. Using a suitable extractor, remove coupling from shaft. Do not attempt to remove coupling with a hammer or lever as this may cause the sharp edges of rotor teeth to damage the faces of the softer bearings

3. Remove key from shaft and hold pump flange in a vice Remove the four bolts through body and flange then remove end cover and body from flange It may be necessary to lightly tap body with a piece of wood to remove it from the locating dowels. Do not attempt to separate body by inserting a screwdriver between the two faces. As soon as body is clear of dowels hold it to one side, so that the sharp corners of keyway do not cut seal lip as rotor shaft is withdrawn through seal

4 Withdraw gears and bearings from body, carefully noting their positions To facilitate correct reassembly mark bearings with a felt tipped pen Do not use a metal tool for marking

5 Remove circlip from mounting flange then, using a soft metal drift, carefully press out the oil seal

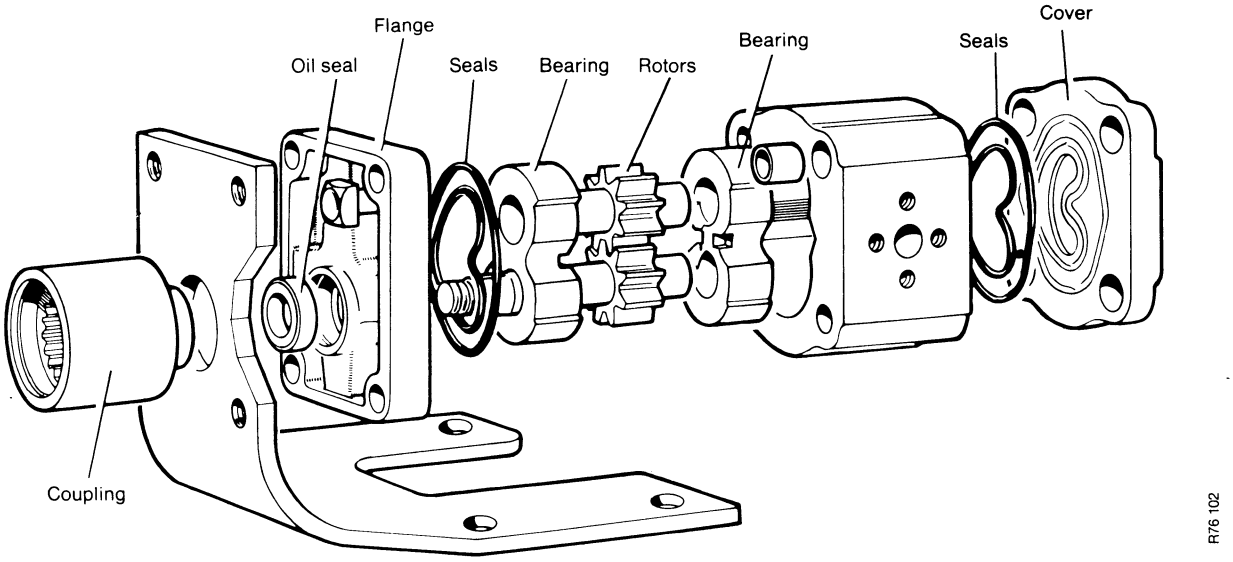

FIGURE 65 COMPONENTS OF PLESSEY PUMP

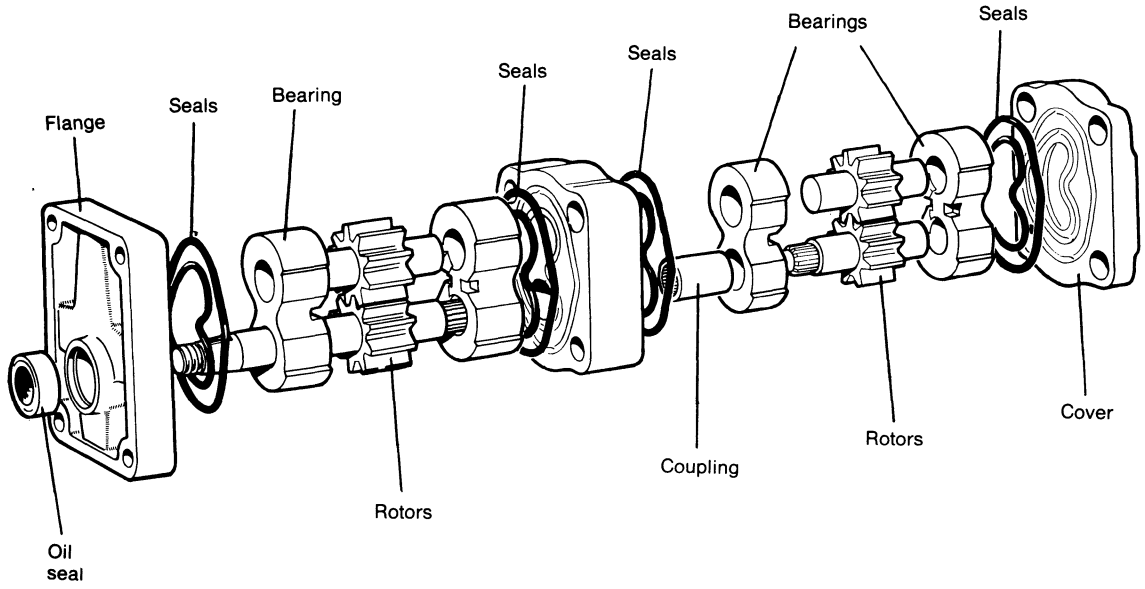

FIGURE 66 PLESSEY TANDEM PUMP

Inspection and Rectification: Pump body should be examined for wear or damage. It is normal for the gears to cut a light track on inlet side of the body bores. If bores are in good condition without excessive scoring the body is serviceable. The only rectification required is to remove any burrs from the edges of the rotor track, so that it cannot interfere with the balancing action of the bearings. Very carefully remove any burrs with a sharp scraper or fine emery cloth. If the rotors have worn a deep groove in the body bores, due to worn bearings allowing the rotors to be pushed towards inlet side of pump, the pump should be scrapped. Fitting new bearings in a worn body will hold rotors clear of the wear tracks and allow internal oil leakage to occur, resulting in loss of pump output.

Bearings are of aluminium tin alloy. Ensure that they are not damaged or embedded with particles of foreign matter during handling. Examine each bearing for wear on the face and in the bores. Pay particular attention to the condition of the lubricating scrolls and the portion of the bearing face between the bores known as the seal bridge. Score marks or damage across the seal bridge can cause high leakage losses. Ensure that outer diameter of bearing is smooth enough to allow it to move freely in the body. If necessary lightly polish the outer diameters of bearings to obtain free movement in body.

If bearing faces are not excessively worn they may be salvaged by polishing. Place a sheet of '0' grade emery cloth on a truly flat surface. Lubricate emery cloth with paraffin and polish bearing surface using a light rotary motion.

The bearings must not be worn sufficiently to prevent the sealing rings from being compressed when body bolts are tightened. Temporarily assemble rotors and bearings then measure distance between outer faces of bearings: this should be 0·1 to 0·2mm (0·004 to 0·008in) less than width of body, otherwise sealing rings will not be fully effective and pump output will be reduced.

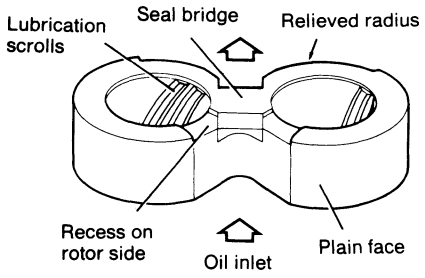

FIGURE 67 PUMP BEARING

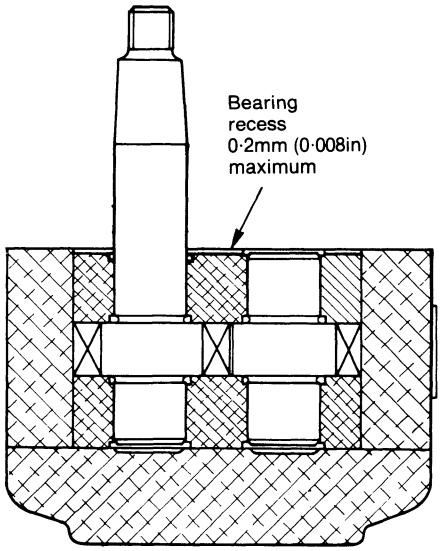

FIGURE 68 CHECKING BEARING WEAR

Rotors should be inspected for worn, or scored, side faces and journals damaged teeth or surface cracks Slight wear or scoring on journals can be erased by mounting rotor between lathe centres and polishing with 'O' grade emery cloth lubricated with paraffin Only polish the journal surfaces, do not reduce their diameters for satisfactory pump performance the journal diameters must be paired within 0 013mm (0 0005in) and gear widths paired within 0 005mm (0 0002in)

Re-assembling Pump: Carry out re-assembly on a clean workbench Wash all components in paraffin or fuel oil and thoroughly dry with an air blast Cleaning solvents likely to attack the synthetic rubber seals must not be used

6 Insert rotors into their bores with inlet port on body downwards, driving rotor should be on the right

7 Fit second bearing relieved radii on bearing towards inlet side and 'Y' shaped recess towards rotor faces

8 Whilst carefully holding cover to one side, so that the sharp corners of shaft keyway do not cut the oil seal, pass cover over rotor shaft and on to its locating dowels

9 Replace bolts through body Smear threads with thin oil then replace washers and nuts

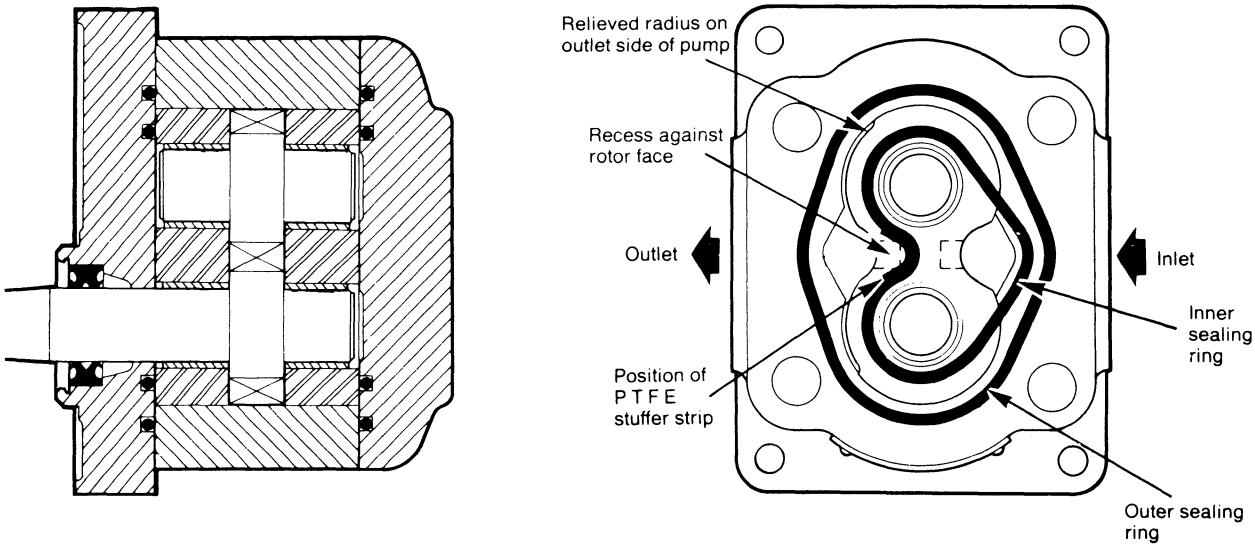

FIGURE 69 ASSEMBLY OF PUMP BEARINGS AND SEALS (PLESSEY)

1 Carefully press a new seal into flange then smear seal lips with grease

2 Fit new 'O' rings into grooves in mounting flange and end cover, locating the P T F E "stuffer strip" in its correct position A "stuffer strip should be fitted to all pumps including pumps not originally fitted with a strip

3 Fit cover, with 'O' rings in position on body dowels note that point of cover 'O rings must be towards inlet side of body

4 Place body on bench, cover downwards

5 Observe that bearings have a 'Y shaped recess on one bearing face and a relieved radii on one side Lubricate bearing bores and faces with **clean** oil then fit a bearing into cover relieved radii † towards outlet side of body and 'Y' shaped recess upwards (towards rotor face) If original bearings are being used these must be refitted in their original position

10 Tighten bolts evenly until fully tightened then seal inlet and outlet ports in pump body with masking tape

To dismantle a Dowty pump for examination:

1 Prepare a clean workbench where components can be laid out in order of removal

2 Grip coupling in vice, unlock tabwasher and remove nut from shaft Using a suitable extractor, remove coupling from shaft Do not attempt to remove coupling with a hammer, or lever, as this may cause the sharp edges of the rotor teeth to damage the faces of the softer bearings

3 Lightly mark end cover, body and mounting flange and take note of the direction of pump rotation

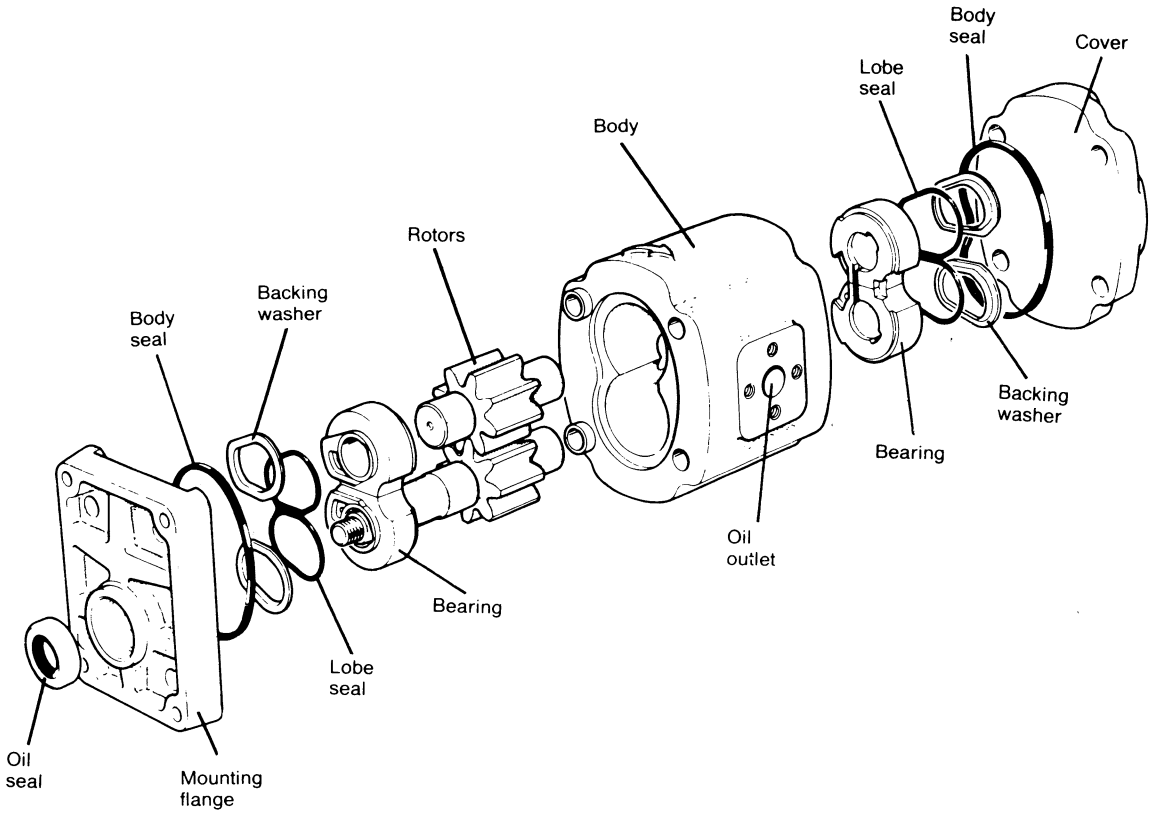

FIGURE 70 COMPONENTS OF DOWTY PUMP

4 After removing the nuts, tap out the four square-headed through bolts Remove end cover then carefully lift out the two backing washers, bush lobe seal and body seal

5 After making sure that there are no burrs on the shaft keyway, carefully tap mounting flange clear of the two ring dowels in pump body then slide it squarely off the shaft

6 Carefully lift out body seal, backing washers and lobe seal

7 Hold pump body vertical, with mounting-flange end downwards and a hand underneath it to prevent the bushes falling out Carefully tap on the body side with a soft-faced hammer, or wooden block, to dislodge the lower bushes then slide these carefully out of the body Keep bushes as a pair and place them on mounting flange

8 Invert body and lift out the two rotors Remove the remaining pair of bushes in the same manner as the previous pair

Inspection and Rectification: Pump body should be examined for wear or damage It is normal for the rotors to cut a light track on the inlet side of pump body but if wear of the bushes, or journals, has allowed the rotors to form a deep wear track the pump should be scrapped It is no use fitting new bushes into a body with deep wear track as the increased rotor tip clearance will allow increased internal oil leakage

If the wear track is not deep but the rotor tips have raised a burr at the sides of the track the burr should be carefully polished out, otherwise it may prevent the bushes being held against the rotor side faces and allow internal oil leakage

Erosion of the pump body may occur due to oil cavitation, caused by operating the pump with a restriction in the pump oil supply or an air leak on the inlet side of pump If this occurs the pump output and pressure will be affected

Examine the bush bores for signs of wear and the bush faces adjacent the rotor teeth for scoring or pitting Slight scoring of the bush faces is acceptable provided the pump operates satisfactory at full pressure

Assemble the bushes and rotors in the pump body with the end cover in position and measure how far the body protrudes over the bearing face. If the protrusion is more than 0·25mm (0·010in) the pump should be scrapped as the seals will be unable to ensure an effective seal.

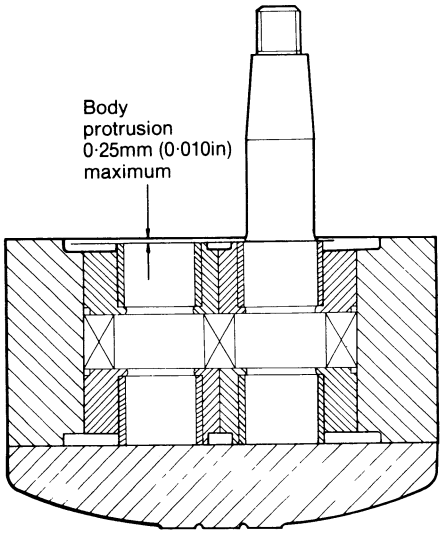

FIGURE 71 CHECKING BEARING WEAR

Examine the rotors for discoloration due to overheating and the journals for scoring. Ensure that contact marks on rotor teeth are evenly distributed across each tooth surface and none of the teeth are chipped.

Check that the cover and mounting flange are flat and free from scoring and the flange oil seal is in good condition.

Once the internal condition of the pump has been assessed it may be considered more feasible to renew the complete pump than fit several new parts.

Re-assembling Pump: Prepare a clean work bench, wash all components in cleaning solvent or fuel oil. Cleaning solvents likely to attack the synthetic rubber seals must not be used.

1. Prepare the mounting-flange-end bushes for insertion in body by placing them on the bench — lobes uppermost and their flats in contact. Smear the 'spectacle' lobe seal with a mineral-base grease then fit it round the bush lobes. Fit two backing washers inside the lobe seal 'eye pieces': when fitted correctly, the backing washers must be level and flush with the top surface of the bush lobes.

2. Prepare the bushes for the cover end of the body in the same manner.

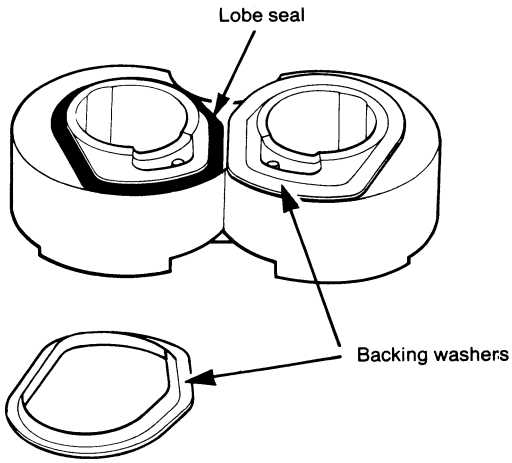

FIGURE 73 ASSEMBLING LOBE SEALS AND BACKING WASHERS

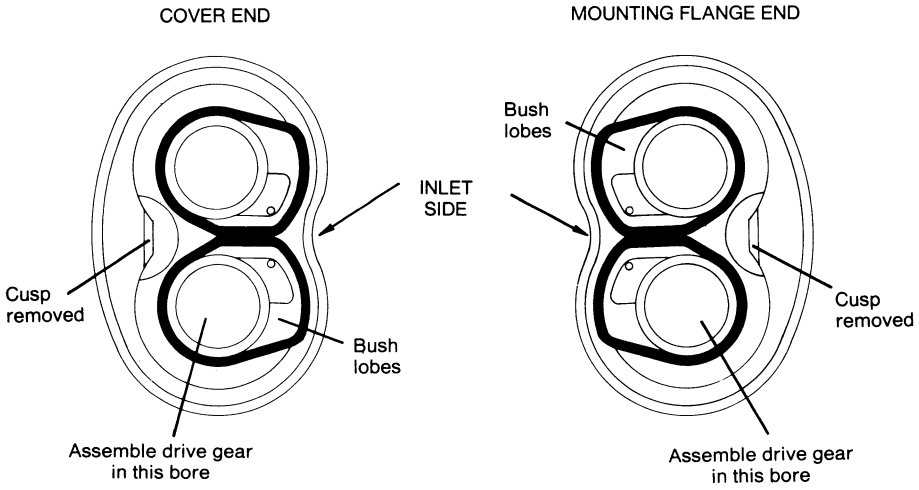

FIGURE 72 ASSEMBLY OF PUMP BEARINGS AND SEALS (DOWTY)

Note: The bushes are always assembled in the body with their lobes AWAY from the flat formed by the removal of the cusp at the intersection of the body bores.

3. Smear the body seal with mineral-base grease then place it in the body recess at the ring dowel end

4. Pack the space between the lips of the oil seal with a mineral-base, high-melting-point grease

5. Pick up the body and hold it with the ring dowels uppermost and with the fingers of one hand inside ready to support the bushes

6. Pick up the mounting-flange bushes complete with lobe seal and backing washers, and slide them into the body bores — lobes facing outwards and away from the flat formed by the removal of the cusp at the intersection of the body bores The bushes must be entered squarely in the bore and kept square to each other No force must be used; if the bushes do not slide easily into the bores, remove them and examine for bruising Light bruising can be stoned out with a fine-grit hand stone

7. Fit the mounting flange onto the two ring dowels, ensuring the dismantling marks are aligned and the flange fits flush against the body Clamp mounting flange, with body uppermost, in a vice fitted with soft jaw grips

8. Check that bushes are flush against the mounting flange face and the lobe seal and backing washers are not displaced Apply a smear of grease to the drive rotor shaft taper, to assist its passage through oil seal, then carefully slide rotor into position until shaft has passed through oil seal and rotor side face is resting on bush face Fit the driven rotor in position ensuring that if the original rotors are being refitted they are assembled in their original position

9. Pick up the cover-end bushes, complete with lobe seal and backing washers, and slide them over the rotor journals — lobes facing outwards and away from the removed cusp — entering them squarely and without force

10. Lubricate the body seal with a mineral-base grease before fitting it into its recess Place end cover in position, aligning the assembly marks before replacing the through bolts Locate the square heads of the through bolts in the mounting flange recess then tighten the nuts evenly to 5kg metres (35lb ft)

11. Pour a small quantity of **clean** oil into pump ports and check pump for freedom of rotation Bolt pump to mounting bracket, replace key in shaft then refit coupling **Do not hammer the coupling on to** shaft but hold coupling between vice jaws, firmly tighten retaining nut then lock with the tab washer

Running in a new pump: When an overhauled pump is refitted it should not be immediately subjected to full output pressure but should be 'run in' for a minimum period of 10 minutes

To 'run in' a pump, place dial pointer in TCU/EXT position and control lever in 'lower' position

Start engine and run at approx 1500 rev/min whilst very slowly moving the control lever forward so that after 8 or 9 minutes a position of full TCU is reached then follow this with a minute of 3 second periods in the SELECT position

Do not hold the control lever in the SELECT position for long periods otherwise internal damage to the pump seals may occur

If the pressure is correct and the pump shows no signs of overheating during this period the pump is suitable for normal service

Pressure Relief Valve: Separate the components, wash in paraffin and dry with an air blast Retain the shims as they must be refitted exactly as removed Examine the valve cap and ensure that it slides quite freely on the seat Also examine the plunger and seat contact faces they must be undamaged and not excessively 'hammered' If any component is unserviceable replace the whole with a pre-set assembly Separate parts are not supplied If no components are faulty, fit plunger into cap then smear inside of cap with clean oil Fit cap on to seat, ensuring that it is a free sliding fit then replace shims and spring Do not attempt to increase valve opening pressure by fitting additional shims unless a test rig is available and the valve opening pressure can be checked Clean inside of housing before fitting valve assembly into it If valve is not being refitted to tractor immediately, seal both ports with masking tape

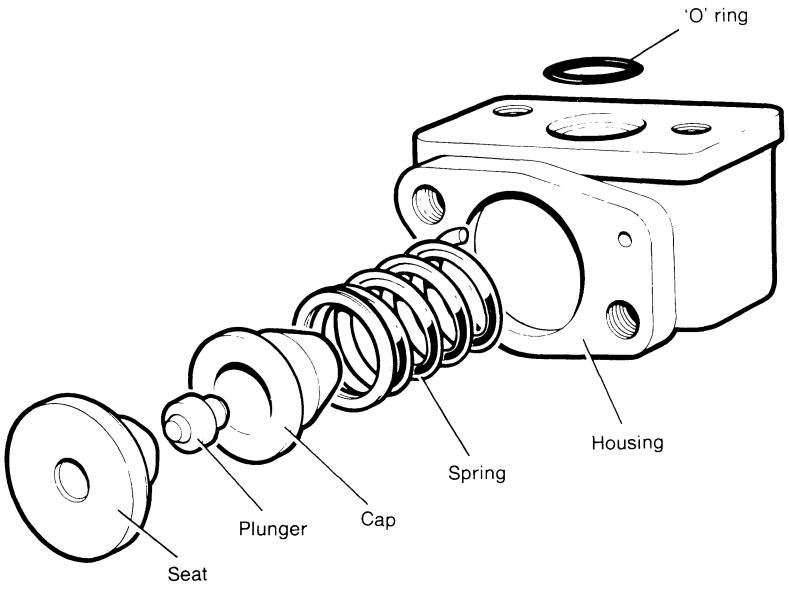

FIGURE 74 PRESSURE RELIEF VALVE ASSEMBLY

Pump Bleed Valve: Being fully automatic in operation, this valve requires no maintenance or adjustment To dismantle valve, hold valve body in a vice fitted with soft jaw grips Using a wide-bladed screwdriver, remove end plug from body: threads are peened over to lock plug in position. Withdraw spring, 'O' ring, valve seat, washer and steel ball. Before re-assembling valve, wash and inspect all components The steel ball should be free from any grooves: if necessary ball can be seated by placing it on seat (there is a groove on seat at end which ball seats against) and giving it a sharp tap Check that ball retainer is in position inside valve body, insert ball, sealing washer and seat: grooved end of seat against ball Place plunger in body, fit spring and 'O' ring in plug then screw plug into body Tighten plug until it becomes solid then lock in position by centre punching body threads at two opposite points

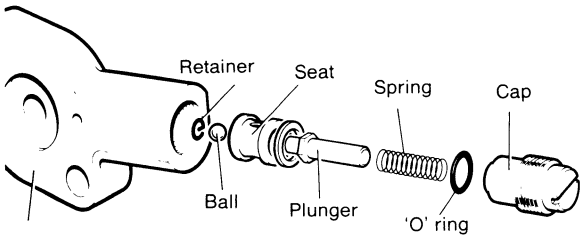

FIGURE 75
PUMP BLEED VALVE ASSEMBLY

Selectamatic Control Valve: As the main valve plungers are match-ground to their bores they cannot be replaced. The valve assembly can, however, be stripped, cleaned and re-assembled and as faulty operation is probably due to sticking caused by dirt, a valve should not be regarded as unserviceable unless it is found faulty during this examination

Dismantling the control valve:

Prepare a clean workbench, where components can be laid out and not mixed with components from any other valves being dismantled.

1. Remove the abutment plate, taking care of the shims.

2 Remove the two locknuts from the spool valve and withdraw the spool Do not attempt to remove the spool valve sleeve as this must not be replaced without special equipment to check that it is correctly sealed

3 Remove the two plugs from top of valve (only one if dump valve was fitted), lift out the springs then turn valve upside down so that hold and by-pass plungers fall out: the small steel ball inside hold valve plunger will also fall out If plungers do not fall out, insert a piece of 12mm ($\frac{1}{2}$in) diameter wood, or plastic, dowel into plungers so that they can be pulled out.

4 Remove relief valve plug and extract the spring, plunger, shims, seat and restrictor washer, taking care of the shims as these must be refitted as removed in order to maintain the original pressure setting

5 Remove the two plugs from left-hand side of body and extract the non-return and lowering control plungers

6 Remove plug from front of body and extract latching valve

7 Finally unscrew ferrule from underneath valve and allow TCU plunger, spring and ball to fall out

The valve is now dismantled as the remaining plugs and seats should not be disturbed

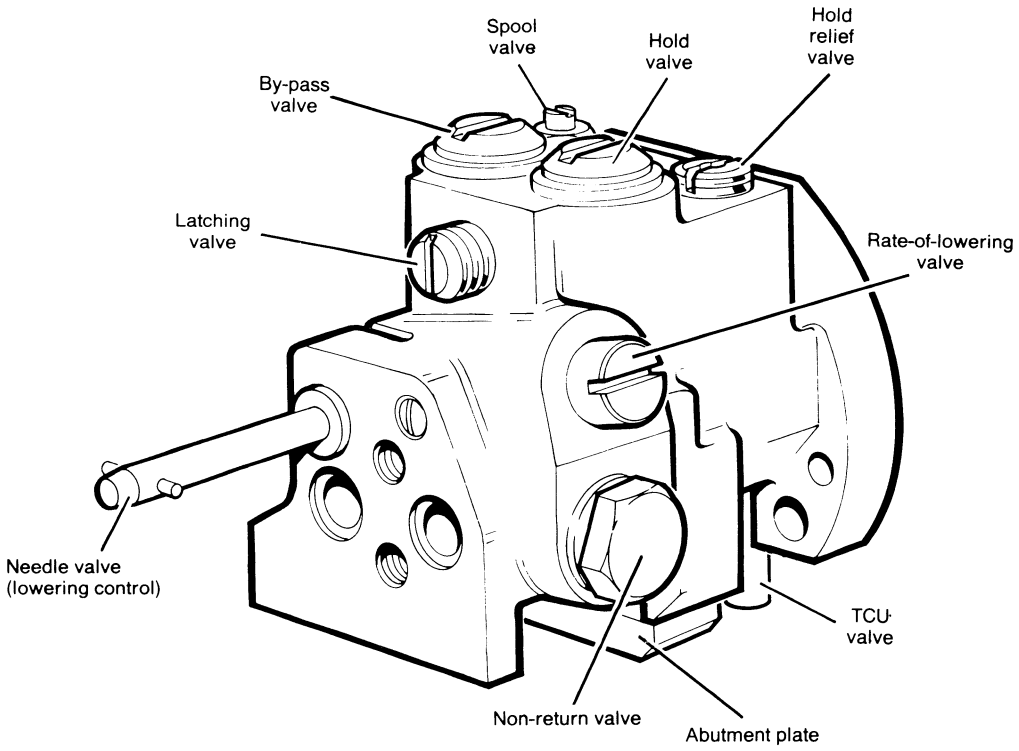

FIGURE 76 SELECTAMATIC CONTROL VALVE ASSEMBLY

Inspection and Rectification: Wash all components in paraffin do not use a cleaning solvent likely to attack the synthetic rubber seals and dry with an air blast. Do not use cloths as fibres may be left and cause trouble later. If by-pass plunger does not have a metering pin it will incorporate a small screen filter and this must be cleaned. Do not attempt to remove the filter but remove the small plug and restrictor washer from inside plunger then use an air jet to blow downwards, i.e. from inside to outside of plunger, so that any dirt on outside of filter will be blown away and not forced through filter screen. When filter is clear replace restrictor washer, ensuring that this is also clear, then replace and tighten plug. Check that the by-pass and hold plungers are free to slide and rotate with light finger pressure. If there are any signs of sticking the plungers may be lapped in with metal polish or jeweller's rouge mixed to a paste with paraffin or light oil, **Grinding paste must not be used for lapping-in the plungers.** If the plungers or bores, are scored or any of the seal faces worn, the valve is unserviceable and should be replaced with a new assembly as plungers are not supplied separately.

Assembling the control valve: After thoroughly cleaning the valve chest, taking special care to remove all traces of lapping compound, lay all components on a sheet of clean paper.

1. Fit thrust spring on lower end of spool valve, smear valve with clean oil then refit in its bore. Push spool against spring, fit flat washer and screw the two locknuts in position with fingers: they will be adjusted later.

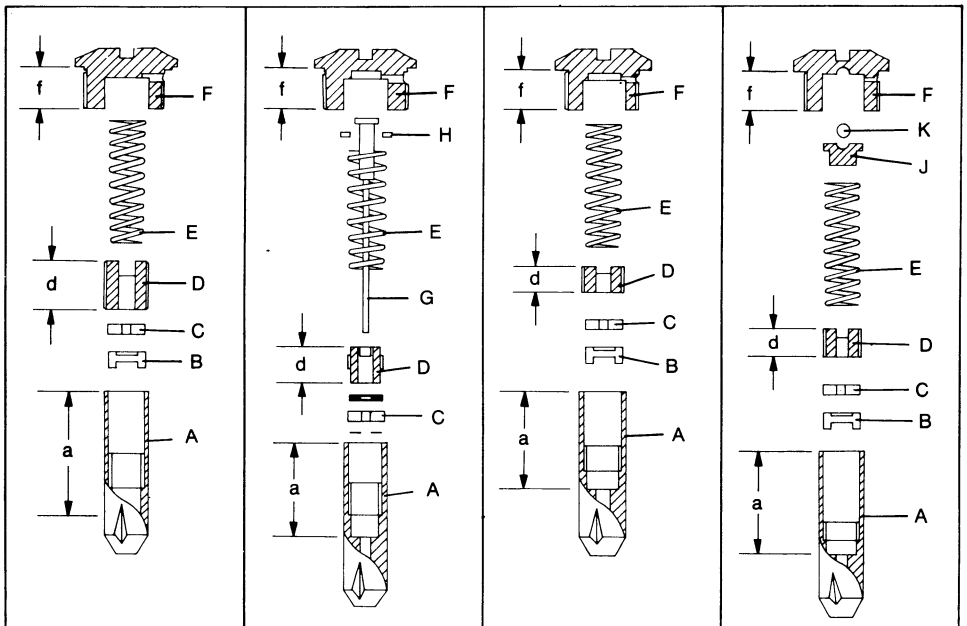

CONTROL VALVE ASSEMBLY	K915356 (S2)	K944678 (S3)	K947765 (S4 vertical grooves)	K947765 (S4 inclined grooves)
A By-pass plunger	Type 1	Type 2	Type 2	Type 3
a Recess depth	31·75mm (1·25in)	25·4mm (1·00in)	25·4mm (1·00in)	25 4mm (1 00in)
B Nylon filter	K921154	—	K921154	K921154
C Restrictor washer	K913621	K944289	K913621	K913621
c Hole diameter	0·51mm (0·020in)	1·75mm (0·069in)	0 51mm (0 020in)	0·51mm (0·020in)
Gasket — restrictor	—	K943899	—	—
D Screwed plug	K919634	K943901	K947759	K947759
d Length of plug	11·81mm (0·465in)	9 02mm (0 355in)	5 71mm (0 225in)	5 71mm (0 225in)
E Spring	K24832	K24832	K24832	K24832
F Flanged plug	K913242 (use K942892)	K942892	K942892	K948067
f Recess depth	8·7mm ($\frac{11}{32}$in)	7 9mm ($\frac{5}{16}$in)	7·9mm ($\frac{5}{16}$ in)	10·3mm ($\frac{13}{32}$ in)
G Metering pin	—	K944290	—	—
H Guide washer — pin	—	K626917	—	—
J Ball retainer	—	—	—	K947977
K Steel ball	—	—	—	K11548

Note: The control valve assembly K944585 used on 1410/1412 tractors is designated S5 and whilst this unit is similar to the later 12 series S4 unit with inclined grooves, there are a number of detail differences which make S4 and S5 valves NOT interchangeable.

FIGURE 77 IDENTIFICATION OF BY-PASS VALVE PLUNGERS

2 Smear by-pass and hold valve plungers with oil before placing them in their respective bores Place the small steel ball inside hold plunger followed by ball retainer, then replace springs, sealing washers and plugs Ensure sealing washers are in good condition and plugs are fully tightened

3 Lightly oil latching valve plunger before fitting it in its bore Replace spring and screw plunger tightly into position

4 After lightly coating non-return valve plunger with clean oil, place plunger in its bore then replace spring and plug Firmly tighten plug

5 Place restrictor washer in relief valve port and place seat on top of washer Refit shims, plunger, spring and cap, ensuring that shims are replaced exactly as removed so that the original pressure setting is maintained If the relief valve plunger or seat are not in good condition a new relief valve assembly should be fitted This assembly is supplied complete with the shims required to give the correct valve opening pressure and must be fitted complete, otherwise an incorrect pressure setting will be obtained.

6 Turn valve over, so that TCU valve port is towards top, then place steel ball in port followed by spring and plunger Screw ferrule loosely into valve to hold plunger in position

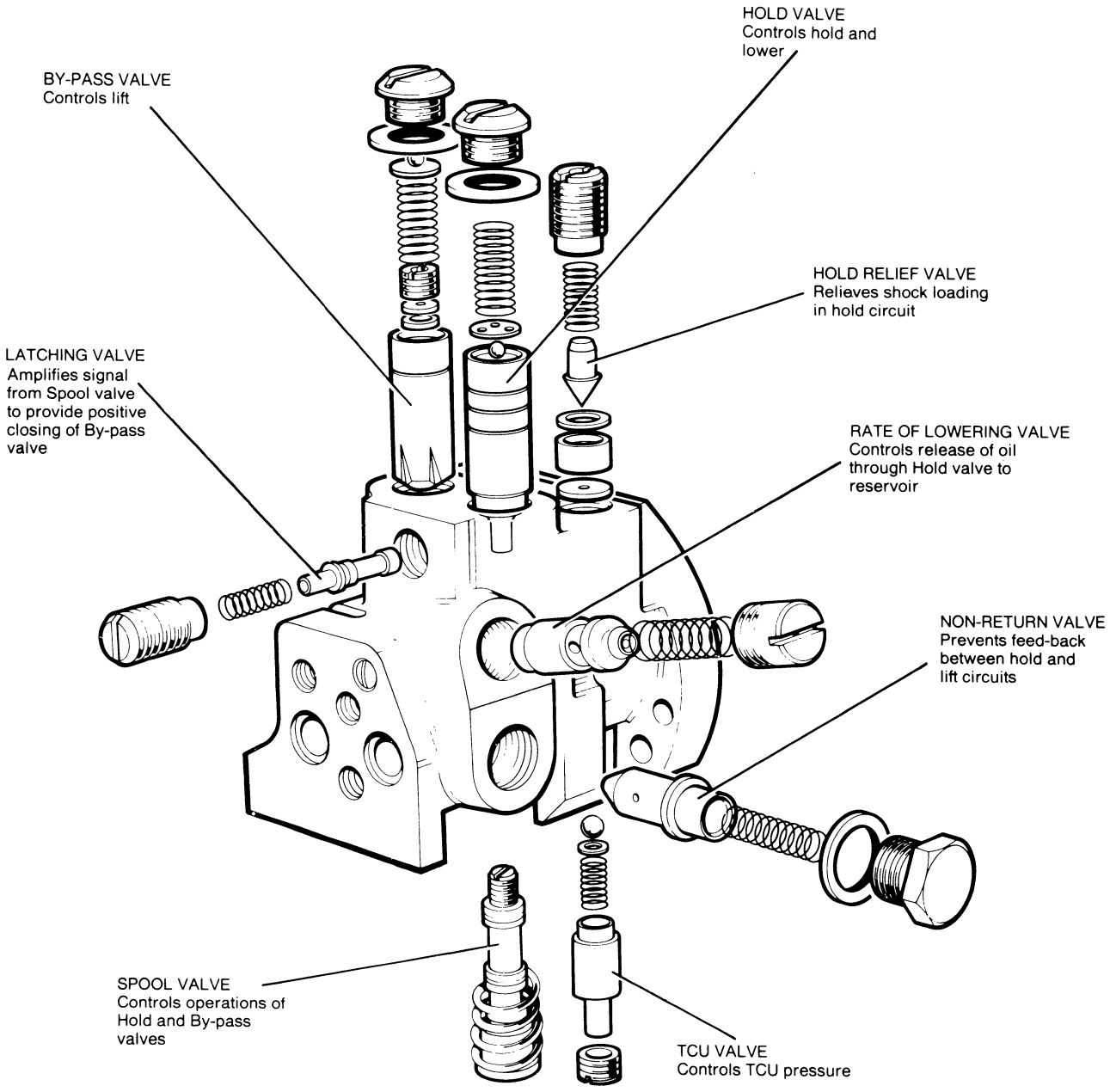

FIGURE 78 COMPONENTS OF SELECTAMATIC CONTROL VALVE

† **Spool and TCU Valve Adjustment:** After the control valve has been assembled, the spool and TCU valves must be adjusted A mark on the end of the spool valve will give the correct setting for the spool valve The TCU valve setting is always the same

† **Spool Valve:** Make a note of the dimension on the end of the spool valve. Hold the control valve in a vice with the spool valve horizontal Put a dial gauge in the position shown (Figure 79) The probe of the dial gauge must be horizontal and in the centre of the spool valve Make sure that the probe of the dial gauge and the spool valve make contact in this position If they do not, the dial gauge will not show full movement of the spool valve

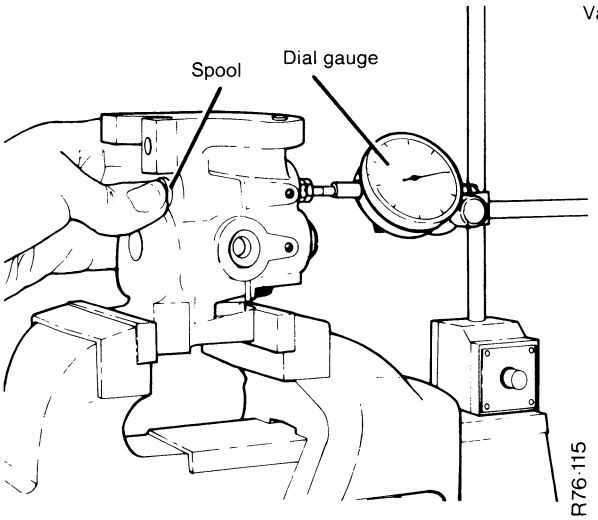

FIGURE 79
SPOOL VALVE ADJUSTMENT

Push the spool valve fully in With the spool valve in this position, adjust the dial gauge to zero Let the spring on the spool valve slowly push the spool valve out. Note the movement of the pointer of the dial gauge Compare the pointer movement with the dimension given on the spool valve If the pointer movement is more than the given dimension, tighten the locknuts If the pointer movement is less, loosen the locknuts Repeat the operation until the pointer movement is no more than 0 025mm (0 001in) different to that of the given dimension

† **TCU Valve:** Hold the control valve in a vice with the TCU plunger vertical. Tighten the ferrule until the plunger has almost no movement, then loosen the ferrule two thirds of a turn Put a dial gauge in the position shown (Figure 80) The probe of the dial gauge must be vertical and in the centre of the plunger Make sure that the probe of the dial gauge and the plunger make contact in this position If they do not, the dial gauge will not show the full movement of the plunger Lift the plunger with a pair of pliers Hold the plunger against the ferrule and adjust the dial gauge to zero Let the plunger slowly drop down Note the movement of the pointer of the dial gauge The plunger should move 0 86 – 1 00mm (0 034 – 0 040in) If the pointer movement is more, tighten the ferrule by a small amount If the pointer movement is less, loosen the ferrule by a small amount Repeat the operation until the movement is correct

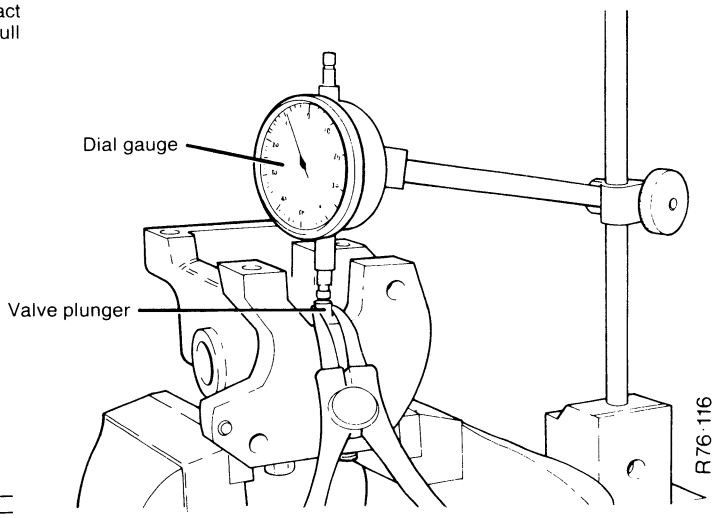

FIGURE 80
TCU VALVE ADJUSTMENT

† **Dump Valve:** No maintenance or adjustment is needed to the dump valve, unless there is leakage If there is leakage from the valve, new seals must be fitted Fit new seals as follows

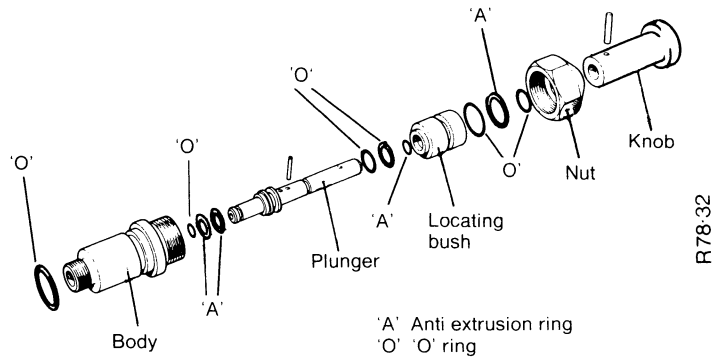

FIGURE 81
† DUMP VALVE — 12 SERIES

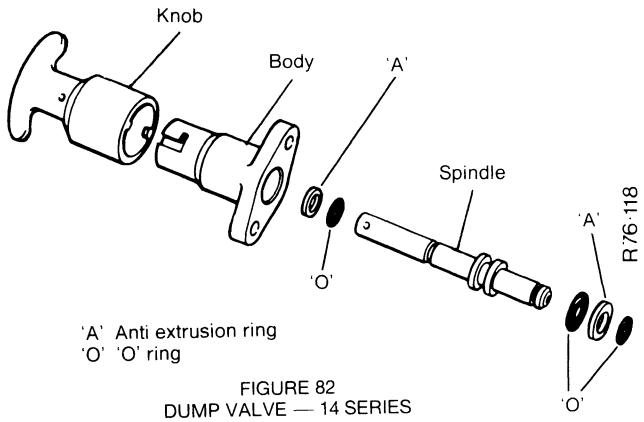

'A' Anti extrusion ring
'O' 'O' ring

FIGURE 82
DUMP VALVE — 14 SERIES

† **12 Series Tactors:** Carefully hold the body of the dump valve in a vice Pull knob up and turn the special nut counter clockwise, until free of thread Pull knob to remove plunger and locating bush from body of dump valve Pull out pin in knob and remove knob, special nut and locating bush Remove and destroy 'O' rings and anti extrusion rings Note: Anti extrusion rings were not fitted to earlier dump valves The parts for these dump valves cannot be used in later dump valves Wash all parts in clean fuel oil Remove fuel oil with air Fit new anti extrusion rings and 'O' rings to plunger and locating bush Make sure the rings are in the correct position (Figure 81) and are not twisted. Apply a little grease to the rings Fit locating bush on plunger Put a new sealing ring on top of locating bush then put special nut on top of sealing ring Fit knob on the plunger and carefully push pin in hole Fit knob, special nut and plunger in body of dump valve Tighten special nut and check that the knob will pull up and push down correctly Fit new sealing ring on outside of the body of the dump valve Make sure the sealing ring is not twisted and is on its seat Apply a little grease to sealing ring

† **14 Series Tractors:** Pull out pin in knob Remove knob and push plunger out of body of dump valve Remove and destroy anti extrusion rings and 'O' rings Wash all parts in clean fuel oil Remove fuel oil with air Fit new anti extrusion rings and 'O' rings Make sure the rings are in the correct position (Figure 82) and are not twisted Apply a little grease to the rings Push plunger into body of dump valve Fit knob on plunger and carefully push pin in hole Check that the knob will pull up and push down correctly

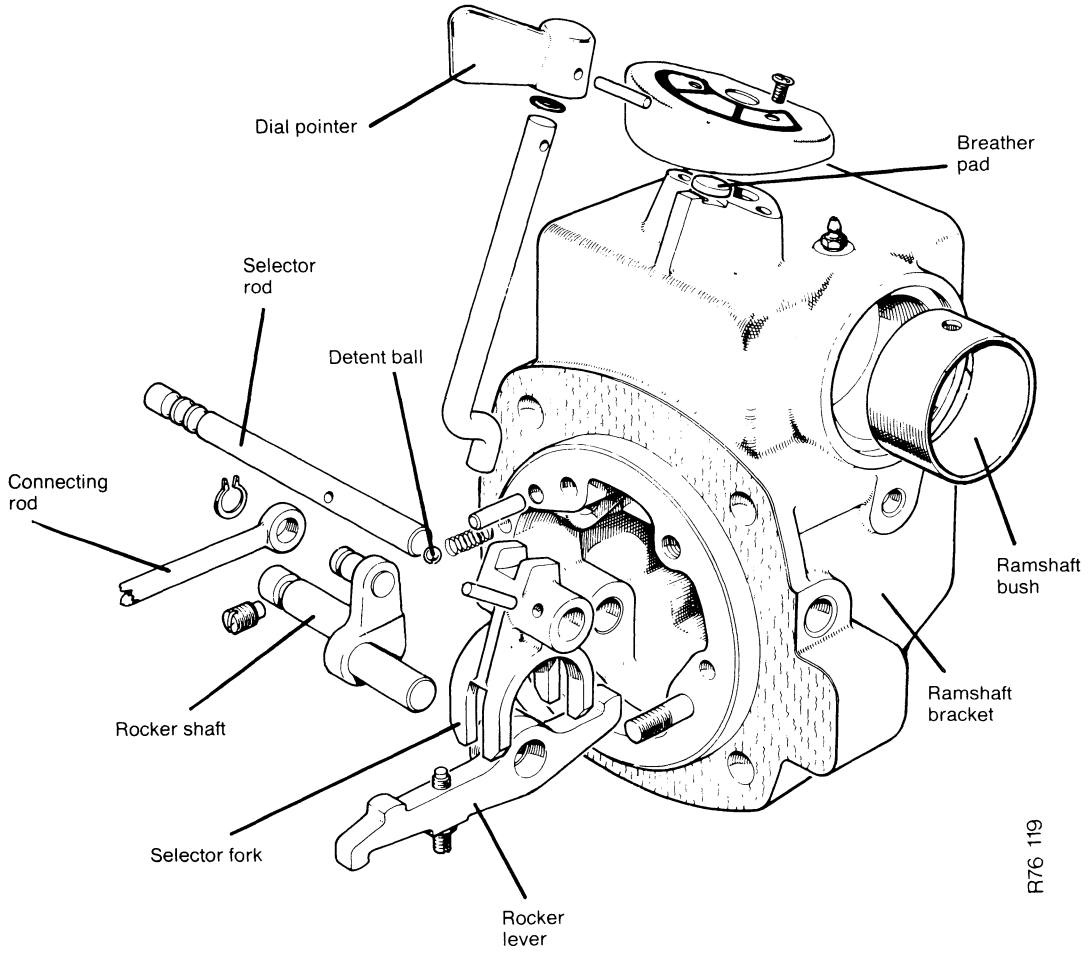

FIGURE 83 DIAL POINTER MECHANISM

Selector Dial Pointer Mechanism: Not requiring any adjustment or maintenance this mechanism need only be disturbed if wear, or damage causes malfunctioning

1 Drive spring pin from selector fork, taking care not to bend shaft

2 Remove plug from left-hand side of bracket early tractors have a core plug here, which can be removed by driving a small punch into centre of plug then levering out Using a small drift through plug hole, drive selector shaft out until it will allow fork to be removed After removing fork, push selector rod out of bracket, noting that a detent ball and spring are located under the rod and will be displaced when rod is finally withdrawn When shaft has been removed extract spring from its hole by inverting bracket and allowing spring to fall out, or hooking spring out with a piece of bent wire

3 Remove rocker shaft locating screw, this is on front face of bracket and may be covered if gasket is still adhering to face Slide rocker arm off shaft then turn shaft until arm pin is towards centre of bracket and remove by sliding shaft sideways into bracket It is not necessary to remove core plug sealing rocker shaft hole in the side of bracket

4 Remove spring pin from dial pointer and pull pointer off its shaft Shaft can then be withdrawn downwards out of bracket Remove the two screws holding indicator panel on top of bracket, lift off panel, remove breather pad and 'O' ring

5 Ramshaft bush need not be removed unless it is to be renewed but if worn can be removed by driving it inwards into bracket

Assembly Selector Mechanism

1 After cleaning all components, commence assembly by fitting a new ramshaft bearing bush Press bush carefully into bracket, positioning hole through bush in line with grease nipple and split in bush towards rear axle case side of bracket

2 Replace spring anchor, breather pad and 'O' ring in their positions on top of bracket then replace indicator panel Smear selector rod with oil before fitting it into position Turn rod so that crank is pointing inwards into bracket then fit dial pointer and secure with spring pin After fitting pin, check that dial pointer can be turned quite freely

3 Smear rocker shaft with oil then slide it into position, turning shaft so that crank clears inside of bracket Fit rocker lever on to shaft, longer end of lever outward and flange on bush towards rocker shaft, then fit locating screw to retain shaft in position Fit a new core plug to seal rocker shaft hole in outside of bracket if original plug has been removed

4 Place detent spring in hole in face of bracket and place detent ball on top of spring Smear selector shaft with oil and push plain end of shaft into right-hand side of case until it touches detent ball Using a small punch to hold ball against its spring, push shaft until it rides over ball and allows punch to be removed Fit selector fork over rocker lever and engage selector shaft into fork so that when fork is held stationary and the shaft pushed inwards it is pushed through fork Align shaft and fork pin holes then replace pin Turn dial pointer to each of the three positions, to check that it operates freely then replace plug in left-hand side This plug is a stop for the selector shaft and should be smeared with Loctite before screwing into case. Turn dial pointer to TCU/EXT position and tightening plug until it just contacts selector shaft then unscrew it quarter-of-a-turn and lock by peening case against plug threads with a centre punch Fit new core plug in right-hand side of bracket

Oil Cooler Valve: Having removed valve from tractor, wash valve in kerosene and dry with an air blast

To dismantle control valve

1 Remove locking screw from control knob then pull knob from spindle

2 Remove core plug and felt pad from body these are at opposite end of body to control knob

3 Carefully push the knob spindle into valve body until opposite end of spool is exposed just sufficient for the spool sealing rings to be clear of body

4 Remove 'O' ring and anti-extrusion ring from spool

5 Unscrew seal housing from end of bore, this is $\frac{11}{16}$in AF

6 Remove spool from body by pushing spool out from the core plug end of bore

7 Examine spool and valve body spool bore

Assembling Control Valve

1 Wash spool and spool bore in valve body in kerosene, or diesel fuel, and clean with an air blast

2 Lubricate spool and bore with clean transmission oil

3 Fit new 'O' ring and anti-extrusion ring on knob spindle end of spool Fit plastic ring first and place 'O' ring towards centre (pressure side) of plastic ring

4 Dip spool in *clean* oil then push it into valve body just sufficient to allow remaining sealing rings to be fitted **If spool is pushed through too far the previously assembled sealing rings will be damaged as they pass the sharp edges of the oil ports.**

5 After fitting a new anti-extrusion ring, fit a new 'O' ring on valve body side of backing ring Smear rings with oil then push spool into body until spool end is just below end of bore **Pushing spool too far will allow the newly installed sealing rings to be damaged by the oil ports.**

6 After fitting a new scraper ring in seal housing, clean the housing threads free from oil before smearing with a non-hardening jointing compound Screw housing into body and tighten to 8 3kg metres (60lb ft)

7 Push spool against seal housing and replace washer, felt pad and core plug in end of bore

8 Replace knob on spool spindle Smear locking screw threads with jointing compound before screwing it into knob

9 Operate knob to check that spool moves freely

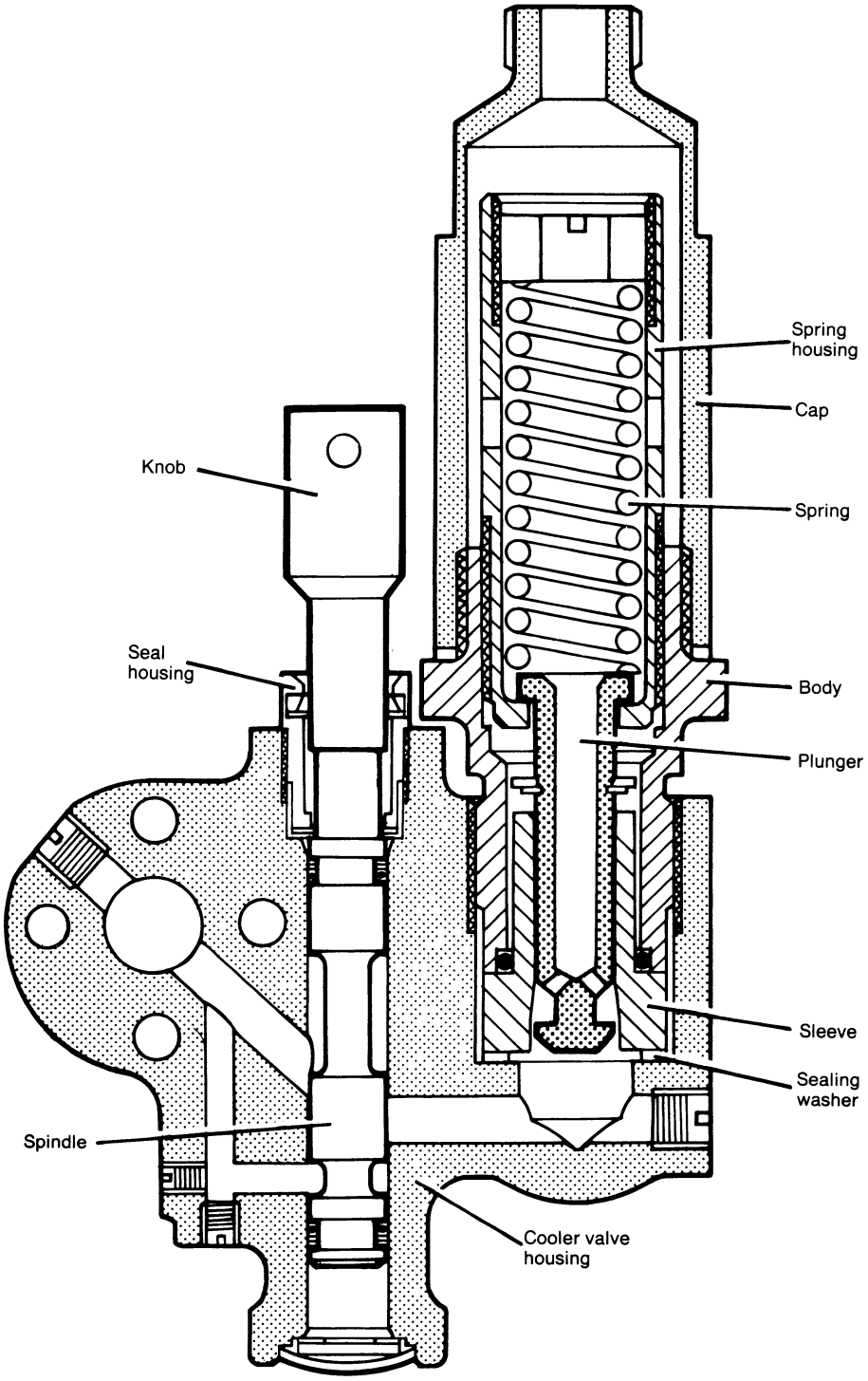

FIGURE 84 OIL COOLER VALVE

9-37241

To dismantle a flow control valve.

1. Unscrew valve assembly, this is 1½in AF, from body, lifting plunger sleeve out with valve.

2. Hold flow control valve body loosely in a vice and unscrew end cap.

   Caution: Do not attempt to dismantle the valve any further without first **carefully marking the exact positions of the spring retainer plug and spring housing.** The only satisfactory way of setting a valve is by using equipment capable of measuring both flow and pressure, it is therefore, essential that the original factory setting is maintained when the valve is re-assembled

3. Separate plunger sleeve from valve body, this is only retained with an 'O' ring.

4. After **marking its exact position,** unscrew spring retainer plug, using a screwdriver, then extract plunger spring

5. After **marking its exact position,** unscrew spring housing from valve body then separate plunger by removing circlip and washer.

Assembling a flow control valve.

1 Wash and examine all components. Renew the two aluminium sealing washers and the sleeve 'O' ring. The plunger and sleeve are match ground and must therefore, be replaced together.

2 Fit plunger in spring housing then replace spring retainer plug, **screwing this into its original position.** Retainer plug threads are nylon-coated to make them self-locking.

3 Replace washer and circlip on plunger then assemble spring housing in body, **screwing housing into the body until it reaches its original position.** The housing threads are nylon-coated to make them self-locking.

4 Fit 'O' ring on sleeve, smear plunger with **clean** oil then fit sleeve on plunger

5 After fitting a new sealing washer on housing, refit end cap and tighten to 8·3kg metre (60lb ft)

6 Place a new sealing washer in bottom of valve housing bore then screw assembly into the valve body and tighten 8·3kg metre (60lb ft)

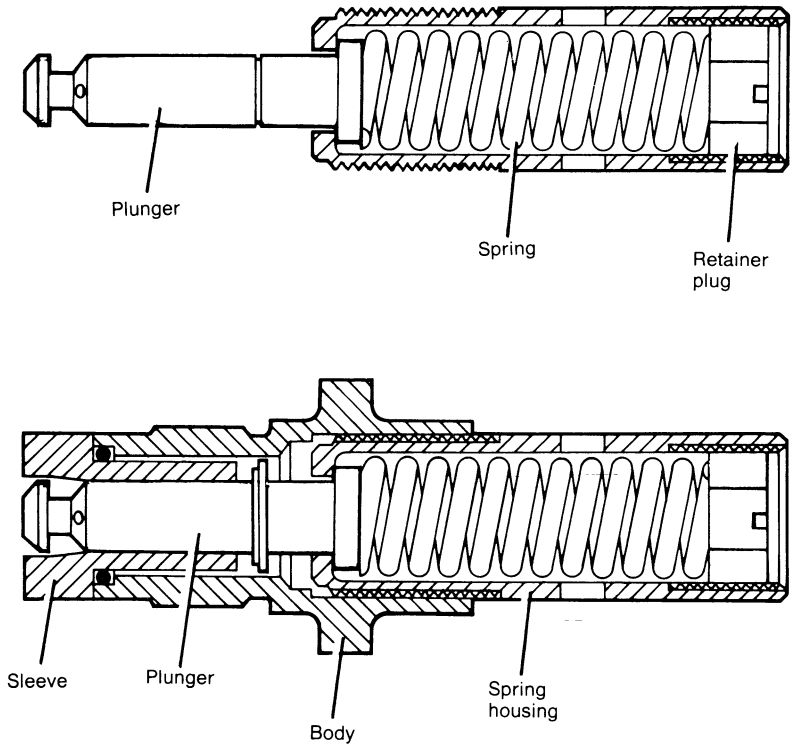

FIGURE 85 ASSEMBLING OIL COOLER VALVE

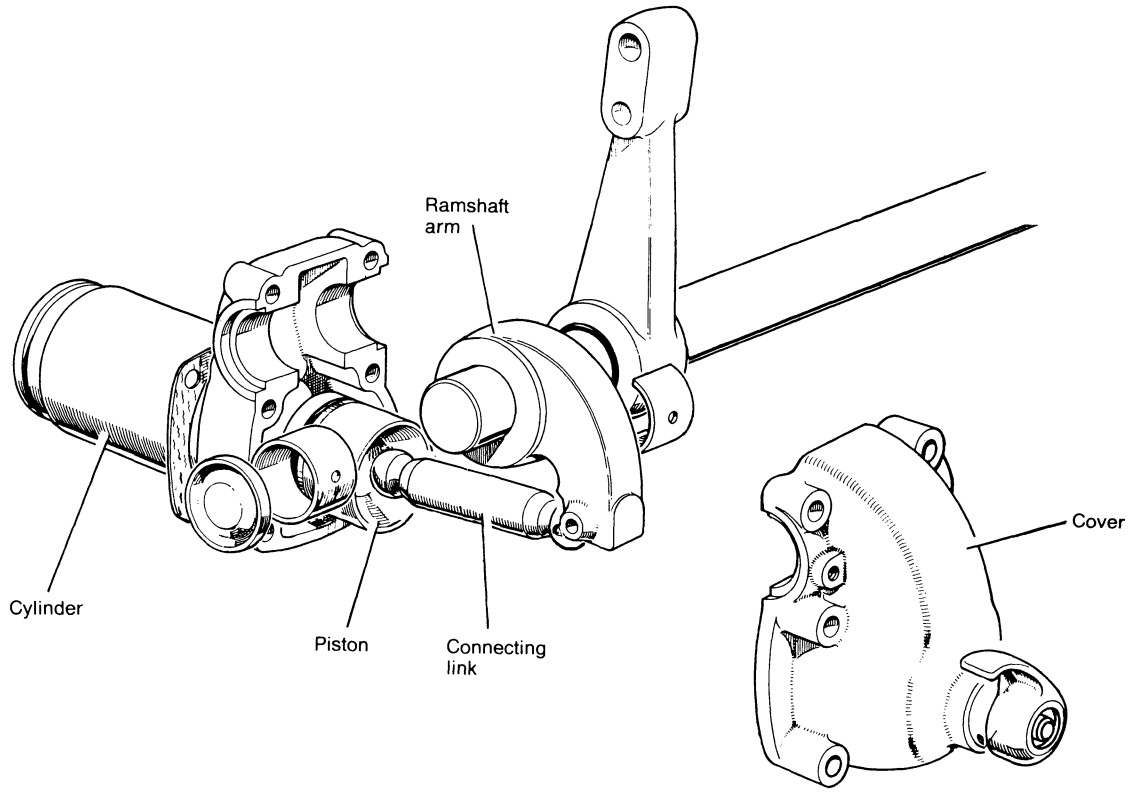

FIGURE 86 RAM CYLINDER — 12 SERIES

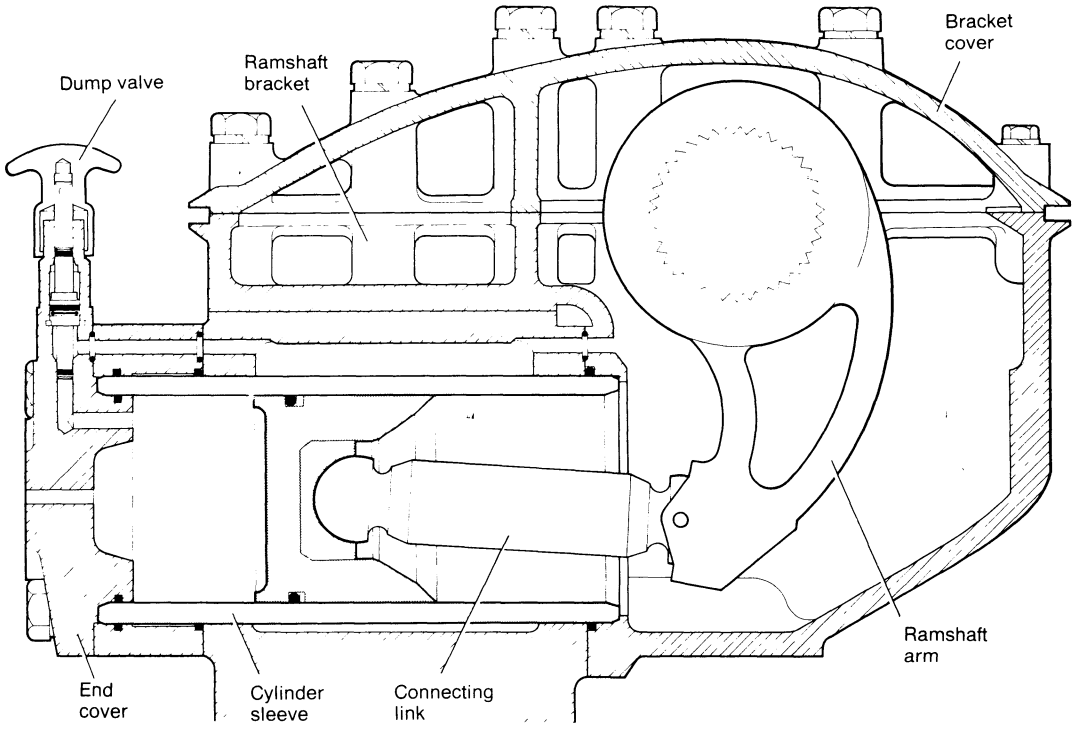

FIGURE 87 RAM CYLINDER — 14 SERIES

Ram Cylinder: Subject to availability of oversize pistons, a cylinder with worn or damaged bore may be reconditioned by reboring and a 0·020in oversize piston fitted. As a bored finish is too rough for the 'O' ring to operate against, **the cylinder must be honed after boring.** The bore must be honed to a surface finish not greater than 16 micro-inches, centre line average, which is a highly polished finish, otherwise the 'O' ring will fail to make a seal after a short period of service. Oversize sealing rings are not available: oversize pistons are made to utilise standard sealing rings, which can easily accommodate the small increase in bore size.

Piston seals: The rubber 'O' ring is backed by a leather ring, which prevents the 'O' ring from being extruded into the clearance between piston and bore. The anti-extrusion ring must, therefore, always be fitted on the skirt (non-pressure) side of the 'O' ring.

When fitting new piston seals, soak leather anti-extrusion ring in thin oil for thirty minutes. Clean the piston and fit leather ring first, taking care not to stretch ring further than necessary and positioning ring so that rough side of leather is towards piston crown, *i.e.* on the 'O' ring side. Fit a new 'O' ring on crown side of leather ring and when 'O' ring is in position examine leather ring to ensure that it stands proud of piston all the way round its circumference Allow leather ring to settle after being stretched over piston.

Clean bore and piston then smear piston with clean oil before fitting it into ram cylinder. Edge of bore is chamfered to assist entry of sealing rings and if cylinder is installed on tractor open the vent valve, or open dump valve on 14 series tractors to prevent air being trapped behind piston.

Locking Latch: On 12 Series tractors the ram cylinder cover incorporates a latch which, when released, engages under the ramshaft arm and locks the linkage in the raised position. To strip the locking latch, turn operating lever into 'engage' position and remove circlip from end of latch pin. Removing operating lever and dirt excluder will then expose another circlip. Remove locating screw from cover boss then remove the second circlip and push the latch pin inwards out of the cover Remove 'O' ring, spacer and spring from pin

Do not attempt to remove the two needle rollers unless they are to be renewed, and take care that they are not damaged by careless handling of cover: the rollers are hard and will break before bending.

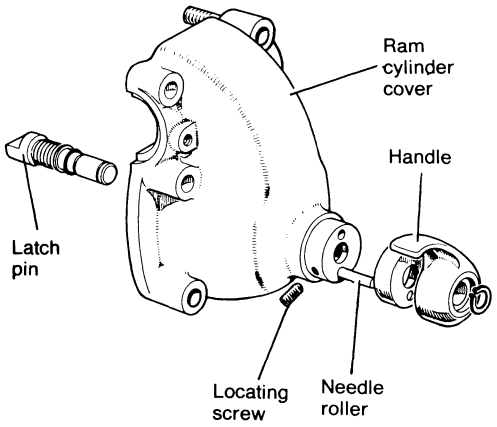

FIGURE 88
LINKAGE LOCKING LATCH — 12 SERIES

In the event of a roller being broken in the cover, two new holes should be drilled as the rollers are too hard to be drilled out. When fitting new rollers press them into the cover until ends of rollers are 18·49 – 18 24mm (0·728 – 0·718in) from cover face If roller protrusion is outside these limits the latch pin will either not disengage or have insufficient hold on ramshaft arm to support heavy loads on linkage.

To assemble the cover, fit spring, spacer ring and 'O' ring on latch pin, taking care that 'O' ring is not damaged as it passes over circlip grooves Smear pin with clean oil and refit inside cover, aligning the pin groove with locating screw hole in cover boss. Clean locating screw, smear threads with Loctite (hydraulic seal grade) then screw it in until it touches bottom of pin groove and **unscrew** a quarter turn. Push pin into postion to compress spring and expose inner circlip groove Replace circlip, smear pin and needle rollers with grease then refit dirt excluder Push latch, to compress spring, then refit operating lever, in 'engage' position and replace outer circlip. Finally turn operating lever several times to check that latch pin slides freely.

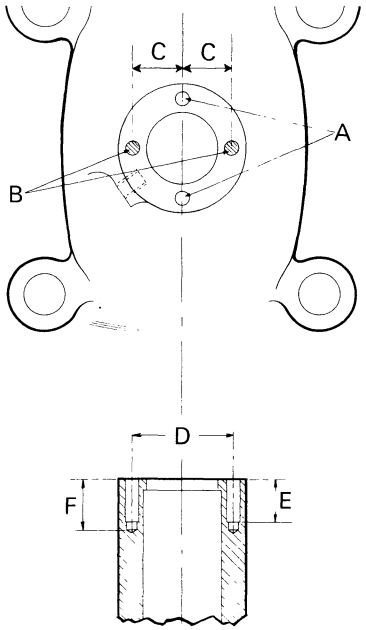

FIGURE 89
RE-DRILLING RAM CYLINDER COVER

Drill two holes 4 5mm ($\frac{11}{64}$in) diameter and 19 05mm ($\frac{3}{4}$in) deep at positions shown then ream to 4 37 – 4 75mm (0 1865 – 0 1870in) and 15 9mm ($\frac{5}{8}$in) deep.

A. Original holes B. New holes
C 17 46 – 17 48mm (0 6875 – 0 6885in)
D 34 92 – 34 97mm (1·375 – 1 377in)
E. 15 7mm ($\frac{5}{8}$in) F 19·05mm ($\frac{3}{4}$in)

Ramshaft arm: The ramshaft arm is splined and shrunk on to the ramshaft. A new arm may be fitted, if a new part is available and provided that:—

1. The original position of the arm is clearly marked and the assembly marks on arm and shaft splines are visible.

2 The arm is first cut so that it can be split to release its grip on shaft, before being removed Removing an arm without first splitting it will reduce the shaft interference fit and allow the new arm to work loose

3 Heat the splined end of the new arm to 500°C (900°F) before pressing it on shaft until it reaches the exact position of the original. Do not heat the spherical seat end of the arm: this will destroy the heat treatment and soften the seat surface.

Linkage Support Ram: Clamp the ram horizontally in a vice. Holding it in the centre and not gripping it tight enough to distort the ram case. Insert a screwdriver blade under the lip of the scraper seal, lift seal from its retaining groove then slide it along ram rod.

Insert a pair of circlip pliers into cut-out in sleeve and compress the circlip Whilst holding circlip central in sleeve, pull ram rod past the end of its stroke so that it pulls the sleeve with it and moves circlip clear of its groove. When circlip has been displaced from its groove, pull ram rod and sleeve out of case.

To remove sleeve from ram rod remove the two circlips and stop ring from inner end of rod then slide sleeve off rod. **Do not grip the ram rod between vice jaws,** unless they are fitted with soft jaw grips

Ram seals: The sleeve has seals both outside and inside. The outer seal consists of an 'O' ring with a leather anti-extrusion ring and prevents oil leaking between sleeve and cylinder The inner ram rod seals consist of an 'O' ring with leather anti-extrusion ring plus a separate Nu-lip sealing ring and an external scraper seal

Clean the sleeve, after removing the old seals. Soak the leather rings in engine oil for at least 30 minutes, to allow them to be stretched without damage, and fit these first. Place the rings so that the rough (hair grain) side of ring is towards the inner end of sleeve then fit 'O' rings against the rough side The 'O' rings should then be on the inner (pressure) side of the leather rings and the leather rings positioned with the rough side against the 'O' ring. Ensure that 'O' rings are pressed down into bottom of groove but do not press them into position with anything sharp, such as a screwdriver as this may cut the ring, roll them into position with finger pressure Fit the Nu-lip seal in its groove, taking care not to damage the seal corners.

Assembling the Ram: Wipe ram rod clean, then smear with clean oil and slide a new scraper seal on to rod. Smear inside of sleeve with oil then carefully slide sleeve, with circlip in position, on to ram rod. End of ram rod is chamfered but take care to ensure that seals are not damaged as they pass over rod end. After fitting sleeve on ram rod, replace stop ring and **both** circlips.

Clamp the ram case horizontally in a vice holding it in the centre but not gripping it tight enough to distort case.

Fill circlip groove in case with thick grease and smear outside of sleeve with oil. Fit ram rod into case and slide sleeve into case end. Take special care when pushing sleeve seals past the circlip groove: the groove corner is chamfered and the grease will also assist the seals to pass the groove without being damaged.

Compress circlip and hold it central so that sleeve can be pushed 'fully home' and circlip seated in its groove. Finally slide scraper seal along rod and carefully push it on to sleeve until seal inner lip engages on to sleeve shoulder.

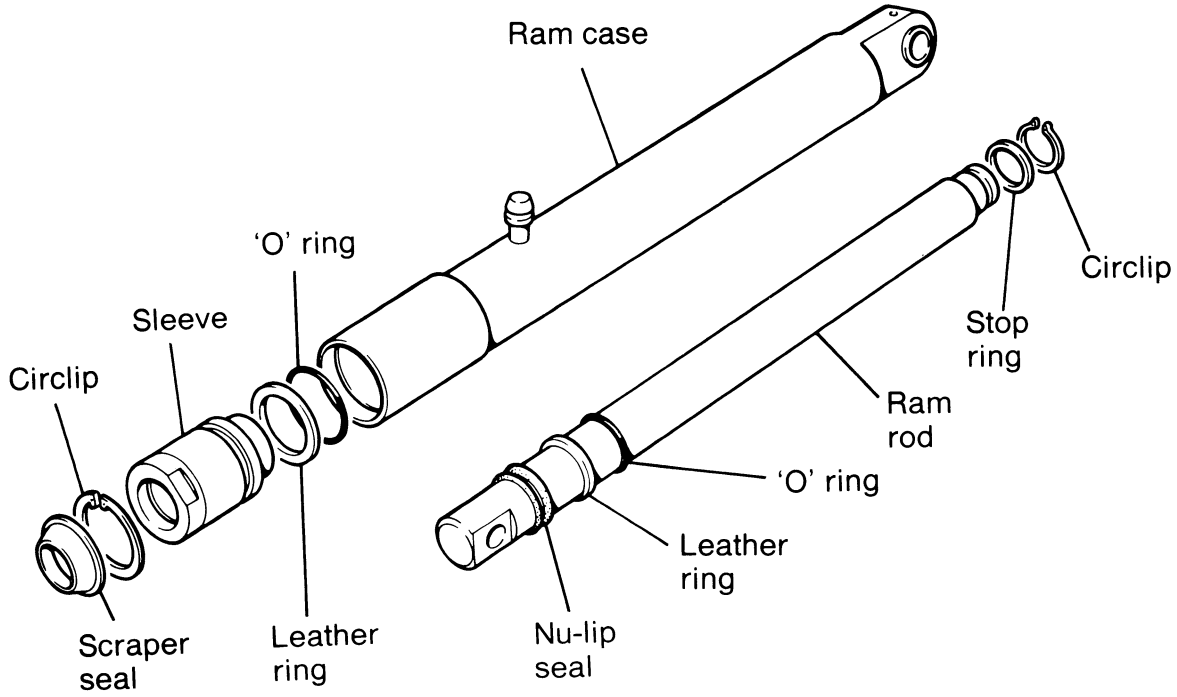

FIGURE 90 COMPONENTS OF LINKAGE SUPPORT RAM

Sensing Unit

The sensing unit and flexible cable should be lubricated every 60 hours through the grease nipples in centre of cable and sensing unit housing.

When stripping a sensing unit for examination always examine the flexible cable. With cable disconnected from sensing unit, grip cable nipple with a pair of pliers and whilst holding outer cable stationary, pull inner cable against its spring. If spring withdraws the cable as soon as it is released the cable is satisfactory but if cable is not withdrawn by spring, or if it is too tight to be pulled out, the cable should be renewed.

Single rate sensing unit

To dismantle unit, remove the four setscrews from end-plate and insert a bar through link pin hole then pull shaft, complete with end-plate, out of housing. Do not drive a screwdriver between end-plate and housing as this will damage the shims.

Check that the end-plate is free to slide on shaft sleeve and the end collar is free to slide in housing bore.

To dismantle shaft, drive pin out of collar and shaft then tap thrust washer and collar off shaft. Do not attempt to remove collar and spring by pressing shaft out of end-plate — the end-plate cannot be removed until sleeve is removed from shaft. The sleeve is screwed on to shaft and can be removed by holding the two flats on sleeve between vice jaws then turning the shaft by means of a bar through the link pin hole.

To assemble unit, clean shaft and sleeve threads before applying a few drops of Loctite (grade 270). Fit a new 'O' ring inside end-plate bore, smear with grease and place end-plate on sleeve before screwing sleeve firmly on to shaft. Replace spring, thrust washer and collar on shaft then fit retaining pin through collar. When pin is in position check spring end float; if this is more than 0·25mm (0·010in) remove collar pin and fit a thicker thrust washer so that end float is reduced to a minimum without spring being compressed.

Thrust washer details:

Part No.	Thickness
915112	9·02mm (0·355in)
915113	9·27mm (0·365in)
915101	9·52mm (0·375in)
915114	9·78mm (0·385in)
915115	10·23mm (0·395in)
915116	10·29mm (0·405in)

When collar is finally fitted, check that pin protrudes equally through both sides of collar and pin ends are not damaged. Pin must slide freely in the housing slots and, if necessary, clean ends of pin with a file.

Smear shaft collar with grease and replace shims on end plate. Fit shaft assembly in housing and replace the four end-plate set screws. Check shaft end float whilst evenly tightening the screws and note that it reaches a minimum when screws are fully tightened. If tightening setscrews does not reduce shaft end float to less than 0·25mm (0·010in) the shim thickness is too great. If tightening the setscrews reduces but then increases the shaft end-float as the screws are fully tightened the spring is being compressed, due to an insufficient thickness of shims

End-plate shims:

Part No.	Thickness
915096	0·13mm (0·005in)
915097	0·25mm (0·010in)
915098	0·76mm (0·030in)

Pack end of housing bore with grease, smear core plug with jointing compound then refit plug. Apply a few shots of grease through the housing grease nipple.

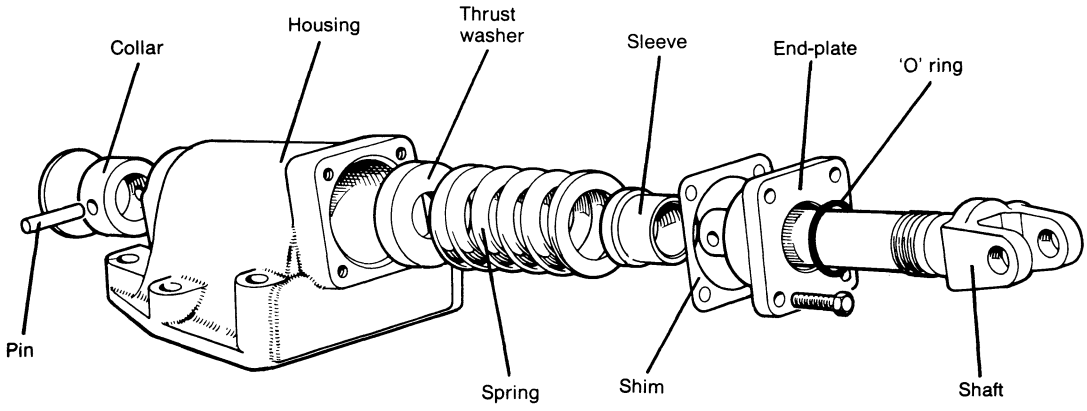

FIGURE 91 COMPONENTS OF SINGLE RATE SENSING UNIT

Adjustable Sensing Unit

To dismantle unit, remove linch pins then separate the two link plates and remove frame from shaft.

Remove the four setscrews from end-plate then insert a bar through link pin hole and pull shaft, complete with end-plate out of housing. Do not drive anything between end-plate and housing as this will damage the shims

To dismantle the shaft assembly, drive pin out of collar on shaft end then remove collar, thrust washer and spring. Do not attempt to press shaft out of end-plate — this cannot be removed until sleeve is removed.

To remove end cover and sleeve, grip the two flats on sleeve between vice jaws then place a bar through link pin hole and unscrew shaft out of sleeve.

To assemble unit; clean shaft and sleeve threads before applying a few drops of Loctite (grade 27). Ensure that end-plate slides freely over sleeve then fit a new 'O' ring in end-plate bore before smearing bore with grease. Place distance piece, end-plate and sleeve on shaft then firmly screw shaft into sleeve.

Replace spring, thrust washer and collar on shaft then fit retaining pin through collar When pin is in position check spring end float; if this is more than 0·24mm (0·010in) remove collar pin end, fit a thicker thrust washer, so that end float is reduced to a minimum without spring being compressed.

Thrust washer details:

Part No.	Thickness
915112	9·02mm (0·355in)
915113	9·27mm (0·365in)
915101	9·52mm (0·375in)
915114	9·78mm (0·385in)
915115	10·23mm (0·395in)
915116	10·29mm (0·405in)

When collar is finally fitted, check that pin protrudes equally through both sides of collar and pin ends are not damaged. Pin must slide freely in housing slots and if necessary clean ends of pin with a file.

Smear shaft collar with grease and replace shims on end-plate. Fit shaft assembly into housing and replace setscrews. Check shaft end float whilst evenly tightening the screws and note that it reaches a minimum when screws are fully tightened. If tightening the setscrews does not reduce the shaft end float to less that 0·25mm (0·010in) the shim thickness is too great. If tightening the setscrews reduces but then increases the end float as the screws are fully tightened the spring is being compressed due to an insufficient thickness of shims.

End-plate shims

Part No.	Thickness
915096	0·13mm (0·005in)
915097	0·25mm (0·010in)
915098	0·76mm (0·030in)

Pack end of housing bore with grease, smear core plug with jointing compound then refit plug, apply a few shots of grease through housing grease nipple, refit frame and link plates.

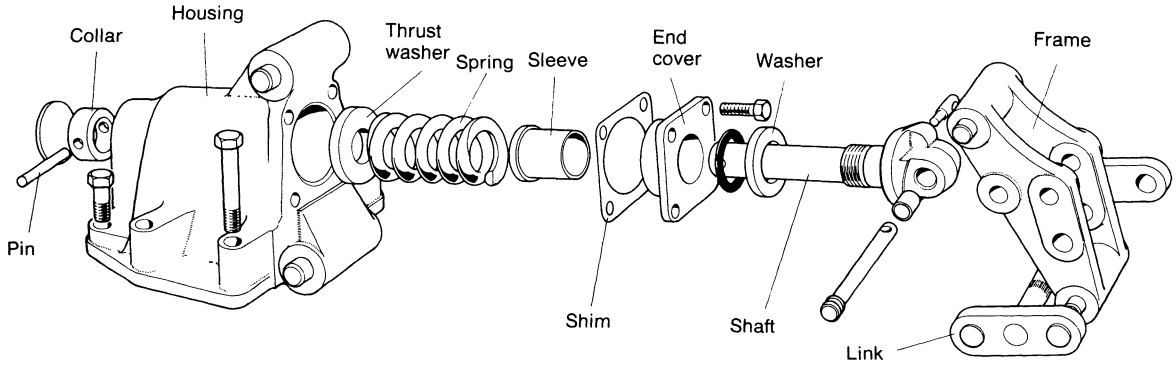

FIGURE 92 COMPONENTS OF ADJUSTABLE SENSING UNIT

Selective Sensing Unit: To dismantle unit, lever out core plug from top of housing and place selector lever in vertical position. Remove the four end-plate bolts and withdraw shaft assembly by placing a bar through the link pin hole. When shaft has been withdrawn far enough for rack to be disengaged from pinion turn shaft 45° anti-clockwise to bring rack teeth opposite cut-out in housing then draw shaft assembly out of housing.

Selector pinion can be removed, if necessary, by removing the grubscrew from housing and withdrawing the detent spring and plunger. Turn pinion so that its retaining pin can be driven out — taking care not to bend the spindle — then, using a thin spanner, unscrew the screwed bush to withdraw handle and spindle

To dismantle shaft assembly, remove pin attaching end collar to shaft then slide the springs, carrier and thrust washer off the shaft, taking care of the shims fitted between the springs.

End-plate can be removed by holding the two flats on sleeve between vice jaws then using a bar through link pin hole to unscrew the shaft.

Commence re-assembly by fitting the end-plate on shaft. If plate bush or oil seal are damaged or worn they should first be renewed. Smear bush and oil seal with grease and sleeve threads with Loctite (grade 270) before fitting end-plate and firmly tightening sleeve on to shaft. Fit the springs on their carrier then check that **ends of both springs protrude 0·13 – 0·26mm (0·005 to 0·010in) over ends of carrier.** If not, remove springs and change the thickness of shims.

Place large thrust washer on to end plate dowels. If the thrust washer dowels are offset the washer can only be fitted the correct way round but on early units the dowels were opposite each other and it is therefore essential that the washer is fitted the correct way round, otherwise the spring carrier slots will not be in the required position and the unit will not operate correctly. Washers with dowel holes opposite each other therefore have an identification groove on one side and **washer must be assembled with the groove side towards the spring.**

Assemble carrier, with springs, thrust washer and collar on shaft. Tap the retaining pin into position then check the end float of the spring carrier, this must not exceed 0 30mm (0·012in) and can be adjusted by changing the thickness of the small thrust washer The collar is also provided with two pin holes which are 0·84mm (0·033in) apart so that using the appropriate hole and selecting a suitable thickness of thrust washer enables the end-float to be reduced to the required limit. When shaft has been assembled check that the collar pin protrudes equally through each side of collar and is free to slide in housing slots; if necessary trim the pin ends with a file.

Thrust washer details:

Part No	Thickness
940039	9 63mm (0·379in)
940040	9 35mm (0 368in)
940041	9 07mm (0 357in)

Hold pinion in housing and smear spindle with grease before fitting it in position Carefully tap a new pin through pinion then replace detent plunger and spring Smear grubscrew threads with Loctite (grade 270) before screwing it into housing and set the screw by turning pinion so that plunger is **out of a detent groove** then tightening screw until it becomes solid and unscrewing it **three-quarters-of-a-turn.** Fit shaft assembly into housing, temporarily without shims, and measure the gap between housing and end-plate Hold end-plate against housing, with hand pressure, so that shaft is pushed 'fully home' and gap is equal all the way round whilst checking gap with a feeler gauge. Remove shaft, fit shims of the same thickness as the measured gap on to end-plate then refit shaft. Place selector lever in vertical position and ensure that rack is central; this can be checked by observing that rack protrudes an equal distance on both sides when viewed from underneath. Tighten end-plate bolts evenly then check that selector lever can be turned into all three positions Coat pinion with grease then smear a new core plug with jointing compound and fit into housing. Pack shaft end with grease then fit a new core plug.

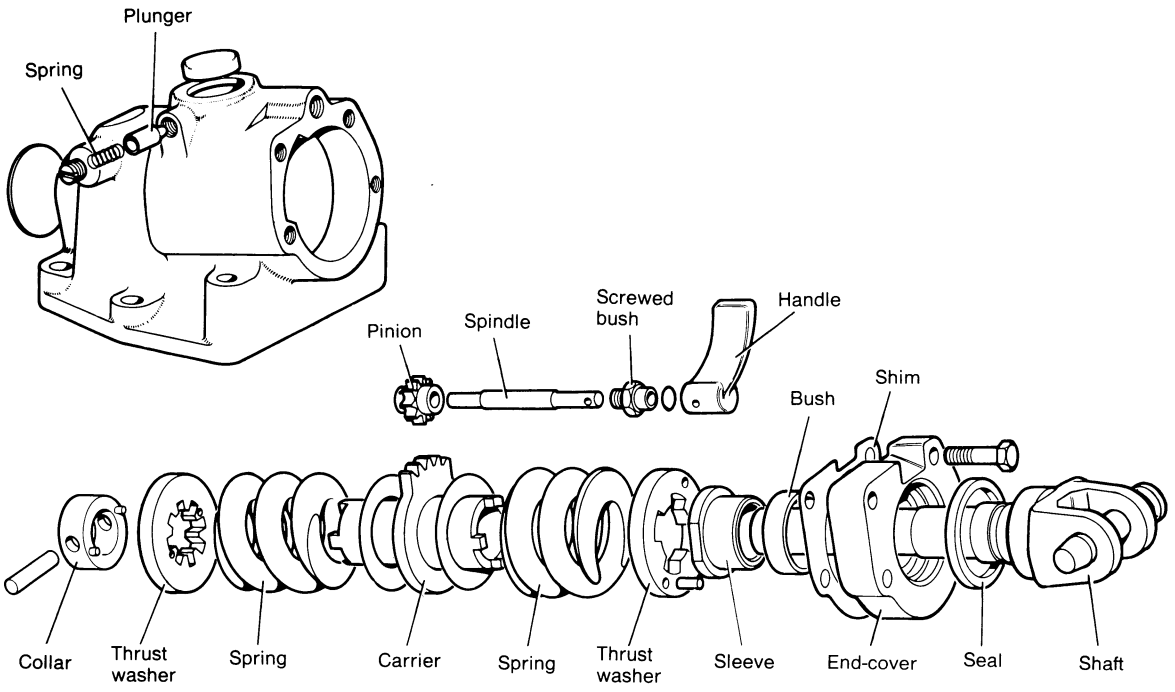

FIGURE 93 COMPONENTS OF SELECTIVE SENSING UNIT

Three-Point Linkage: The fork ends, adjusting screws and gear housing should be lubricated with grease every 60 hours

Pivot Pins: On early 1200 and 1210 tractors the pivot pins attaching the lift rod and levelling lever to the fork ends were retained by a circlip at each end of pin but on later tractors the pins are drilled and secured with spring pins The later type pins (948353) and spring pins (623740) can be used to replace earlier type pins

Lift Rod: This can be dismantled by simply unscrewing the adjusting nut and removing the fork pivot pin, which should be tight in the rod and free in the fork The tube is secured by being peened into the rod groove at three equally-spaced points

Levelling Lever: Dismantle this by unscrewing the adjusting nut then removing the four cover bolts and separating the cover and housing.

Turn the housing over so that the screw and thrust bearing will drop out To remove handle, drive retaining pin out of pinion then drive handle out of pinion with a small punch Smear all parts with grease before re-assembling Pack the housing with grease before fitting the cover and tightening bolts evenly to the correct torque

Hitch Brackets: The lower link hitch brackets must be firmly attached to the axle case. If the brackets are removed ensure that both faces are clean when refitted and the bolts tightened evenly to the correct torque

Bolts on 12 Series tractors are locked with tabwashers but 14 Series tractors have special conical-seat bolts which do not require locking.

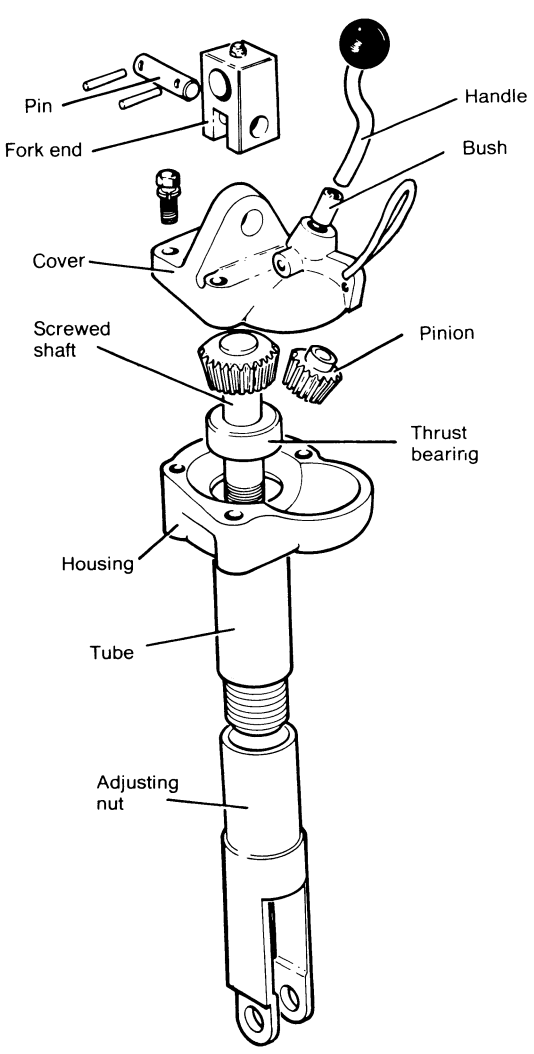

LEVELLING LEVER — 12 SERIES

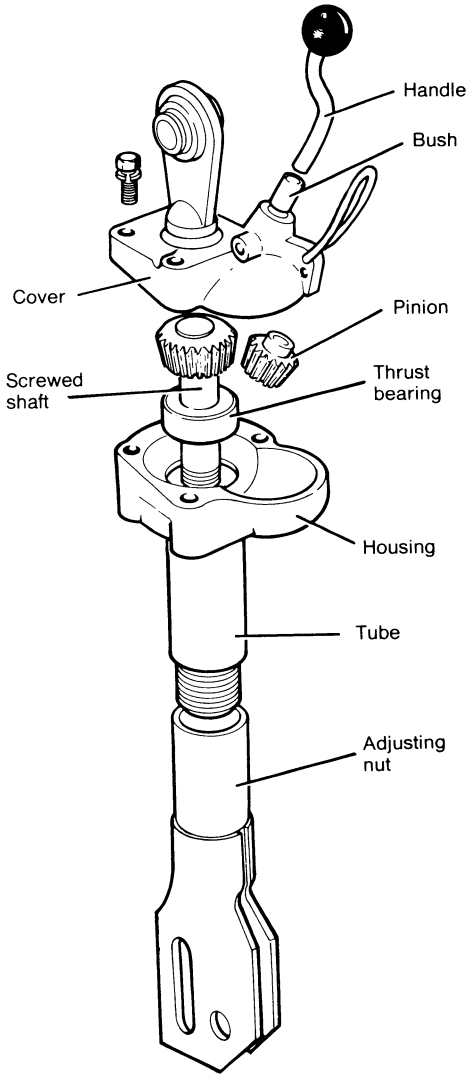

LEVELLING LEVER — 14 SERIES

FIGURE 94 LEVELLING LEVER ASSEMBLIES

Three-Way Take-Off Valve: To dismantle the valve, push the spool into its lowest position with the control lever then remove the control lever Insert a large screwdriver into the cover and lever the spool down until the detent balls are disengaged and the spool protrudes through lower end of body far enough to expose the spool lower 'O' ring the end cap will be pushed out by the spool

Remove 'O' ring from spool then remove the three cover screws and withdraw cover, taking care of the detent balls Push the spool upwards out of the body then remove upper 'O' ring from spool

Assembling the valve. First carefully examine the spool to ensure there are no deep score marks across the lands then check that it is a free sliding fit in valve body Do not attempt to clean a spool with abrasive tape; this would not only destroy the sharp corners on the lands but also reduce the diameter of the spool and increase any oil leakage. If the spool is scored a new matched spool and body is required as the only permissible rectification is lightly lapping the spool into the valve body with metal polish.

Having thoroughly cleaned the body and spool fit a new 'O' ring on upper end of spool then smear spool with clean oil Fit spool into top of body and push it down **only far enough to expose the lower 'O' ring groove** then fit a new lower 'O' ring and push spool up into its working position

Caution — the spool must not now be moved from its working position as this will allow the 'O' rings to be trapped and damaged by the sharp edges of body oil ports.

Fit a new breather pad into body recess then smear a new gasket with grease and place it in position Remove the detent spring grubscrew from cover then fit the first detent spring and ball in position. Hold the body vertically on bench, **so that spool will not be pushed downwards out of body,** then fit the cover, holding detent ball against its spring with a screwdriver inserted through control lever aperture, until ball is engaged over the spool: take care not to allow ball to enter the hole for the control lever

When detent ball is engaged, refit the cover screws then coat control lever pivot ball with grease and replace the control lever. Check that spool operates correctly then fit the second detent ball and spring. Smear grubscrew with Loctite (grade 270), screw it in until it touches the spring then screw it inwards a further $2\frac{1}{4}$ turns

Replace end cap, using a suitable socket, or tube to expand it until tight.

Seal the housing ports with masking tape.

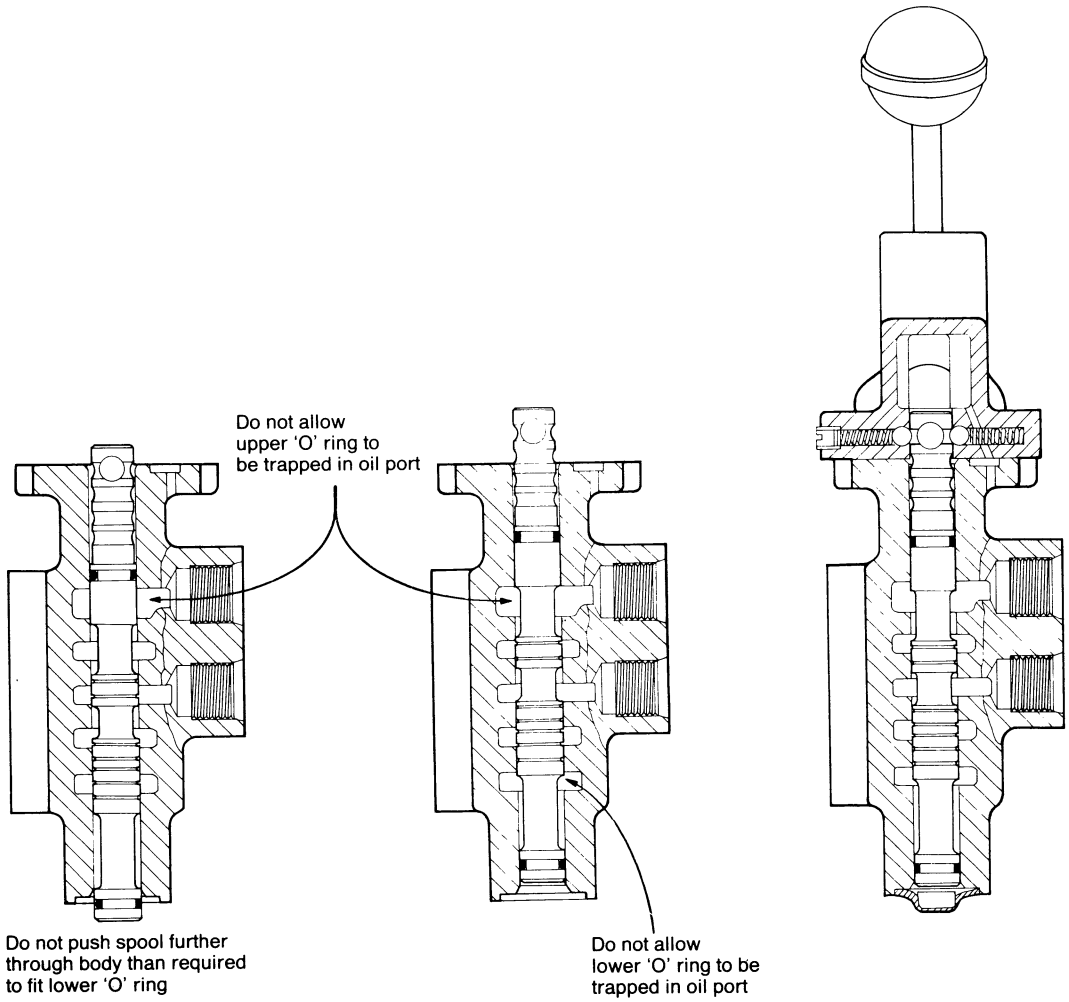

FIGURE 95 ASSEMBLING THREE-WAY VALVE

Double-Acting Line Take-off: It will not normally be necessary to completely dismantle a valve. The spool seals can be replaced without disturbing the pressure kick-out device and the kick-out mechanism can be dismantled without disturbing the spool seals.

Valve spool seals: To replace the spool seals, unscrew the end cap clear of body threads then disconnect spool from control lever spindle On later valves this can be done by removing the spring link but on earlier valves it will be necessary to remove the pin from end of valve spool and whilst doing this it is essential to support the spool end, to avoid any possibility of bending the spool.

Remove any paint or dirt from spool end, so that it will not damage the body bore then grip the end cap and pull spool out of body: end cap will remain attached to spool and hold the detent balls in place.

Carefully remove the 'O' ring and wiper seal from control lever end of spool bore then remove the loose cap from other end and extract the 'O' ring.

Fit new 'O' ring and wiper seal into control lever end of spool bore and smear these with grease. Fit new 'O' ring on to shoulder of the loose cap — this will enable ring to be passed over the sharp corners of spool lands — then slide cap on spool before returning 'O' ring to its correct position at front of cap. Coat spool with **clean** oil then insert it into valve body. Replace connecting link or fit a new pin, supporting spool end as during removal. Screw end cap into body and tighten firmly then check for free operation of spool and detent mechanism.

Resetting Kick-out Mechanism: Unless a test rig is available this should be done with valve mounted on tractor.

Clean area round valve then disconnect pipes from valve and connect a pressure gauge and screw type valve between the two valve ports.

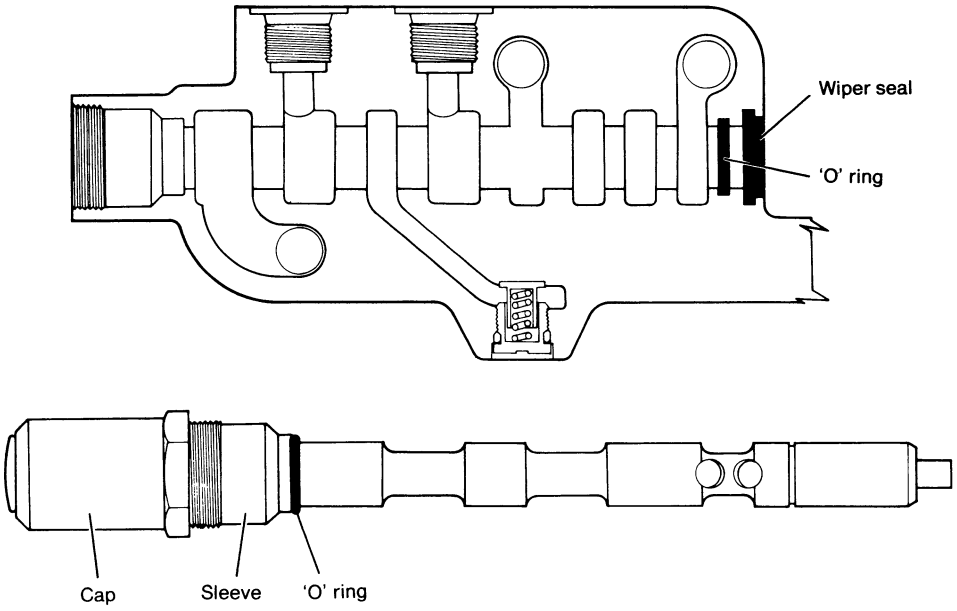

FIGURE 96 FITTING NEW SPOOL SEALS

Start engine and allow oil to reach working temperature then move control lever into detent position. Slowly close the valve and note the rise in pressure. Observe the gauge reading reached before control lever kicks-off and returns to neutral: this should be 1750–2000lb/sq in and if not may be reset as follows -

1. Unscrew cap from body, then jerk operating lever to rear whilst preparing to catch the detent balls Pull cap from spool

2. Unscrew retainer from spool, using a spanner on spool flats to prevent it turning.

   The kick-out shims are fitted at the end of the retainer and if retainer end is flat simply smear a shim with grease, place it on end of retainer, then replace the retainer

   On later type units the end of retainer is recessed for location of spring and on these units the valve spring should be removed, coated with grease and then replaced If a shim is then smeared with grease and fitted in retainer recess the spring will be held central by the grease and will enter recess when retainer is refitted

3 After screwing retainer in position, smear detent balls with grease, hold control lever vertical then push cap over the balls and screw it tight into body.

4. Retest as previously to check that kick-out pressure is satisfactory

Dismantling kick-out mechanism: Unscrew end-cap, then jerk operating lever to rear whilst preparing to catch the detent balls. Pull end-cap off the spool.

Remove circlip, disc and spring from spool then unscrew retainer, whilst holding spool with a spanner on the two flats.

Dismantle retainer by shaking the plunger out then push piston out with a piece of stiff wire Extract any shims, spring and valve from inside the spool then wash all parts

Commence re-assembly by fitting the valve inside the spool: some units have a plunger type valve and others have a steel ball. Coat the valve spring with grease before replacing it in spool If a spring guide was fitted replace this against spring; the grease will hold spring central so that it will enter recess in guide

Replace return spring and washers on retainer then smear shims with grease and fit these on end of retainer, if retainer end is flat — some are recessed — ensure that shims are placed centrally, so that they are clear of threads Screw retainer into spool then replace piston, plunger spring, disc and circlip

Smear detent balls with grease and place these in position, then whilst holding control lever vertical push cap over detent balls and screw it into valve housing

Check that spool moves freely and detent engages correctly

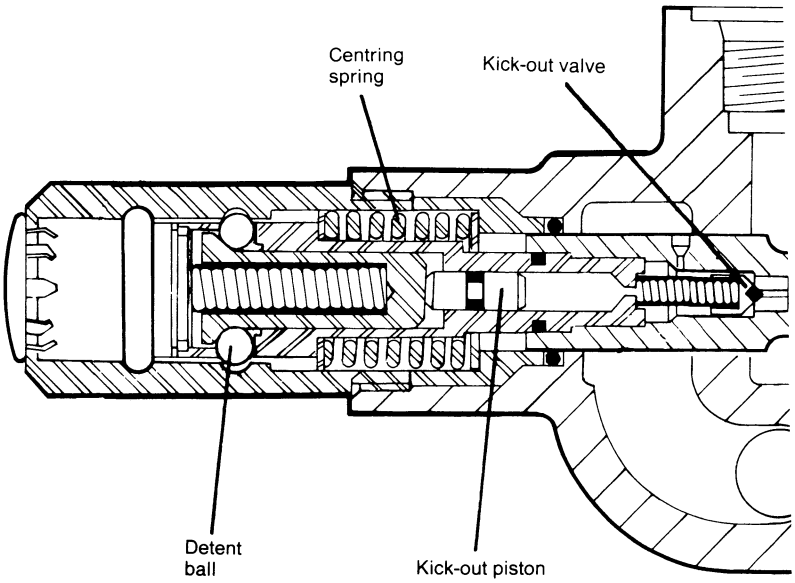

FIGURE 97 AUTOMATIC KICK-OUT MECHANISM

† Filters

Pressure filter	
Element (K952363)	Pall CAF 3968/M
Element filtration	10 micron (nominal)
Suction filters	
Element — 1200 and early 1210 (K920522)	AC Delco 7973324
Element — later 1210, 1212, 1410 and 1412 (K929095)	AC Delco E/OF14910
Element filtration (K920522 and K929095)	40 microns
Element flow — when passing Shell TOU 20W/30 at 40°C and with a maximum pressure drop across element of 27 9mm (1 1in) Hg	
element K952363	45 4litre/min (10gal/min)
element K920522	22 7litre/min (5gal/min)
element K929095	31 8litre/min (7gal/min)
By-pass valve and screen assembly	K920521
By-pass valve opening vacuum	200 – 220mm (7 8 – 8 7in) Hg
Tightening torques	
housing-to-mainframe bolts — $\frac{5}{16}$UNC	2 1kg metre (15lb ft)
cover-to-housing bolts — $\frac{5}{16}$UNC	2 1kg metre (15lb ft)

Hydraulic Pump

Pump type	
1200, 1210 and 1212 { K919048	Plessey A25UT
1200, 1210 and 1212 { K924459	Dowty 7116A/3036
† 1410 and 1412 { K944907	Plessey A33/17268
† 1410 and 1412 { K949605	Plessey A40/18529
All models with tandem pump (K916535)	Plessey A33/25, 07724
Output at 2000 rev/min engine speed and 105 5kg/cm² (1500lb/sq in) at 45°C oil temp	
pumps K919048 and K924459 — 12 Series	21litre/min (4 6gal/min)
pump K944907 — 14 Series	28 3litre/min (6 2gal/min)
† pump K949605	34·2 litre/min (7·5 gal/min)
pump K916535 { front pump	21litre/min (4 6gal/min)
pump K916535 { rear pump	28·3litre/min (6 2gal/min)
Outputs quoted are for new pumps worn pumps are acceptable if output is not less than 90% of a new pump	
Tightening torques	
body through bolts (Plessey) — $\frac{3}{8}$ UNF	6 0kg metres (43 5lb ft)
body through bolts (Dowty) — $\frac{3}{8}$ UNF	4 8kg metres (35lb ft)
drive coupling nut — $\frac{7}{16}$UNF	6 2kg metres (45lb ft)

Pump Relief Valve

Spring free length	40 6mm (1 6in)
Spring rate	37 5kg/cm (210lb/in)
Valve opening pressure	15 5kg/sq cm (2200lb/sq in)
Tightening torques	
valve body to mainframe bolts — $\frac{7}{16}$UNC	6 2kg metres (45lb ft)
valve body to pipe flange bolts — $\frac{3}{8}$ UNC	3 5kg metres (25lb ft)

Pump Bleed Valve

Spring free length	5 6mm (0 221in)
Spring rate	0 75kg/cm (4 24lb/in)
Valve closing pressure	2 25kg/sq cm (32lb/sq in)

Selectamatic Control Valve

Hold relief valve spring free length	18 6mm (0 73in)
Hold relief valve spring rate	21 8kg/cm (122lb/in)
Hold relief valve opening pressure	17 6kg/sq cm (2500lb/sq in)
Latching valve spring free length	19mm (0 75in)
Latching valve spring rate	3 04kg/cm (17lb/in)
Rate of lowering spring free length	35 6mm (1 40in)
Rate of lowering spring rate	2 34kg/cm (13 2lb/in)
TCU spring free length	20 3mm (0 80in)
TCU spring rate	33 0kg/cm (185lb/in)
TCU pressure (maximum)	52 7kg/sq cm (750lb/sq in)
Steel ball diameters	
TCU (K17063)	6 3mm (0 25in)
by-pass plunger (K11548)	3 2mm (0 125in)
hold valve plunger (K11548)	3 2mm (0 125in)
Tightening torques	
valve-to-bracket bolt and nuts — $\frac{5}{16}$UNC	2 1kg metre (15lb ft)
valve-to-pipe connector bolts — $\frac{5}{16}$UNC	2 1kg metre (15lb ft)

Ram Cylinder

Ram cylinder bore — 12 Series (standard)	88 9mm (3 501in)
Ram cylinder bore — 12 Series (oversize)	89 43mm (3 521in)
Ram cylinder bore — 14 Series (standard)	101 63mm (4 001in)
Piston stroke — 12 Series	139mm ($5\frac{31}{64}$in)
Piston stroke — 14 Series	168mm ($6\frac{39}{64}$in)
Piston diameter — 12 Series (standard)	88 87mm (3 499in)
Piston diameter — 12 Series (oversize)	89 38mm (3 519in)
Piston diameter — 14 Series (standard)	101 50mm (3 996in)
Tightening torques — 1200 Series	
ram cylinder cover bolts — $\frac{1}{2}$ UNC	9 0kg metre (65lb ft)
ram cylinder-to-axle bolts — $\frac{5}{8}$ UNC	19 4kg metre (140lb ft)
ram cylinder-to-axle bolts — $\frac{1}{2}$ UNC	10 4kg metre (75lb ft)
ram cylinder bleed valve — $\frac{1}{8}$ BSP	1 1kg metre (8lb ft)
Tightening torques — 14 Series:	
ram cylinder cover bolts — $\frac{3}{8}$ UNC	3 5kg metre (25lb ft)
ram cylinder cover bolts — $\frac{5}{8}$ UNC	16 6kg metre (120lb ft)

Linkage Support Ram

Ram rod diameter	44 45mm (1 750in)
Ram stroke	27 9cm (11in)
Ram sleeve diameter	63 58mm (2 503in)
Ram sleeve bore	44 50mm (1 752in)

Sensing Unit (Single Rate)

Spring free length	108mm (4 25in)
Spring rate	1930kg/cm (10,800lb/in)
Operating force — maximum	
compression	1500kg (3300lb)
tension	625kg (1350lb)

Sensing Unit (Adjustable)

Spring free length	108mm (4 25in)
Spring rate	1930kg/cm (10,800lb/in)
Operating force — maximum	
extra light draught (compression)	715kg (1575lb)
extra light draught (tension)	429kg (945lb)
light draught (compressed)	975kg (2150lb)
light draught (tension)	585kg (1290lb)
medium draught (compression)	1760kg (3880lb)
medium draught (tension)	1057kg (2330lb)
heavy draught (compression)	2644kg (5830lb)
heavy draught (tension)	1587kg (3500lb)

Sensing Unit (Selective)

Spring free length heavy	70 64mm (2 781in)
Spring rate spring	3750kg/cm (21,000lb/in)
Spring free length light	56 36mm (2 219in)
Spring rate spring	1930kg/cm (10,800lb/in)
Operating force — maximum	
light draught (compression)	907kg (2000lb)
light draught (tension)	478kg (1100lb)
medium draught (compression)	1360kg (3000lb)
medium draught (tension)	725kg (1600lb)
heavy draught (compression)	2721kg (6000lb)
heavy draught (tension)	1496kg (3300lb)
Tightening torques	
end plate-to-housing bolts — $\frac{3}{8}$ UNC	4 2kg metre (30lb ft)
housing-to-PTO unit bolts — $\frac{1}{2}$ UNC	10 5kg metre (75lb ft)

Three-point Linkage

Levelling lever lengths	
maximum } 12 Series	570mm (22½in)
minimum } 12 Series	454mm (17⅞in)
maximum } 14 Series	667mm (26¼in)
minimum } 14 Series	524mm (20⅝in)
Lift rod lengths	
maximum } 12 Series	584mm (23in)
minimum } 12 Series	457mm (18in)
maximum } 14 Series	654mm (25¾in)
minimum } 14 Series	527mm (20¾in)
Tightening torques	
levelling lever gear housing bolts — 7/16UNC	4 2kg metre (30lb ft)
hitch brackets-to-axle case bolts — ¾UNF (12 Series)	19 4kg metre (140lb ft)
hitch brackets-to-axle case nuts — ¾UNF (14 Series)	30kg metres (220lb ft)

† **Stabiliser Bars**

Free movement in telescopic bar	75mm (3in)
Tightening torque	
bracket to reduction case	9kgm (65lb ft)
nuts on pins	19kgm (140lb ft)

Three-way Take-off Valve

Take-off pipe connections	¾ UNF
Tightening torque — valve body bolts — ⅜ UNC	3 5kg metre (25lb ft)

Double Acting Live Take-off Valve

Take-off pipe connections	¾ UNF
Kick-out operating pressure	158kg/sq cm (2250lb/sq in)
Tightening torque-valve body bolts — ⅜ UNC	3 5kg metre (25lb ft)

SUMMARY OF DESIGN CHANGES

Details of change	When introduced
Top link adjustment increased from 58 4 to 73 7cm (23in to 29in) Part number of top link assembly changed from K962274	1200/703305 (November 1967)
Filtration changed from a paper element by-pass filter mounted on top of rear axle case to a full-flow paper element filter in base of main frame Filter warning lamp fitted on instrument panel	1200/705359 (April 1968)
Ramshaft bracket K913756 with a $\frac{9}{16}$UNF plug in place of core plug (K24711), to prevent over-selection of dial pointer mechanism into TCU/EXT position	1200/705051 (March 1968)
Check chain anchor bracket setscrews K603042 changed to K603039. Both setscrews are $\frac{7}{16}$UNC but K603039 has a larger head ($\frac{5}{8}$in AF) to give an improved conical seat	1200/705864 (June 1968)
Check chain anchorage changed from PTO case to top of drawbar frame Check chains strengthened and fitted with an adjustable link	1200/706230 (September 1968)
Oil filter housing K922612 changed to housing K924377, which is connected to pump inlet pipe by an adaptor hose K924378	1200/706430 (October 1968)
Ram cylinder bolts (K601280) fitted with hardened steel washers, K626874 to ensure that initial bolt tightening torque is maintained Fitting of bonded sealing washers (K623515) discontinued	1200/706984 (October 1968)
Double-acting take-off valve control lever fitted with key (K622382), to ensure more positive clamping of lever on to shaft	1200/709554 (August 1969)
Sensing unit shaft (K919726) changed to include machined boss at clevis end, and thus dispense with separate distance piece (K915260) Part number of shaft unchanged	1200/709539 (August 1969)
Dowty hydraulic pump, K924459, fitted as alternative to Plessey pump K919048 Complete pump assemblies are fully interchangeable	1200/709727 (August 1969)
Automatic air bleed valve, K928525, fitted in pump outlet pipe Relief valve assembly changed from K919417 to K928524, because valve body incorporates drilling for bleed valve return port	1200/715383 (November 1970)
Lift rod and levelling lever attachment to fork end changed from a plain pivot pin, K921913 to a shouldered pin (K928907) retained by a spring pin (K623740)	1200/716216 (February 1971)
Magnetic filter, K904390, fitted inside the filter by-pass valve, K920521, to arrest any particles which by-pass the paper element when valve is open	1200/716763 (March 1971)
Lift rod and levelling lever attachment to fork ends changed from shouldered pin (K928907) to a grooved pin (K940000) retained by circlips (K11797)	1200/718145 (October 1971)
Plessey hydraulic pump, K919048, re-installed and fitting of Dowty pump K924459, discontinued	1200/718871 1212/1000153 (May 1972)
By-pass plunger in control valve changed. Nylon filter and restrictor washer with 0 56mm (0 022in) dia hole deleted and 1 8mm (0 069in) dia. washer fitted with self-centring metering pin.	1210/721271 1212/1000675 (September 1972)
Levelling lever and lift rod changed to include friction-welded components Part number of levelling lever changed from K929333 to K940507 and lift rod from K921917 to K940506	1210/722122 1212/1001081 (March 1973)
Double acting take-off valve control levers changed from forgings to fabricated construction Method of attaching levers to valve spindle changed from clamp bolt to locating screw	(November 1973)
Selective sensing unit thrust washer dowels offset so that washer cannot be assembled incorrectly New end plate K947300 and thrust washers must be used together	1212/1002353 (February 1974)
Check chain attachment to lower links changed from integral pins to separate pivot pins K946108 Part number of chain assembly changed from K929720 to K946107	1210/724659 1212/1002487 (February 1974)
Lift rod and levelling lever attachment to fork end changed from grooved pivot pin K940000 secured with circlips, to a drilled pin K948353 secured with spring pins K623740	1210/725855 1212/1002822 (July 1974)
By-pass plunger in control valve change so that it rotates in service flutes angled and spring retainer fitted with a steel ball in its centre Metering pin deleted and original orifice washer with nylon filter refitted	1210/725191 1212/1002647 (November 1974)

Details of change	When introduced
Check chain anchorage changed from top of drawbar frame to bridge piece between drawbar hitch plates Part number of check chains, K946107, unchanged	1210/729236 1212/1004112 1412/1050155 (August 1975)
Higher capacity filtration system, as previously fitted to 1212 tractors, fitted to 1210 tractors Also rear main frame on 1210 tractors now similar to 1210 tractors and approved lubricants revised	1210/728409 (August 1975)
Hydraulic pump support bracket of increased length fitted to accommodate front extension, also larger recess in driveshaft and changes to hydraulic pipes.	1210/730832 1212/1004792 (November 1975)
Revised control mechanism adjustment procedures issued for tractors with Q cabs	(September 1976)
Externally-mounted pressure filter fitted and suction filter assembly replaced by suction screen Main frame ramshaft bracket and hydraulic piping altered, filter warning light deleted and relief valves relocated	1210/1115276 1212/1115276 1410/11200753 1412/11200753 (September 1976)
Flexible pipe K949987 replaces steel pipe K947510 used with single pump Spring clip added to oil cooler selector valve to retain plunger in extended (not in use) position.	1412/11200638 (pipe) 1412/1051059 (clip) (October 1976)
Torque settings for hitch bracket to rear axle studs reduced to 9 7 kg/m (70 lb ft), stud threads treated with Loctite 270 and nut torque loading increased to 30 kg m (220 lb ft)	1410-12/11200638 (October 1976)
Lower link/hitch bracket pivot pins replaced by bolts and nuts Also lug welded on bracket to prevent bolt rotation.	1210-12/11152944 1410-12/200991 (October 1976)
Lowering stop pin on Q cab hydraulic control friction plate K950555 moved 3·18 mm ($\frac{1}{8}$") to rear to provide increased lowering on height control.	1210-12/11153599 1410-12/11201289
Quantity of Belleville washer K626740 increased from 1 to 2 on friction lever shaft, Q cab models Depth of recess in friction plate K950864 increased to 3·18 mm ($\frac{1}{8}$") to locate additional Belleville washer	(January 1977)
† Anti extrusion rings K628060 are now fitted on dump valve plunger and guide bush This will prevent leakage	1210-12/11154968 (April 1977)
† Single hydraulic pump K949605 replaces single hydraulic pump K944907 The output of the pump is now 34·2 litre/min (7·5 gal/min) at 105·5 kg/cm² (1500lb/in²) and 2000 rev/min.	1410-12/11202433 (July 1977)
† Anti extrusion ring K628915 is now used with 'O' ring K628866 on pressure line filter K946095 This will prevent leakage.	1210-12/11157412 1410-12/11202961 (October 1977)
† Telescopic stabiliser bars can now be fitted	(November 1977)

HYDRAULIC SYSTEM

(885, 990, 995 AND 996 SYNCHROMESH TRACTORS)

CASE CORPORATION

Pub 9-37214

PRINTED IN U.S.A

⚠ DANGER — Hydraulic equipment can be dangerous. ⚠

Not only can equipment move unexpectedly but oil can, when released under pressure, pierce the skin to cause serious injuries.

FOR YOUR SAFETY

Before commencing work on a machine ensure all pressure has been relieved from the hydraulic system and the equipment is resting in a fully-lowered position. After lowering the equipment to the ground or against its fully-lowered stop, allow the engine to come to rest and then operate the control valves to relieve all oil pressure. If any equipment cannot be lowered, because for example it would interfere with access, do not support it hydraulically but use a correct support so that when all system pressure is released the equipment is safely supported.

Do not work under an implement whilst it is raised on the tractor linkage and supported only by the locking latch. Always place a support under the rear of the implement, so that it cannot drop if a mechanical failure occurs.

Never check for oil leaks with the hands and do not approach very close to a pipe, or component, suspected of leaking.

The most dangerous type of oil leak is a leak so small as to be almost invisible. A very fine jet of oil under a pressure far less than is used in tractor hydraulic systems can penetrate the skin, even through clothing, and cause PERMANENT tissue damage.

An oil injection through the skin is relatively painless and may not be noticed at the time. It may later become painful however and give the impression of a cut which has become infected. If this occurs obtain medical attention immediately. The damaged tissues must be removed without delay otherwise the affected area will spread and major surgery may be required to prevent it becoming fatal.

Painful burns can be caused by only a small amount of hot oil coming into contact with the skin.

CONTENTS

How it works Page

Hydraulic system 5
Hydraulic pump 6
Full flow filter 7
Pump relief valve 8
Selectamatic control valve 8
Dump valve 13
Selector dial pointer mechanism 14
Traction control (TCU) 15
Ram cylinder 16
Linkage support ram 16
Sensing unit 17
Three-point linkage 19
Three-way take-off valve. 20
Double-acting live take-off valve 21

Fault finding

Tools required 23
Fault Finding Sequence 24
Lift test 25
Hold test 26
Lowering test 26
TCU test 26
Height control test 26
Depth control test 26

Adjustments

Abutment plate 27
TCU valve screw. 27
Ramshaft cam 28
Control lever connecting link 28
Bleeding the System 28
Quadrant spring carrier 29
Sensing unit cable 29
'Q' Cab control adjustments 30

Unit removal and replacement

Filters 33
Hydraulic pump 34
Pump relief valve 34
Dump valve 35
Sensing unit 35
Three-way take-off valve. 35
Linkage support ram 36
Double-acting live take-off valve 36
Ramshaft 37
Ram cylinder 38
Selectamatic control valve 39
Selector dial pointer mechanism 39

Page

Unit maintenance and repair

Recommended lubricants 41
Full flow filter 42
Hydraulic pump (Plessey) 42
Hydraulic pump (Dowty) 44
Selectamatic control valve 46
Dump valve 49
Selector dial pointer mechanism 50
Ram cylinder 51
Locking latch 51
Ramshaft arm 52
Three-point linkage 52
Linkage support ram 53
Sensing units 54
Three-way take-off valve. 56
Double-acting live take-off valve 57

Specifications and data

Full flow filter 60
Hydraulic pump 60
Pump relief valve 60
Selectamatic control valve 60
Ram cylinder 61
Linkage support ram 61
Sensing unit 61
Three-point linkage 61
Three-way take-off valve 61
Double-acting live take-off valve 61

Summary of design changes 62

David Brown policy is one of continuous development and improvement and therefore the specification details may have been altered since this manual went to press.

Moreover, as the David Brown tractor is offered in a variety of forms to cover a large number of markets and applications, this manual may contain details of items not applicable to the particular tractor with which it is being used.

Hydraulic System: Mounted between the rear axle and power take-off unit the hydraulic pump is driven from the PTO input shaft and is, therefore, in operation whenever the PTO clutch is engaged.

The pump draws oil through the full-flow filter in the main frame reservoir and pumps it, through pipework, to the distribution block mounted on top of the rear axle case. From the distribution block oil flows to the Selectamatic® control valve and also to any live take-off valves mounted on top of the distribution block.

When the take-off valve is in neutral (hold) position, or if no take-off valve is fitted, a continuous flow of oil is supplied to the Selectamatic valve and when the tractor control lever is in the 'Raise' position oil is directed into the ram cylinder to raise the linkage, or supply oil to an attachment connected to the three-way take-off valve.

Moving the tractor control lever into either the 'Hold' or 'Lower' position diverts pump output into the low pressure pipes, which directs it into the transmission and PTO for lubrication purposes.

When a live take-off valve is moved from its neutral (central) position pump output is diverted from the Selectamatic valve and to the equipment connected to the take-off valve.

The tractor internal hydraulic system is therefore, inoperative whenever a live take-off valve is being used to operate an attachment.

If a three-way take-off valve is fitted, this is bolted to the ram cylinder so that oil flow can be diverted from the tractor ram cylinder and to an external attachment. The tractor control lever can then be used to control external equipment instead of the tractor linkage.

To prevent excessive load being placed on the system a pressure relief valve is connected into the pipe between pump and distribution block. When excessive pressure occurs in the system the valve opens and returns surplus oil into the main frame reservoir.

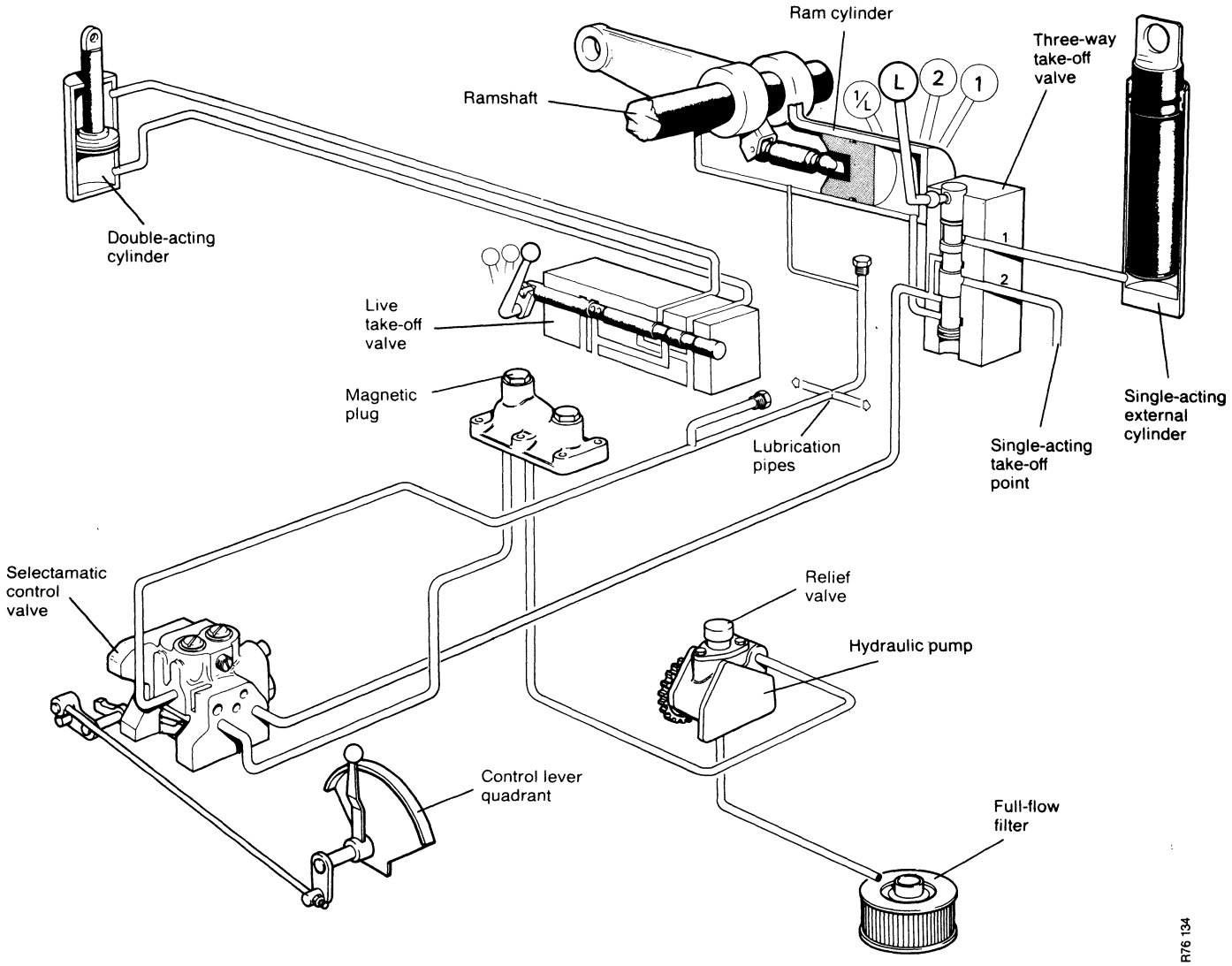

FIGURE 1 DIAGRAM OF HYDRAULIC SYSTEM WITH SINGLE HYDRAULIC PUMP

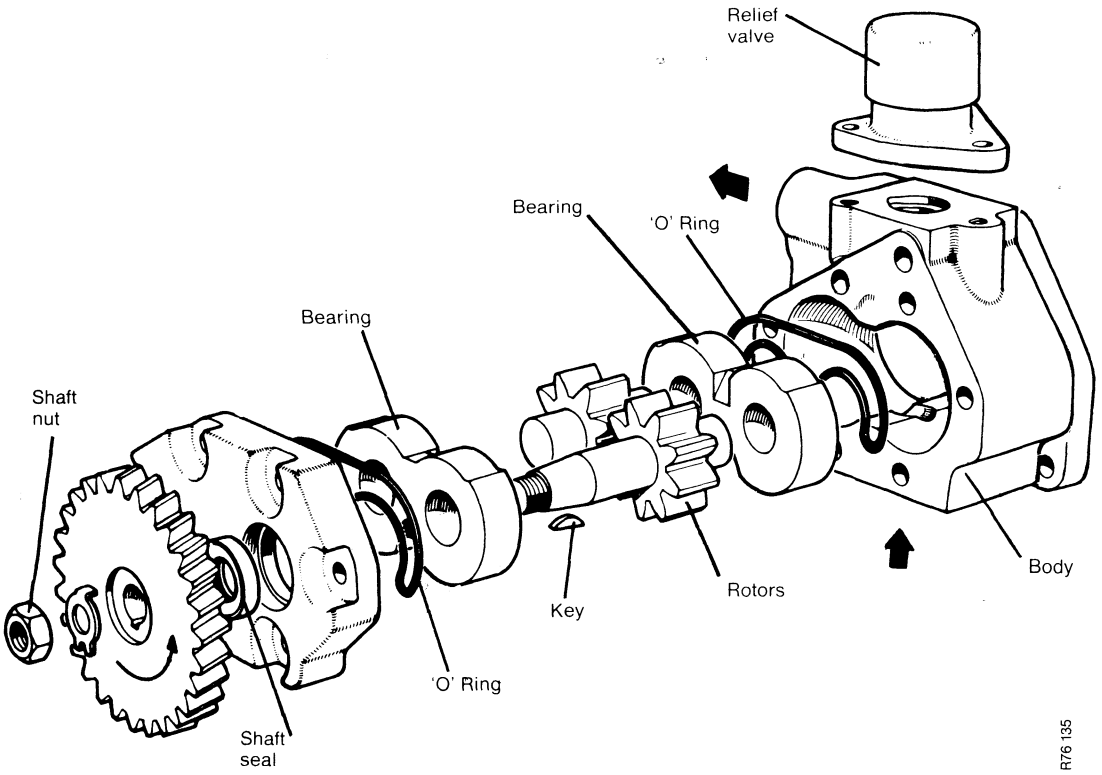

FIGURE 2 HYDRAULIC PUMP (PLESSEY)

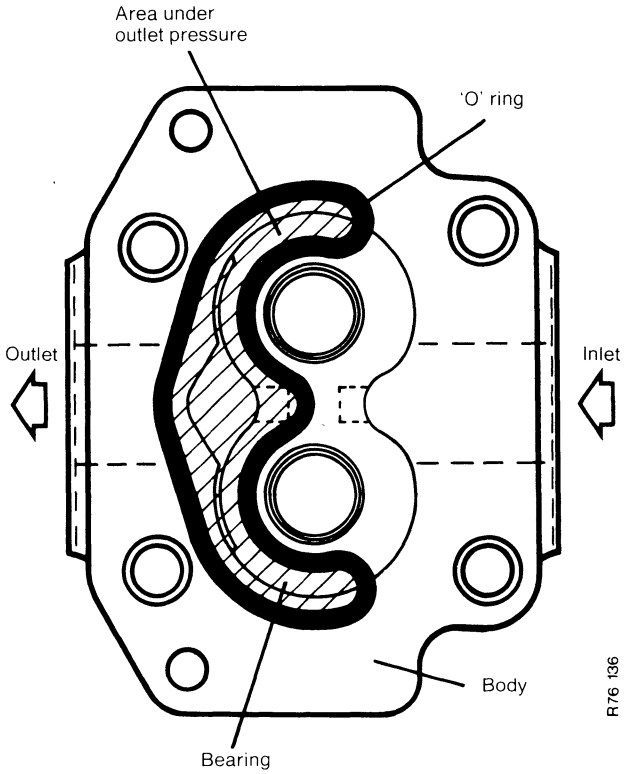

FIGURE 3
PRESSURE BALANCING
OF PUMP BEARINGS

Hydraulic Pump: The two gear-shaped rotors are meshed together and rotate inside a close-fitting housing. As the rotors turn, the spaces between adjacent gear teeth transfer oil from the inlet to the outlet side of pump — there being no open tooth cavity at point of mesh. The rotors are supported in bearings which not only provide support for the rotor shafts but also seal the side faces of the rotors against oil leakage. Pump efficiency depends on a good seal being maintained between the rotor side faces and bearings. The bearings are, therefore, pressure balanced by feeding pump output pressure into the cavities between the bearings and pump body. The cavities are sealed by 'O' rings and positioned towards outlet side of bearings. When pump output pressure rises, the pressure in bearing cavities also rises so that the tendency of the output pressure to push the bearings apart is balanced by the pressure in the cavities pushing the bearings against the rotor side faces. Oil leakage between the rotor side faces and bearings is thus reduced to a minimum.

Note: Some early tractors have a Dowty hydraulic pump fitted. Later models have a Plessey pump. The description applies generally to both types – detail differences are noted in Unit Maintenance and Repair Section.

Full-flow Filter: This is attached on underside of main frame and consists of a paper element filter, a fine screen filter, valve and magnetic filter.

Transmission oil from the main frame reservoir passes through the paper element, where particles down to 40 microns are removed When the filter element becomes choked the restriction to the flow of oil through the element causes a depression, or partial vacuum, on pump side of filter. When this depression reaches 0·28 kg/sq cm (4 lb/sq in) the spring-loaded valve inside screen filter is drawn from its seat and allows oil to by-pass the paper element, by flowing through the screen filter and past the magnetic filter The pump is thus not starved of oil but fed with oil that has not been filtered through the paper element

As it is not desirable for oil to enter the hydraulic system without first passing through the paper element a vacuum switch, which also operates at 0·28 kg/sq cm (4 lb/sq in), is connected to the pump side of the filter When the depression in filter is sufficient to open the by-pass valve it, therefore, also closes the switch contacts and lights the warning lamp on instrument panel, to give a visual warning to the operator that the filter element is being by-passed.

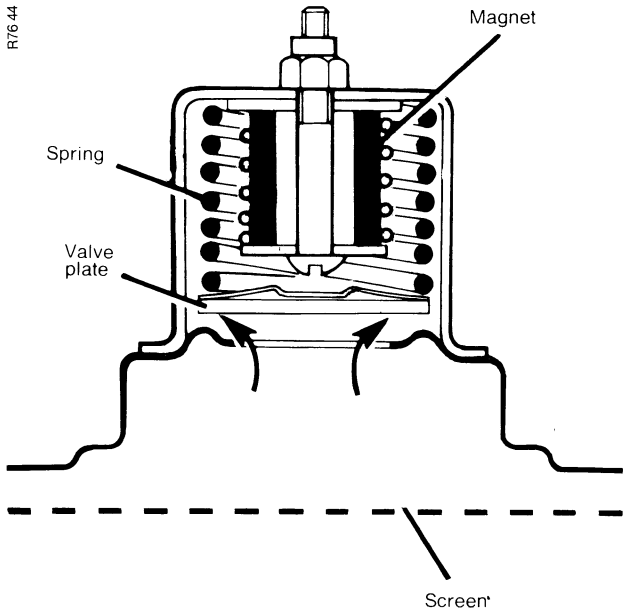

FIGURE 4 FILTER BY-PASS VALVE

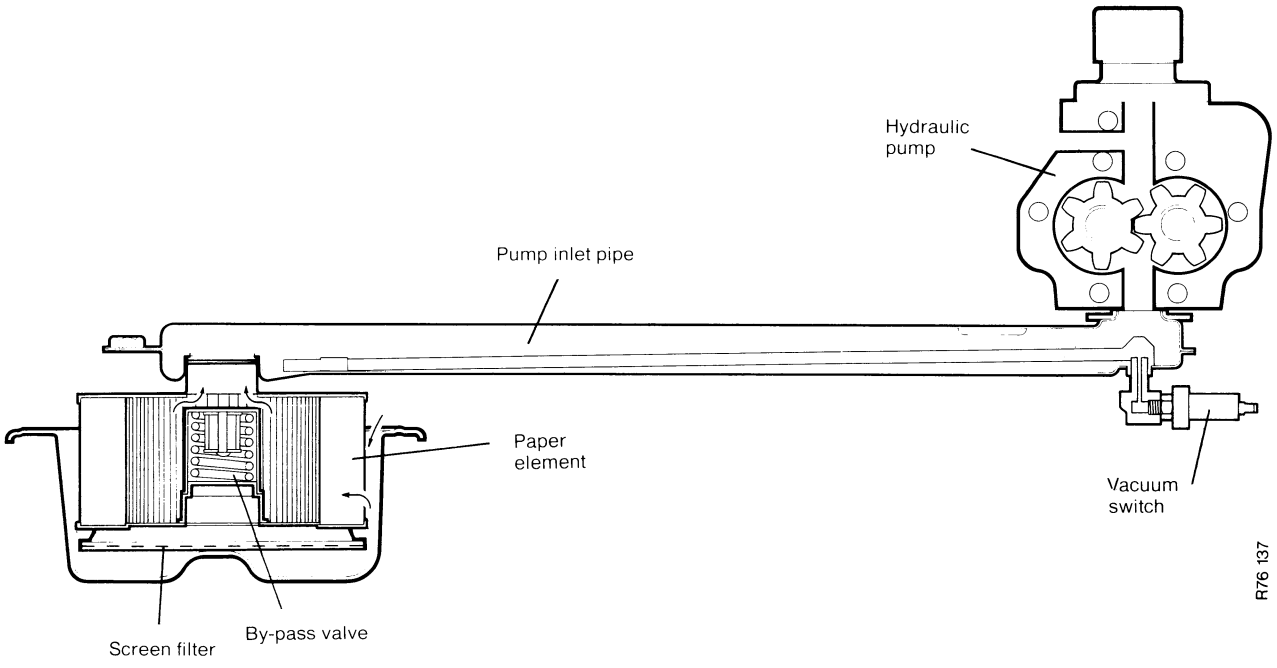

FIGURE 5 FULL-FLOW FILTER

Pump Relief Valve: Located on pump body, the relief valve prevents damage to the pump by limiting pump output pressure to a safe figure.

The small plunger is held firmly against the valve seat by the cap and spring. When oil pressure inside system is sufficient to overcome spring tension, the plunger is pushed off its seat and allows oil to escape into reservoir. When system pressure falls the spring returns the plunger to its seat and cuts off the oil flow to reservoir.

As the actual oil pressure required to unseat the valve plunger depends on the spring pressure, shims are fitted between cap and spring to adjust the valve operating pressure to the required setting.

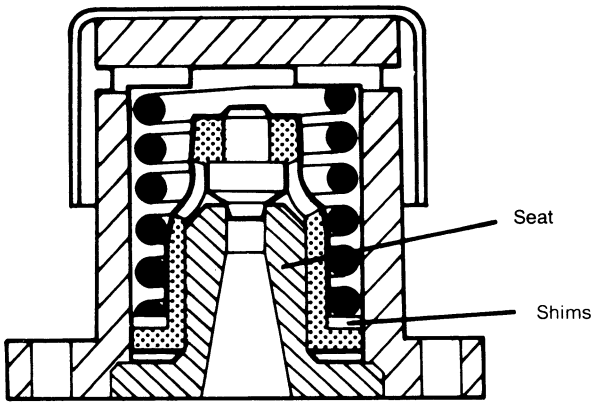

Valve closed

R76 138

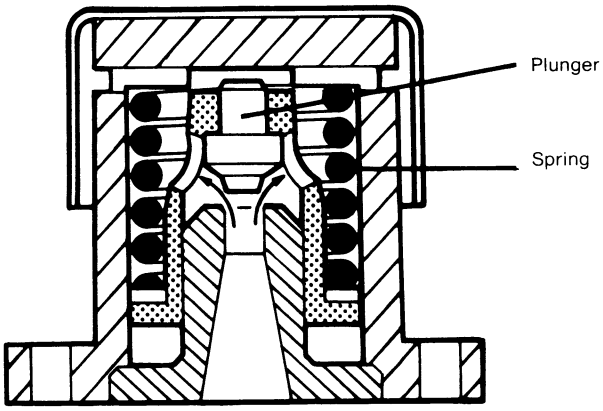

Valve open

FIGURE 6 PUMP RELIEF VALVE

Selectamatic Control Valve: This is housed inside the right-hand side of the rear axle case and consists of a body containing eight valves. (see page 12)

By-pass Valve Plunger is held closed by a light spring and has a small hole through its centre to enable oil to pass through plunger and, when upper chamber is sealed, build up equal pressure above and below plunger.

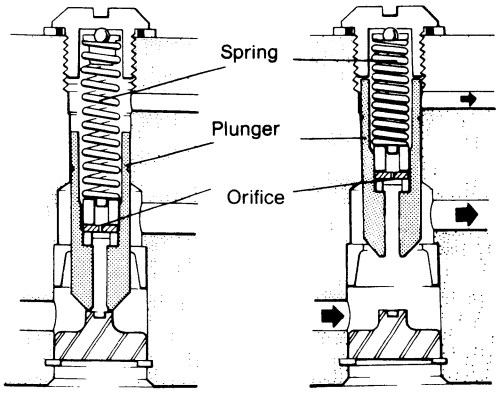

Valve Closed Valve open

R76 50

FIGURE 7 BY-PASS VALVE

Hold valve plunger is also held against its seat by a light spring and has a hole through its centre incorporating a simple non-return valve, so that oil can flow upwards into chamber at top of plunger but cannot flow in reverse direction.

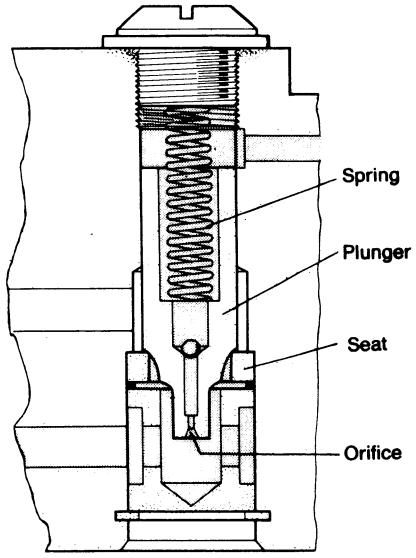

R76 52

FIGURE 8 HOLD VALVE

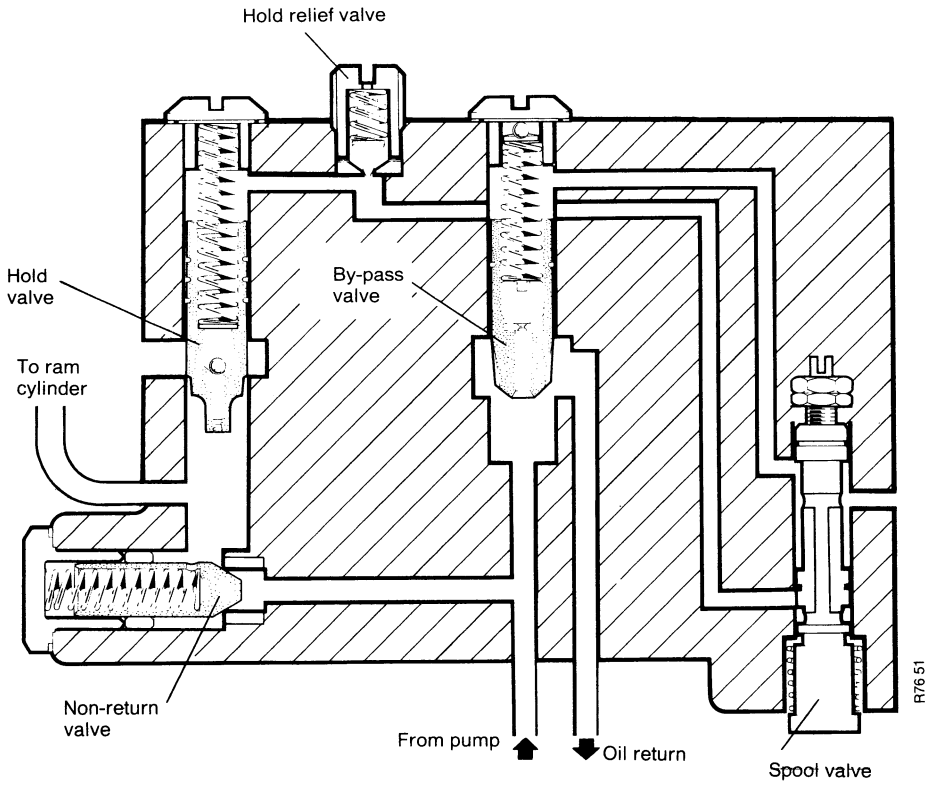

FIGURE 9 SPOOL VALVE

Spool Valve Plunger is spring-loaded so that when it is released, ports to both by-pass and hold valves are closed. Both valve plungers are therefore held on their seats by their springs and pump output flows into ram cylinder to raise linkage.

When spool valve plunger is held in mid-position, port from hold valve remains closed, therefore hold valve remains seated, but port from by-pass valve is opened. Oil from top of by-pass plunger then drains to reservoir and as oil cannot flow through plunger orifice fast enough to maintain an equal pressure at top of plunger, oil pressure below plunger pushes against the light spring to lift plunger off its seat. Pump output then flows out of by-pass port and returns to reservoir: the linkage being held stationary by the oil trapped in the ram cylinder due to the hold valve plunger remaining on its seat.

When spool valve plunger is pushed upwards ports from both by-pass and hold valve plunger are opened. Oil above plungers then flows to reservoir and pressure below plungers pushes them off their seats. Pump output then flows through by-pass port and oil from ram cylinders flows out through hold valve to lower the linkage.

Non-return Valve is situated between by-pass and hold valve ports It allows pump output to flow into system when by-pass plunger is on its seat, but prevents oil returning, and thus maintains linkage in raised position when hold valve is seated

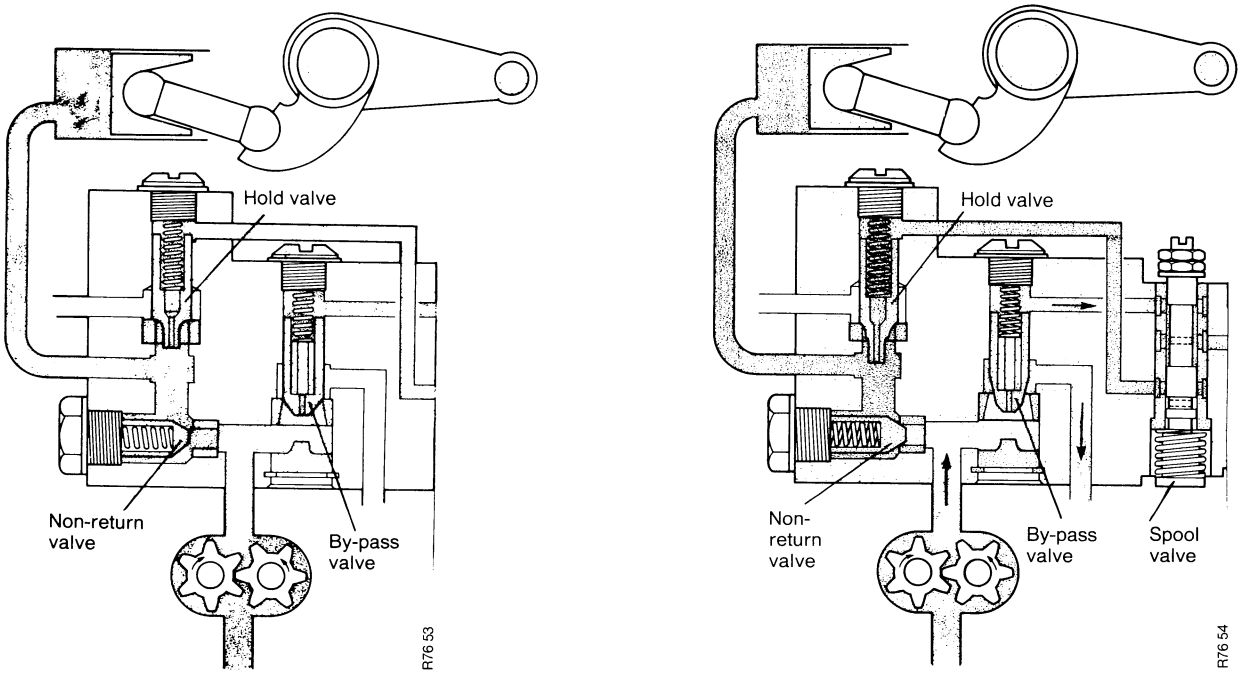

Linkage being raised — Valve open

Linkage held stationary — Valve closed

FIGURE 10 NON-RETURN VALVE

TCU Valve enables a regulated degree of back pressure to be built up in oil passing out of spool valve ports The same amount of back pressure then builds up on the top of by-pass and hold valve plungers, which causes the plungers to move towards their seats until an equal amount of back pressure builds up below the plungers The resulting rise of pressure below plungers is also transmitted to the ram cylinder which gives a partial lifting effort to the linkage for weight transference (traction control) purposes

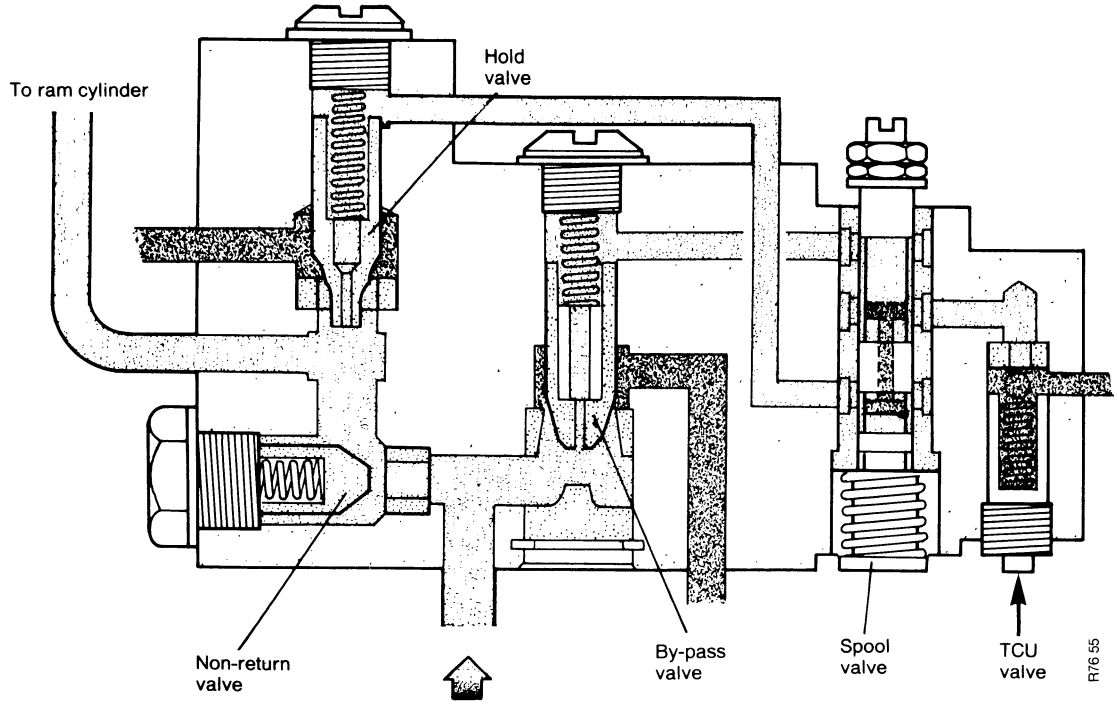

FIGURE 11 TCU VALVE

Pressure Relief Valve is connected to the chamber at top of hold valve plunger so that if oil pressure in system rises excessively, as would occur if tractor is driven over rough ground at high speed with a heavy implement supported on linkage, relief valve will be pushed open The higher pressure below plunger will then push plunger off its seat and allow oil to escape from system until pressure is reduced to a safe figure.

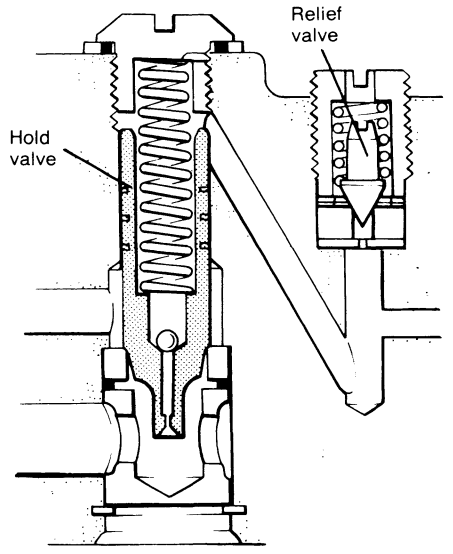

Relief valve — closed

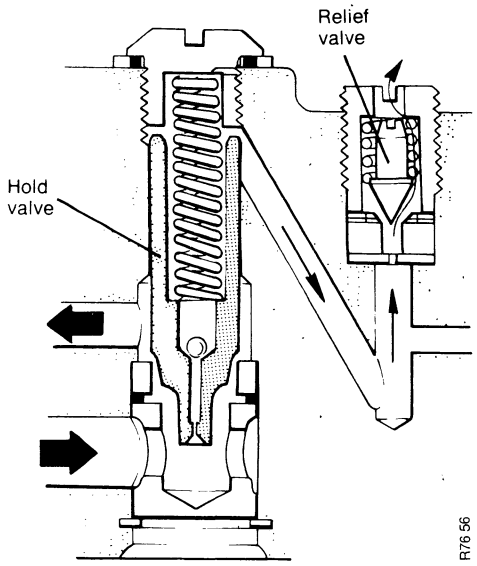

Relief valve — open

FIGURE 12
HOLD PRESSURE RELIEF VALVE

Latching Valve is in the circuit between chamber at top of by-pass valve and spool valve and the purpose of this valve is to make the by-pass valve plunger very sensitive to small movements of spool valve plunger If spool valve is only moved by a small amount the latching valve is then closed by the small amount of back pressure and causes by-pass plunger to be pushed quickly on to its seat. This avoids the possibility of the by-pass plunger reaching a balanced condition with the oil pressure above being insufficient to push plunger fully on to its seat and placing the pump under an unnecessary load.

The latching valve therefore gives the by-pass valve quick response to small spool valve movement: as this rapid response is not required when using TCU (weight transference) a drilling from the TCU valve allows pressure to be applied on the spring side of the latching valve. Closing the TCU valve does not therefore operate the latching valve as equal pressure is applied to both sides, enabling the spring to hold the valve in the full open position

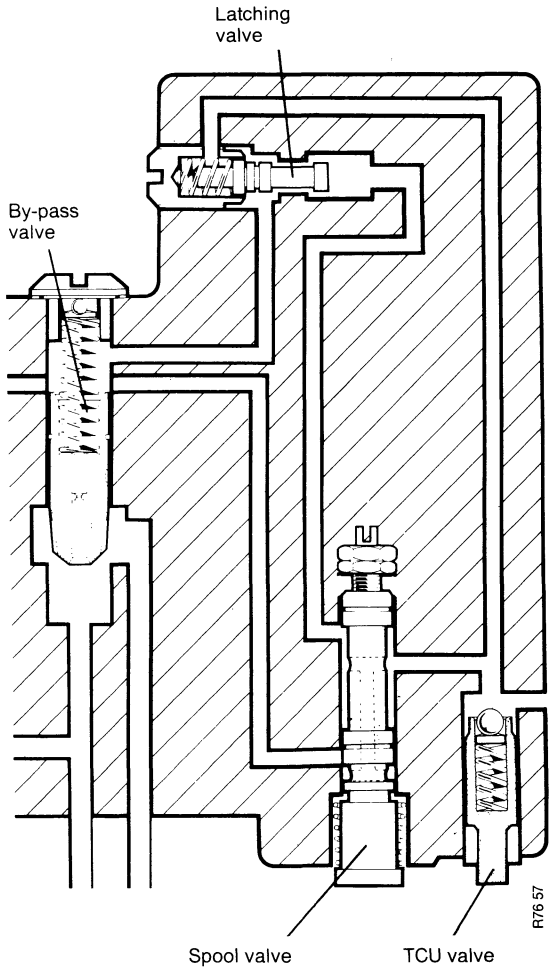

FIGURE 13 LATCHING VALVE

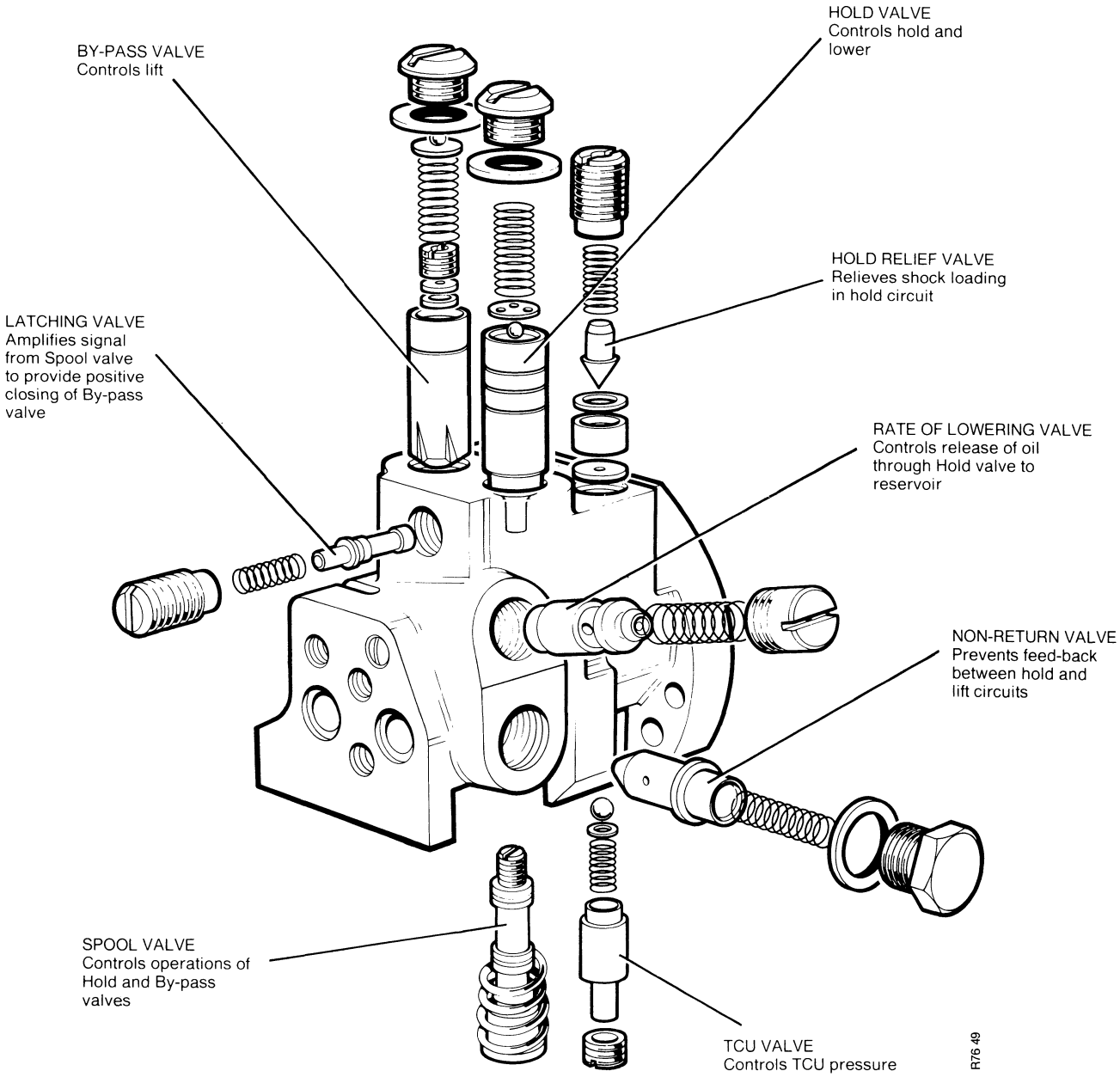

FIGURE 14 BASIC FUNCTION OF VALVES IN SELECTAMATIC VALVE ASSEMBLY

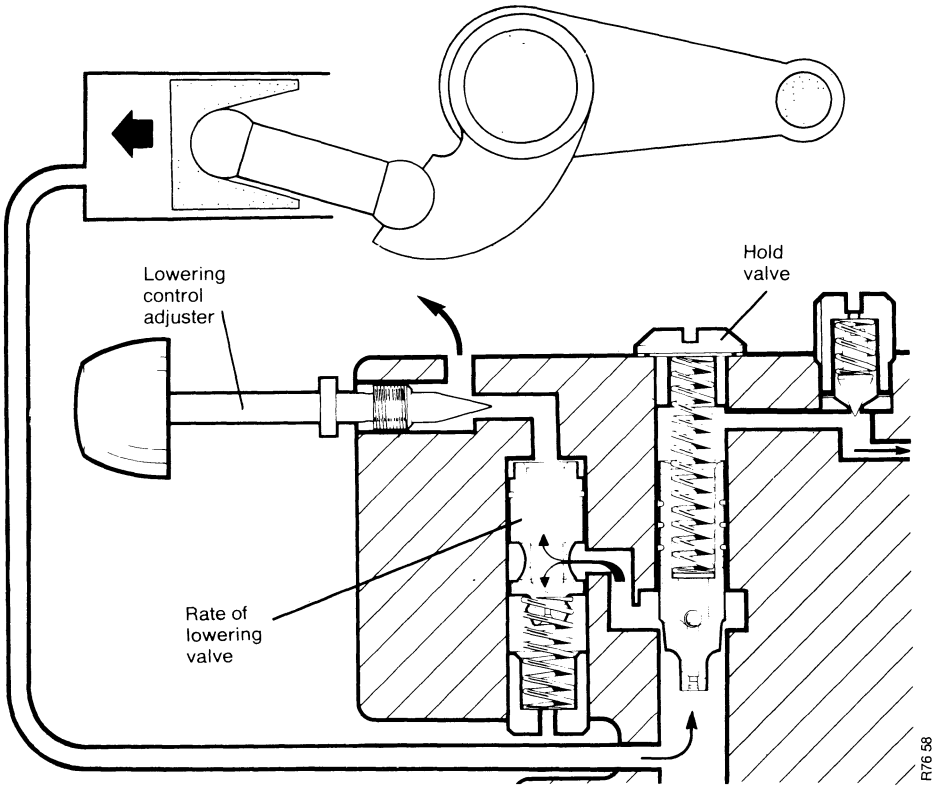

FIGURE 15 RATE OF LOWERING VALVE

Rate-of-Lowering Valve controls the flow of oil coming out of the hold valve port, valve plunger is spring-loaded towards the end of its bore and back pressure of oil tends to push plunger against its spring and therefore closes ports admitting oil into plunger Any change in back pressure caused by repositioning the control needle will make a corresponding change in position of valve plunger

The position of valve plunger and therefore opening of lowering port, is thus controlled by the position of the lowering control needle. The valve spool automatically compensating for any difference in weight of implement, by regulating the amount of port opening to give a constant flow of oil out of the system

Dump Valve is screwed into the Selectamatic valve chest. It is positioned over the hold valve plunger and is a two-position stop for the hold plunger spring. When the valve is pushed down and turned the hold plunger spring is compressed and plunger operates normally. When system is being used with equipment having a very low back pressure the valve can be turned and pulled upwards. This releases the plunger spring so that the low back pressure is able to push hold plunger off its seat and allow equipment to lower rapidly.

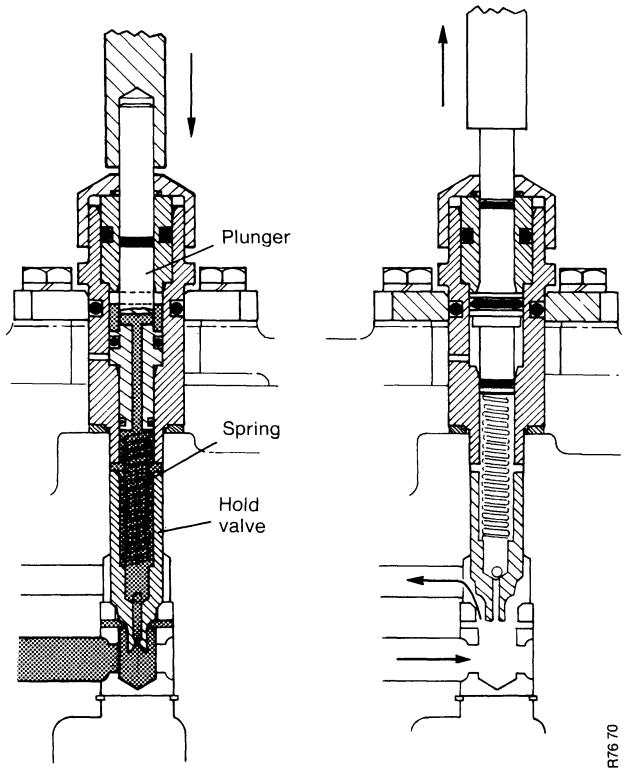

FIGURE 16
DUMP VALVE

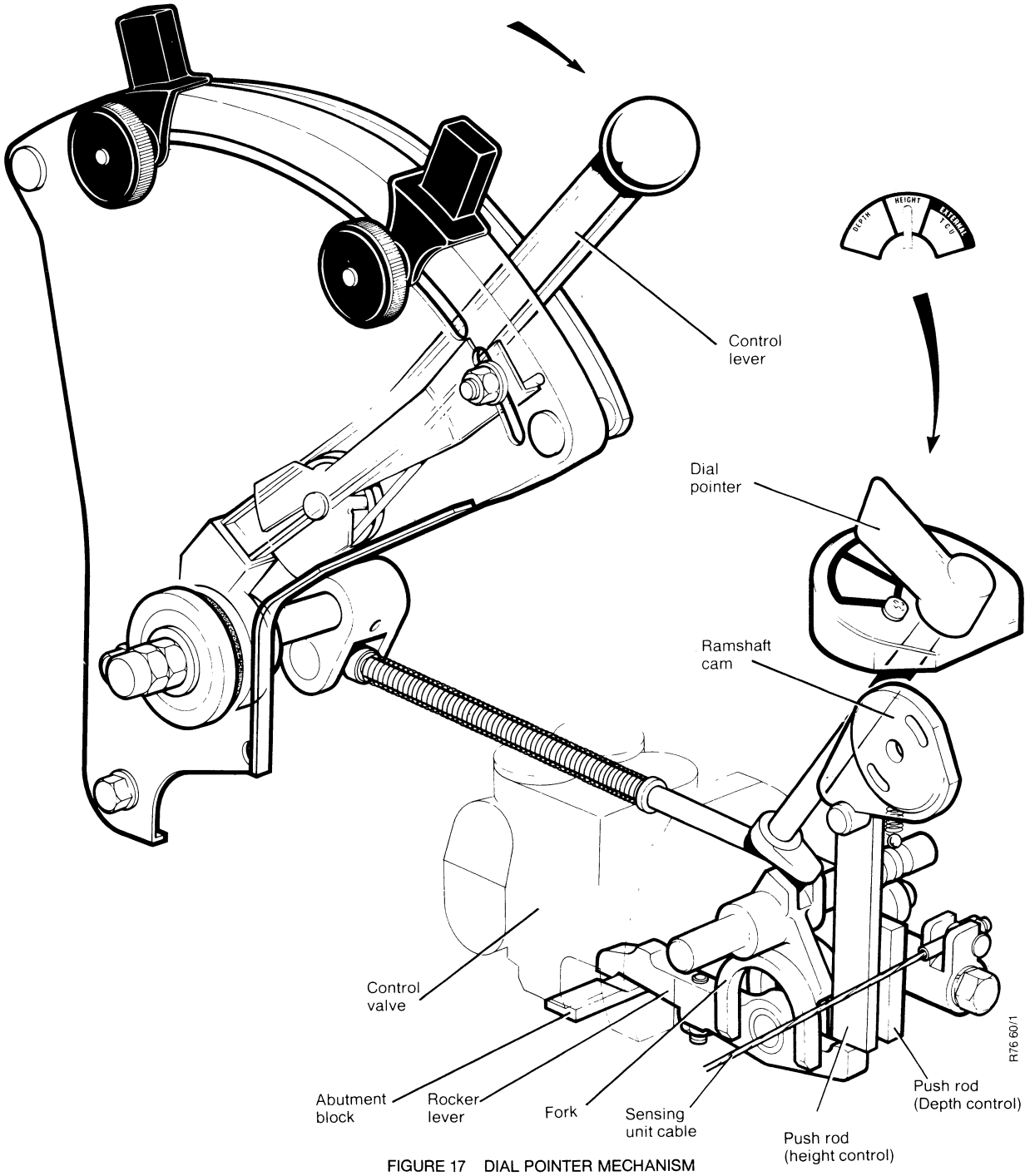

FIGURE 17 DIAL POINTER MECHANISM

Selector Dial Pointer: Selection of the method of operation, i e.: depth control, height control or TCU/EXT, is by means of the dial pointer on right-hand ramshaft bracket.

When in depth control, movement of the sensing unit must be transmitted to the spool in the Selectamatic valve, any variation in implement depth will then result in the spool valve being moved to counteract the change and restore the original depth. This is obtained by positioning the valve rocker lever under the depth control push rod so that movement of the push rod, which is connected to the sensing unit by flexible cable, also moves the valve spool

The rocker lever does however, remain under the height control push rod so that when the linkage reaches full height, the ramshaft cam pushes the valve spool into the 'hold' position and relieves the pump of unnecessary load.

Turning the dial pointer from 'depth' to 'height' slides the rocker lever sideways so that the rocker heel is clear of the depth control push rod but under the height control push rod The sensing unit is therefore, disconnected from transmitting any movement to the spool valve. As the height control push rod is in contact with the ramshaft cam any ramshaft movement will also move the push rod which in turn will move the rocker lever and valve spool. The position of the ramshaft can thus be set by the control lever and any subsequent linkage movement will then be restored automatically, by the spool valve being moved sufficient to correct the linkage movement.

Turning dial pointer into TCU/EXT slides the rocker lever further sideways so that front end of rocker rides on to abutment plate. Rocker therefore, pivots on this plate and control lever can be moved to 'raise', 'hold', 'lower' or 'TCU' position.

Traction Control: This is the David Brown method of increasing wheel grip (traction) by transferring weight from the implement on to the tractor. The additional weight on the tractor then acts as ballast and reduces wheel slip

When a tractor has a mounted implement raised on its hydraulic linkage the full implement weight is being supported by the tractor and the weight on the tractor rear wheels will be the normal tractor rear-wheel weight plus the implement weight; as the centre of gravity of the implement is not of course directly over the tractor rear wheels but some distance behind, the implement will when raised, have a leverage effect and add more weight on the tractor rear wheels than the actual implement weight

When the implement is lowered into work the tractor rear-wheel weight will return to its normal unloaded weight and the weight of the implement will rest on its own depth wheel As wheel-grip depends on rear wheel weight it will be seen that this is at maximum when implement is raised and minimum when it is in work This is exactly opposite to what is required, for maximum wheel-grip is needed when implement is in work and requires a considerable draught to pull it through the ground.

The implement is raised out of work by oil pressure in the ram cylinder. The actual oil pressure required to raise the linkage depends on the implement weight and also the geometry of the linkage but whatever the pressure is, if less than this pressure is applied in the ram cylinder the implement will not be raised. The effect of having pressure in the ram cylinder will however, be to exert an upward, or lifting, force on the implement and whilst this will be insufficient to raise the implement it will also push downwards on the tractor with an equal force The force pushing the tractor downwards will push the tractor rear wheels harder on the ground in exactly the same way as when raising the implement, the extra weight on the tractor rear wheels will not be the full implement but only a portion of it and this will make a very useful form of ballast

The amount of ballast obtained in this way is called weight transference, because weight is transferred from implement to tractor rear wheels, and is determined by the oil pressure in the ram cylinder; if the pressure is reduced the amount of weight transference is reduced until the pressure reaches zero, when no transference takes place. This gives an advantage over fixed ballast in that only the required amount of weight transference need be used and this is instantly available by just pushing the control lever forward. The TCU valve is then held on its seat and gives the required amount of back pressure in the ram cylinder

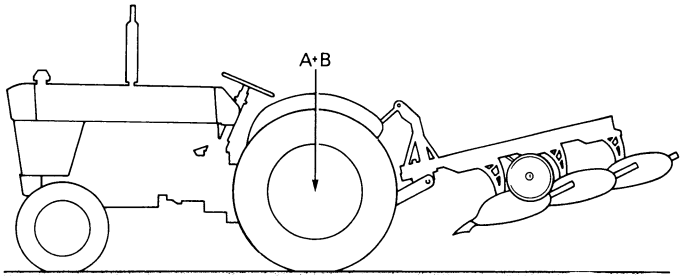

R76 61

TRACTOR WITH IMPLEMENT RAISED ON LINKAGE
Weight on rear wheels equals tractor rear wheel weight 'A' plus weight of implement'B'

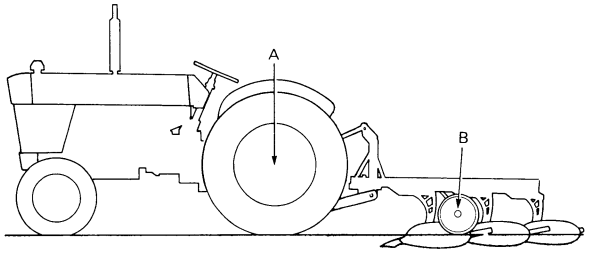

TRACTOR WITH IMPLEMENT LOWERED AND NO PRESSURE IN HYDRAULIC SYSTEM
Weight on rear wheels 'A' is tractor rear wheel weight only Weight of implement 'B' resting on its own depth wheel

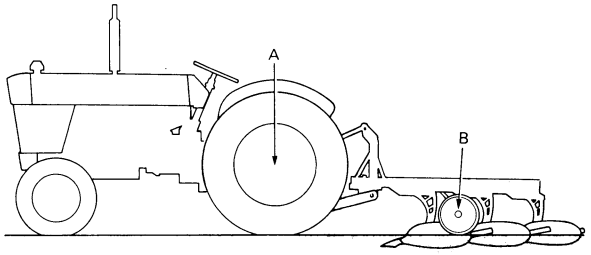

R76 62

TRACTOR WITH IMPLEMENT LOWERED AND REDUCED PRESSURE IN HYDRAULIC SYSTEM
Weight on tractor rear wheels 'A' equals tractor rear wheel weight plus a proportion of implement weight 'B'

FIGURE 18 WEIGHT DISTRIBUTION OF TRACTOR WITH MOUNTED IMPLEMENT

Ram Cylinder is housed inside left-hand side of rear axle case. When Selectamatic valve connects pump output into ram cylinder the oil pressure rises rapidly until there is sufficient pressure against piston to push piston along cylinder. The piston then turns ramshaft via connecting link and ramshaft arm, to raise the linkage. When by-pass valve is opened pump output is returned to reservoir, ram cylinder piston therefore remains stationary, hold valve and non-return valves preventing any oil passing out of cylinder

When hold valve is raised off its seat weight of implement pushes piston, via ramshaft arm and connecting link, along cylinder and forces oil out of cylinder through hold valve and rate of lowering valve.

The ram cylinder cover incorporates a locking latch. As piston reaches end of its stroke, ramshaft arm passes end of the locking pin and if pin is released into engaged position, arm will be locked to hold linkage in raised position.

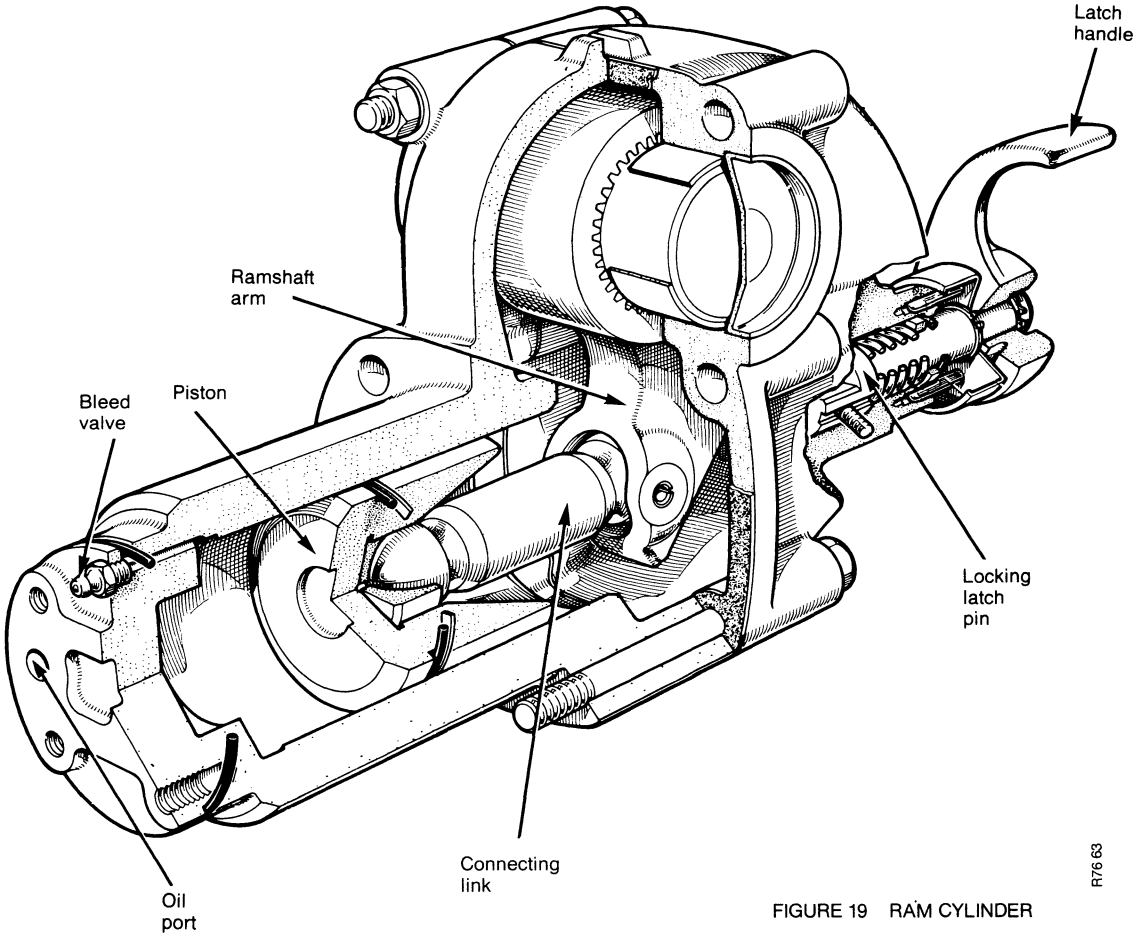

FIGURE 19 RAM CYLINDER

Linkage Support Ram: This is an additional ram cylinder which is fitted to 9 Series tractors when exceptionally heavy implements have to be supported on the linkage. Mounted on the right-hand side and bolted to the drawbar frame, the ram is connected to port 1 on the three-way take-off valve. When the take-off valve control lever is placed in position L/1 both internal ram cylinder and support ram are connected together. Both rams therefore operate together, the support ram operating directly on the right-hand ramshaft lever and the internal ram cylinder operating in its normal way.

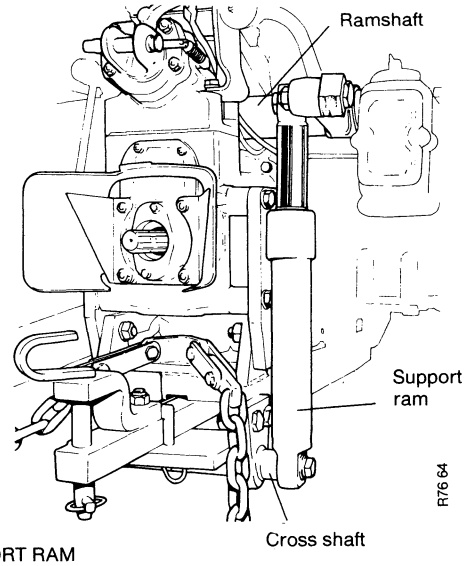

FIGURE 20 LINKAGE SUPPORT RAM

Sensing Unit: When an implement such as a plough is in work it requires an effort, which is called draught, to pull it through the ground. The actual draught required depends on many factors, such as the number and width of the furrows and the ground conditions but whatever the draught of an implement is, it must increase with the operating depth. If the depth is increased, the amount of work done by the plough is increased therefore there is a corresponding increase in the work done by the tractor, which has to pull harder to combat the increased draught. As the only connection between tractor and plough is by means of the three-point linkage the implement draught is transmitted through the three links. Due to the linkage being positioned above the plough bodies the plough tends to pivot forward as it is pulled through the ground

The plough cannot actually pivot forward because the top link will resist any pivoting force by holding the headstock away from the tractor. The amount of force required to hold the headstock away from the tractor depends on various factors such as type of plough and operating conditions but whatever the force is, it will be at a minimum when shallow ploughing, which requires a light draught, and maximum when plough at full depth and, therefore, requires greatest draught. The tendency for the plough to pivot forward and compress the top link is therefore a guide to the operating depth of the implement, for as implement depth increases the amount of compression in top link will increase. If top link is not therefore rigidly attached to tractor, but connected to a spring-loaded attachment point the amount of compression, and therefore depth of implement will be 'sensed' by this attachment point, which will compress the spring according to the implement depth.

The sensing unit therefore 'senses' the implement depth, by responding to changes in top link compression, and counteracts this by moving the Selectamatic control valve, via a flexible cable, to raise, or lower, the linkage and thus maintain a constant operating depth.

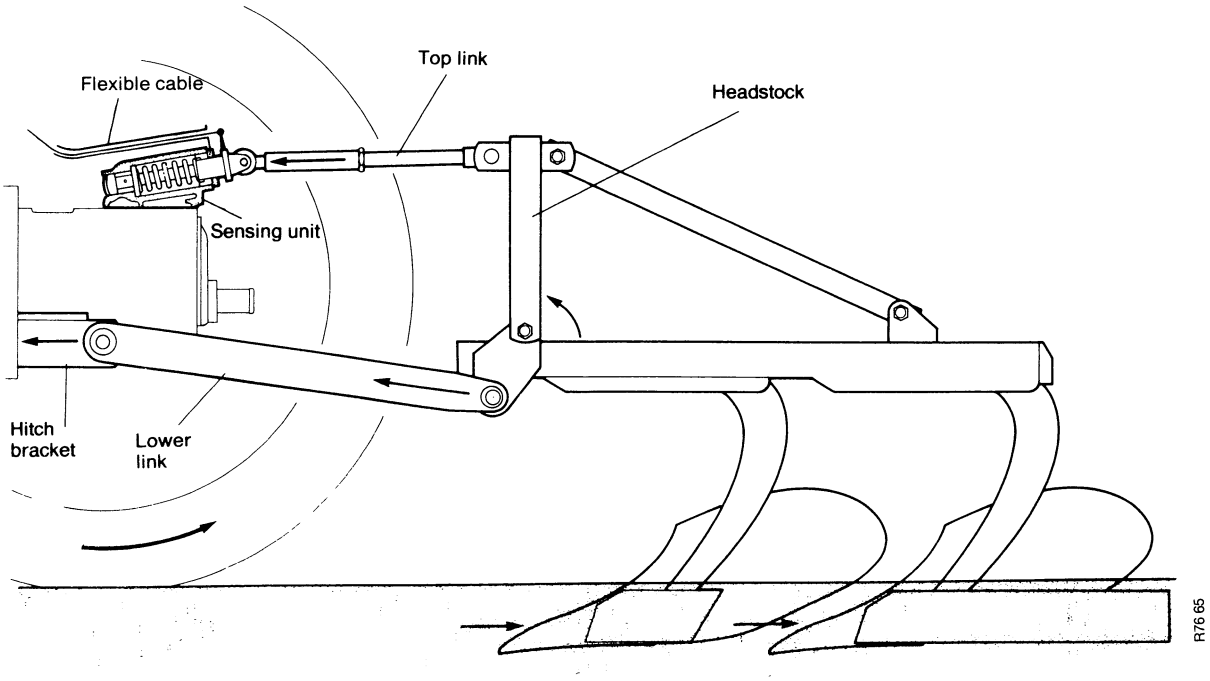

FIGURE 21 LINKAGE FORCES WHEN PLOUGHING

Selective Sensing Unit is fitted with two springs of different strengths When the spring support is turned so that it is clear of thrust washers at both ends of support, both springs are in operation but when support is turned so that shoulders on end of support are not opposite slots in thrust washer the spring at that end of support cannot then be compressed and only the remaining spring is in operation

By turning the sleeve into any of its three positions the strong, light or both springs can be brought into operation to give 'sensing' for heavy, medium or light draught implements.

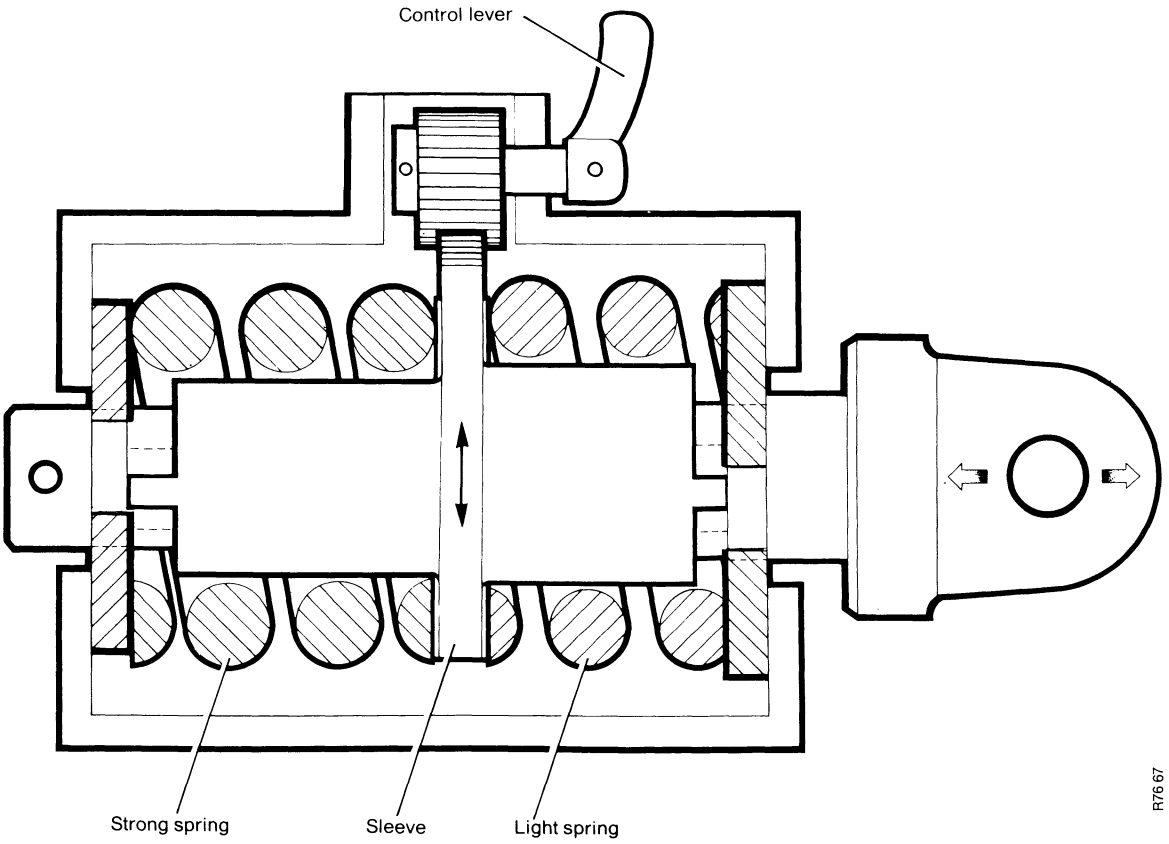

FIGURE 22 SELECTIVE SENSING UNIT

Three-point Linkage: This is the connecting link between tractor and implement. The two lower links are of fixed length but the top link is adjustable, so that the implement can be set to its most suitable working position.

The lower links are raised by the ramshaft which is connected to the links by means of two adjustable rods. The left-hand lift rod is first set to give the implement its required operating range, then the levelling lever on the right-hand side used for any levelling adjustments required when implement is in work.

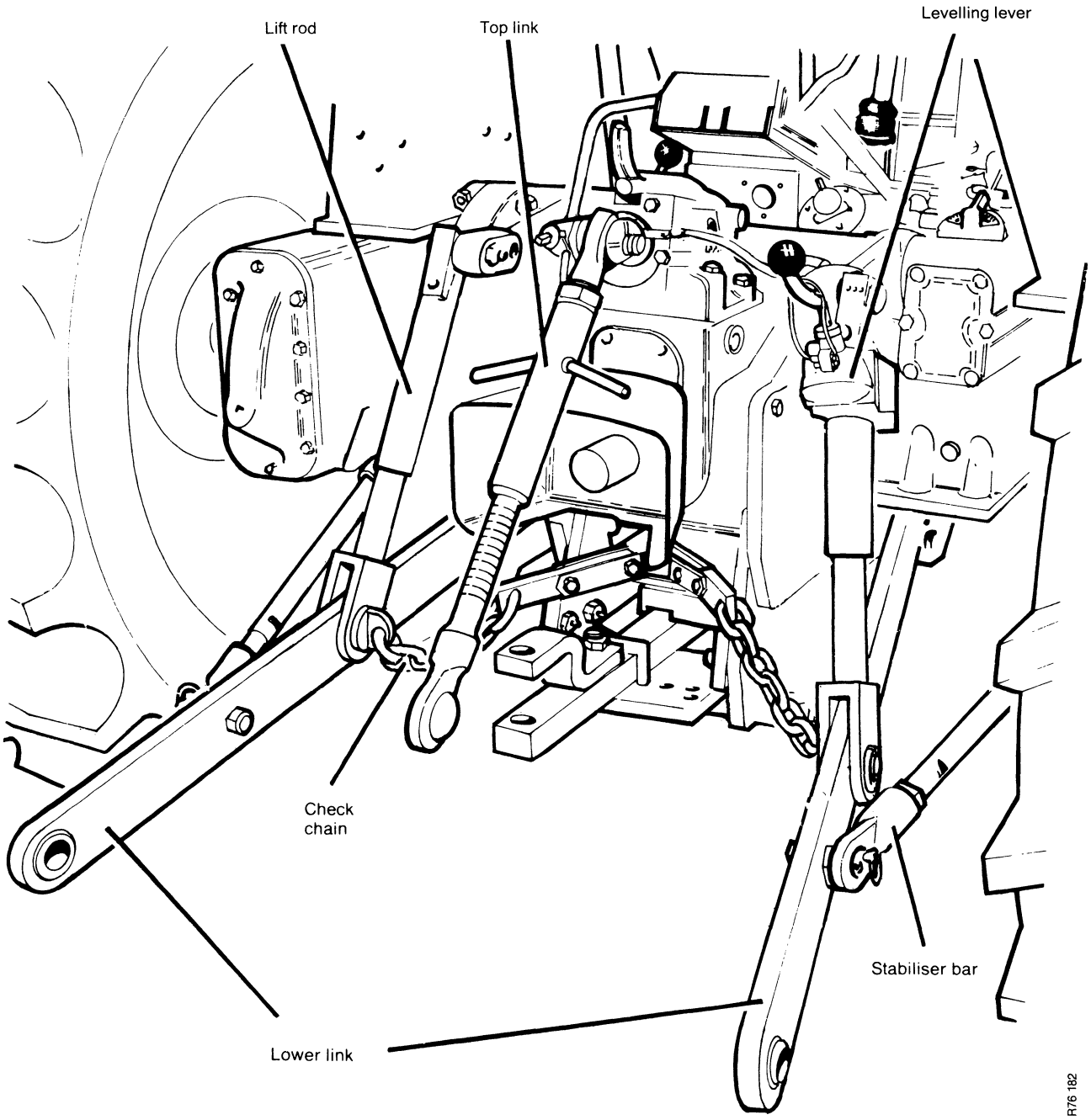

FIGURE 23 THREE-POINT LINKAGE

Three-way Take-off Valve: Fitted on the front end of the ram cylinder — in place of the connector — this valve enables the oil flow from pump to be diverted from ram cylinder to either of the two take-off points.

The valve control lever operates a spool which has four positions When spool is pushed down, inlet port in valve body is connected to upper take-off point and when spool is moved up into second position inlet port is connected to lower take-off port. When spool is moved into third position valve inlet port is connected into ram cylinder and both take-off ports are closed. Tractor linkage then operates normally and any equipment connected to the take-off ports is held stationary. Moving spool valve fully upwards connects valve inlet port to both ram cylinder and upper take-off port: any equipment connected to this port will then operate simultaneously with the tractor linkage.

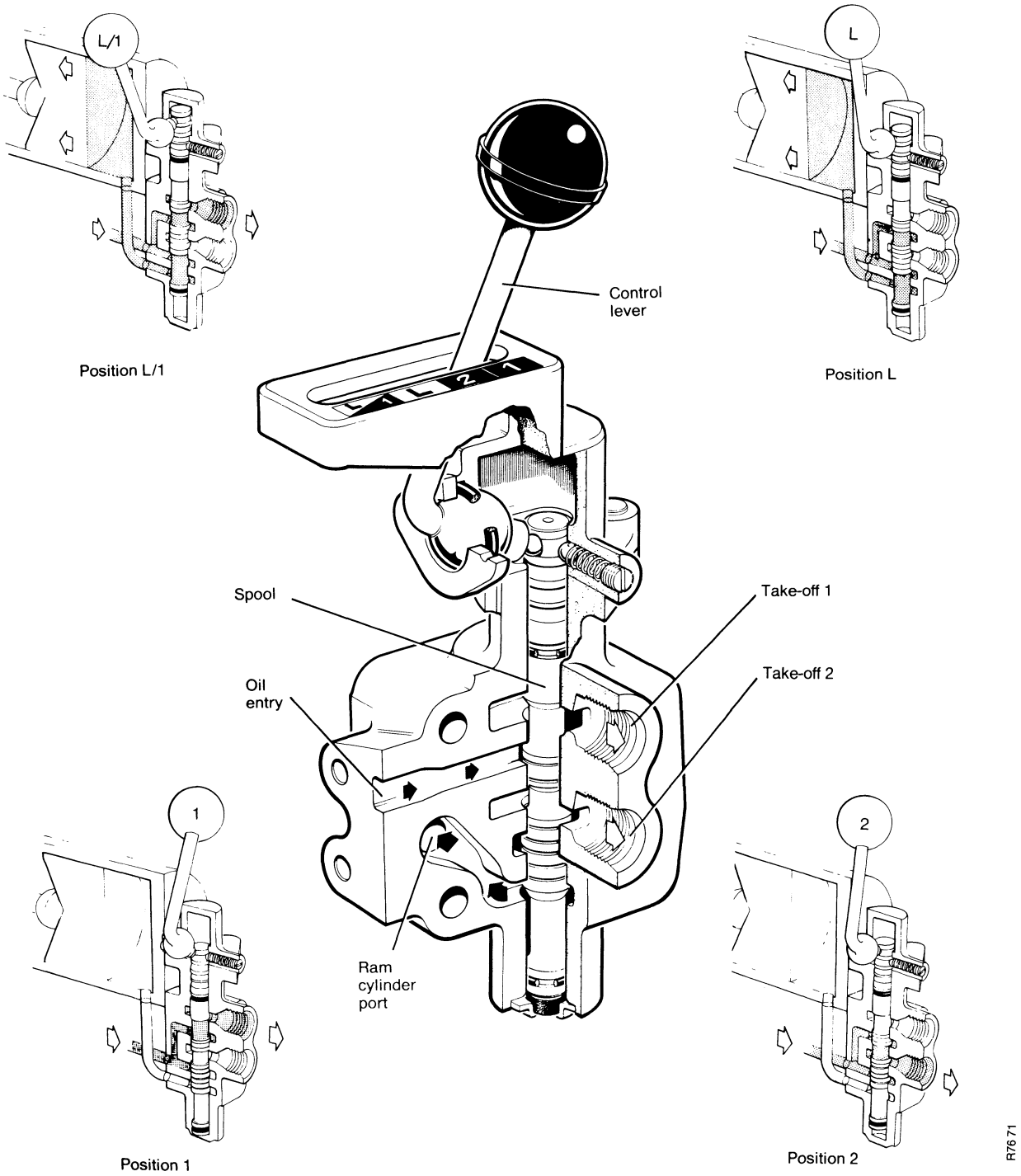

FIGURE 24 THREE-WAY TAKE-OFF VALVE

Double-acting Live Take-off Valve: This valve fits on right-hand side of rear axle case and provides a double-acting (i e oil pressure and also oil return) take-off point which is 'live' whenever pump is in operation regardless of position of Selectamatic control lever

If two double-acting take-off points are required a second valve can be bolted directly on top of first valve.

When valve lever is in its central (neutral) position pump output flows into the Selectamatic valve and oil flow to both ports is sealed The tractor hydraulic system therefore, functions normally and any equipment connected to the take-off is held stationary

Moving valve lever forwards diverts pump output from Selectamatic valve and directs it to take-off port 'A', at the same time take-off port 'B' is connected to oil return pipe to reservoir

When valve lever is moved rearwards the oil flow is reversed, port 'A' being oil return and 'B' the pressure supply. Equipment incorporating double-acting rams can thus be operated by moving valve lever either way to give the direction of motion required.

When valve lever is moved its full distance in either direction the spring-loaded detent holds the lever in this position until ram cylinder on equipment reaches end of its travel and oil pressure in system rises sufficiently to operate the automatic release. This causes valve to 'kick-out' automatically and lever returns to the neutral (central) position.

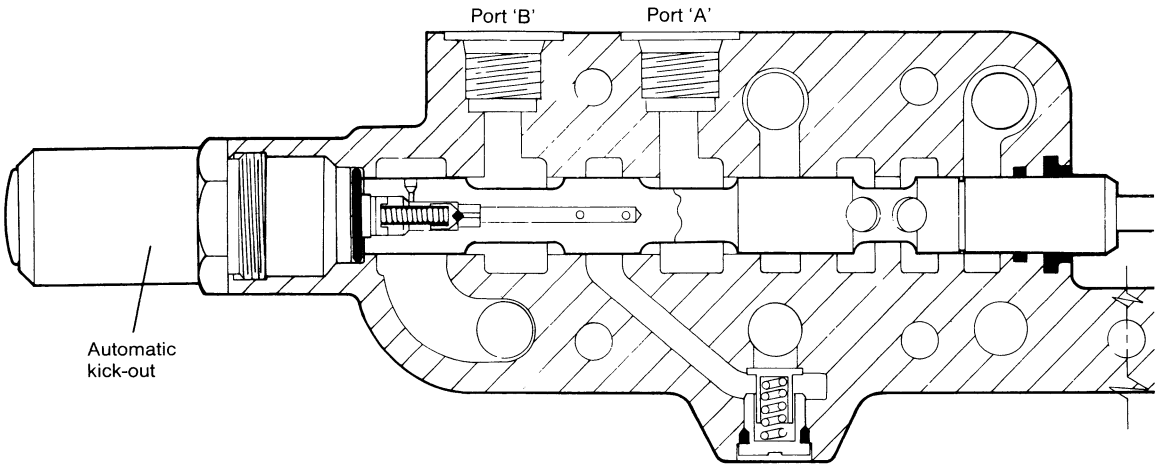

SPOOL IN NEUTRAL (CENTRAL) POSITION

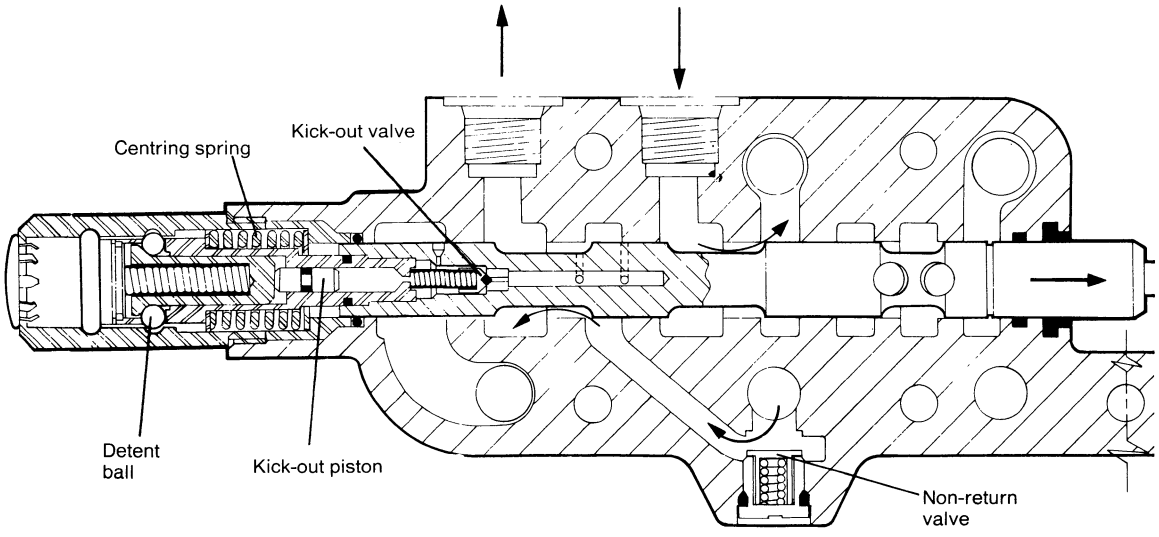

SPOOL IN DETENT (REARWARD) POSITION

FIGURE 25 DOUBLE-ACTING LIVE TAKE-OFF VALVE

FAULT FINDING

Given an adequate supply of **Clean** oil the Selectamatic hydraulic system will give long and trouble-free service Unsatisfactory operation may however be experienced if the system is incorrectly adjusted or if the transmission oil is allowed to become contaminated with dirt, or water.

If the system appears to operate incorrectly, the fault should first be located and the cause established before any dismantling is undertaken

Tools required for fault finding:-

Pressure gauge (0–4,000lb/sq in)	DB960984
Pressure gauge (0–250kg/sq cm)	DB960985
Adaptor	DB960646
Union $\frac{1}{2}$ BSP	DB962235
Flexible pipe, $\frac{1}{2}$ BSP	K84522
Connector housing	DB961821
Blanking Plunger	DB961977
Connector	DB917127
Setting gauge	DB961796

Note: Tools with prefix DB are supplied by V. L. Churchill & Co. (or their agents outside U.K.)

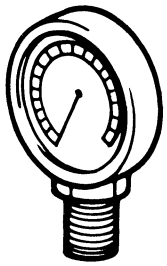

Pressure gauge — DB960984

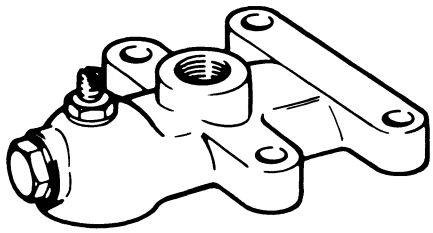

Connector housing DB961821

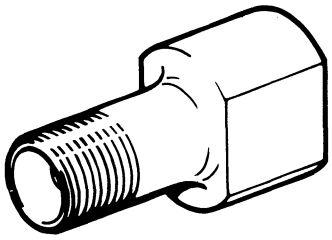

Adaptor DB960646

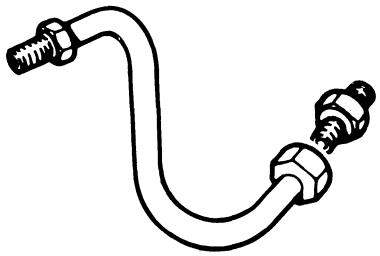

Flexible pipe
$\frac{1}{2}$ BSP K84522 &
Union DB962235

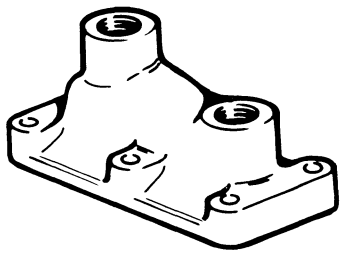

Connector DB917127

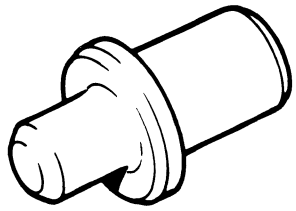

Blanking plunger
DB961977

R76 139

FIGURE 26 FAULT-FINDING TOOLS

Fault Finding Sequence

Ensure that the transmission reservoir is filled to the correct level with oil which is of the correct viscosity and at operating temperature.

To raise the temperature of cold oil select TCU/EXT and run engine at 1600/1800 rev/min at full TCU for 15 minutes. **Do not attempt to raise the oil temperature by holding the control lever in the Select position:** this will aerate the oil and possibly damage the pump.

Whilst waiting for oil to reach its working temperature, clean tractor of all external dust, particularly in areas of hydraulic controls and cover plates.

First Stage (checking tractor settings)

Before carrying out any detailed fault finding first check the following adjustments.

A. Ramshaft cam — affects hold when height or depth is selected

Remove cover plate from right-hand ramshaft bracket and lift linkage by hand. Hold the linkage in the fully raised position and engage the locking latch.

With linkage at full height check that roller at end of height control push rod is seated in the cam plate indentation If not, release the two nuts then turn the cam plate in the required direction and re-tighten the nuts.

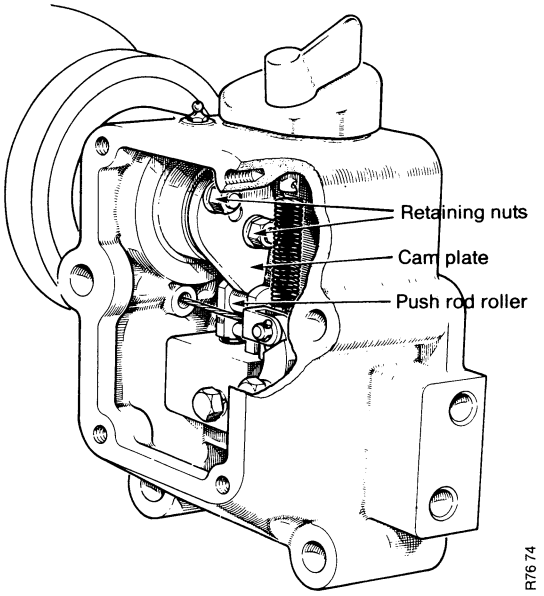

FIGURE 27 SETTING THE RAMSHAFT CAM

B. Control rod — affects TCU pressure and lift, particularly when selector is in TCU/EXT position.

With engine stopped, remove cover plate, complete with rate-of-lowering control, from front of quadrant housing and small cover plate from right-hand side of rear axle case.

Turn dial pointer into 'Height' position and lower the linkage Hold control lever fully rearwards against quadrant spring ('Select' positions).

Set position of Nyloc nut on control rod — this is accessible through front of housing — so that it is possible to turn the dial pointer from Height to TCU/EXT and back without lifting the spool valve This can be observed through axle case aperture and should be done with a dial gauge, if available

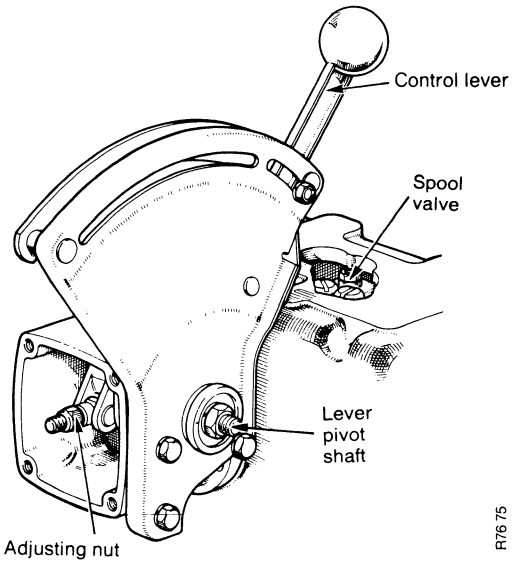

FIGURE 28 CONTROL ROD SETTING

C. Quadrant spring and friction pad adjustment — affects cancelling of pump in lift and hold positions.

Check the control lever movement: it should be free to move but not so slack that it can be moved by vibration If necessary adjust the pivot tension by tightening, or releasing, the locknuts on the lever pivot shaft

Turn dial pointer into 'Height' control position then start engine. Hold control lever fully rearwards, against quadrant spring, and allow linkage to rise.

When linkage reaches full height and relief valve starts 'screaming' move control lever slowly forwards until pump is unloaded and relief valve ceases to operate.

Pump should be unloaded when control lever is touching quadrant spring but should come under load when lever is moved rearwards against the spring

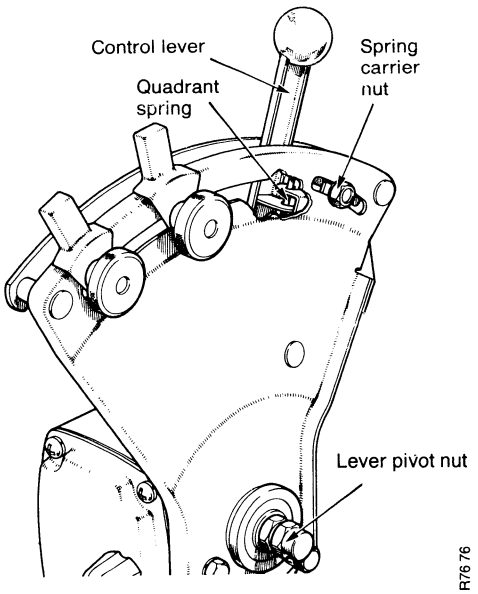

FIGURE 29 SPRING CARRIER SETTING

D. Sensing unit cable — affects hold and range of depth control on quadrant when depth selected.

Turn dial pointer into 'Depth' control position and attach test weight to lower links. If a suitable test weight is not available attach a heavy implement to lower links but use a chain to attach headstock to ramshaft instead of the top link; it is essential that the top link is disconnected so that no compression or tension load is applied to the sensing unit.

Start engine and move control lever rearwards until it touches the quadrant spring. Allow linkage to rise to full height then stop engine.

Whilst keeping clear of implement, slowly unscrew the adjuster on sensing unit cable until the linkage commences to creep down then screw the adjuster **inwards** $5\frac{1}{4}$ turns. Hold adjuster stationary and tighten locknut.

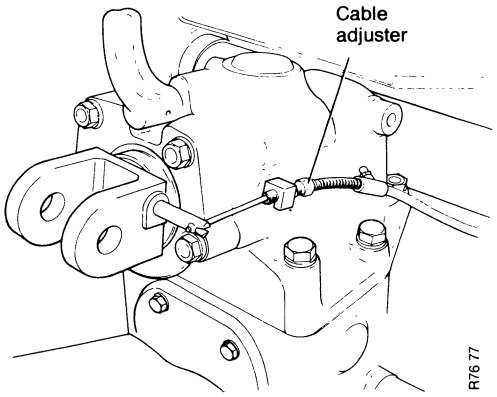

FIGURE 30 SENSING UNIT CABLE SETTING

Second Stage (checking operation)

A. Lift Test

Start engine and move control lever fully rearwards against quadrant spring.
If a considerable time lag occurs before implement commences to lift this could be due to an obstruction in the by-pass valve plunger filter or, if cleaning the filter fails to correct it, the latching valve stuck in its open position.

If implement fails to lift or lifts very slowly.

1. Ensure that dump valve is closed: pushed down and turned.
2. Check that three-way valve is set in the correct position: either L or L1.
3. Check that any live take-off valves fitted are in the neutral (central) position.
4. Check transmission oil level: extra oil may be required when using external rams.
5. Carry out hold test. If system drops in hold position, rectify hold fault before proceeding.
6. Check pump pressure: fit connector on top of rear axle case and connect pressure gauge then restart engine: a pressure reading of less than 140kg/sq cm (2000lb/sq in) could be caused by:-

   (a) choked inlet filter
   (b) suction leak on pump inlet pipe
   (c) worn hydraulic pump
   (d) faulty relief valve

   Caution: Do not run engine faster than idling speed when carrying out this test.

7. If pressure reading is satisfactory, indicating no fault on pump side of control valve, remove adaptor plate and connect pressure gauge to three-way valve, or, if no valve is fitted, use the special connector housing.

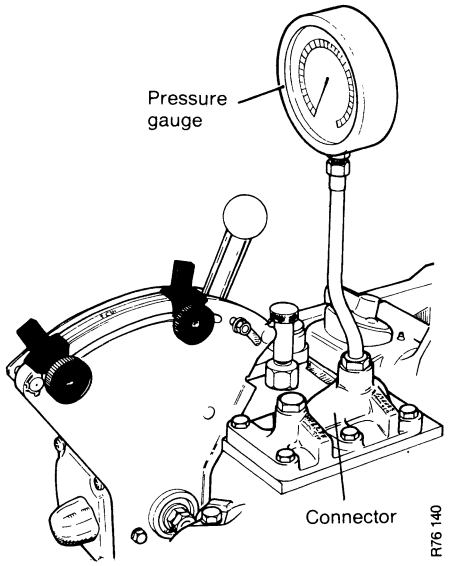

FIGURE 31 CHECKING PUMP PRESSURE

Restart engine and hold control lever against quadrant spring and note pressure reading. A low reading here could be caused by:-

(a) blocked, or seized, by-pass plunger. Remove plunger and clean filter with an air blast. Ensure that plunger moves quite freely and check that hold plunger is also free. Before replacing plungers run engine at idling speed for a few minutes, to flush valve bores with oil.

(b) if gauge shows no reading but relief valve is 'screaming', showing that pump is under load, this indicates an obstruction in control valve; probably a loose non-return valve seat.

(c) leaking 'O' rings at front of control valve or failed control valve pipe. Remove quadrant housing from front of axle case to examine pipe and 'O' rings.

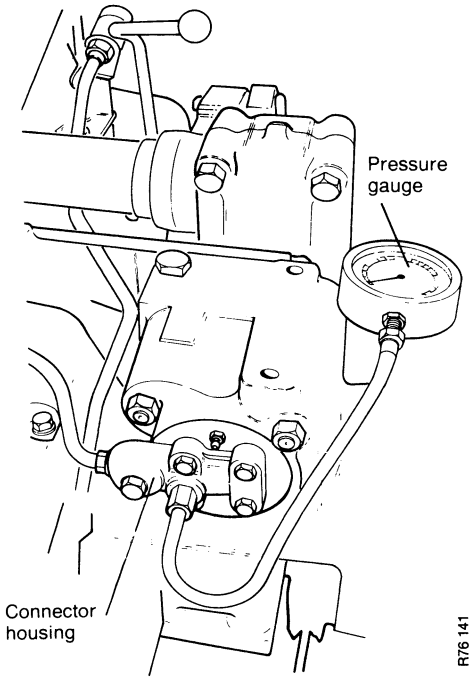

FIGURE 32 CHECKING PRESSURE AT RAM CYLINDER

B. Hold Test

1 Turn selector dial pointer into TCU/EXT then start engine and move control lever rearwards against quadrant spring Allow implement to rise then release control lever and allow quadrant spring to move control lever into its 'hold' position

2. Implement should remain stationary and if it gradually falls this indicates that oil is leaking from the system

(a) Isolate ram cylinder by moving three-way valve lever to position I, whilst implement is raised. If implement then remains stationary the leakage is from control valve or pipe, but if there is no difference the leakage is from ram cylinder or take-off valve.

(b) Remove axle cover plate and check control valve for leakage.

(c) Examine sealing washers on plugs, or dump valve for leakage

(d) Check hold plunger for leakage by using a mirror to observe any oil leaking out of lowering valve slot Any leakage out of this slot when lever is in 'hold' position indicates a leaking hold valve or a leaking 'O' ring under hold valve seat.

(e) Remove by-pass valve plunger and check level of oil in plunger bore Oil flowing into bottom of port and raising oil level indicates a leaking non-return valve

(f) Oil leakage from hold relief valve plug indicates a faulty hold relief valve.

(g) Leakage from rear face of valve chest — drips can be seen when ramshaft bracket cover is removed — indicates a leaking spool valve. Turn spool through 90° and the rate of leakage will vary

(h) Remove quadrant housing and check pressure pipe and pipe connector 'O' rings for leakage.

C. Lowering Test

1. Select 'Depth' or 'Height' position, start engine and raise linkage then move control lever into 'Lower' position. If implement is lowered correctly move on to the TCU test

2 If implement does not lower, or lowers very slowly.

(a) Check that lift latch is disengaged.

(b) Screw rate of lowering valve fully outwards

(c) Ensure that transmission is filled with oil of the correct grade oil must also be warm

(d) When operating with external rams the dimensions and positioning of the rams may result in only a small back pressure. For a reasonable rate of lowering a minimum of 7kg/sq cm (100lb/sq in) back pressure is required

(e) Incorrect TCU adjustment could cause a high back pressure — see TCU test

(f) A slow drop can be caused by the rate-of-lowering valve being seized in the closed position or by faulty assembly (plunger fitted wrong way round)

(g) If implement only lowers at slow engine speeds this could be caused by latching valve being seized in the closed position The by-pass valve will then always be held on its seat and the implement will therefore rise in both lift and hold positions of control lever The implement will only lower when the pump output is so low that it can escape past the rate-of-lowering valve. To check for a sticking latching valve, select TCU/EXT and place control lever in 'lower' position. If linkage then rises when control lever is moved from 'lower' to 'hold' this indicates a sticking latching valve

D. TCU Test

1 Connect pressure gauge into three-way valve, or ram cylinder connector

2 Select TCU/EXT then start engine As control lever is moved slowly forward into TCU range the pressure should rise to 49–52kg/cm² (700–750lb/in²)

3 An incorrect pressure reading could be caused by:—

(a) incorrectly adjusted TCU plunger
(b) incorrectly set adjusting screw in rocker lever
(c) incorrect, or broken TCU valve spring.
(d) slow build-up of TCU pressure may be due to missing ball from hold valve plunger

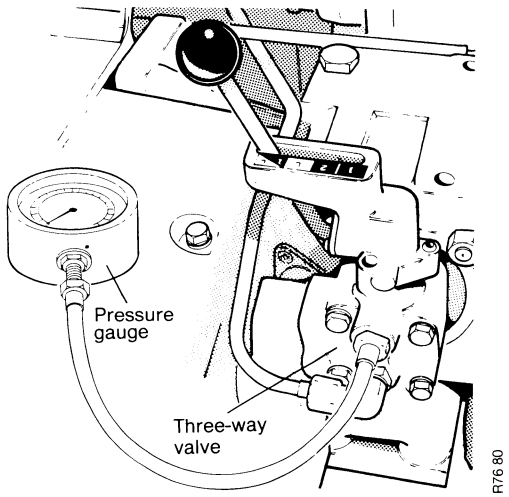

FIGURE 33 CHECKING TCU PRESSURE

E. Height Control Test

1 Select 'Height' control, start engine and move control lever slowly rearwards The implement should rise and follow the control lever. Movement up, or down, of the lever causing a corresponding movement in the linkage

2 If implement moves erratically as position of control lever is varied, check for fouling, or seizure of the control rod, push rod and other linkage

3 Heavy implements may drop slightly below the required position and then immediately return to the correct position. This is normal and is due to the slow response of the hold valve

F. Depth Control Test

1 Place dial pointer in 'Depth' position, start engine and move control lever into 'raise' position

2 Drive tractor, lower implement into work and check operating depth

3 If implement does not operate satisfactorily first check that implement is set correctly and the linkage is attached to the headstock in such a manner to give sufficient compression, or tension, in the top link

4 If tractor is fitted with a Selective sensing unit, check that the correct range is in use. It is essential that the force on the top link is sufficient to give the sensing unit shaft 1·6 to 3·2mm ($\frac{1}{16}$ to $\frac{1}{8}$in) movement when the implement is in work. The sensing unit cannot operate correctly if the force is so great that it holds the spring fully compressed or if it is insufficient to compress the spring at all.

5 If the implement depth fluctuates, check for a seized or damaged sensing unit, sticking or damaged cable or cable linkage: bell crank lever, push rod, etc

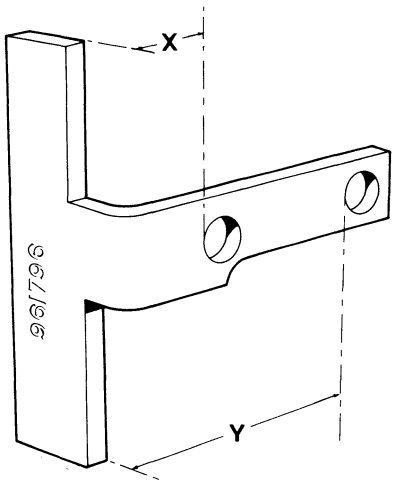

X = 0·437 in.(11·1mm)
Y = 1 580in.(40·1mm)

FIGURE 34 SETTING GAUGE
(Service Tool DB961796)

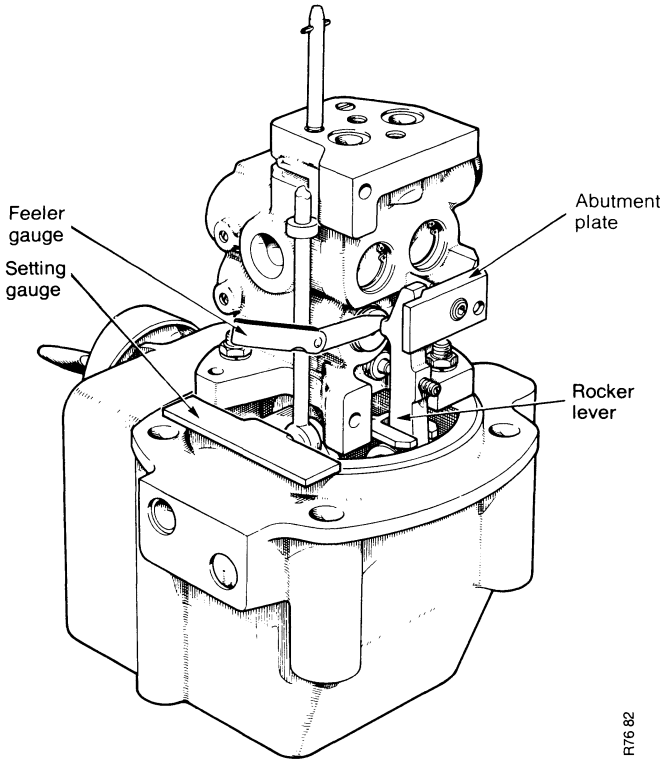

FIGURE 35 SETTING THE ABUTMENT PLATE

The settings and adjustments required on the Selectamatic system may be divided into two groups

The first group (Nos. 1 and 2) are bench settings and are only required when a control valve is fitted to a ramshaft bracket

The second group (Nos. 3 to 7) are tractor settings and must be carried out whenever any dismantling is done which disturbs the original settings. Note that tractor settings for models fitted with a 'Q' cab (which have a different control layout) are listed separately on page 30

ONE — Setting the abutment plate
After bolting valve assembly on to ramshaft bracket, place dial pointer in TCU/EXT position. Engage inner hole of setting gauge on the rocker shaft pin and hold gauge against face of bracket spigot. With abutment plate firmly bolted in position and touching the underside of rocker lever, check clearance between the rocker lever and spool valve this should be 0·025 to 0·075mm (0·001 to 0·003in). If the clearance is incorrect remove abutment plate and add or remove shims as required. Ensure abutment plate seats correctly when refitted and after firmly tightening retaining bolt, recheck the clearance.

TWO — Setting the TCU valve screw
With the dial pointer in the TCU/EXT position, engage outer hole of setting gauge on the rocker shaft pin and hold gauge against face of bracket spigot. After releasing the locknut tighten adjusting screw until it just touches the TCU valve, but does not compress the spring, then screw **in** a further **complete turn** and firmly tighten the locknut. As the point at which the ball valve just touches its seat is not easy to determine, this setting should be done with the valve inverted and a 0·05mm (0·002in) feeler gauge inserted between the plunger and screw. The adjusting screw can then be screwed inwards until it begins to hold the feeler gauge, then the gauge withdrawn and the adjusting screw screwed in further as required.

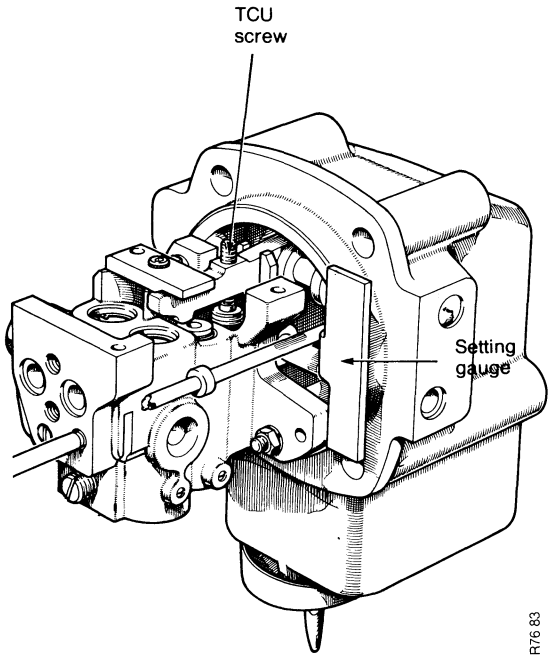

FIGURE 36 SETTING THE TCU VALVE SCREW

THREE — Setting the ramshaft cam
Remove cover plate from right-hand ramshaft bracket and lift linkage by hand. Hold the linkage in the fully raised position and engage the locking latch.

With linkage at full height check that roller at end of height control push rod is seated in the cam plate indentation. If not, release the two nuts then turn the cam plate in the required direction and re-tighten the nuts

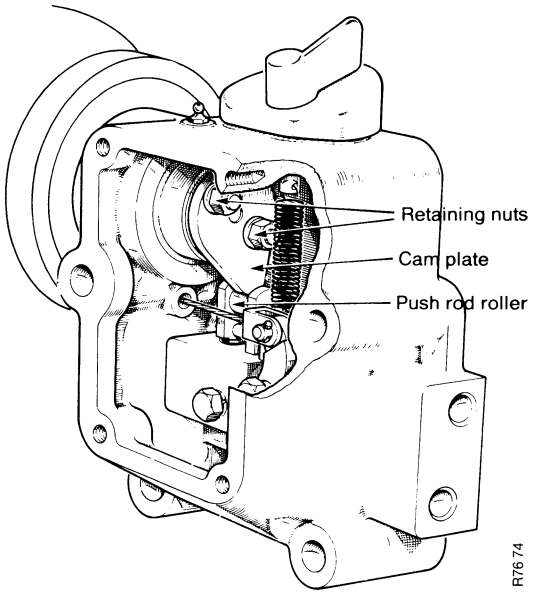

FIGURE 37 SETTING THE RAMSHAFT CAM

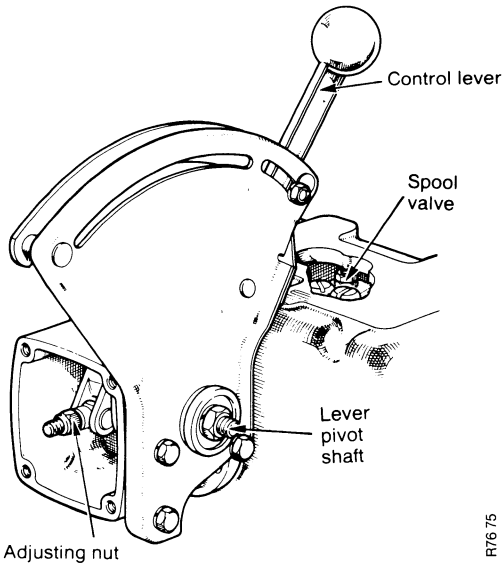

FIGURE 38 SETTING THE CONNECTING LINK NUT

FOUR — Setting the connecting link
Disengage lift latch, lower the linkage and remove cover plate from top of axle case. Remove cover from front of control lever housing and unscrew the Nyloc nut until it is level with the end of the connecting link. Release the spring carrier nut and slide carrier to the rear of quadrant slot. Place a small spanner between the control lever and rear finger guide, then move the finger guide rearwards until the control lever is pushed into the Select position and tighten the finger guide clamp nut to hold the control lever in this position Rest a finger on top of the spool valve and with the control lever held in the Select position, flick selector knob from TCU/EXT to Height and back to TCU/EXT a few times. Flicking the selector knob in this manner will cause the spool valve to lift and when this movement can be felt — and it is useless to proceed until movement of the spool valve has been established — tighten nut further on to connecting rod Recheck spool valve movement after each turn of nut, noting that the amount of valve movement will reduce as nut is tightened. Continue tightening nut until the point is reached where **spool valve movement just ceases.** As it is important to tighten the nut only to the point where valve movement ceases and not past this point, take extra care when reaching this position. Check valve movement more frequently and do not confuse a slight kick of the valve with actual movement If in doubt, unscrew nut a little and try again.

Later tractors have a plug at the rear of the axle cover plate to enable spool valve movement to be checked with a dial gauge. If plug is removed and a dial gauge mounted so that its finger passes through the hole and rests on top of spool, valve movement will be shown when dial pointer is flicked from TCU/EXT. to Height and enable the nut to be tightened until movement just ceases. Do not confuse a slight kick of the needle with actual movement: if needle kicks but returns to its original position the valve is not actually moving.

When the nut has been set correctly, replace control lever housing cover, turning the lowering control knob so that spindle slot engages with the needle valve peg.

FIVE — Bleeding the system
Start engine and bleed the system by first removing the cover plate from the right-hand side of rear axle case, to gain access to the two plugs on the control valve, unscrew both plugs about two turns and place control lever in Select position until air-free oil is expelled. Move control lever forward, to make the pump inoperative, before firmly retightening the plugs; otherwise the pressure may prevent the washers from seating correctly and cause leakage later. Replace inspection cover on top of axle case and remove air from ram cylinder

Unscrew the bleed valve at front of ram cylinder until air-free oil is expelled.

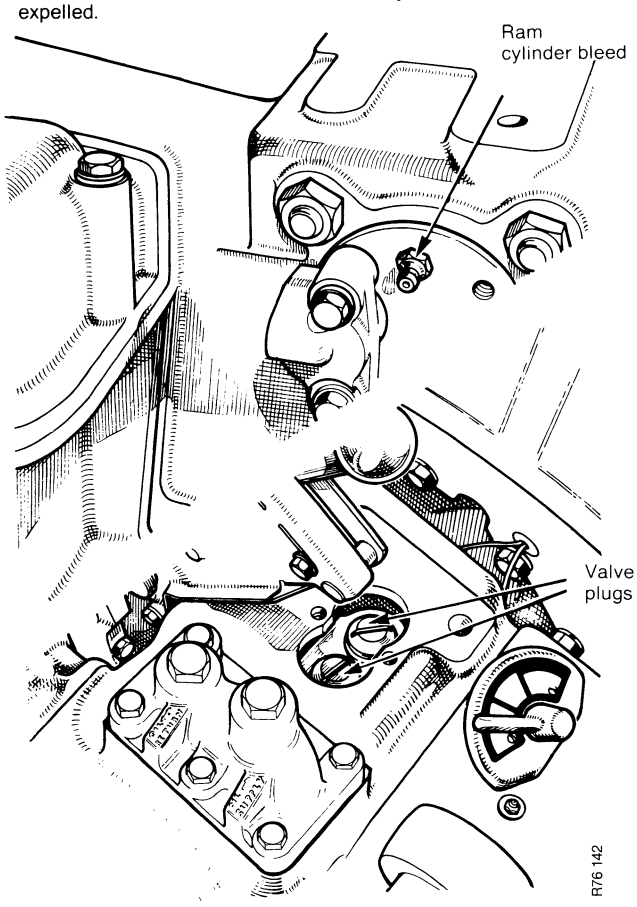

FIGURE 39 BLEEDING THE HYDRAULIC SYSTEM

SIX — Setting the quadrant spring

Check the movement of control lever; it should be free to move but not so slack that it can be moved by vibration If necessary adjust the pivot tension by tightening, or releasing, the locknuts on the lever pivot shaft.

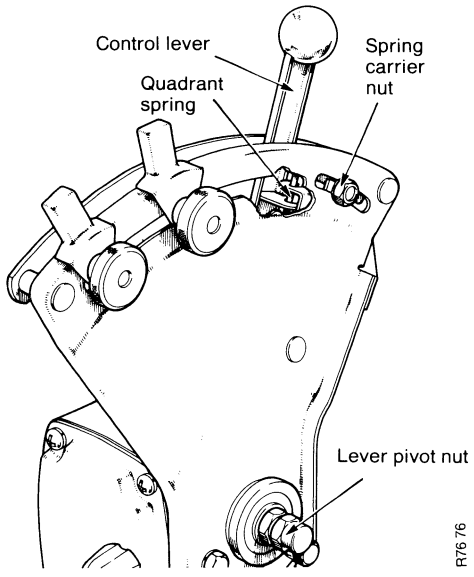

FIGURE 40 SETTING THE QUADRANT SPRING

Place the control lever in the Select position and turn selector knob into the Height position. Start the engine and allow linkage to rise. When the linkage reaches full height the pump relief valve will open and make a 'screaming' sound When this occurs move control lever slowly forward until the 'screaming' stops, then release spring carrier nut and move spring carrier forward in its slot until it touches, but does not move the control lever, and tighten the nut As overheating of the oil and premature wear of the pump will take place if pump relief valve is in continuous operation, ensure that the valve only operates when control lever is held against the spring and does not operate when the lever is released. If necessary make a slight adjustment to the spring carrier before finally tightening the clamp nut.

SEVEN — Setting the sensing unit cable

For this setting it is necessary to have weight on the lower links but the top link disconnected, so that no compression or tension load is applied to the sensing unit. This condition may be achieved in a number of ways; a bar across the link-ends so that a weight can be supported is ideal, but a plough can be used if it is first lifted normally, a support placed under the rear landside and then slowly lowered until the top link can be disconnected (placing the selector knob in Height control will enable this operation to be carried out quite easily).

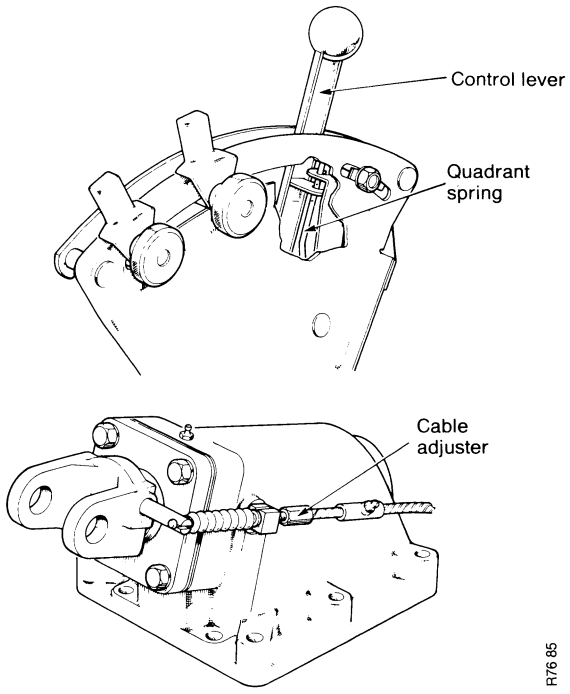

FIGURE 41 SETTING THE SENSING UNIT CABLE

With weight on the lower links and top link disconnected, place selector knob in Depth control position, After releasing the locknut, screw cable adjuster fully inwards to ensure that there is slackness in the cable. Move control lever rearwards until it touches the quadrant spring and start engine. Allow linkage to rise to full height and reach the Hold position then stop engine. With control lever touching quadrant spring, screw the adjuster outwards until linkage commences to creep down then screw adjuster **inwards** five-and-a-quarter turns (9 series) or nine and a quarter turns (885) before tightening locknut.

Q cab adjustments: On Q cab tractors all internal adjustments are identical to those listed for non-Q cab models but external control adjustments differ. Prior to carrying out adjustments, it is recommended that a 0–250kg/cm² (0–4000lb/in²) pressure gauge is fitted, with the 3-way valve lever in the L or L1 position to give an accurate indication of relief valve operation. If connecting link setting cannot be obtained using the following procedure, use method detailed for non-Q cab tractors

Note: Before making any adjustment, ensure that friction lever select stop contacts its abutment bracket with quadrant lever held fully rearwards. Move quadrant select stop or adjust control rod length if necessary, to obtain this condition before proceeding.

ONE — Setting the ramshaft cam

Engine — Stopped
Dial selector — HEIGHT
Linkage — fully raised
} Conditions prior to adjustment

Adjust height control so that push rod roller engages on the cam indentation.

TWO — Bleeding the system

Engine — Running
Dial selector — HEIGHT
Quadrant lever — SELECT
Bleed system as for non-Q cab models

THREE — Setting the connecting link

Engine — 800 r.p.m.
Dial selector — EXTERNAL
Linkage — Raised
Quadrant lever — SELECT
Adjust by screwing the connecting link Nyloc nut anti-clockwise until relief valve will not unseat. Then screw nut clockwise in stages of $\frac{1}{4}$ turn until relief valve just unseats positively when quadrant lever is moved slowly from LIFT to SELECT

FOUR — Setting the quadrant lever spring

Engine — 800 r.p.m.
Dial selector — HEIGHT
Linkage — raised
Quadrant lever — SELECT

Adjust friction lever locknuts to obtain maximum drag whilst permitting positive return of lever from Select position. Check action only with locknuts tight Adjust select spring carrier to ensure that pump relief valve stops unseating when the hand lever is slowly released from Select position, but without the linkage dropping from its raised position.

FIVE — Setting the quadrant lever control rod

Engine — stopped
Dial selector — HEIGHT
Linkage — lowered
Quadrant lever — rod disconnected
Adjust control rod so that friction lever (Fig. 42) is held against lower stop when hand lever is 3mm ($\frac{1}{8}$in) clear of forward end of quadrant slot. If there is insufficient drop on height control, file 3mm ($\frac{1}{8}$in) off fixed stop pin and file forward end of slot to suit. Repeat rod adjustment checks on completion.

SIX — Setting quadrant select stop

Engine — 800 r.p.m.
Dial Selector — EXTERNAL
Linkage — raised
Quadrant lever — SELECT
Adjust select stop on quadrant so that it just contacts the hand lever when friction lever stop is against the select stop abutment with the relief valve unseated. If there is insufficient rearward adjustment available, file forward end of quadrant slot and repeat adjustments FIVE and SIX

SEVEN — Setting the sensing unit cable

Engine — stopped
Dial selector — DEPTH
Linkage — raised
Quadrant lever — LIFT
Adjust as for non-Q cab tractors.

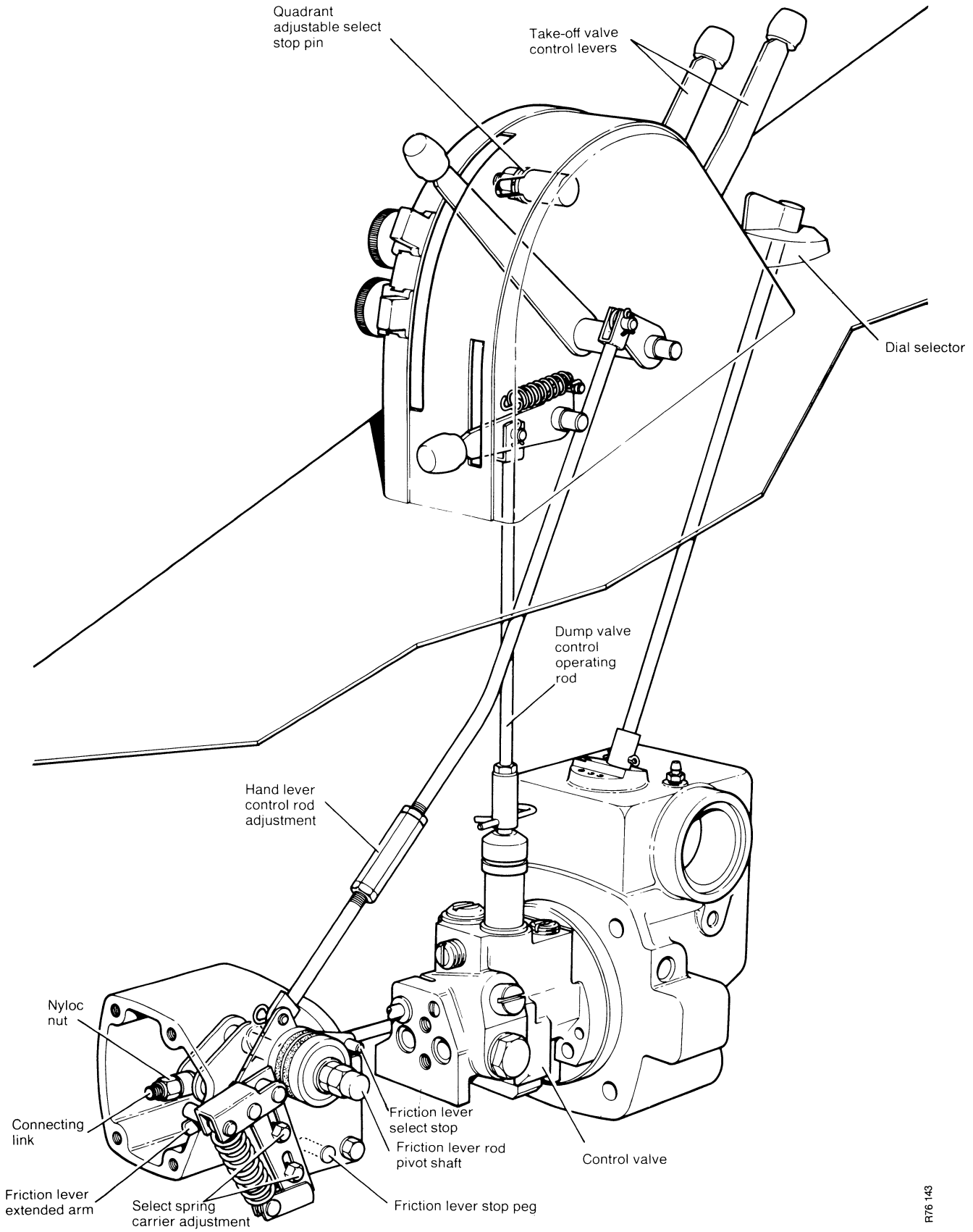

FIGURE 42 Q CAB CONTROL ADJUSTMENT

IMPORTANT

Before attempting to remove any plugs, covers or hydraulic system components it is essential that the surrounding area of the tractor is thoroughly cleaned.

Failure to observe this precaution will result in dirt entering the transmission oil and causing faulty operation of the hydraulic system after re-assembly.

Full Flow Filter: The paper element should be renewed every 500 hours, or if the warning lamp is not extinguished when engine is running at 1800 rev/min and oil is warm.

To renew filter it is first necessary to drain transmission oil, by removing cover drain plug: if oil is to be re-used drain it into a clean container and keep it covered.

After draining the oil, remove housing cover and filter assembly. Separate the filter from cover, wash the screen filter in clean fuel oil then clean with an air blast: ensuring that no particles are left adhering to the magnet. Do not attempt to clean a paper element and handle new elements very carefully; the edges of the element are easily split when dry and a damaged element is useless.

Replace screen filter on a new paper element then after cleaning cover fit filter assembly on cover, ensuring the 'O' rings at top and bottom of element are correctly seated. Clean housing face, fit a new gasket then replace cover, tightening bolts evenly.
Replace drain plug.

Refill transmission with oil. If original oil is being re-used, pour this through a funnel fitted with a fine screen filter and discard the last gallon, which will have accumulated any sediment.

Non Full Flow Filter: Early tractors not incorporating full flow filtration have a separate by-pass oil filter located on rear axle case. Screen and magnetic filter only are fitted in sump. Renew by-pass filter element every 500 hours and clean screen and magnetic filter at same time Use clean paraffin for cleaning purposes and fit new sump cover gasket upon re-assembly Tighten sump cover bolts evenly to avoid distortion of cover

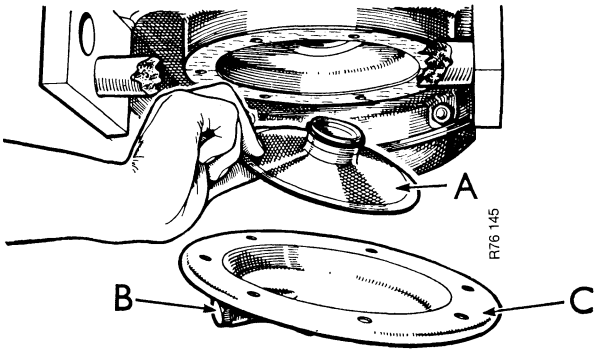

FIGURE 44 GAUZE AND MAGNETIC FILTER

A. Filter gauze B. Drain plug C Sump cover

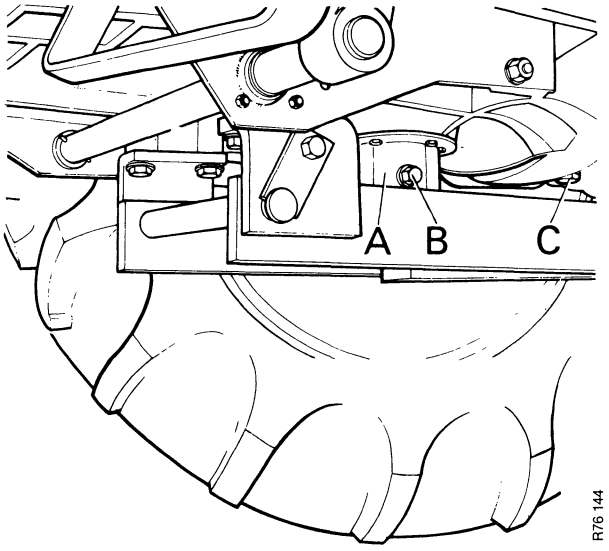

FIGURE 43
FULL FLOW TRANSMISSION OIL FILTER

A. Filter Housing B. Transmission Drain Plug
C. Rear Axle Drain

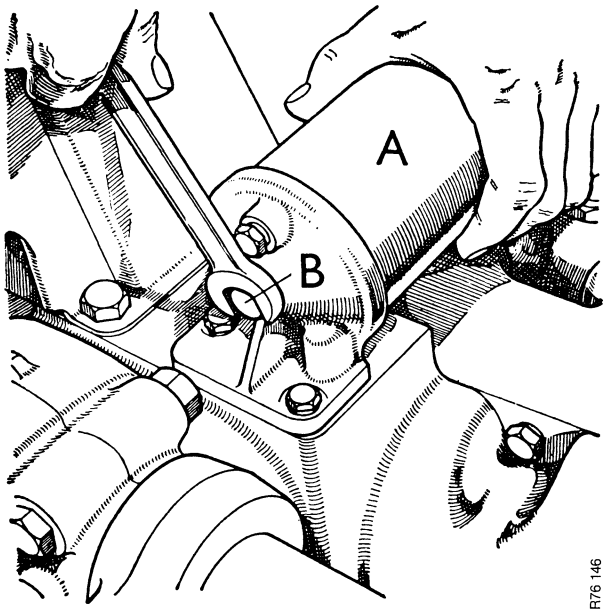

FIGURE 45 BY-PASS OIL FILTER

A. Filter bowl B. Bowl securing bolt

Hydraulic Pump: Whilst draining the transmission oil, disconnect drawbar frame from hitch plates and lower the rear end of frame to ground.

When transmission is drained of oil, **remove the vacuum switch adaptor from underside of the PTO case.** (Switch is not fitted on early tractors). Disconnect the check chains, slacken sensing unit bolts, remove PTO flange bolts and install two guide studs ($\frac{7}{16}$ UNC × 75mm) Free PTO unit from rear axle casing dowel and then remove sensing unit. Withdraw PTO unit rearwards clear of tractor

The hydraulic pump is mounted on its support plate and is exposed when PTO unit is removed. To remove pump from its support, renew the four setscrews attaching oil inlet pipe to base of pump body then remove the two setscrews and nut from pump body, before carefully levering the pump off its dowels. Removing the pump will expose the pump outlet connection, which protrudes through the support plate and into the pump body.

Before refitting a pump, first fit new 'O' rings on pump outlet connection and inlet pipe flange, then carefully push pump into position on its dowels: DO NOT STRIKE, OR PUSH AGAINST THE DRIVE GEAR. Tighten the pump mounting bolts evenly then replace the four setscrews in end of pump inlet pipe.

Check that PTO cardan shaft is engaged in its clutch plate splines: turn and push coupling until shaft cannot be turned.

Smear a new gasket with grease and fit it on support plate Screw two guide studs, $\frac{7}{16}$UNC × 3in (75mm) into two opposite axle case bolt holes. Lift PTO unit on to studs and slide it into position. Engage high ratio and turn PTO output shaft until input shaft splines are engaged into coupling splines. Do not use force to push the unit into position: if unit will not go "fully home", turn engine so that the pump driving gears are turned into mesh with stationary pump gear Unscrew guide studs, fit retaining bolts and replace the vacuum switch adaptor (where fitted). Reconnect check chains and drawbar frame, replace drain plug and refill transmission with oil. If original oil is being re-used, pour it through a funnel fitted with a fine screen filler and discard the last gallon which will have accumulated any sediment Replace sensing unit.

Running in a new pump: When a new, or overhauled pump is fitted, it should be run in for a minimum period of 10 minutes To 'run in' a pump, place dial pointer in TCU/Ext position and control lever in Lower position Start engine and run at approx 1500 rev/min whilst very slowly moving the control lever forwards so that after 8 or 9 minutes a position of full TCU is reached, then follow this with a minute of three-second periods in the Select position Do not hold the control lever in the Select position for long periods otherwise the internal pump seals may be damaged

If output pressure is correct, pump is suitable for normal service.

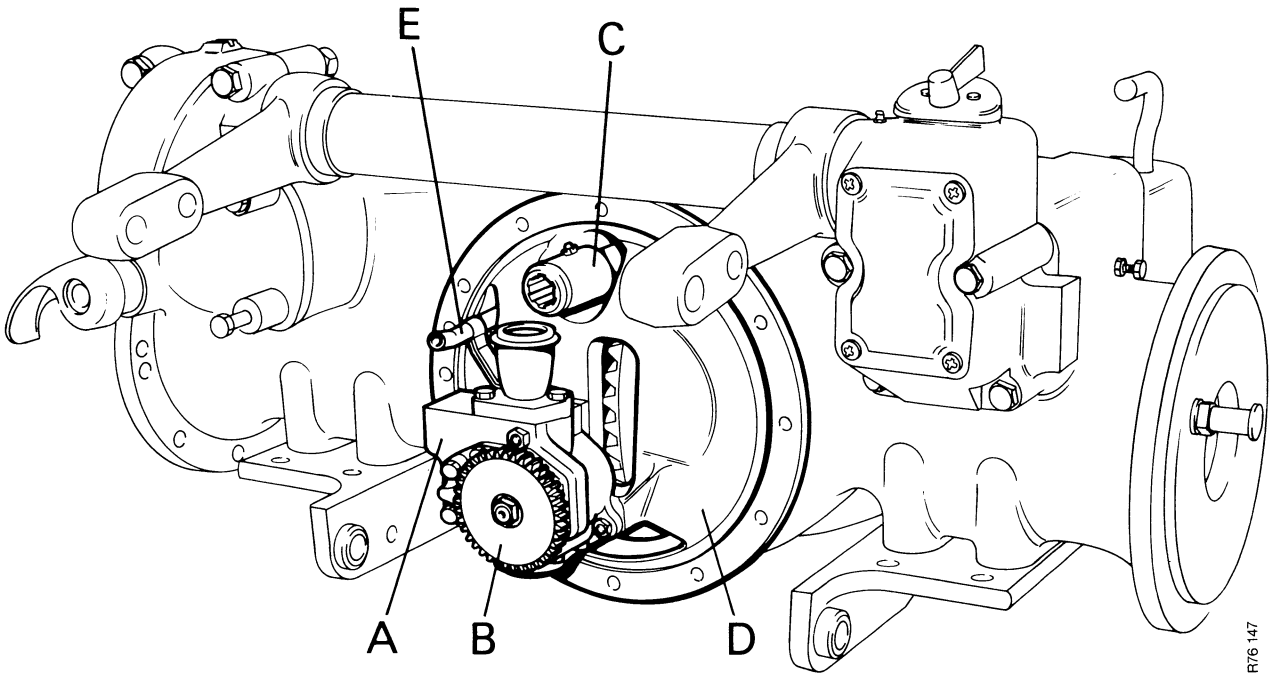

REAR AXLE WITH PTO UNIT REMOVED

A Hydraulic pump
B Pump drive gear
C PTO driving shaft
D. Pump support plate
E PTO oil feed pipe

FIGURE 46
HYDRAULIC PUMP

Pump Relief Valve: As this is attached to top of pump body it is therefore necessary to drain the transmission oil into **clean** containers and remove the PTO unit: not forgetting to first remove the vacuum switch adaptor from underside of the PTO case.

Withdrawing the PTO unit will expose the hydraulic pump and removing the three bolts from valve flange will enable the relief valve to be removed.

Before refitting a relief valve, fit a new 'O' ring in groove on pump body to face then fit valve and tighten the retaining bolts evenly

Fit a new gasket on pump support plate, after smearing it with grease, screw two guide studs into axle case then check that PTO cardan shaft is engaged in its clutch plate splines, by pushing and turning shaft coupling until it locks.

Refit PTO unit, engaging high ratio and turning output shaft until input shaft engages in drive coupling splines. If necessary turn engine so that pump driving gear teeth are meshed correctly: it should not be necessary to force the PTO unit into position.

After bolting PTO unit in position, replace vacuum switch adaptor and refill transmission with oil If original oil is being re-used, pour it through a funnel fitted with a fine screen filter and discard the last gallon, which will have accumulated any sediment.

Dump Valve: Dump valve is fitted through right-hand side of rear axle case, thoroughly clean this area before commencing valve removal. To remove valve, simply unscrew it from the control valve body, ensuring that no dirt falls inside the axle case.

When refitting valve, smear sealing ring with grease so that it will remain in position with valve inverted. With the hold plunger spring in centre of its bore, screw valve into place then firmly tighten.

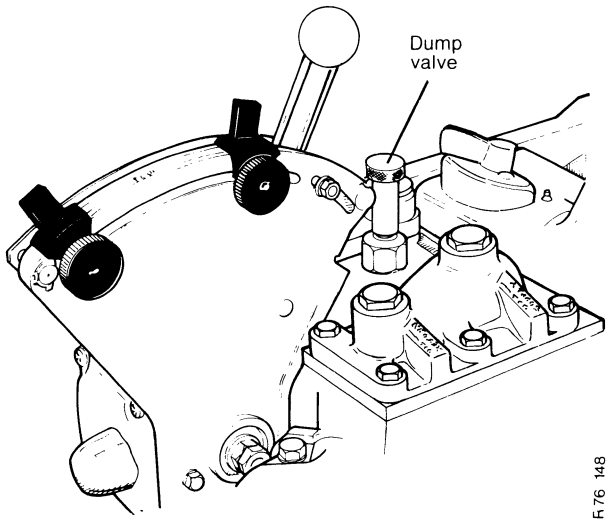

FIGURE 47
DUMP VALVE

Sensing Unit: Bolted on top of the PTO case, where it provides the anchorage for the tractor end of the top link, the sensing unit should first be cleaned before removal

Disconnect flexible cable, remove top link then remove bolts attaching unit to PTO case. Keep PTO case covered whilst unit is removed and when refitting unit refit the different length bolts in their original positions before firmly tightening Reconnect and adjust flexible cable, (see page 29).

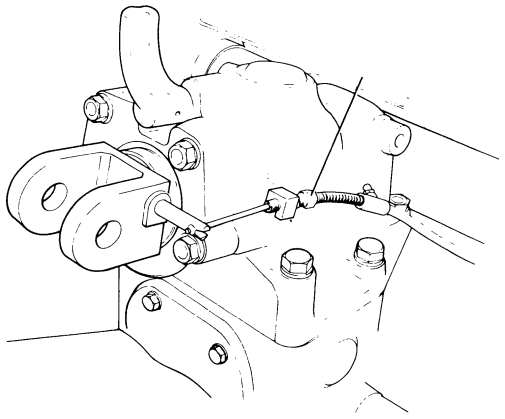

FIGURE 48
TOP LINK SENSING UNIT

Sensing unit flexible cable: To remove the flexible cable remove cover from right-hand ramshaft bracket and disconnect cable from actuating lever. The cable can then be pulled out of the bracket casting. On 9 Series tractors, the cable end is threaded and it is necessary to remove the two locknuts and nipple in order to withdraw the cable, but on 885 tractors the inner cable nipple cannot be removed and the clevis pin must be removed so that the nipple can be hooked out of fork end. Re-adjust new cable after fitting (see page 29).

Three-Way Take-Off Valve: Bolted on the front end of the ram cylinder, the three-way valve can be removed after first lowering the linkage and any equipment, such as a loader, which is connected to the three-way valve

Clean surrounding area before disconnecting take-off pipes from valve and feed pipe from distributor block. Remove the four bolts from valve body then lift valve from tractor

When replacing valve, ensure that cylinder and valve faces are clean and 'O' ring is seated in ram cylinder face recess. Tighten the four bolts evenly, so that the valve body is not distorted, then reconnect pipes

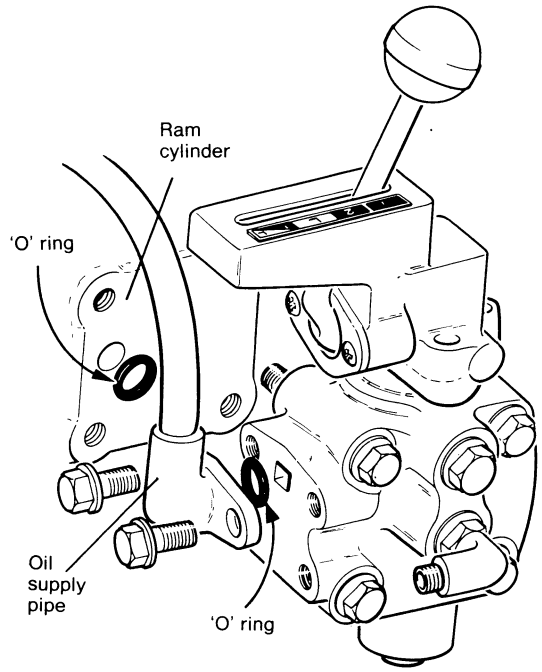

FIGURE 49 REMOVING THREE-WAY VALVE

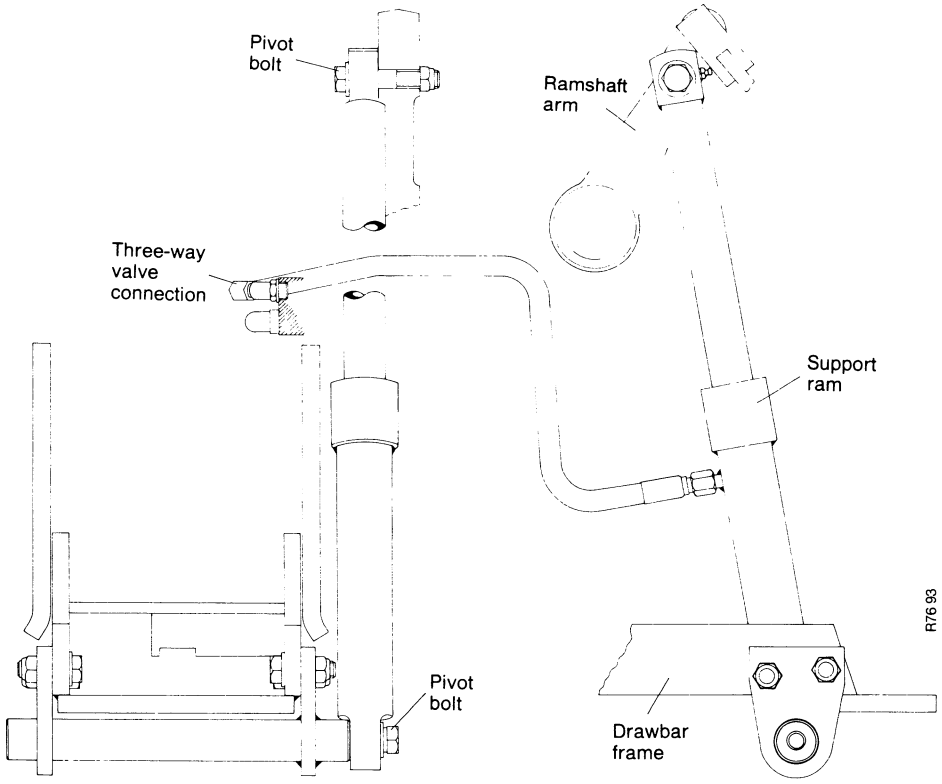

FIGURE 50 LINKAGE SUPPORT RAM

Linkage Support Ram: Mounted between ramshaft and right-hand side of drawbar frame, the ram can be removed by first lowering linkage, to ensure ram has minimum amount of oil in it, disconnecting oil pipe from ram then removing the upper and lower attachment bolts

When refitting ram, smear both bushes with grease and ensure the two pivot bolts are fully tightened.

Live Take-Off Valve: Bolted on top of right-hand side of rear axle case, the surrounding area should first be cleaned before valve is removed. Disconnect pipes and remove the five cover bolts then lift valves off axle case Note the different lengths of bolts so that they can be refitted in their original position

When replacing valves ensure that faces are clean and all 'O' rings are in position. Replace bolts and tighten evenly: the valve spools are a very close fit in their bores and only a slight distortion of body could cause spools to bind.

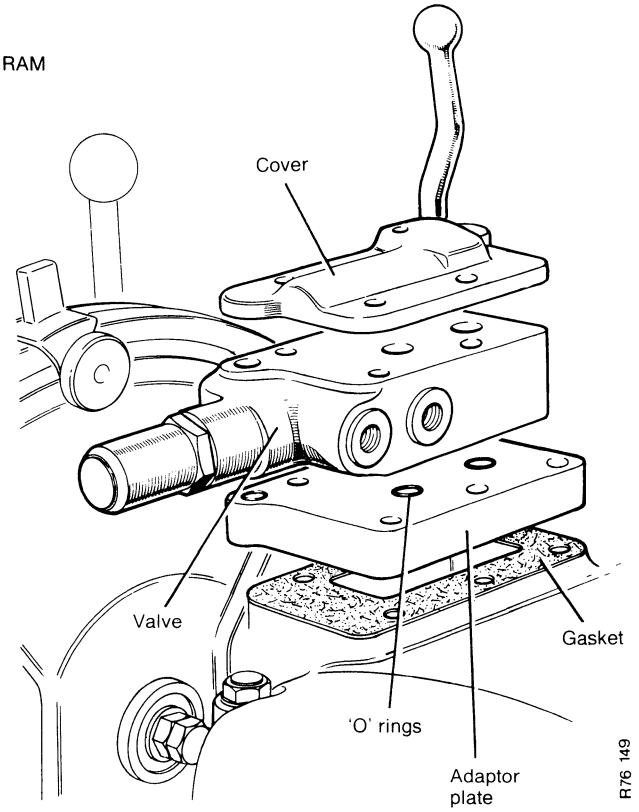

FIGURE 51
REMOVING LIVE TAKE-OFF VALVE

Ramshaft: This is removed complete with right-hand ramshaft bracket and control valve.

Remove cover from control lever housing. This is attached by four screws and must be removed complete with lowering control knob. Remove Nyloc nut from connecting link and remove the three bolts attaching housing to rear axle case: two of these are positioned inside the housing but the third is outside, and it will be necessary to release the three quadrant bolts to provide sufficient clearance to remove this bolt. Disconnect hand brake lever so that it can be removed with housing. Withdraw housing, noting that a distance piece and spring are fitted on connecting link

Release locknut on lubrication pipe clamp bolt and unscrew bolt approx. eight turns. Wire pipe to upper housing bolt hole, so that it will not come out of its connection at inner end and fall into axle case.

Disconnect flexible cable from sensing unit, then remove sensing unit Cover top of PTO case to prevent any dirt entering.

Removing control lever housing will expose the pressure pipe connection and enable the two attachment bolts to be removed, so that when control valve is withdrawn rearwards the pipe connection will remain in position.

Disconnect levelling and lift levers from lower links and remove cover from right-hand ramshaft bracket

Remove bolts attaching right-hand ramshaft bracket to axle case and left-hand cover to ram cylinder.

The cover joint is vertical and two of the cover bolts pass right through the axle case. When the cover is removed a small quantity (1 litre — 2 pints) of oil will be released.

Unscrew lowering control needle valve from front of control valve, to prevent it being damaged, then, whilst supporting the weight of the shaft with a portable crane, carefully withdraw the assembly rearwards until the control valve is clear of the axle case.

To separate ramshaft from its right-hand bracket, remove the two nuts attaching cam plate to ramshaft then slide bracket off shaft end.

Before commencing to replace the ramshaft, ensure that the lubrication pipe is in position inside the axle case and has not become detached at its left-hand (inner) end. Clean the joint faces and fit a new gasket on right-hand bracket

Fit the two small 'O' rings into their positions at front of control valve: a smear of grease will help to maintain rings in position whilst ramshaft is being refitted

Carefully raise ramshaft into position, guiding control valve into axle and ensuring that control lever rod passes through axle case. Place bearings in position on left-hand bracket then push shaft 'fully home'.

When shaft is in position, replace and tighten bracket bolts. Smear core plug with jointing compound before replacing it in left-hand bracket Remove retaining wire from lubrication pipe then position pipe and tighten clamp bolt Replace lowering control needle valve before bolting high pressure pipe connection to valve.

Refit control lever housing, using a new gasket. Spring and distance piece must be fitted on control valve rod as housing is replaced and an easy way of doing this is to place spring on rod, then temporarily fit a bolt through control lever pin so that distance piece can be held in position whilst it is pushed against spring. When housing is bolted in position replace second distance piece and set connecting link (see Adjustments).

Refit sensing unit, connect and adjust flexible cable, see page 29.

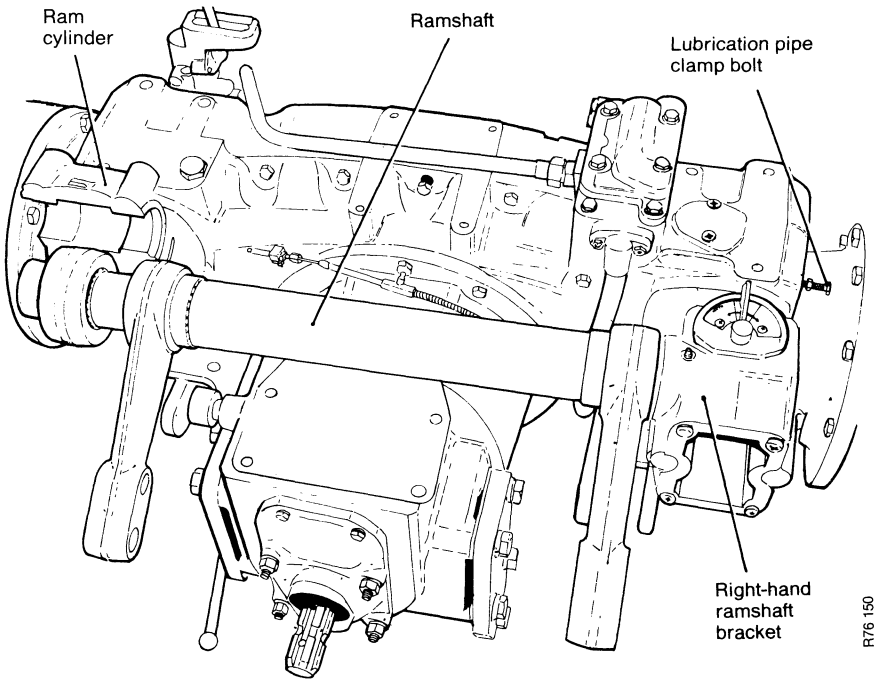

FIGURE 52 RAMSHAFT REMOVAL

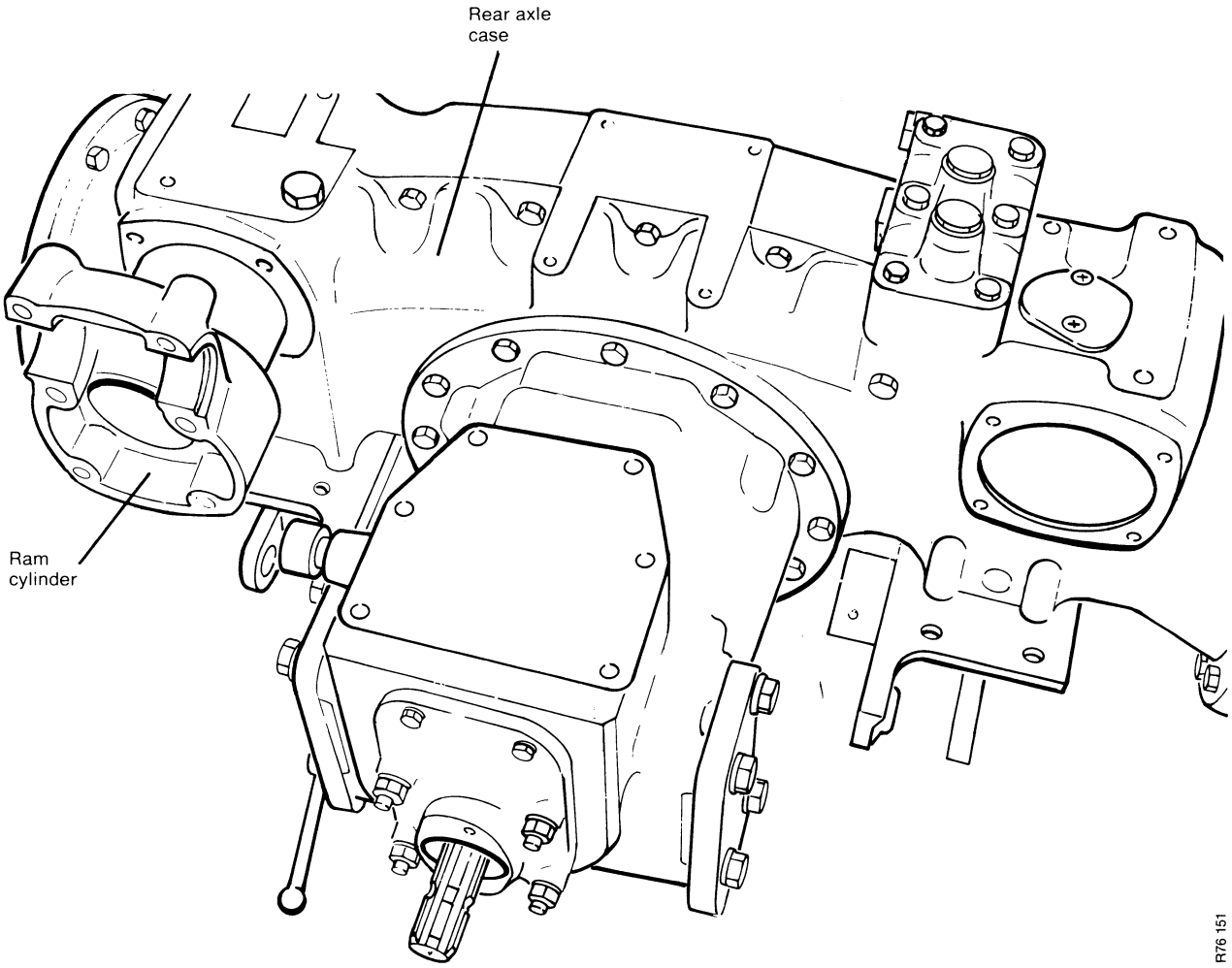

FIGURE 53
RAM CYLINDER REMOVAL

Ram Cylinder: Housed inside the left-hand side of the rear axle case the ram cylinder must be removed rearwards

The ram cylinder body is a one-piece casting and after removing the ramshaft assembly it is only necessary to remove the three-way take-off valve, or connector, from the front end of the cylinder to enable the cylinder to be withdrawn rearwards out of the axle case.

When refitting the ram cylinder, ensure that axle case is clean and the large 'O' ring is in position on front of cylinder. Coat both sides of a new gasket with non-hardening jointing compound before fitting gasket on axle case Smear cylinder 'O' ring with grease then slide cylinder into position and align bolt holes Refit ramshaft before replacing take-off valve.

Remove the three-way take-off valve from front end of ram cylinder. Disconnect clutch hand lever, remove lever pivot bolt then remove the lever side brackets from footplate. This will enable hand lever to be moved and provide sufficient clearance for removal of cylinder front-end cover.

When end cover has been removed, pull the cylinder flange forward to remove cylinder from axle case. The flange is a loose fit on cylinder but is usually tight enough to bring the sleeve with it when pulled forward.

Refit cylinder, complete with piston and flange, into axle case. Enter connecting link into cylinder and ensure that oil port through flange has an 'O' ring in it and is positioned opposite the hole in axle case. Refit end cover, tightening the bolts evenly until they are fully tight. Replace take-off valve and clutch hand lever

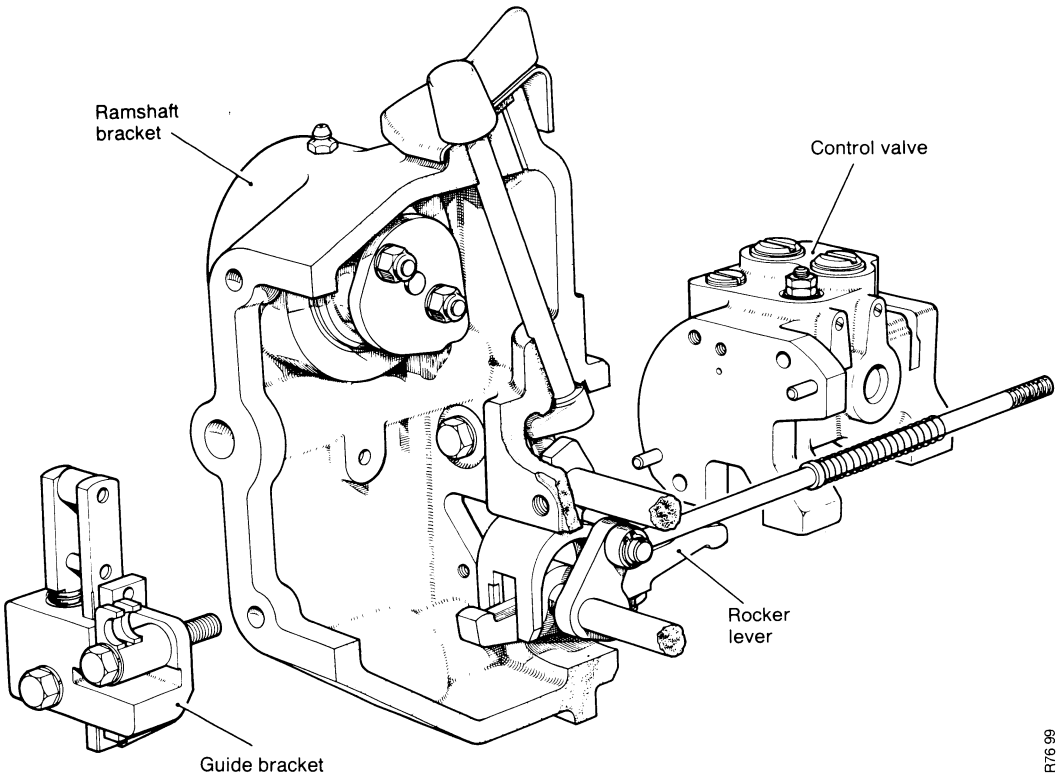

FIGURE 54 CONTROL VALVE AND RAMSHAFT BRACKET

Selectamatic Control Valve: As this valve is bolted to the front of the right-hand ramshaft bracket it is first necessary to remove the ramshaft and then remove the control valve from the ramshaft bracket

Having removed the right-hand ramshaft bracket, remove the guide bracket; this is attached by two bolts, one of which is also the pivot for the cable actuating lever Removing the guide bracket will expose a valve securing bolt and when this bolt and the two nuts are removed the valve assembly can be tapped off its dowels and separated from the ramshaft bracket.

When refitting a valve assembly, guide the rocker lever into position over abutment block whilst fitting valve onto dowels then replace bolt and nuts, tightening them evenly and firmly.

When valve is in position on bracket, check the settings of abutment block and TCU screw (see page 27).

Selector Dial Pointer Mechanism: Housed inside the right-hand ramshaft bracket this mechanism is accessible when bracket is removed.

After removing ramshaft (see page 37) and control valve, remove the two nuts attaching height control cam to ramshaft Then slide bracket off ramshaft. Remove cam from inside bracket.

When replacing ramshaft bracket, smear bush with grease and ensure 'O' ring is in position on ramshaft Replace bracket on ramshaft, lift arms towards rear of bracket, then refit cam. Replace flat washers, spring washers and nuts but do not fully tighten nuts· these can be tightened when assembly is completed and cam position has been set, (see Adjustments).

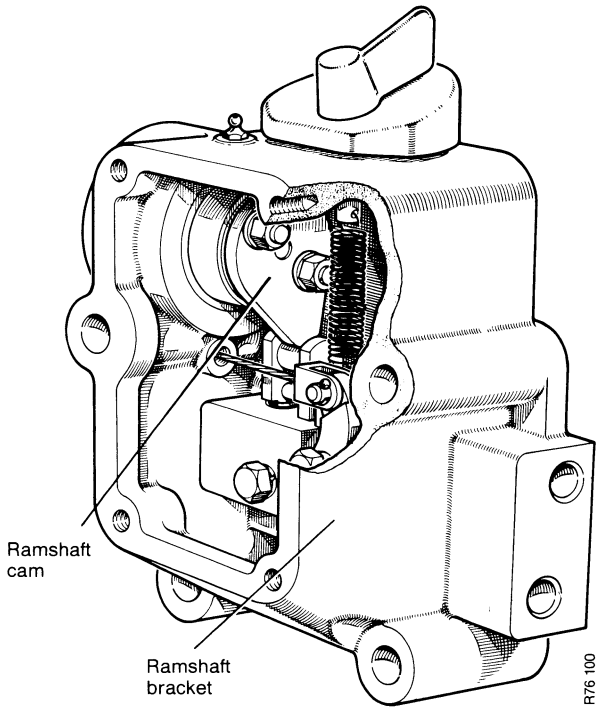

FIGURE 55
RIGHT-HAND RAMSHAFT BRACKET

Recommended Lubricants

The hydraulic system and transmission utilise a common oil reservoir and it is therefore essential to use a fluid (lubricant) suitable for both applications.

The following lubricants are approved for use in the transmission/ hydraulic system but if none of these are available refer to the notes on alternative lubricants

The oil reservoir should be drained and refilled with new lubricant every 1000 hours.

Alternative Hydraulic/Transmission Lubricants

It is emphasised that to safeguard the performance and reliability of the tractor, only the approved lubricants listed should be used

It is particularly important that EP or ATF oils are not used in the transmission/hydraulic reservoir If the recommended multi-grade oil is not available, a straight mineral gear oil of SAE 80 viscosity should be used: do not use SAE 80 EP extreme pressure or mild EP SAE 80 oils sold for car gearboxes, or automatic transmission fluid.

Extreme pressure transmission lubricants

These lubricants are intended for use in hypoid rear axles. Extreme pressure additives are not normally formulated for use in hydraulic systems and may be subject to breakdown resulting in corrosion of non-ferrous parts and gum formation In addition these oils reduce sliding friction, excessive slip could therefore occur on the Hydra-Shift clutch plates and brake bands, resulting in excessive heat and wear.

Automatic Transmission Fluids

These are light viscosity fluids formulated for use in torque convertors and automatic transmissions They are not able to withstand the loads occurring in tractor transmissions. A number of oil companies are developing similar fluids for tractor use, which may be an advantage in arctic conditions and are necessary to prevent filter restriction on tractors fitted with a tandem hydraulic pump. Before using any of these fluids it is essential to contact your David Brown Distributor — who will obtain further advice from Service Department, Meltham

Approved Lubricants

(except in arctic conditions)

United Kingdom

BP Tractor Oil Universal

Agricastrol Multi-use or MP

Esso Tractor Universal or Unifarm

Mobil Mobiland Universal

Shell Tractor Oil Universal

Duckhams Farm Master

Total Super Universal Tractor Oil

North America

Case TFD

Except U.K. and North America

Amoco HD-M Motor Oil 20W/30

BP Tractor Oil Universal
or BP Vanellus M20-50

Agricastrol Multi-use 20W/30

Esso Tractorlube Universal 20W/30
or Unifarm

Mobiland Special 20W/40

Shell Rotella SX Oil 20W/40

(under arctic conditions)

North America only

Case TFD

Worldwide except North America

Amoco 303 fluid

BP Tractran 9

Agricastrol MD

Esso Torque Fluid 56

Mobil Tractor Fluid 303

Shell 6332

In some countries the approved lubricants may be marketed under different designations from those listed above: if any doubt exists, consult your David Brown Distributor.

Full flow Filter: The only maintenance required is the fitting of a new paper element every 500 hours, or if the warning lamp is illuminated at engine speeds above 1800 rev/min when oil is warm Paper elements must not be cleaned and new elements must be handled very carefully Elements are easily damaged when dry and a damaged element is useless. Except for cleaning the screen and magnetic filter, no attempt should be made to strip the screen filter The by-pass valve cannot be adjusted and if faulty operation is suspected a new unit should be fitted Ensure that the screen is transferred from the old to the new element

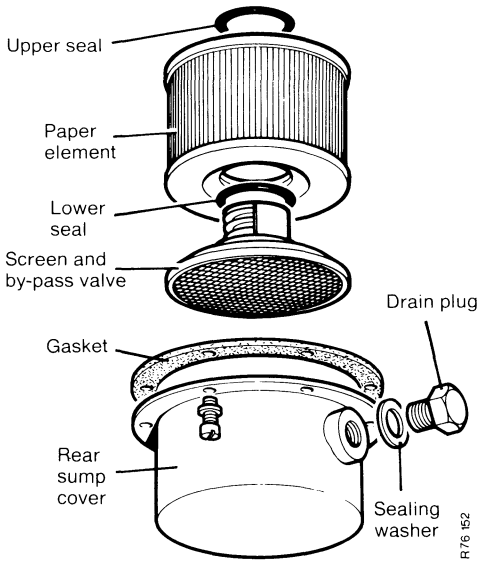

FIGURE 56
COMPONENTS OF FULL FLOW FILTER

Hydraulic Pump: The most important item of pump maintenance is keeping the transmission oil clean. If the transmission oil is allowed to be contaminated with dirt, or water, premature pump wear will take place.

To dismantle a **Plessey** pump for examination:

1. Prepare a clean workbench where components can be laid out in order of removal

2. Scribe marks on the mounting flange, body and end cover to aid correct re-assembly. Remove gear with suitable puller. Do not hammer shaft to facilitate removal.

3. Remove the nuts and washers from the mounting flange and lift flange off dowel bolts. Tap the flange with a mallet if hard to remove — do not attempt to separate by using a screwdriver.

4. Withdraw gears and bearings from body, carefully noting their positions To facilitate correct reassembly mark bearings with a felt tipped pen. Do not use a metal tool for marking.

5. Remove through bolts and end cover Remove 'O' rings from cover and flange. Unscrew blanking plug and 'O' ring

Inspection and Rectification: Pump body should be examined for wear or damage It is normal for the gears to cut a light track on inlet side of the body bores If bores are in good condition without excessive scoring the body is serviceable. The only rectification required is to remove any burrs from the edges of the rotor track, so that it cannot interfere with the balancing action of the bearings. Very carefully remove any burrs with a sharp scraper or fine emery cloth. If the rotors have worn a deep groove in the body bores, due to worn bearings allowing the rotors to be pushed towards inlet side of pump, the pump should be scrapped Fitting new bearings in a worn body will hold rotors clear of the wear tracks and allow internal oil leakage to occur, resulting in loss of pump output.

Ensure that bearings are not damaged or embedded with particles of foreign matter. Examine each bearing for wear on the face and in the bores If necessary lightly polish the outer diameters of bearings to obtain free movement in body

If bearing faces are not excessively worn they may be salvaged by polishing Place a sheet of 'O' grade emery paper on a truly flat surface, lubricate with paraffin and polish bearing surface using a light rotary motion. Bearing thickness must not vary by more than 0·005mm (0 0002in).

The bearings must not be worn sufficiently to prevent the sealing rings from being compressed when body bolts are tightened Temporarily assemble rotors and bearings then measure distance between outer faces of bearings: this should be 0·076mm to 0 178mm (0·003 to 0 007in) less than width of body

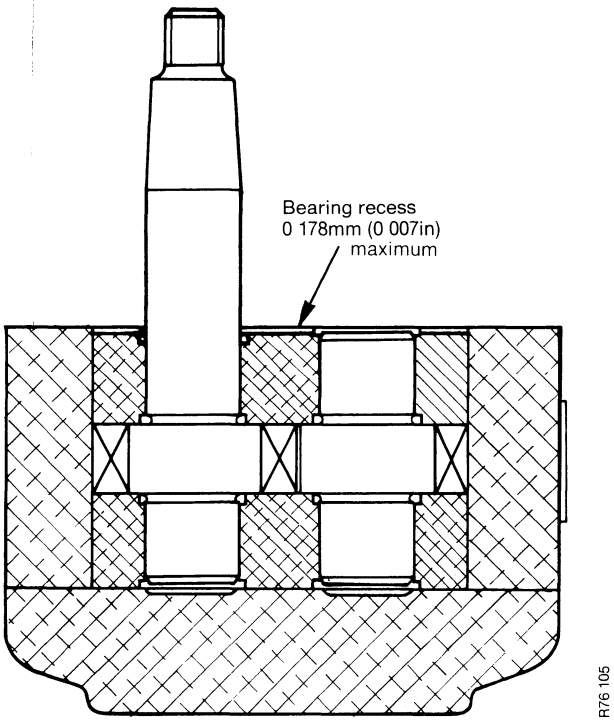

FIGURE 57 CHECKING BEARING WEAR

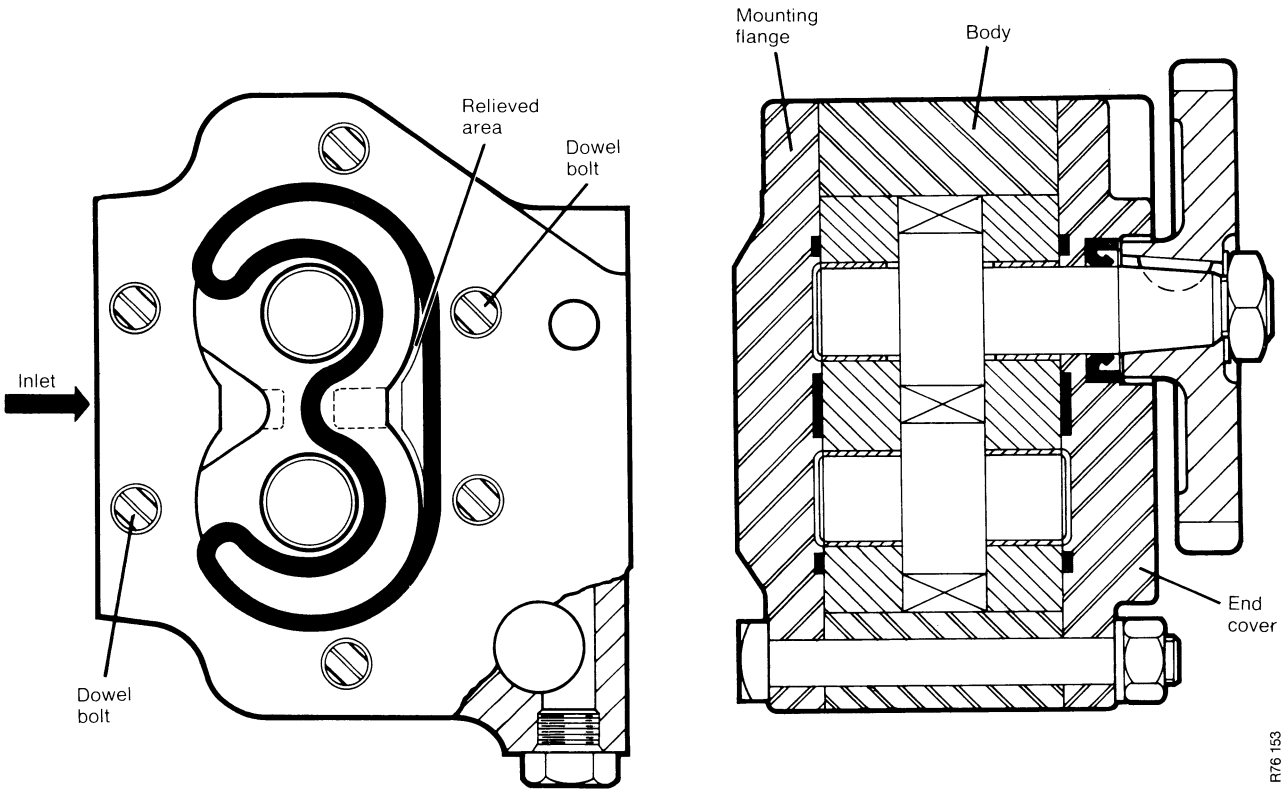

FIGURE 58 PLESSEY PUMP BEARINGS AND SEALS

Rotors should be inspected for worn, or scored, side faces and journals, damaged teeth or surface cracks Slight wear or scoring on journals can be erased by mounting rotor between lathe centres and polishing with 'O' grade emery cloth lubricated with paraffin Only polish the journal surfaces, do not reduce their diameters: for satisfactory pump performance the journal diameters must be paired within 0·013mm (0·0005in) and gear widths paired within 0·005mm (0 0002in)

Re-assembling Pump: Carry out re-assembly on a clean workbench. Wash all components in paraffin or fuel oil and thoroughly dry with an air blast. Cleaning solvents likely to attack the synthetic rubber seals must not be used. All machined surfaces should be free from burrs and bruise marks Ensure that bearing lubrication scrolls are clean and free from damage. Bearings have two features which facilitate their correct re-location; a Y-shaped recess on the suction (inlet) side and relieved area on pressure (outlet) side.

1. Grease and fit new shaft seal into the end cover (seal spring facing outwards).
2. Fit new 'O' rings into the mounting flange and end cover grooves
3 Assemble cover to body with the two dowel bolts.
4. Place pump on bench, cover end down and inlet side towards you.
5 Lubricate the bores and faces of bearings with clean transmission oil.
6. Fit the cover end bearing into body and slide gently to base of bores.
7. Insert the gears into their respective bores (with inlet side towards you the drive gear is on the right).
8. Place the top bearing over gear shafts and into location against gear faces
9 Mount the flange over the drive gear (taking care not to damage the shaft seal on the keyway) and dowel bolts
10. Insert remaining through bolts, spring washers and nuts. (Lubricate threads with thin oil before fitting)
11. Tighten nuts down evenly and apply recommended torque loading of 5 53 to 6 22kg metres (40/45lb ft.).
12. Refit blanking plug, using new 'O' ring (If pump is not being refitted immediately, seal all parts with plugs or adhesive tape.)
13 Fit the drive shaft key in position and gently ease the gear onto the shaft. Ensure that keyway is aligned with key and use the shaft nut to pull gear onto shaft taper.
14 Fit new tabwasher, tighten shaft nut to 5·53kg metres (40lb ft) and lock the nut. Do not hammer or press the gear into position otherwise bearing damage will result.

Unserviceable Parts: Should the pump be worn beyond salvageable limits, satisfactory repair becomes uneconomical and it will be necessary to fit a new unit. Always clean out the hydraulic system before fitting a new pump Worn components can be renewed but the following points should be noted.

1. New components in a worn body may not restore full efficiency because of internal losses.
2. New bearings will tend to prevent the gears bottoming in their tracks, thereby increasing internal losses.

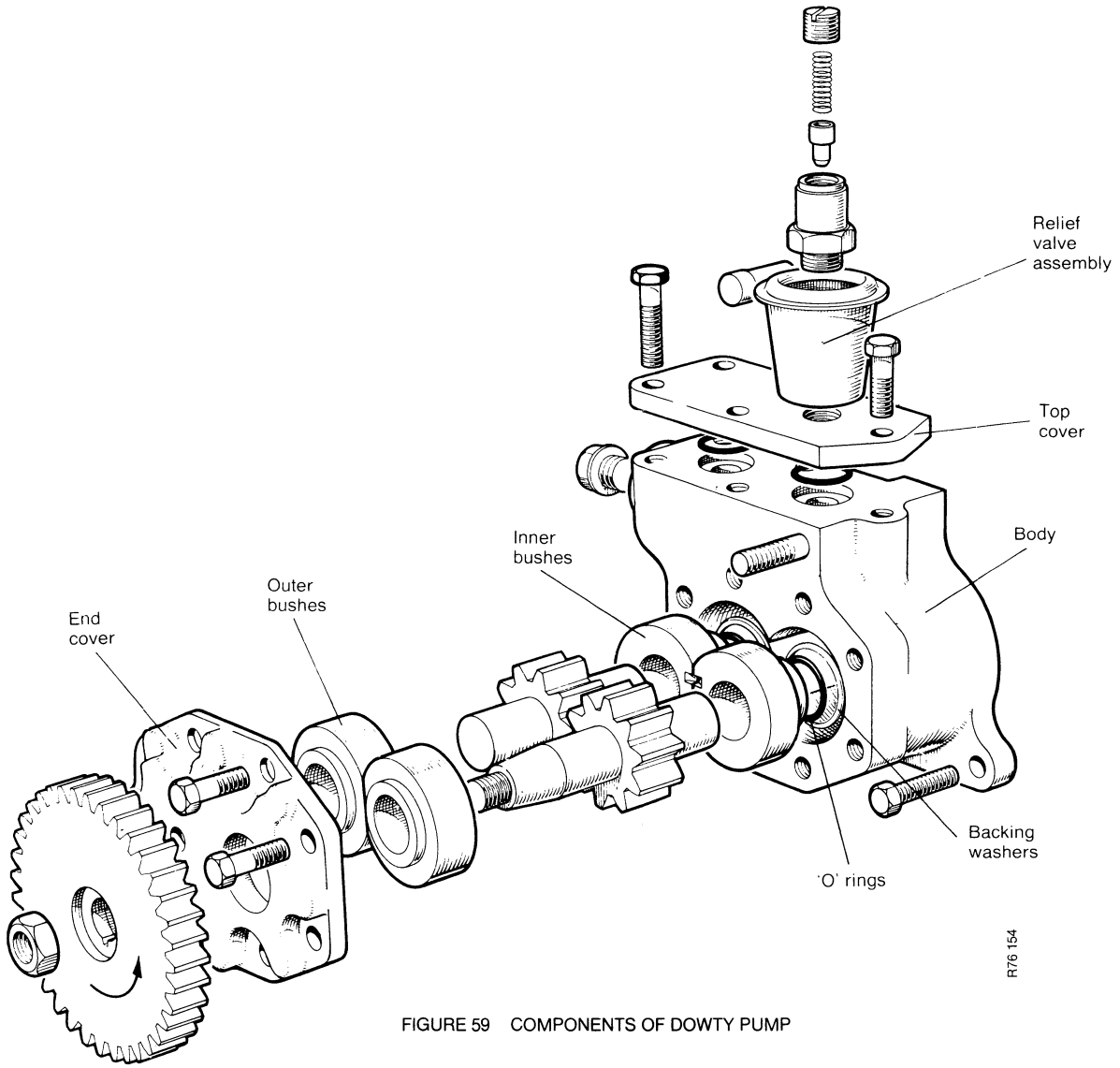

FIGURE 59 COMPONENTS OF DOWTY PUMP

To dismantle a **Dowty** pump for examination:

1. Remove shaft nut and draw gear off taper using suitable puller. Do not hammer shaft.

2. Remove top cover and relief valve complete. Note position of different length bolts to ensure correct re-assembly

3 Remove end cover and extract rotors and bushes from body. These should slide out freely but if tight, invert body and tap it on a wooden block. Note location of bushes to ensure that they are refitted in their original positions upon re-assembly

4. Discard all 'O' rings

5. Clean all parts and lay them out on a clean bench. If more than one pump is being dismantled, take care not to interchange components

Inspection and Rectification: Pump body should be examined for wear or damage. It is normal for the rotors to cut a light track on the inlet side of pump body but if wear of the bushes, or journals, has allowed the rotors to form a deep wear track the pump should be scrapped. It is no use fitting new bushes into a body with deep wear track as the increased rotor tip clearance will allow increased internal oil leakage.

If the wear track is not deep but the rotor tips have raised a burr at the sides of the track the burr should be carefully polished out, otherwise it may prevent the bushes being held against the rotor side faces and allow internal oil leakage

Erosion of the pump body may occur due to oil cavitation, caused by operating the pump with a restriction in the pump oil supply or an air leak on the inlet side of pump. If this occurs the pump output and pressure will be affected.

Examine the bush bores for signs of wear and the bush faces adjacent to the rotor teeth for scoring or pitting. Slight scoring of the bush faces is acceptable provided the pump operates satisfactorily at full pressure

The bushes are paired so that lengths of the major diameters are equal to within 0 005mm (0·0002in), and can only be renewed in pairs. A set of four new bushes should be modified by chamfering the edge on the low pressure side as shown (Fig. 60). This will allow the bushes to override any burrs and thus prevent any interference with the balancing action of the bushes.

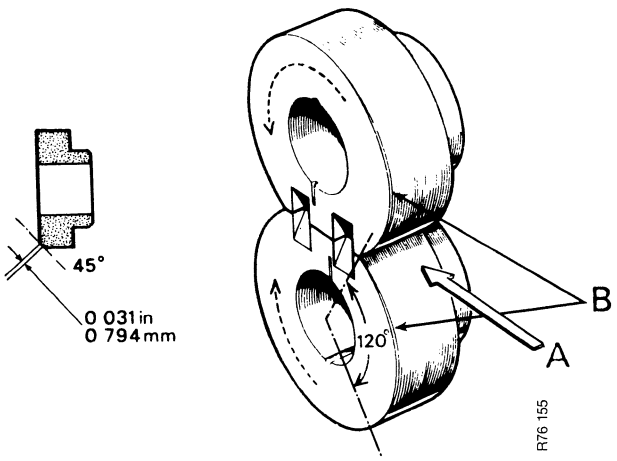

FIGURE 60 CHAMFERING THE INNER ROTOR BUSHES

A Inlet
B Chamfers tapering to zero at 120°

Apply a small quantity of clean oil into the pump body and fit the two bushes into their respective bores. The bushes should slide into position quite freely until the 'O' rings come up against the body shoulder Apply clean oil to rotor journals and assemble rotors to pump body. Fit outer bushes in their original positions and place body end cover in position to check the cover to body clearance. With the cover resting on the bushes, the clearance between the cover and the body should be not less than 0·38mm (0·015in) otherwise the 'O' rings will be unable to make a seal and pump will be incapable of producing full pressure.

Once the internal condition of the pump has been assessed, it may be considered more economical to fit a new unit than replace worn components.

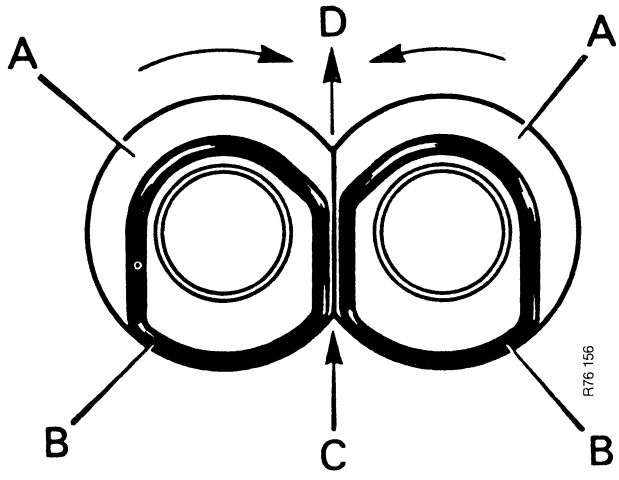

FIGURE 61 ROTOR BUSHES (later type pump only)

A Bushes
B 'O' rings
C Inlet
D Outlet

Re-assembling Dowty Pump: Prepare a clean work bench, wash all components in cleaning solvent or clean hydraulic oil. Cleaning solvents likely to attack the synthetic rubber seals must not be used.

1. Apply a small quantity of clean oil to pump bore, bushes. rotors and new 'O' rings. Assemble inner bushes, 'O' rings and backing washers into pump bores and insert rotors.

Note: On later pumps (Fig. 61), the bush tails are not concentric with the bores. This gives a more uniform pressure balancing action and it is essential that bushes are correctly located as shown. Where backing washers are fitted, fit 'O' rings before backing washers.

2. Fit outer bushes and end covers. Replace cover bolts noting that two bolts are shorter where cover section is thinnest.

3. Tighten down the cover bolts evenly and by diagonal selection (to prevent distortion) to 5·53kg metres (40lb ft). Do not overtighten the bolts as the body is of soft alloy.

4. Replace the shaft key and gear followed by the lockwasher and nut. Do not tap the gear on to the shaft or the bushes will be damaged. Use the shaft nut to pull the gear into position after checking that key and keyway are aligned. Tighten the shaft nut to 6·22kg metres (45lb ft) then lock with tabwasher.

5. Check that the pump can be turned by hand: the rotors should have a constant drag without roughness or tight spots.

6 Refit top cover, fitting new O' rings and noting that the two longer bolts are fitted adjacent to the body plug. Tighten the bolts to 3·5kg metres (25lb ft) and refit the relief valve, noting that a sealing washer should be fitted on each side of the shroud.

7. If the pump is not for immediate use, seal the ports to prevent dirt entering the pump

Selectamatic Control Valve: As the main valve plungers are match-ground to their bores they cannot be replaced The valve assembly can, however, be stripped, cleaned and re-assembled and as faulty operation is probably due to sticking caused by dirt, a valve should not be regarded as unserviceable unless it is found faulty during this examination

Dismantling the control valve:

Prepare a clean workbench, where components can be laid out and not mixed with components from any other valves being dismantled

1. Remove the abutment plate, taking care of the shims
2. Remove the two locknuts from the spool valve and withdraw the spool. Do not attempt to remove the spool valve sleeve as this must not be replaced without special equipment to check that it is correctly sealed
3. Remove hold valve from top of valve and lift out the spring, then turn valve upside down so that hold valve plunger falls out: the small steel ball inside hold valve plunger will also fall out. If plunger does not fall out, insert a piece of 12mm ($\frac{1}{2}$in) diameter wood, or plastic, dowel into plunger so that it can be pulled out Repeat procedure to remove by-pass valve assembly, ensuring that valve parts are not interchanged
4. Remove relief valve plug and extract the spring, plunger, shims, seat and restrictor washer, taking care of the shims as these must be refitted as removed in order to maintain the original pressure setting.
5. Remove the two plugs from left-hand side of body and extract the non-return and lowering control plungers
6. Remove plug from front of body and extract latching valve
7. Finally unscrew ferrule from underneath valve and allow TCU plunger, spring and ball to fall out

The valve is now dismantled as the remaining plugs and seats should not be disturbed.

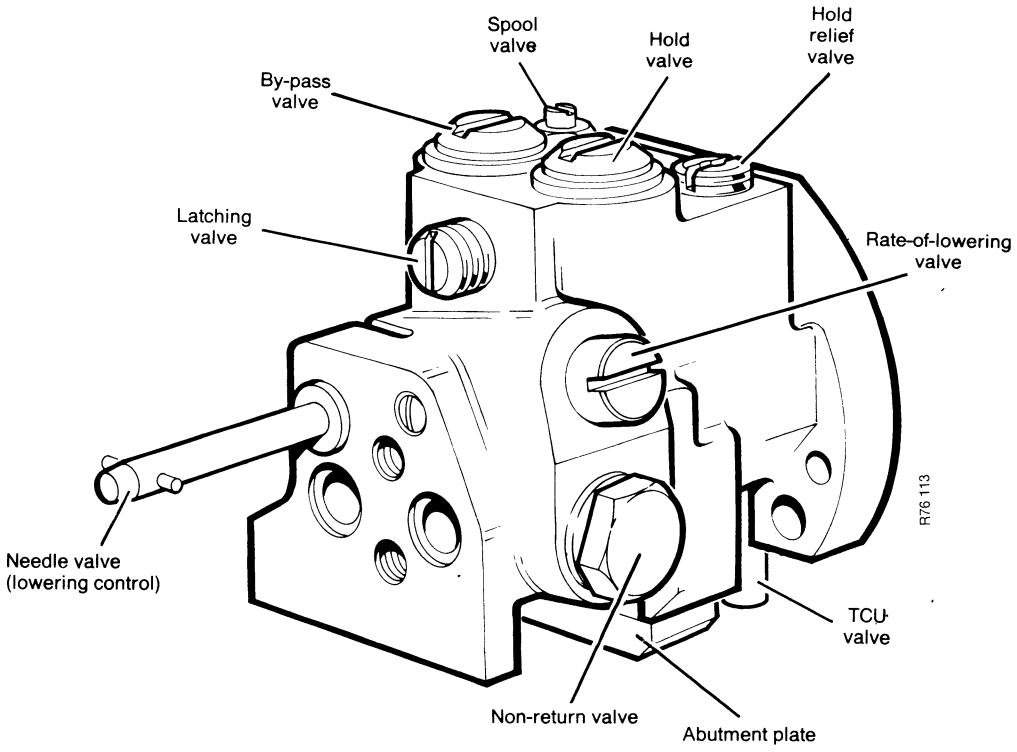

FIGURE 62 SELECTAMATIC CONTROL VALVE ASSEMBLY

Inspection and Rectification: Wash all components in paraffin (do not use a cleaning solvent likely to attack the synthetic rubber seals) and dry with an air blast. Do not use cloths as fibres may be left and cause trouble later. If by-pass plunger does not have a metering pin it will incorporate a small screen filter and this must be cleaned. Do not attempt to remove the filter but remove the small plug and restrictor washer from inside plunger then use an air jet to blow downwards, i.e. from inside to outside of plunger, so that any dirt on outside of filter will be blown away and not forced through filter screen. When filter is clear replace restrictor washer, ensuring that this is also clear, then replace and tighten plug. Check that the by-pass and hold plungers are free to slide and rotate with light finger pressure If there are any signs of sticking the plungers may be lapped in with metal polish or jeweller's rouge mixed to a paste with paraffin or light oil, **Grinding paste must not be used for lapping-in the plungers.** If the plungers or bores, are scored or any of the seal faces worn, the valve is unserviceable and should be replaced with a new assembly as plungers are not supplied separately

Assembling the control valve: After thoroughly cleaning the valve chest, taking special care to remove all traces of lapping compound, lay all components on a sheet of clean paper

1 Fit thrust spring on lower end of spool valve, smear valve with clean oil then refit in its bore Push spool against spring, fit flat washer and screw the two locknuts in position with fingers: they will be adjusted later

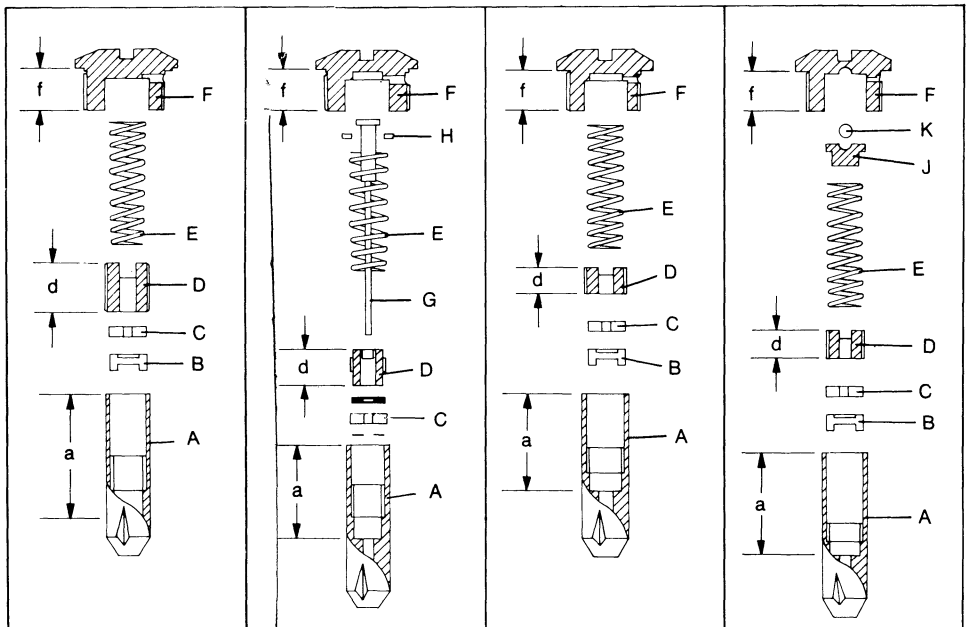

CONTROL VALVE ASSEMBLY	K915356 (S2)	K944678 (S3)	K947765 (S4 vertical grooves)	K947765 (S4 inclined grooves)
A By-pass plunger	Type 1	Type 2	Type 2	Type 3
a Recess depth	31 75mm (1 25in)	25 4mm (1 00in)	25 4mm (1 00in)	25 4mm (1 00in)
B Nylon filter	K921154	—	K921154	K921154
C Restrictor washer	K913621	K944289	K913621	K913621
c Hole diameter	0 51mm (0 020in)	1 75mm (0 069in)	0 51mm (0 020in)	0 51mm (0 020in)
Gasket — restrictor	—	K943899	—	—
D Screwed plug	K919634	K943901	K947759	K947759
d Length of plug	11 81mm (0 465in)	9 02mm (0 355in)	5 71mm (0 225in)	5 71mm (0 225in)
E Spring	K24832	K24832	K24832	K24832
F Flanged plug	K913242 (use K942892)	K942892	K942892	K948067
f Recess depth	8 7mm ($\frac{11}{32}$in)	7 9mm ($\frac{5}{16}$in)	7 9mm ($\frac{5}{16}$ in)	10 3mm ($\frac{13}{32}$ in)
G Metering pin	—	K944290	—	—
H Guide washer — pin	—	K626917	—	—
J Ball retainer	—	—	—	K947977
K Steel ball	—	—	—	K11548

FIGURE 63 IDENTIFICATION OF BY-PASS VALVE PLUNGERS

2. Smear by-pass and hold valve plungers with oil before placing them in their respective bores. Place the small steel ball inside hold plunger followed by ball retainer, then replace springs, sealing washers and plugs. Ensure sealing washers are in good condition and plugs are fully tightened.

3. Lightly oil latching valve plunger before fitting it in its bore. Replace spring and screw plunger tightly into position.

4. After lightly coating non-return valve plunger with clean oil, place plunger in its bore then replace spring and plug Firmly tighten plug

5 Place restrictor washer in relief valve port and place seat on top of washer Refit shims, plunger, spring and cap, ensuring that shims are replaced exactly as removed so that the original pressure setting is maintained. If the relief valve plunger or seat are not in good condition a new relief valve assembly should be fitted. This assembly is supplied complete with the shims required to give the correct valve opening pressure and must be fitted complete, otherwise an incorrect pressure setting will be obtained.

6 Turn valve over, so that TCU valve port is towards top, then place steel ball in port followed by spring and plunger Screw ferrule loosely into valve to hold plunger in position

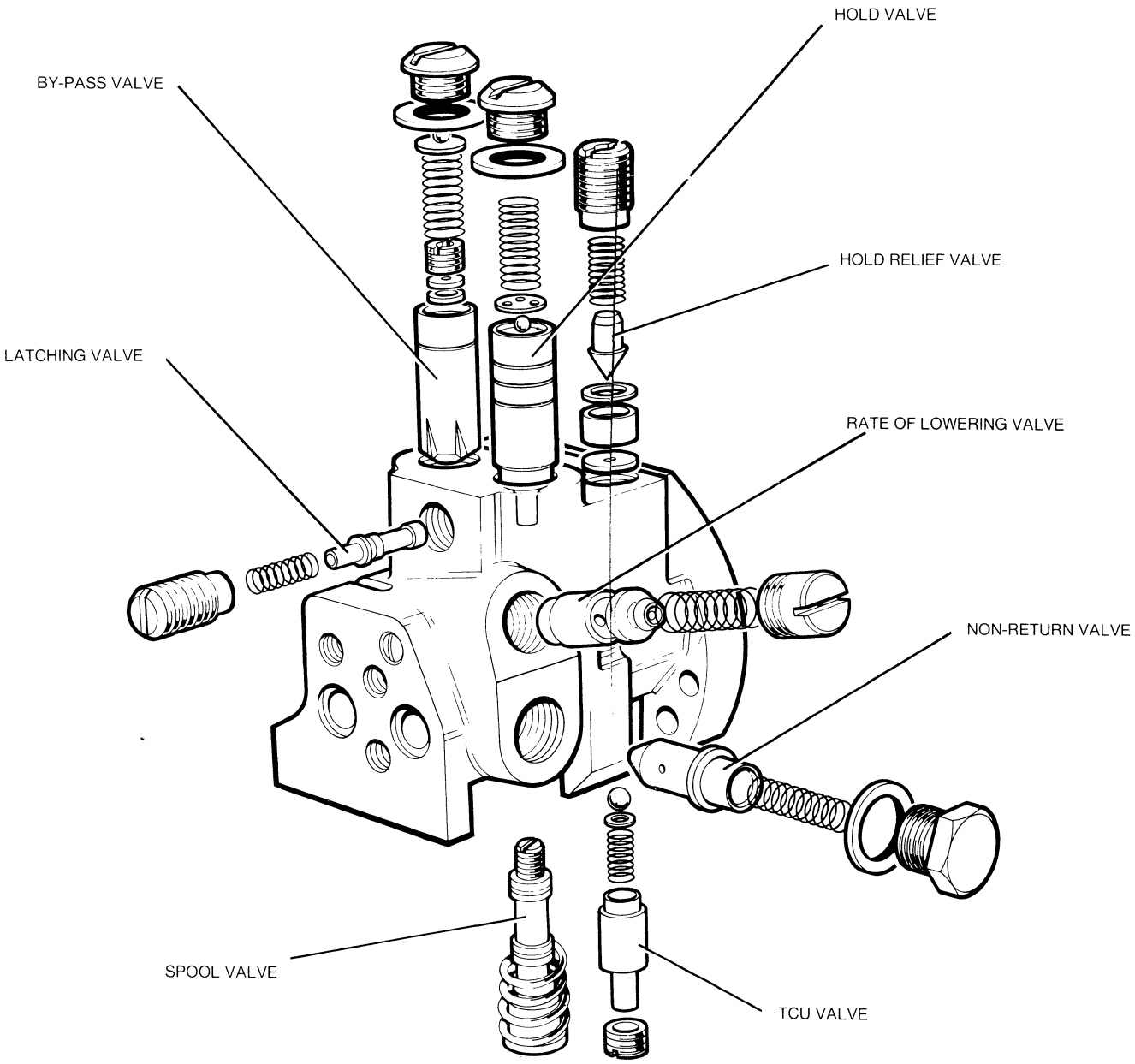

FIGURE 64 COMPONENTS OF SELECTAMATIC CONTROL VALVE

Setting valve after assembling: After assembling the control valve it is necessary to set the TCU valve ferrule and the spool valve locknuts in their correct positions All TCU valves are set to the same amount of travel but each spool valve requires an individual setting. This setting is determined during manufacture and is then etched on the spool so that if subsequently disturbed the original setting can be restored

1. Hold valve assembly in a vice, positioned so that spool is horizontal and mount a dial gauge so that when spool is pushed inwards against its spring the amount of spool movement is shown on gauge. Ensure that the gauge is mounted directly in line with spool and makes firm contact with ground face on spool.

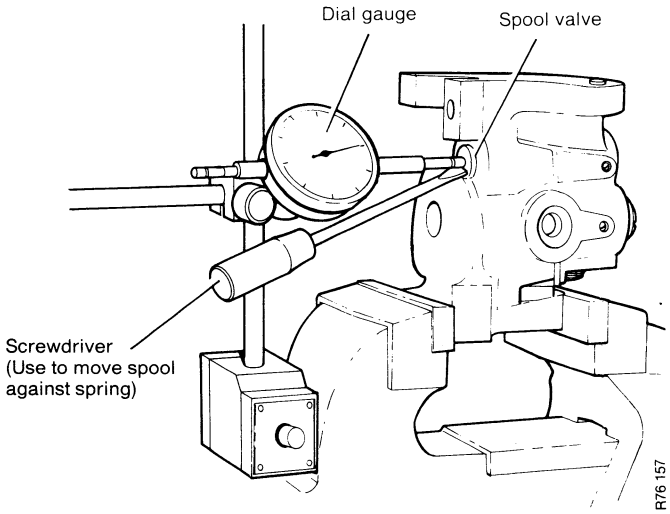

FIGURE 65
SETTING THE SPOOL VALVE

2. Push spool fully inwards so that spool spring is fully compressed and hold in this position whilst setting gauge to zero.

3 Slowly release spool and observe gauge reading If gauge reading is greater than the dimension etched on end of spool the spool has too much travel and the locknuts require tightening If the reading is less then the setting dimension the locknuts require unscrewing to give the spool more movement. After adjusting the locknuts to bring the gauge reading to the setting dimension etched on spool, lock the nuts by tightening them against each other

4. When the locknuts have been tightened make a final check by holding spool fully inwards, setting dial to zero and then slowly releasing spool. If gauge reading is more than +0·025mm (0·001in) from the setting dimension etched on spool re-adjust locknuts then re-check spool travel. When the gauge reading is not more than +0·025mm (0·001in) from dimension etched on spool the setting is satisfactory. A minus spool setting is not acceptable.

5. Turn valve assembly over, so that TCU valve is towards the top and screw ferrule inwards until valve plunger lift almost disappears then **unscrew** ferrule two-thirds of a turn

6. Mount gauge vertically over TCU valve plunger and, using a pair of tweezers or thin-nosed pliers, lift plunger upwards until it comes against ferrule then set gauge to zero. Release plunger and observe the gauge reading: this should be 0·86 – 1·00mm (0·034 – 0·040in) and if not within this limit adjust by turning the ferrule slightly. Tighten ferrule to reduce plunger movement and unscrew ferrule to increase plunger movement.

7 When plunger movement has been checked and found correct, remove dial gauge and secure ferrule by peening valve body against ferrule threads with a centre punch The control valve is now ready and should be placed in a clean bag, to protect it from dirt, until it is required for fitting to the ramshaft bracket

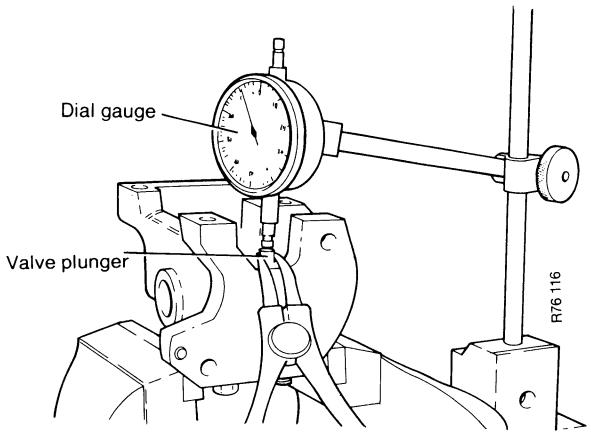

FIGURE 66
SETTING THE TCU VALVE

Dump Valve: No maintenance or adjustment is required and the only reason for dismantling the dump valve is to renew the oil seals. If oil leaks from spindle, strip valve as follows:

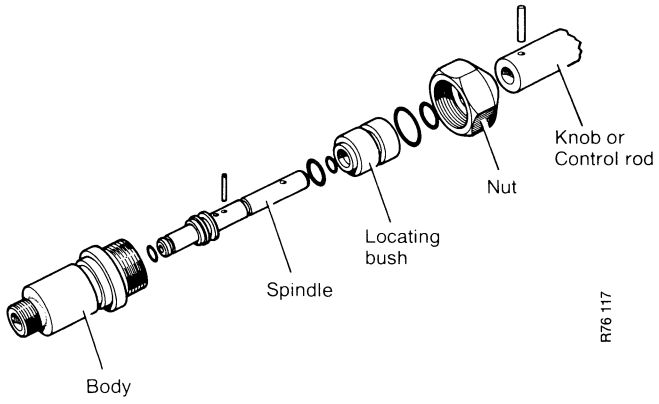

FIGURE 67
DUMP VALVE

Carefully grip body in a vice, unscrew the special nut then pull knob to remove spindle and locating bush. Remove pin attaching knob to spindle, taking care not to bend spindle, then pull knob from spindle and remove locating bush Remove the 'O' rings and clean the parts Fit a new small 'O' ring in spindle groove, smear with grease then replace locating bush. Fit a new 'O' ring on outside of bush and a new sealing ring on top of bush Fit nut on top of sealing ring then fit knob and carefully replace pin Fit second small 'O' ring on lower end of spindle and larger 'O' ring further up, smear these with grease then fit spindle assembly into body Screw nut tightly on to body, check that knob can be operated correctly then fit a new 'O' ring on outside of body.

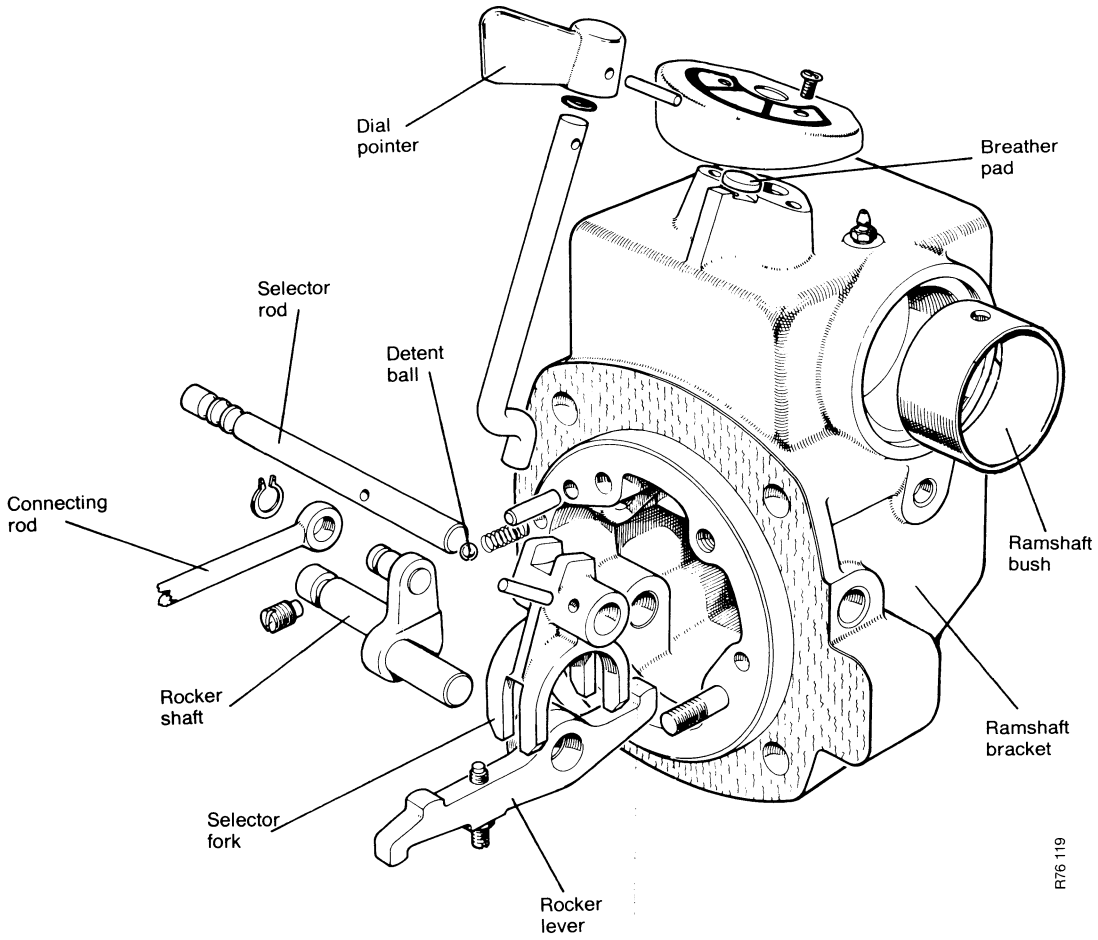

FIGURE 68 DIAL POINTER MECHANISM

Selector Dial Pointer Mechanism: Not requiring any adjustment or maintenance this mechanism need only be disturbed if wear, or damage causes malfunctioning

1 Drive spring pin from selector fork, taking care not to bend shaft

2 Remove plug from left-hand side of bracket early tractors have a core plug here, which can be removed by driving a small punch into centre of plug then levering out Using a small drift through plug hole, drive selector shaft out until it will allow fork to be removed After removing fork, push 'selector rod out of bracket, noting that a detent ball and spring are located under the rod and will be displaced when rod is finally withdrawn When shaft has been removed extract spring from its hole by inverting bracket and allowing spring to fall out, or hooking spring out with a piece of bent wire.

3 Remove rocker shaft locating screw, this is on front face of bracket and may be covered if gasket is still adhering to face Slide rocker arm off shaft then turn shaft until arm pin is towards centre of bracket and remove by sliding shaft sideways into bracket It is not necessary to remove core plug sealing rocker shaft hole in the side of bracket

4. Remove spring pin from dial pointer and pull pointer off its shaft Shaft can then be withdrawn downwards out of bracket Remove the two screws holding indicator panel on top of bracket, lift off panel, remove breather pad and 'O' ring

5. Ramshaft bush need not be removed unless it is to be renewed but if worn can be removed by driving it inwards into bracket.

Assembly Selector Mechanism

1. After cleaning all components, commence assembly by fitting a new ramshaft bearing bush. Press bush carefully into bracket, positioning hole through bush in iine with grease nipple and split in bush towards rear axle case side of bracket

2 Replace spring anchor, breather pad and 'O' ring in their positions on top of bracket then replace indicator panel Smear selector rod with oil before fitting it into position. Turn rod so that crank is pointing inwards into bracket then fit dial pointer and secure with spring pin After fitting pin, check that dial pointer can be turned quite freely.

3 Smear rocker shaft with oil then slide it into position, turning shaft so that crank clears inside of bracket. Fit rocker lever on to shaft, longer end of lever outward and flange on bush towards rocker shaft, then fit locating screw to retain shaft in position. Fit a new core plug to seal rocker shaft hole in outside of bracket if original plug has been removed

4 Place detent spring in hole in face of bracket and place detent ball on top of spring. Smear selector shaft with oil and push plain end of shaft into right-hand side of case until it touches detent ball. Using a small punch to hold ball against its spring, push shaft until it rides over ball and allows punch to be removed. Fit selector fork over rocker lever and engage selector shaft into fork so that when fork is held stationary and the shaft pushed inwards it is pushed through fork Align shaft and fork pin holes then replace pin Turn dial pointer to each of the three positions, to check that it operates freely then replace plug in left-hand side. This plug is a stop for the selector shaft and should be smeared with Loctite before screwing into case. Turn dial pointer to TCU/EXT position and tightening plug until it just contacts selector shaft then unscrew it quarter-of-a-turn and lock by peening case against plug threads with a centre punch Fit new core plug in right-hand side of bracket

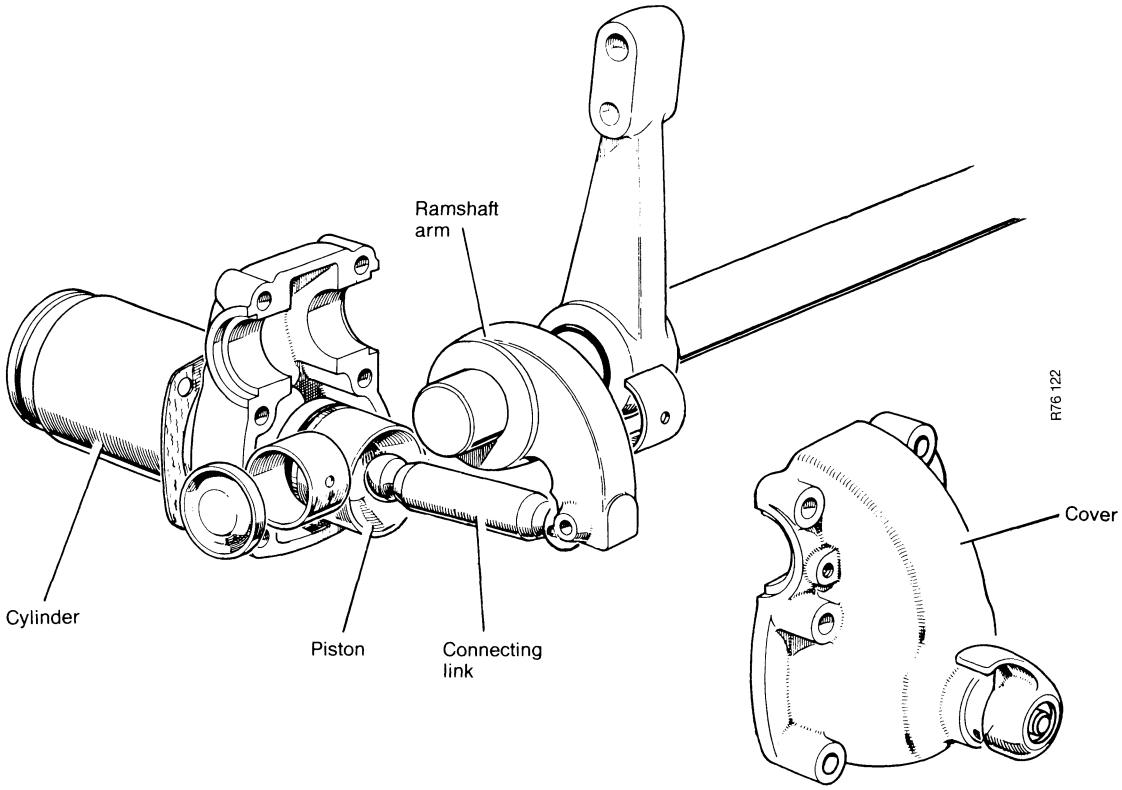

FIGURE 69 RAM CYLINDER

Ram Cylinder: Subject to availability of oversize pistons, a cylinder with worn or damaged bore may be reconditioned by reboring and a 0 020in oversize piston fitted As a bored finish is too rough for the 'O' ring to operate against, **the cylinder must be honed after boring.** The bore must be honed to a surface finish not greater than 16 micro-inches, centre line average, which is a highly polished finish; otherwise the 'O' ring will fail to make a seal after a short period of service. Oversize sealing rings are not available: oversize pistons are made to utilise standard sealing rings, which can easily accommodate the small increase in bore size

Piston seals: The rubber 'O' ring is backed by a leather ring, which prevents the 'O' ring from being extruded into the clearance between piston and bore The anti-extrusion ring must, therefore, always be fitted on the skirt (non-pressure) side of the 'O' ring

When fitting new piston seals, soak leather anti-extrusion ring in thin oil for thirty minutes Clean the piston and fit leather ring first, taking care not to stretch ring further than necessary and positioning ring so that rough side of leather is towards piston crown, *i e* on the 'O' ring side. Fit a new 'O' ring on crown side of leather ring and when 'O' ring is in position examine leather ring to ensure that it stands proud of piston all the way round its circumference Allow leather ring to settle after being stretched over piston

Clean bore and piston then smear piston with clean oil before fitting it into ram cylinder Edge of bore is chamfered to assist entry of sealing rings and if cylinder is installed on tractor open the vent valve, to prevent air being trapped behind piston.

Locking Latch: The ram cylinder cover incorporates a latch which, when released, engages under the ramshaft arm and locks the linkage in the raised position To strip the locking latch, turn operating lever into 'engage' position and remove circlip from end of latch pin Removing operating lever and dirt excluder will then expose another circlip. Remove locating screw from cover boss then remove the second circlip and push the latch pin inwards out of the cover Remove 'O' ring, spacer and spring from pin

Do not attempt to remove the two needle rollers unless they are to be renewed, and take care that they are not damaged by careless handling of cover: the rollers are hard and will break before bending.

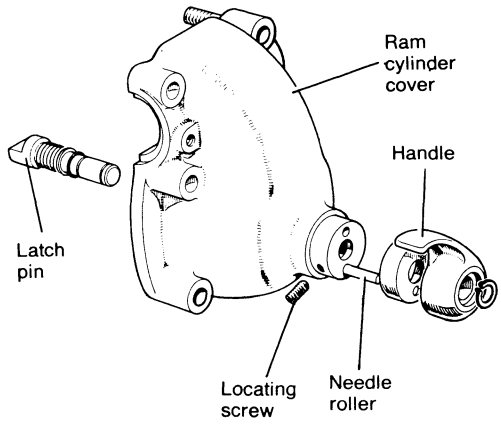

FIGURE 70
LINKAGE LOCKING LATCH

In the event of a roller being broken in the cover, two new holes should be drilled as the rollers are too hard to be drilled out When fitting new rollers press them into the cover until ends of rollers are 18·49 – 18 24mm (0 728 – 0 718in) from cover face If roller protrusion is outside these limits the latch pin will either not disengage or have insufficient hold on ramshaft arm to support heavy loads on linkage.

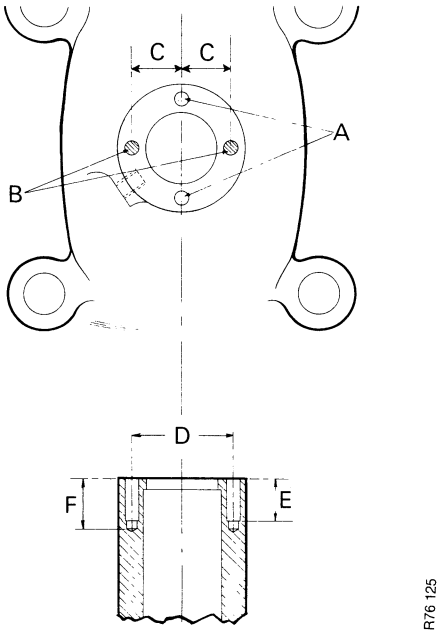

FIGURE 71
RE-DRILLING RAM CYLINDER COVER

Drill two holes 4 5mm ($\frac{11}{64}$in) diameter and 19 05mm ($\frac{3}{4}$in) deep at positions shown then ream to 4 37 – 4 75mm (0·1865 – 0 1870in) and 15 9mm ($\frac{5}{8}$in) deep

A Original holes B New holes
C. 17 46 – 17 48mm (0 6875 – 0 6885in)
D. 34 92 – 34 97mm (1 375 – 1 377in)
E. 15 7mm ($\frac{5}{8}$in) F. 19 05mm ($\frac{3}{4}$in)

To assemble the cover, fit spring, spacer ring and 'O' ring on latch pin, taking care that 'O' ring is not damaged as it passes over circlip grooves Smear pin with clean oil and refit inside cover, aligning the pin groove with locating screw hole in cover boss Clean locating screw, smear threads with Loctite (hydraulic seal grade) then screw it in until it touches bottom of pin groove and **unscrew** a quarter turn Push pin into postion to compress spring and expose inner circlip groove Replace circlip, smear pin and needle rollers with grease then refit dirt excluder. Push latch, to compress spring, then refit operating lever, in 'engage' position and replace outer circlip. Finally turn operating lever several times to check that latch pin slides freely

Ramshaft arm: The ramshaft arm is splined and shrunk on to the ramshaft. A new arm may be fitted, if a new part is available and provided that:—

1. The original position of the arm is clearly marked and the assembly marks on arm and shaft splines are visible.

2. The arm is first cut so that it can be split to release its grip on shaft, before being removed Removing an arm without first splitting it will reduce the shaft interference fit and allow the new arm to work loose

3. Heat the splined end of the new arm to 500°C (900°F) before pressing it on shaft until it reaches the exact position of the original Do not heat the spherical seat end of the arm: this will destroy the heat treatment and soften the seat surface

Three-Point Linkage: The fork ends, adjusting screws and gear housing should be lubricated with grease every 60 hours

Pivot Pins: On early tractors the pivot pins attaching the lift rod and levelling lever to the fork ends were retained by a circlip at each end of pin but on later tractors the pins are drilled and secured with spring pins. The later type pins (948353) and spring pins (623740) can be used to replace earlier type pins.

Lift Rod: This can be dismantled by simply unscrewing the adjusting nut and removing the fork pivot pin, which should be tight in the rod and free in the fork The tube is secured by being peened into the rod groove at three equally-spaced points

Hitch Brackets: The lower link hitch brackets must be firmly attached to the axle case. If the brackets are removed ensure that both faces are clean when refitted and the bolts tightened evenly to the correct torque and locked with tabwashers.

Levelling Lever: Dismantle this by unscrewing the adjusting nut then removing the four cover bolts and separating the cover and housing.

Turn the housing over so that the screw and thrust bearing will drop out To remove handle, drive retaining pin out of pinion then drive handle out of pinion with a small punch Smear all parts with grease before re-assembling Pack the housing with grease before fitting the cover and tightening bolts evenly to the correct torque

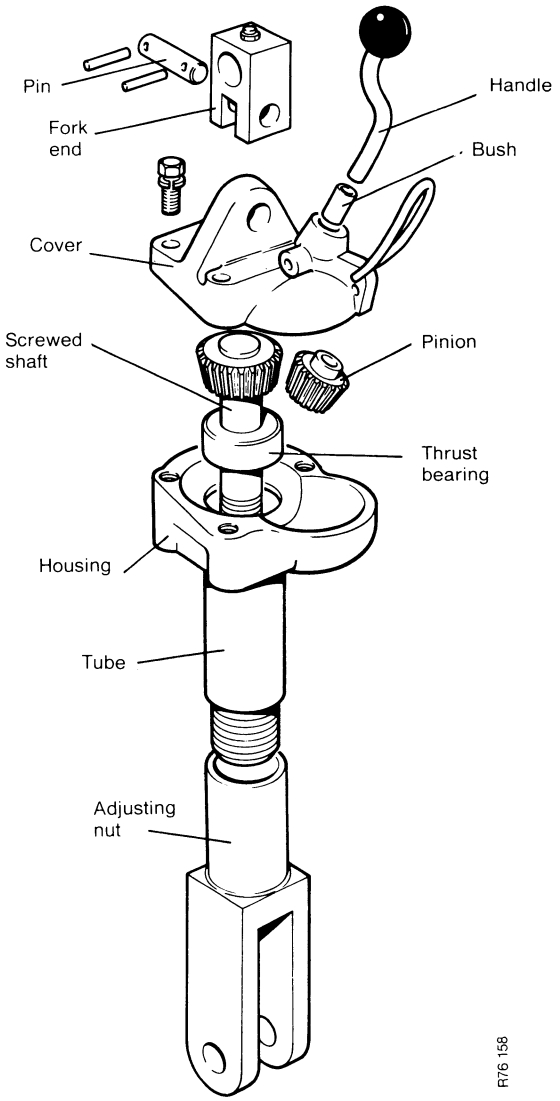

FIGURE 72 LEVELLING LEVER

Linkage Support Ram: Clamp the ram horizontally in a vice Holding it in the centre and not gripping it tight enough to distort the ram case Insert a screwdriver blade under the lip of the scraper seal, lift seal from its retaining groove then slide it along ram rod

Insert a pair of circlip pliers into cut-out in sleeve and compress the circlip Whilst holding circlip central in sleeve, pull ram rod past the end of its stroke so that it pulls the sleeve with it and moves circlip clear of its groove When circlip has been displaced from its groove, pull ram rod and sleeve out of case.

To remove sleeve from ram rod remove the two circlips and stop ring from inner end of rod then slide sleeve off rod. **Do not grip the ram rod between vice jaws,** unless they are fitted with soft jaw grips.

Ram seals: The sleeve has seals both outside and inside The outer seal consists of an 'O' ring with a leather anti-extrusion ring and prevents oil leaking between sleeve and cylinder The inner ram rod seals consist of an 'O' ring with leather anti-extrusion ring plus a separate Nu-lip sealing ring and an external scraper seal

Clean the sleeve, after removing the old seals. Soak the leather rings in engine oil for at least 30 minutes, to allow them to be stretched without damage, and fit these first. Place the rings so that the rough (hair grain) side of ring is towards the inner end of sleeve then fit 'O' rings against the rough side. The 'O' rings should then be on the inner (pressure) side of the leather rings and the leather rings positioned with the rough side against the 'O' ring. Ensure that 'O' rings are pressed down into bottom of groove but do not press them into position with anything sharp, such as a screwdriver as this may cut the ring, roll them into position with finger pressure Fit the Nu-lip seal in its groove, taking care not to damage the seal corners

Assembling the Ram: Wipe ram rod clean, then smear with clean oil and slide a new scraper seal on to rod Smear inside of sleeve with oil then carefully slide sleeve, with circlip in position, on to ram rod End of ram rod is chamfered but take care to ensure that seals are not damaged as they pass over rod end After fitting sleeve on ram rod, replace stop ring and **both** circlips.

Clamp the ram case horizontally in a vice holding it in the centre but not gripping it tight enough to distort case

Fill circlip groove in case with thick grease and smear outside of sleeve with oil Fit ram rod into case and slide sleeve into case end. Take special care when pushing sleeve seals past the circlip groove: the groove corner is chamfered and the grease will also assist the seals to pass the groove without being damaged.

Compress circlip and hold it central so that sleeve can be pushed 'fully home' and circlip seated in its groove Finally slide scraper seal along rod and carefully push it on to sleeve until seal inner lip engages on to sleeve shoulder

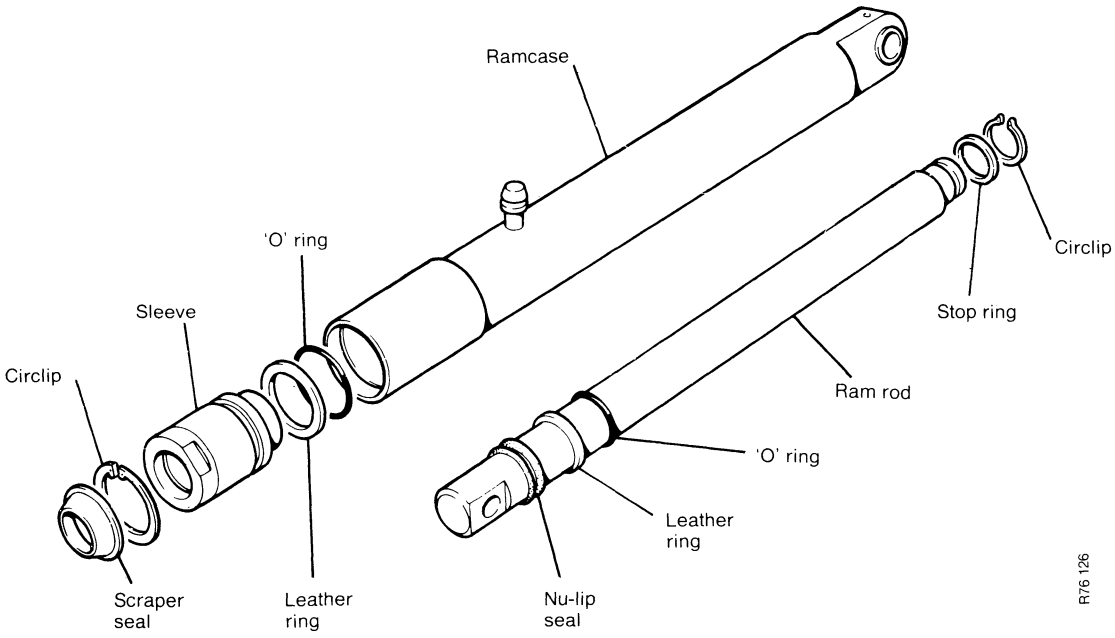

FIGURE 73 COMPONENTS OF LINKAGE SUPPORT RAM

Sensing Unit

The sensing unit and flexible cable should be lubricated every 60 hours through the grease nipples in centre of cable and sensing unit housing

When stripping a sensing unit for examination always examine the flexible cable With cable disconnected from sensing unit, grip cable nipple with a pair of pliers and whilst holding outer cable stationary, pull inner cable against its spring. If spring withdraws the cable as soon as it is released the cable is satisfactory but if cable is not withdrawn by spring, or if it is too tight to be pulled out, the cable should be renewed

Single rate sensing unit

To dismantle unit, remove the four setscrews from end-plate and insert a bar through link pin hole then pull shaft, complete with end-plate, out of housing Do not drive a screwdriver between end-plate and housing as this will damage the shims

Check that the end-plate is free to slide on shaft sleeve and the end collar is free to slide in housing bore

To dismantle shaft, drive pin out of collar and shaft then tap thrust washer and collar off shaft Do not attempt to remove collar and spring by pressing shaft out of end-plate — the end-plate cannot be removed until sleeve is removed from shaft The sleeve is screwed on to shaft and can be removed by holding the two flats on sleeve between vice jaws then turning the shaft by means of a bar through the link pin hole

To assemble unit, clean shaft and sleeve threads before applying a few drops of Loctite (grade 270) Fit a new 'O' ring inside end-plate bore, smear with grease and place end-plate on sleeve before screwing sleeve firmly on to shaft Replace spring, thrust washer and collar on shaft then fit retaining pin through collar When pin is in position check spring end float, if this is more than 0 25mm (0 010in) remove collar pin and fit a thicker thrust washer so that end float is reduced to a minimum without spring being compressed

Thrust washer details

Part No	Thickness
K915112	9 02mm (0 355in)
K915113	9 27mm (0 365in)
K915101	9 52mm (0 375in)
K915114	9 78mm (0 385in)
K915115	10 23mm (0 395in)
K915116	10 29mm (0 405in)

When collar is finally fitted, check that pin protrudes equally through both sides of collar and pin ends are not damaged. Pin must slide freely in the housing slots and, if necessary, clean ends of pin with a file

Smear shaft collar with grease and replace shims on end plate. Fit shaft assembly in housing and replace the four end-plate set screws Check shaft end float whilst evenly tightening the screws and note that it reaches a minimum when screws are fully tightened If tightening setscrews does not reduce shaft end float to less than 0 25mm (0 010in) the shim thickness is too great If tightening the setscrews reduces but then increases the shaft end-float as the screws are fully tightened the spring is being compressed, due to an insufficient thickness of shims

End-plate shims:

Part No	Thickness
K915096	0 13mm (0 005in)
K915097	0 25mm (0 010in)
K915098	0 76mm (0 030in)

Pack end of housing bore with grease, smear core plug with jointing compound then refit plug Apply a few shots of grease through the housing grease nipple

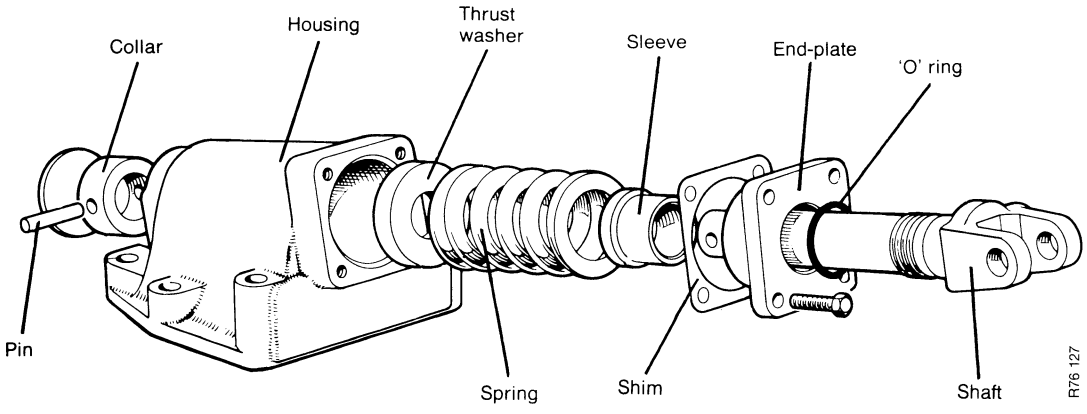

FIGURE 74 COMPONENTS OF SINGLE RATE SENSING UNIT

Selective Sensing Unit: To dismantle unit, lever out core plug from top of housing and place selector lever in vertical position Remove the four end-plate bolts and withdraw shaft assembly by placing a bar through the link pin hole When shaft has been withdrawn far enough for rack to be disengaged from pinion turn shaft 45° anti-clockwise to bring rack teeth opposite cut-out in housing then draw shaft assembly out of housing

Selector pinion can be removed, if necessary, by removing the grubscrew from housing and withdrawing the detent spring and plunger Turn pinion so that its retaining pin can be driven out — taking care not to bend the spindle — then, using a thin spanner, unscrew the screwed bush to withdraw handle and spindle

To dismantle shaft assembly, remove pin attaching end collar to shaft then slide the springs, carrier and thrust washer off the shaft, taking care of the shims fitted between the springs

End-plate can be removed by holding the two flats on sleeve between vice jaws then using a bar through link pin hole to unscrew the shaft

Commence re-assembly by fitting the end-plate on shaft If plate bush or oil seal are damaged or worn they should first be renewed Smear bush and oil seal with grease and sleeve threads with Loctite (grade 270) before fitting end-plate and firmly tightening sleeve on to shaft Fit the springs on their carrier then check that **ends of both springs protrude 0 13 – 0 26mm (0 005 to 0 010in) over ends of carrier.** If not, remove springs and change the thickness of shims

Place large thrust washer on to end plate dowels If the thrust washer dowels are offset the washer can only be fitted the correct way round but on early units the dowels were opposite each other and it is therefore essential that the washer is fitted the correct way round, otherwise the spring carrier slots will not be in the required position and the unit will not operate correctly Washers with dowel holes opposite each other therefore have an identification groove on one side and **washer must be assembled with the groove side towards the spring.**

Assemble carrier, with springs, thrust washer and collar on shaft. Tap the retaining pin into position then check the end float of the spring carrier, this must not exceed 0 30mm (0 012in) and can be adjusted by changing the thickness of the small thrust washer The collar is also provided with two pin holes which are 0 84mm (0 033in) apart so that using the appropriate hole and selecting a suitable thickness of thrust washer enables the end-float to be reduced to the required limit When shaft has been assembled check that the collar pin protrudes equally through each side of collar and is free to slide in housing slots; if necessary trim the pin ends with a file.

Thrust washer details

Part No	Thickness
K940039	9 63mm (0 379in)
K940040	9 35mm (0 368in)
K940041	9 07mm (0·357in)

Hold pinion in housing and smear spindle with grease before fitting it in position Carefully tap a new pin through pinion then replace detent plunger and spring Smear grubscrew threads with Loctite (grade 270) before screwing it into housing and set the screw by turning pinion so that plunger is **out of a detent groove** then tightening screw until it becomes solid and unscrewing it **three-quarters-of-a-turn.** Fit shaft assembly into housing, temporarily without shims, and measure the gap between housing and end-plate Hold end-plate against housing, with hand pressure, so that shaft is pushed 'fully home' and gap is equal all the way round whilst checking gap with a feeler gauge Remove shaft, fit shims of the same thickness as the measured gap on to end-plate then refit shaft Place selector lever in vertical position and ensure that rack is central; this can be checked by observing that rack protrudes an equal distance on both sides when viewed from underneath Tighten end-plate bolts evenly then check that selector lever can be turned into all three positions Coat pinion with grease then smear a new core plug with jointing compound and fit into housing Pack shaft end with grease then fit a new core plug.

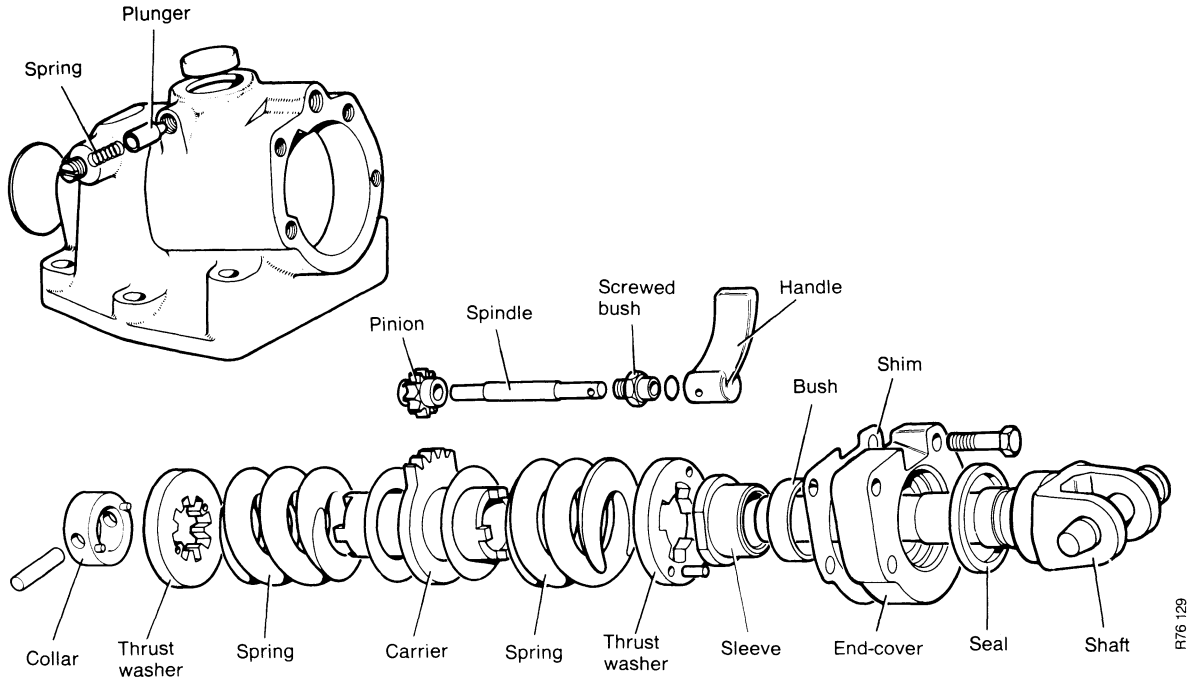

FIGURE 75 COMPONENTS OF SELECTIVE SENSING UNIT

Three-Way Take-Off Valve: To dismantle the valve, push the spool into its lowest position with the control lever then remove the control lever Insert a large screwdriver into the cover and lever the spool down until the detent balls are disengaged and the spool protrudes through lower end of body far enough to expose the spool lower 'O' ring: the end cap will be pushed out by the spool.

Remove 'O' ring from spool then remove the three cover screws and withdraw cover, taking care of the detent balls Push the spool upwards out of the body then remove upper 'O' ring from spool.

Assembling the valve First carefully examine the spool to ensure there are no deep score marks across the lands then check that it is a free sliding fit in valve body Do not attempt to clean a spool with abrasive tape; this would not only destroy the sharp corners on the lands but also reduce the diameter of the spool and increase any oil leakage If the spool is scored a new matched spool and body is required as the only permissible rectification is lightly lapping the spool into the valve body with metal polish

Having thoroughly cleaned the body and spool fit a new 'O' ring on upper end of spool then smear spool with clean oil. Fit spool into top of body and push it down **only far enough to expose the lower 'O' ring groove** then fit a new lower 'O' ring and push spool up into its working position

Caution — the spool must not now be moved from its working position as this will allow the 'O' rings to be trapped and damaged by the sharp edges of body oil ports

Fit a new breather pad into body recess then smear a new gasket with grease and place it in position Remove the detent spring grubscrew from cover then fit the first detent spring and ball in position Hold the body vertically on bench, **so that spool will not be pushed downwards out of body,** then fit the cover, holding detent ball against its spring with a screwdriver inserted through control lever aperture, until ball is engaged over the spool: take care not to allow ball to enter the hole for the control lever

When detent ball is engaged, refit the cover screws then coat control lever pivot ball with grease and replace the control lever. Check that spool operates correctly then fit the second detent ball and spring Smear grubscrew with Loctite (grade 270), screw it in until it touches the spring then screw it inwards a further $2\frac{1}{4}$ turns

Replace end cap, using a suitable socket, or tube to expand it until tight.

Seal the housing ports with masking tape.

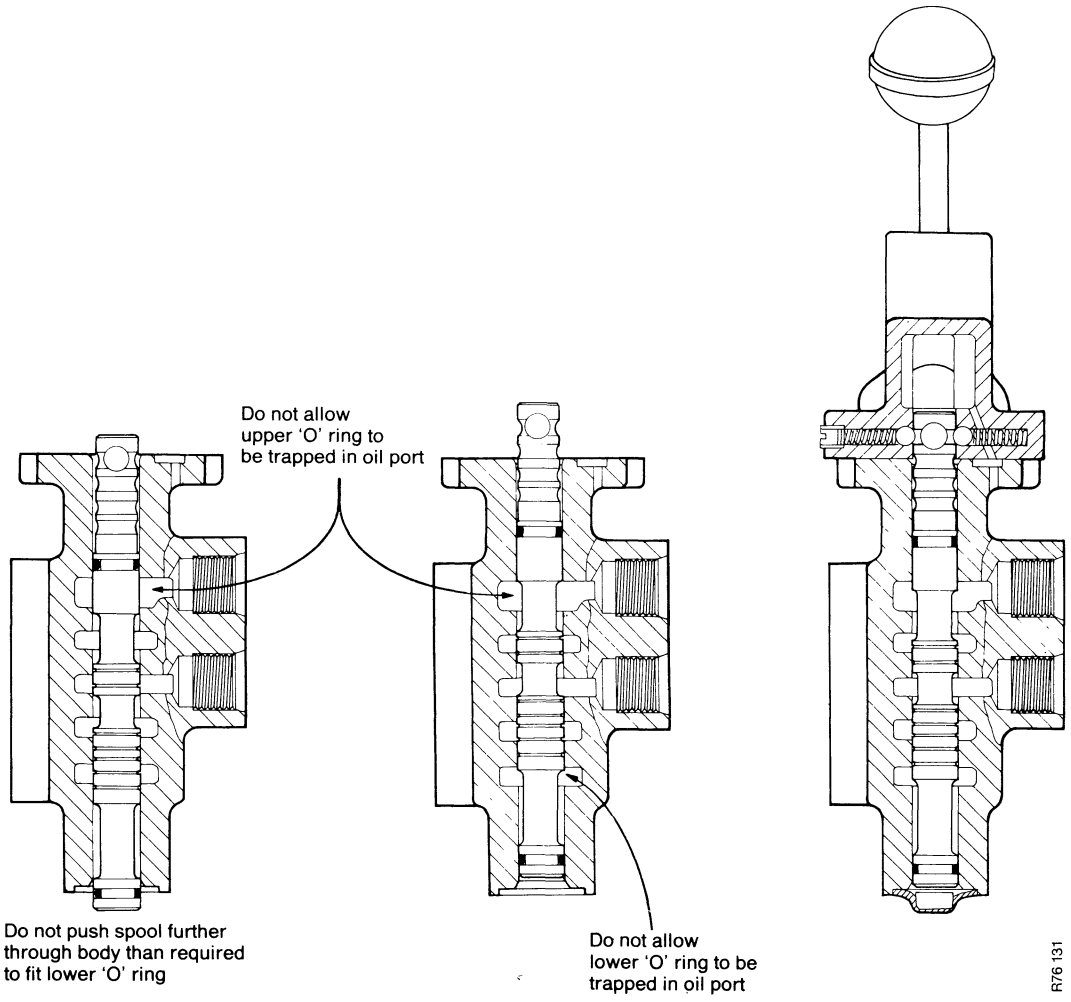

FIGURE 76 ASSEMBLING THREE-WAY VALVE

Double-Acting Live Take-off: It will not normally be necessary to completely dismantle a valve. The spool seals can be replaced without disturbing the pressure kick-out device and the kick-out mechanism can be dismantled without disturbing the spool seals.

Valve spool seals: To replace the spool seals, unscrew the end cap clear of body threads then disconnect spool from control lever spindle. On later valves this can be done by removing the spring link but on earlier valves it will be necessary to remove the pin from end of valve spool and whilst doing this it is essential to support the spool end, to avoid any possibility of bending the spool.

Remove any paint or dirt from spool end, so that it will not damage the body bore then grip the end cap and pull spool out of body: end cap will remain attached to spool and hold the detent balls in place.

Carefully remove the 'O' ring and wiper seal from control lever end of spool bore then remove the loose cap from other end and extract the 'O' ring.

Fit new 'O' ring and wiper seal into control lever end of spool bore and smear these with grease. Fit new 'O' ring on to shoulder of the loose cap — this will enable ring to be passed over the sharp corners of spool lands — then slide cap on spool before returning 'O' ring to its correct position at front of cap. Coat spool with **clean** oil then insert it into valve body. Replace connecting link or fit a new pin, supporting spool end as during removal. Screw end cap into body and tighten firmly then check for free operation of spool and detent mechanism.

Resetting Kick-out Mechanism: Unless a test rig is available this should be done with valve mounted on tractor.

Clean area round valve then disconnect pipes from valve and connect a pressure gauge and screw type valve between the two valve ports.

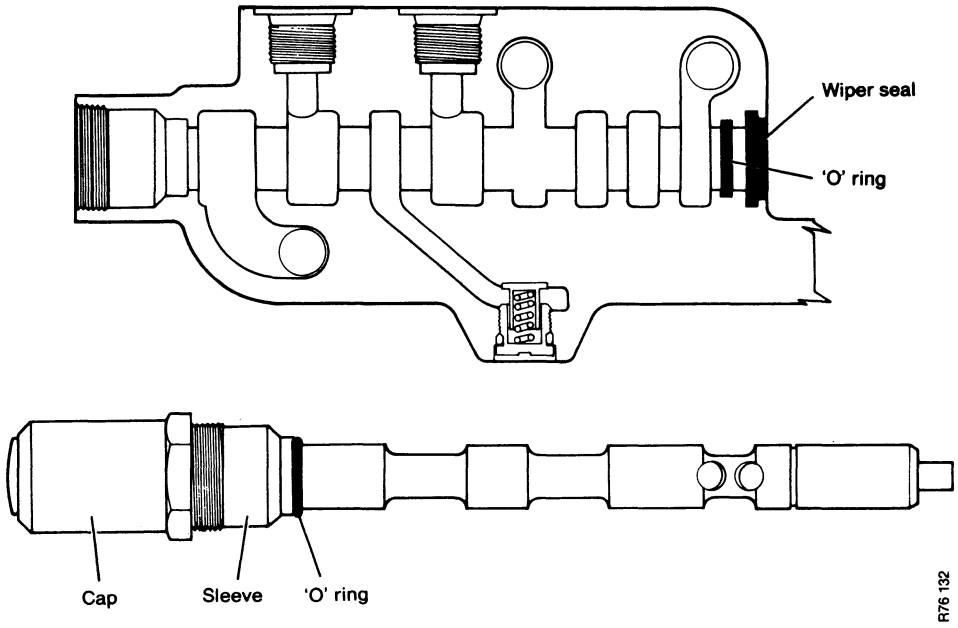

FIGURE 77 FITTING NEW SPOOL SEALS

Start engine and allow oil to reach working temperature then move control lever into detent position. Slowly close the valve and note the rise in pressure Observe the gauge reading reached before control lever kicks-off and returns to neutral: this should be 1750–2000lb/sq in and if not may be reset as follows:-

1 Unscrew cap from body, then jerk operating lever to rear whilst preparing to catch the detent balls Pull cap from spool

2. Unscrew retainer from spool, using a spanner on spool flats to prevent it turning

   The kick-out shims are fitted at the end of the retainer and if retainer end is flat simply smear a shim with grease, place it on end of retainer, then replace the retainer

   On later type units the end of retainer is recessed for location of spring and on these units the valve spring should be removed, coated with grease and then replaced If a shim is then smeared with grease and fitted in retainer recess the spring will be held central by the grease and will enter recess when retainer is refitted

3 After screwing retainer in position, smear detent balls with grease, hold control lever vertical then push cap over the balls and screw it tight into body.

4. Retest as previously to check that kick-out pressure is satisfactory

Dismantling kick-out mechanism: Unscrew end-cap, then jerk operating lever to rear whilst preparing to catch the detent balls. Pull end-cap off the spool

Remove circlip, disc and spring from spool then unscrew retainer, whilst holding spool with a spanner on the two flats

Dismantle retainer by shaking the plunger out then push piston out with a piece of stiff wire. Extract any shims, spring and valve from inside the spool then wash all parts.

Commence re-assembly by fitting the valve inside the spool: some units have a plunger type valve and others have a steel ball. Coat the valve spring with grease before replacing it in spool If a spring guide was fitted replace this against spring, the grease will hold spring central so that it will enter recess in guide

Replace return spring and washers on retainer then smear shims with grease and fit these on end of retainer; if retainer end is flat — some are recessed — ensure that shims are placed centrally, so that they are clear of threads Screw retainer into spool then replace piston, plunger spring, disc and circlip

Smear detent balls with grease and place these in position, then whilst holding control lever vertical push cap over detent balls and screw it into valve housing

Check that spool moves freely and detent engages correctly

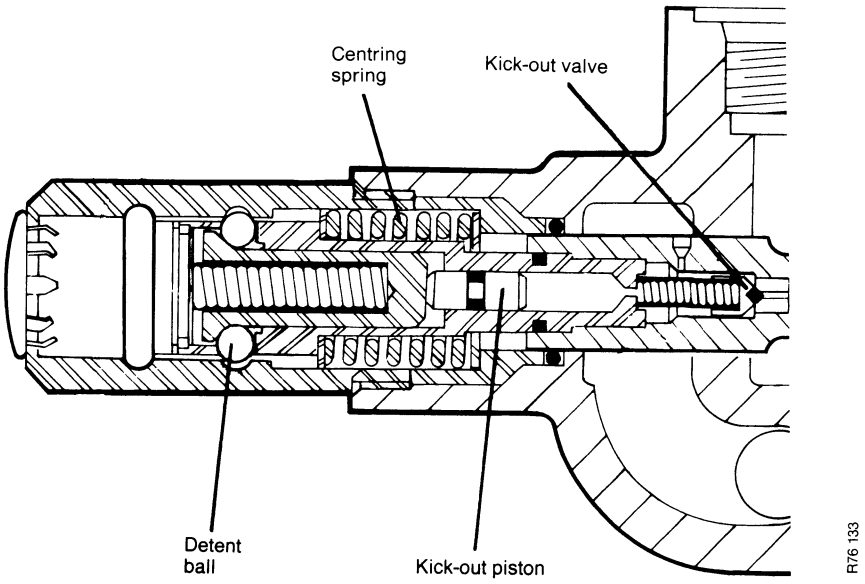

FIGURE 78 AUTOMATIC KICK-OUT MECHANISM

Full-flow Filter

Element — (K920522)	AC Delco 7973324
Element filtration	40 microns
Element flow — when passing Shell TOU 20W/30 at 40°C and with a maximum pressure drop across element of 27 9mm (1 1in) HG	
element K920522	22 7litre/min (5gal/min)
By-pass valve and screen assembly	K920521
By-pass valve opening vacuum	200 – 220mm (7 8 – 8 7in) Hg
Tightening torques:	
cover bolts — $\frac{5}{16}$ UNC	2 1kg metre (15lb ft)

Hydraulic Pump

Pump type	
K962635	Plessey 550/8/16013
K917541	Dowty PA(C) 6844A(–1)
Output at 2,000 rev/min engine speed and 1,500kg/cm² (500lb/in²) at 45°C oil temp.	
pumps K962635	24litre/min (5 3gal/min)
pumps K917541	25litre/min (5 5gal/min)
Outputs quoted are for new pumps: worn pumps are acceptable if output is not less than 90% of a new pump	
Tightening torques	
body through bolts (Plessey) — $\frac{3}{8}$ UNF	(5 5-6)kg metres (40-45lb ft)
body through bolts (Dowty) — $\frac{3}{8}$ UNF	(5 2-5 5)kg metres (38-40lb ft)
drive shaft nut — $\frac{7}{16}$ UNF	6 2kg metres (45lb ft)

Pump Relief Valve

Shim adjustment	0·5mm (0 020″) shim = 7kg/cm² (100lb/in²)
Valve closing pressure	141kg/cm² (2000lb/in²)
Valve opening pressure	154kg/cm² (2200lb/in²)
Tightening torques:	
valve body to pump cover	2 7kg metres (20lb ft)

Selectamatic Control Valve

Hold relief valve spring free length	18 6mm (0 73in)
Hold relief valve spring rate	21 8kg/cm (122lb/in)
Hold relief valve opening pressure	17 6kg/cm² (2500lb/in²)
Latching valve spring free length	19mm (0 75in)
Latching valve spring rate	3 04kg/cm (17lb/in)
Rate of lowering spring free length	35 6mm (1 40in)
Rate of lowering spring rate	2 34kg/cm (13 2lb/in)
TCU spring free length	20 3mm (0·80in)
TCU spring rate	33 0kg/cm (185lb/in)
TCU pressure (maximum)	52 7kg/cm² (750lb/in²)
Steel ball diameters	
TCU (K17063)	6 3mm (0 25in)
by-pass plunger (K11548)	3 2mm (0 125in)
hold valve plunger (K11548)	3·2mm (0 125in)
Tightening torques:	
valve-to-bracket bolt and nuts — $\frac{5}{16}$UNC	2 1kg metre (15lb ft)
valve-to-pipe connector bolts — $\frac{5}{16}$UNC	2 1kg metre (15lb ft)

Ram Cylinder

Ram cylinder bore — 990 (standard)	88·9mm (3·501in)
Ram cylinder bore — 990 (oversize)	89·43mm (3·521in)
Ram cylinder bore — 885 (standard)	79 4mm (3 125in)
Piston stroke — 990	139mm (5 31/64in)
Piston stroke — 885	114mm (4 23/64in)
Piston diameter — 990 (standard)	88·87mm (3·499in)
Piston diameter — 990 (oversize)	89·38 mm (3·519in)
Piston diameter — 885 (standard)	79 3mm (3·996in)
Tightening torques —	
ram cylinder cover bolts — 1/2 UNC	9·0kg metre (65lb ft)
ram cylinder-to-axle bolts — 5/8 UNC	19·4kg metre (140lb ft)
ram cylinder-to-axle bolts — 1/2 UNC	10 4kg metre (75lb ft)
ram cylinder bleed valve — 1/8 BSP	1 1kg metre (8lb ft)

Linkage Support Ram

Ram rod diameter	44·45mm (1·750in)
Ram stroke	27·9cm (11in)
Ram sleeve diameter	63·58mm (2 503in)
Ram sleeve bore	44·50mm (1·752in)

Sensing Unit (Single Rate)

Spring free length	108mm (4 25in)
Spring rate (990)	1930kg/cm (10,800lb/in)
Operating force — maximum	
compression	1500kg (3300lb)
tension	625kg (1350lb)
Spring rate (885)	893kg/cm (5000lb/in)

Sensing Unit (Selective)

Spring free length, heavy spring	70·64mm (2·781in)
Spring rate, heavy spring	3750kg/cm (21,000lb/in)
Spring free length, light spring	56·36mm (2·219in)
Spring rate, light spring	1930kg/cm (10,800lb/in)
Operating force — maximum	
light draught (compression)	907kg (2000lb)
light draught (tension)	478kg (1100lb)
medium draught (compression)	1360kg (3000lb)
medium draught (tension)	725kg (1600lb)
heavy draught (compression)	2721kg (6000lb)
heavy draught (tension)	1496kg (3300lb)
Tightening torques:	
end plate-to-housing bolts — 3/8 UNC	4 2kg metre (30lb ft)
housing-to-PTO unit bolts — 1/2 UNC	10·5kg metre (75lb ft)

Three-point Linkage

Levelling lever lengths	
maximum, U1384-5 linkages	451mm (17 3/4in)
minimum, U1384-5 linkages	352·5mm (13 7/8in)
maximum, U1504 linkage	546mm (21 1/2in)
minimum, U1504 linkage	429mm (16 7/8in)
Lift rod lengths	
maximum, U1384-5 linkages	444·5mm (17 1/2in)
minimum, U1384-5 linkages	391mm (15 3/8in)
maximum, U1504 linkage	533mm (21in)
minimum, U1504 linkage	432mm (17in)
Tightening torques:	
levelling lever gear housing bolts — 7/16UNC	4·2kg metre (30lb ft)
hitch brackets-to-axle case bolts — 3/4UNF	19·4kg metre (140lb ft)

Three-way Take-off Valve

Take-off pipe connections	3/4 UNF
Tightening torque — valve body bolts — 3/8 UNC	3·5kg metre (25lb ft)

Double Acting Live Take-off Valve

Take-off pipe connections	3/4 UNF
Kick-out operating pressure	158kg/cm² (2250lb/in²)
Tightening torque-valve body bolts — 3/8 UNC	3·5kg metre (25lb ft)

SUMMARY OF DESIGN CHANGES

Details of change	When introduced
Sensing unit changes from single-acting (compression only) to double-acting compression and tension Height control push rod operated by cam on ramshaft instead of connecting link as previously.	770/383397 (April 1966)
Hydraulic pump modified to give rotor bushes a more uniform balancing action. Part number of pump changed from K913394 to K917541. Pumps, but not components, are interchangeable.	990/488989 880/534055 770/584078 (June 1966)
Lower links and top links lengthened, 990 tractors to increase implement clearance With 12-38 tyres 917420 lower link, 38½in (97 8cm) 917429 screw and housing, 8½in (21·6cm)	(June 1966)
Diameter of bolts attaching cap to levelling lever gear housing increased from $\frac{3}{8}$ UNC to $\frac{7}{16}$ UNC. New assembly (K919619) interchangeable with previous levelling lever K915775.	990/492888 880/536971 (October 1966)
Ramshaft bracket fitted with $\frac{9}{16}$ UNF plug in place of core plug (K24711), to prevent over-selection of dial pointer mechanism into TCU/Ext position.	990/505153 880/545679 780/600894 770/588585 (March) 1968
Check chain anchor bracket setscrews K603042 changed to K603039. Both setscrews are $\frac{7}{16}$ UNC but K603039 has a larger ($\frac{5}{8}$ AF) head to give an improved conical seat.	990/803189 (June 1968)
Check chain anchorage changed from PTO case to top of drawbar frame. Check chains strengthened and fitted with an adjustable link.	990/804700 (September 1968)
Ram cylinder bolts K601280 fitted with hardened steel washers, (K626874), to ensure that initial tightening torque is maintained. Fitting of bonded sealing washers (K623515) discontinued.	990/805220 (October 1968)
Double-acting take-off valve levers fitted with key (K622382) to ensure more positive clamping of lever on shaft.	990/813092 880/554040 780/603808 (August 1969)
Sensing unit shaft (K919726) changed to include machined boss at clevis end, and thus dispense with separate distance pieces (K915260). Part number of shaft unchanged	990/812383 (August 1969)
Hydraulic pump drive gear changed from spur to helical teeth. Part number of gear changed from 914466 to 927097 Magnetic filter K904390 fitted inside filter by-pass valve, K920521, to arrest any particles which by-pass the paper element when valve is open.	990/819580 880/557477 780/608867 (October 1970) 990/828205 880/561608 780/610076 (March 1971)

SUMMARY OF DESIGN CHANGES

Details of change	When introduced
Levelling lever assembly, K929332, changed to friction welded assembly K940508 Complete assemblies fully interchangeable.	996/980046 995/922030 990/851155 885/620065 (April 1972)
By-pass plunger in control valve changed. Nylon filter and restrictor washer with 0 022in (0 56mm) dia hole deleted and 0·069in (1 8mm) washer fitted with self-centring metering pin	996/980826 995/923250 990/852760 885/622599 (September 1972)
Magnetic plug (K947236) fitted in connector housing K917127, in place of standard, $\frac{3}{4}$ UNF plug K920826.	996/983571 995/927514 990/857828 885/629289 (October 1973)
Ram cylinder supply pipe (K928511) fitted with 'O' ring, to prevent oil leakage where pipe protrudes through rear axle case.	996/983571 995/927514 990/857828 885/628722 (October 1973)
Double-acting take-off control levers changed from forgings to fabricated construction. Method of attaching levers to valve spindle changed from clamp bolt to locating screw.	(November 1973)
Selective sensing unit thrust washer dowels offset, so that washer cannot be assembled incorrectly. New end plate K947300 and thrust washers must be used together.	(February 1974)
Linkage pivot pins (K940000) changed to pins K94835 which are located by spring pins (K623740) instead of circlips, as previously.	996/984571 995/929586 990/861167 885/633322 (July 1974)
By-pass plunger in control valve changed so that it rotates in service, flutes angled and spring retainer fitted with steel ball at its centre. Metering pin deleted and original orifice washer with nylon filter refitted	996/984571 995/929540 990/860534 885/632189 (November 1974)
Check chain attachment plate bolted between hitchplates (previously welded to drawbar support), to facilitate the introduction of 885 type pick-up hitch. Also new support ram introduced. (Support ram and pick-up hitch cannot be used together).	990/865634 995/93332 996/987257 (August 1975)
By-pass filter aperture cover modified to ensure that external service oil is returned to gearbox lubrication system.	885 Narrow (August 1975)
Revised hydraulic control valve adjustment procedure issued for tractors fitted with Q cabs.	(September 1976)

Other David Brown Tractors publications on hydraulics are obtainable through your DB Dealer or from Publications section, David Brown Tractors Ltd., Meltham, Huddersfield, England, HD7 3AR.

Repair Manual section. Hydraulic system — Selectamatic tractors	9-37211
Repair Manual section. Hydraulic system — Front mounted pump	9-37241
Repair Manual complete: Tractors with Implematic ® hydraulic system	9-38100
Reprints from "Farm Mechanization": Selectamatic system	9-42721
Implematic system	9-42731
Wallcharts — operation and adjustment of: Selectamatic system	9-38201
Take-off valves for external equipment	9-38301
Implematic system	9-38291
Instructional drawings: Selectamatic system	9-38532
• Flow diagrams	9-38631
• Circuit diagram, 1200 and 1400 series tractors	9-38632

Some of these publications are available in other languages — please ask for details.

NOTE: The CASE CORPORATION reserves the right to make improvements in design or changes in specifications at any time without incurring any obligation to install them on units previously sold.

Electrical System

SERVICE INFORMATION

ELECTRICAL EQUIPMENT

Written In *Clear And Simple English*

This Section Replaces 9-37221

CASE CORPORATION

Pub 9-37222

Printed in U.S.A.
January, 1979

CONTENTS

	Page
Battery	
Safety Rules	H1
How it works	H2
Fault finding	H3
Maintenance and repair	H4
Alternator	
How it works	H8
Fault finding	H9
Maintenance and repair	H15
Dynamo	
How it works	H29
Fault finding	H30
Maintenance and repair	H32
Voltage regulator	H40
Starter Motor	
How it works	H44
Fault finding	H47
Maintenance and repair	H49
Wiper Motor	
How it works	H62
Fault finding	H63
Maintenance and repair	H65
Gauges	
How they work	H69
Fault finding	H70
Warning Lamps	
How they work	H72
Thermostart	
How it works	H73
Fault finding	H74
Wiring	
General description	H75
Colour coding	H76
Connectors and terminals	H79
Wiring diagrams	H84
Specifications and data	H117
Summary of changes	H122

NOTE: The CASE CORPORATION reserves the right to make improvements in design or changes in specifications at any time without incurring any obligation to install them on units previously sold.

SAFETY RULES

DANGER: Batteries release gases, keep sparks, flames and cigarettes away from batteries. Make sure there is a good movement of air in the area, especially when giving a battery a charge. If these instructions are not followed, combustion of the gases will occur and cause injury.

WARNING: When you remove a battery, disconnect the ground cable first. When installing a battery, connect the ground cable last. Failure to follow this procedure will cause sparks. These will cause combustion of the gases released from the battery and cause injury.

WARNING: Battery acid can cause bad burns. If acid comes into contact with any part of the body, wash with water. Flush eyes with water for 15 minutes. Permanent damage to the eyes will occur if these instructions are not followed.

For internal treatment, drink large quantities of water or milk. See a doctor as soon as possible.

Keep batteries away from children.

CAUTION: Electricity flows through metal. Never have a ring or metal watch band on your body when working near electrical equipment. Injury to the body will occur if these items come into contact with electrical connections.

BATTERY

HOW IT WORKS

The battery is made of groups of positive and groups of negative plates separated by insulation plates made of plastic.

All these are put into an electrolyte solution of sulphuric acid and distilled water inside a plastic case. The battery is given an electrical charge by connecting an external current supply to the terminals. The current moves from positive to negative. The positive plates change to lead peroxide and the negative change to spongy lead.

The battery keeps the charge in storage until needed. There will be a gradual loss of charge if the battery is not used. Internal damage will occur if the battery is kept in storage and not given a charge.

When an electrical circuit is connected to the battery terminals an electrical current flows from the battery. The current moves in the opposite direction to the charging current.

This is caused by a reaction between the electrolyte and the charged lead plates.

While the battery is releasing current the electrolyte is putting a deposit of sulphate on the plates. This causes the electrolyte to become weak and the battery voltage to decrease.

The battery must be given an electrical charge again to return the battery to a full charge. This is done by the dynamo or alternator while on the vehicle.

The battery is best given a charge from an external current, when the charge condition is less than 70%.

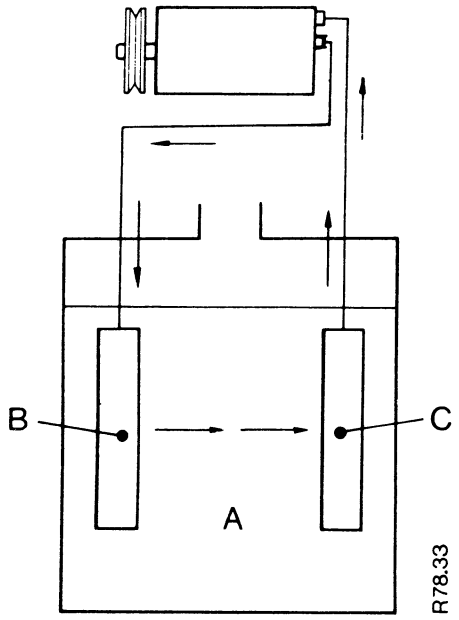

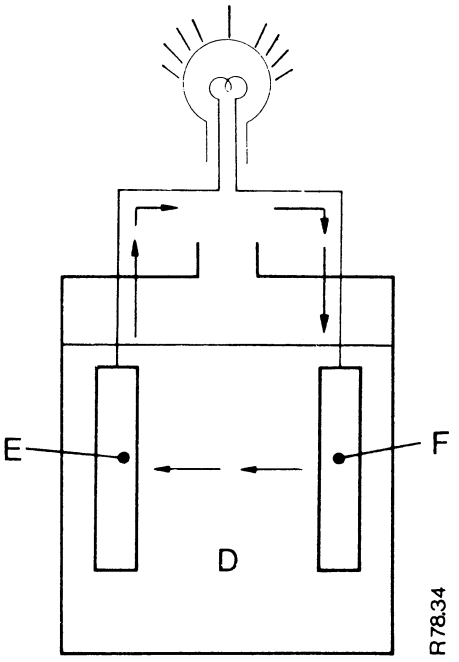

Figure H1
MATERIAL CHANGES

A. Charged battery.
B. Positive plate, lead peroxide.
C. Negative plate, spongy lead.
D. Discharged battery.
E. Positive plate, lead sulphate.
F. Negative plate, lead sulphate.

FAULT FINDING

Equipment Needed

Hydrometer.
D.C. moving coil voltmeter (0–40 volts).
D.C. moving coil ammeter (5–60 amps).
Heavy Discharge Tester.
An extra battery, in good condition.

TEST 1: Specific Gravity

Use an hydrometer A to check the specific gravity of the electrolyte in each cell. The test will not show correct results if distilled water has just been added. The solution must be completely mixed.

Temperature correction

For every 10° Celcius **less** than 15° Celcius, subtract 0.007 from the specific gravity shown on the hydrometer.
For every 10° Celcius **more** than 15° Celcius, add 0.007 to the specific gravity shown.
For every 10° Fahrenheit **less** than 60° Fahrenheit, subtract 0.004 from the specific gravity shown.
For every 10° Fahrenheit **more** than 60° Fahrenheit add 0.004 to the specific gravity shown.
Example:
Specific gravity corrected to 15° Celcius (60° Fahrenheit) for temperatures **less** than 25° Celcius (77° Fahrenheit).

Full charge 1.270–1.290.
70% charge 1.230–1.250.
Discharged 1.110–1.130.

For temperatures **more** than 25° Celcius (77° Fahrenheit).

Full charge 1.210–1.230.
70% charge 1.170–1.190.
Discharged 1.050–1.070.

The battery must be given a charge if less than 70% charge is shown. If there is a difference of more than 0.040 between cells make a complete check of the battery.

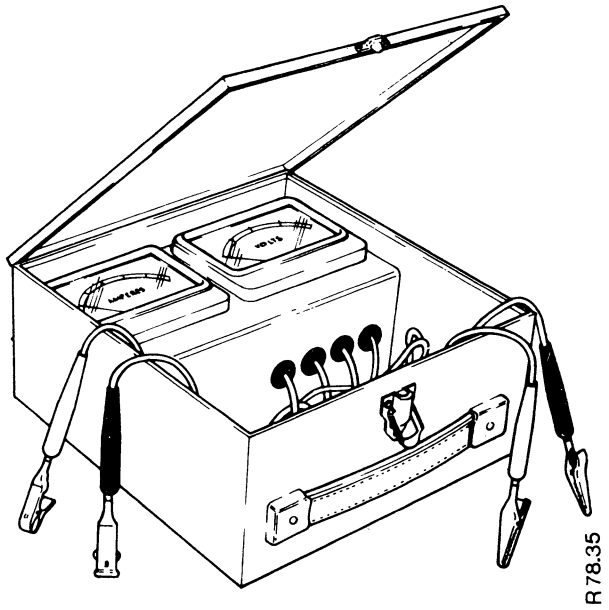

Figure H2
TEST METERS

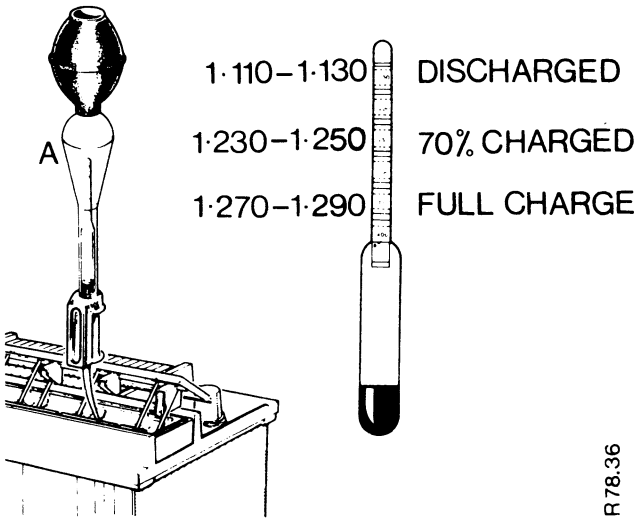

Figure H3
SPECIFIC GRAVITY TEST
A. Hydrometer

TEST 2: Discharge Rate

This test can be done to check battery condition if the results of TEST 1 are not acceptable.

1. Connect a Heavy Discharge Tester to the battery terminals.
   Positive to positive, negative to negative.
2. Set the tester to an ampere setting three times the 20 hour rate of the battery.

Example: Battery capacity is 96 AH (ampere hour) at the 20 hour rate. Multiply the ampere hour by 3, the result is 288. Set the meter to 290 amperes.

3. After 15 seconds discharge at this rate, read the voltmeter.

If the voltmeter shows more than 9.6 volts after 15 seconds the battery is in good condition. If less than 9.6 volts, install a new battery or have it checked by a battery specialist.

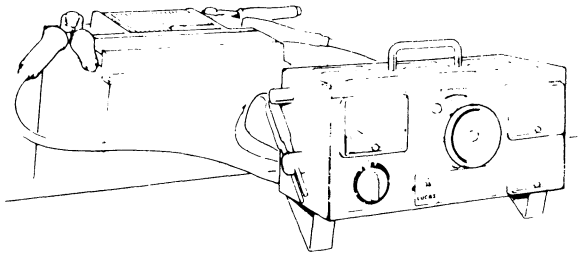

R 78.37

Figure H4
BATTERY DISCHARGE TESTER

MAINTENANCE AND REPAIR

MAINTENANCE

1. Check the level of the electrolyte every 60 hours. Add only distilled water to the level of the splash guard.
2. Keep the battery clean and dry at all times, especially the top.
3. Apply petroleum jelly to the terminals to prevent oxidation. Corrosion between terminal and battery post will give a bad connection and bad starting. Make sure the terminals are tight.
4. Make sure the battery holding clamp is tight. Any vibrations can cause internal damage and a loss of battery efficiency.
5. Keep the battery tray clean. Wash off all corrosion with a solution of ammonia or soda and hot water. Apply acid resistance paint to all metal parts after all corrosion is removed.
6. Batteries in storage must be given a charge from time to time to keep a full charge. Damage will occur if a battery is in storage for a long time in a discharged condition. A discharged battery will freeze in cold conditions.
7. Batteries in use on vehicles must also be given a charge from an external supply every six months. A battery is not kept at full charge by the vehicle generating equipment.

BATTERY CHARGING

Rate: Set the equipment to $\frac{1}{10}$th of the 20 hour rate of the battery.
Example: The battery is 60AH ÷ 10 = 6 amperes setting.

Filler Caps: These must be removed when giving a battery a charge.

Connections: Make sure the battery and equipment connections are clean and dry.
Make sure the connections are tight and safe from making sparks.

> ⚠ **WARNING**: When you remove a battery, disconnect the ground cable first. When installing a battery, connect the ground cable last. Failure to follow this procedure will cause sparks. These will cause combustion of the gases released from the battery and cause injury.

Electrolyte: Keep the electrolyte at the correct level, during the charge. Add only distilled water to the electrolyte. Fill to level of splash guard. Keep the top of the battery dry and free from electrolyte.

Stop the charge before trying to clean the battery top.

> ⚠ **WARNING**: Battery acid can cause bad burns. If acid comes into contact with any part of the body, wash with water. Flush eyes with water for 15 minutes. Permanent damage to the eyes will occur if these instructions are not followed.
>
> For internal treatment, drink large quantities of water or milk. See a doctor as soon as possible.
>
> Keep batteries away from children.

Specific Gravity: Check this with an hydrometer at one hour intervals during the charge. When the specific gravity shows the same results on three checks following each other, the charge is complete.

Voltage: Check the battery voltage just before and after the start of the charge. If the voltage has not increased check the polarity of the connections.

Temperatures of Electrolyte: For batteries which operate in air temperatures of less than 25° Celcius (77° Fahrenheit), keep the electrolyte temperature to less than 38° Celcius (100° Fahrenheit).
For batteries which operate in air temperatures of more than 25° Celcius (77° Fahrenheit), keep the electrolyte temperature to less than 50° Celcius (120° Fahrenheit).

Gassing: This is the name for the release of oxygen and hydrogen gases from the battery. It increases when the battery is given a charge. All possible causes of sparks or flame must be kept away. Also make sure there is a good movement of air through the area.

> ⚠ **DANGER**: Batteries release gases, keep sparks flames and cigarettes away from batteries. Make sure there is a good movement of air in the area, especially when giving a battery a charge. If these instructions are not followed, combustion of the gases will occur and cause injury.

Fast Charging

This must only be done in an emergency. It **must not** be repeated at regular intervals or damage will occur to the battery. The life of the battery will be decreased.

The battery temperature must not increase to more than 43° Celcius (110° Fahrenheit) during the charge. If the air temperature is more than this amount, a fast charge **must not** be given.

A fast rate of charge can be used to increase the charge in a battery to 70%–80%. The rate of charge must be decreased gradually during the charge. The temperature will increase to more than the limit if this is not done. A normal rate of charge must be used to complete the charge, but the battery must first cool to 32° Celcius (90° Fahrenheit).

Spacing: There must be a space of not less than 25mm (1in) around all batteries.

DANGER: Before removing the connections from the battery always turn the equipment switch to 'OFF'. If the connections are removed first, a spark will occur and cause combustion of the gases.

Installing: Make sure the battery is clean and dry and the filler caps are installed correctly. The battery can then be installed on the tractor.

CAUTION: Electricity flows through metal. Never have a ring or metal watch band on your body when working near electrical equipment. Injury to the body will occur if these items come into contact with electrical connections.

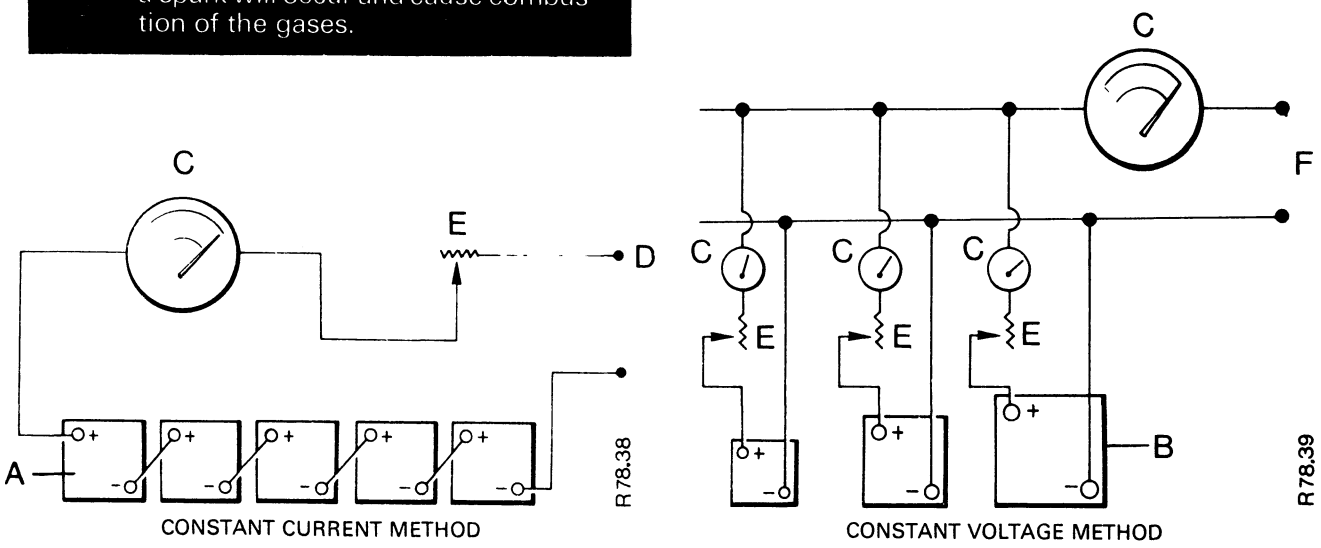

Figure H5
METHODS OF BATTERY CHARGING

A. Batteries connected in series.
B. Batteries connected in parallel.
C. Ammeter.
D. 110 volt DC supply.
E. Resistance.
F. Constant 110 volt DC supply.

NEW BATTERIES

Dry without a charge

Before the battery is given a charge it must be filled with electrolyte of the correct specific gravity.

Specific gravity changes with operating temperature, see FAULT FINDING, page H3. Manufacturers also give instructions with new batteries and these must be followed exactly.

When adding the electrolyte it must be done in two stages to prevent damage to the case. When the acid makes contact with moisture in the plates, heat is generated which can cause the damage.

First, the battery must be approximately half filled and then let it cool for 6–12 hours. Then add electrolyte to the correct level and let it cool for 2 hours. Then give the battery a charge as follows:

Set the charging rate to $\frac{1}{15}$th of the 20 hour rate. Example: Battery 128AH ÷ 15 = 8 amperes charging rate.

The current must be kept constant and not interrupted for the period of the charge. The minimum period is about 48 hours. Check the specific gravity at one hour intervals. When there is not any change after 5 checks following each other, the charge is complete.

Temperatures must not be more than the limits shown in the normal charge section, page H5.

Dry with a charge

These batteries are sent from the manufacturer with a full charge but without the electrolyte. The charge can decrease in storage.

Fill each cell with electrolyte of the correct strength according to the operating temperature. Check the specific gravity of the electrolyte after 20 minutes. The battery can be used immediately if the following conditions are correct.

Specific gravity has not decreased more than 0.010 and temperature has not increased more than 6° Celcius (10° Fahrenheit).

If the conditions are not correct the battery must be given a charge at the normal rate. The charge will be complete when the specific gravity shows no change after 3 checks at one hour intervals.

NOTE: For battery testing and temperature corrections see the FAULT FINDING section, page H3.

ALTERNATOR

HOW IT WORKS

When the starter key A is turned to the 'ACC' position, current from the battery H illuminates the 'no charge' warning lamp B. The current then goes through the slip rings and brushes to the rotor (field windings) C and returns to the battery.

NOTE: The field windings are on the rotor and not on the body as in the dynamo. The name for the stationary windings is stator.

When the rotor turns, the current in the windings generate an AC current in the stator windings F. This is changed into a DC current by the rectifier bridge, it then goes to the battery. The AC voltage is changed by the diode trio E to a DC voltage which is sent to the regulator G. The diode trio also prevents the charge returning from the battery to ground through the alternator. A transistor circuit in the regulator controls the flow of DC current which flows through the rotor. When there is an increase in voltage, there is a decrease in current. When there is a decrease in voltage, there is an increase in current. In this way the regulator controls the output voltage of the alternator to keep the battery charge correct.

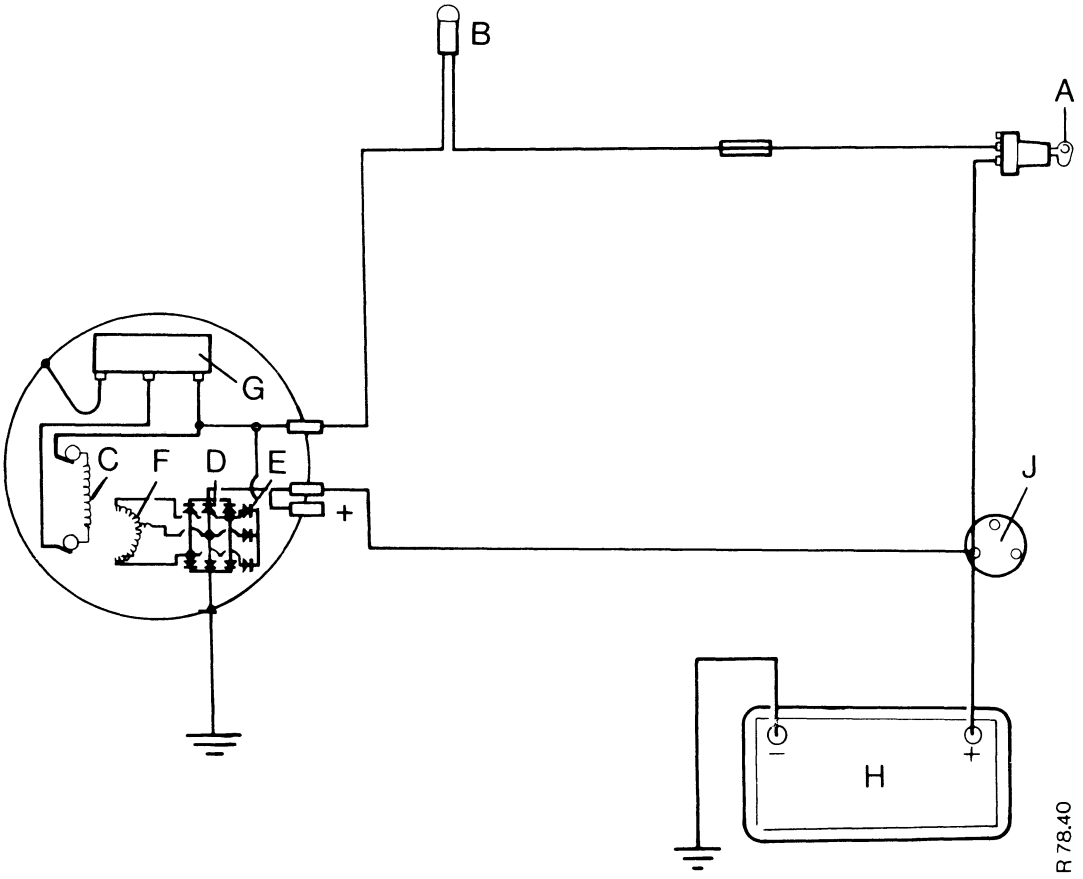

Figure H6
ALTERNATOR CHARGING CIRCUIT

A. Starter key.
B. Warning lamp.
C. Rotor windings.
D. Diodes, rectifier bridge.
E. Diode trio.
F. Stator windings.
G. Regulator.
H. Battery.
J. Solenoid.

FAULT FINDING

LUCAS ALTERNATOR
(see page H13 for AC-Delco)

Equipment Needed

Voltmeter
Ammeter
Jumper wire

Check the condition of the battery before testing the alternator. A battery in good condition must be used.
IMPORTANT: Never disconnect wires when the alternator is running.

Make sure starter switch is in "off" position when the engine is not running. Always check polarity before connecting wires in an alternator circuit, especially battery terminals.

Never run the alternator with the wires disconnected.

Disconnect the alternator if electrical welding is to be done on the tractor.

TEST 1: Drive Belt

Check the belt for wear and damage. If wear or damage is found install a new drive belt.

Check the tension of the drive belt. This must be set to 1cm ($\frac{3}{8}$in) of movement at the position shown in Figure H7 When checking this movement use only medium finger pressure.

A loose drive belt will decrease the efficiency of the alternator, and cause wear to the belt. A tight drive belt will cause damage to the bearings of the alternator.

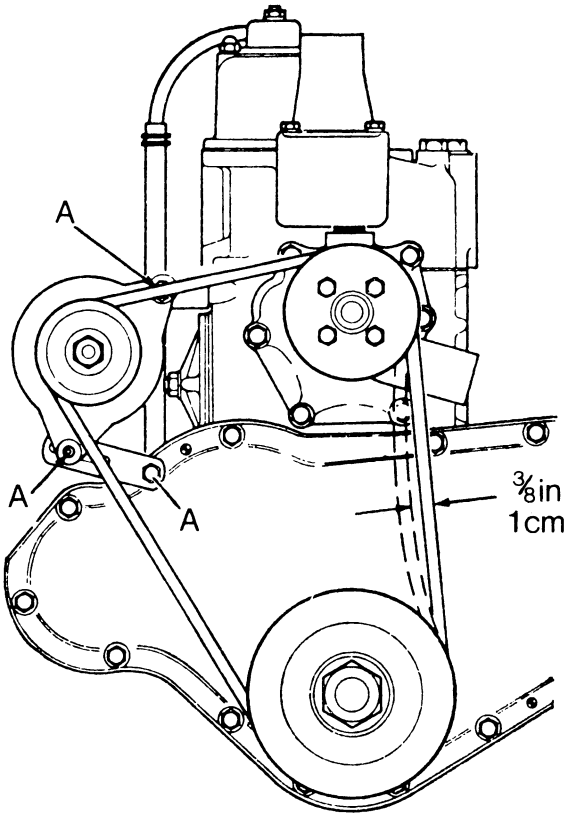

Figure H7
DRIVE BELT ADJUSTMENT
A. Fastening bolts.

TEST 2: Connections

Check that all wires are connected correctly and are clean and tight.

TEST 3: Wires

1. Disconnect the connector plug from the alternator.
2. Turn the starter key to the 'ACC' position.
3. Use a voltmeter to check if battery voltage is reaching the 'IND' (warning lamp) and '+' (positive) connections.
   If the voltmeter does not show any voltage this is an indication that the circuit is broken. Repair before continuing the test.
4. If the voltmeter does not show a voltage at the 'IND' connection, it can be a failure of the warning lamp bulb. Install new bulb.

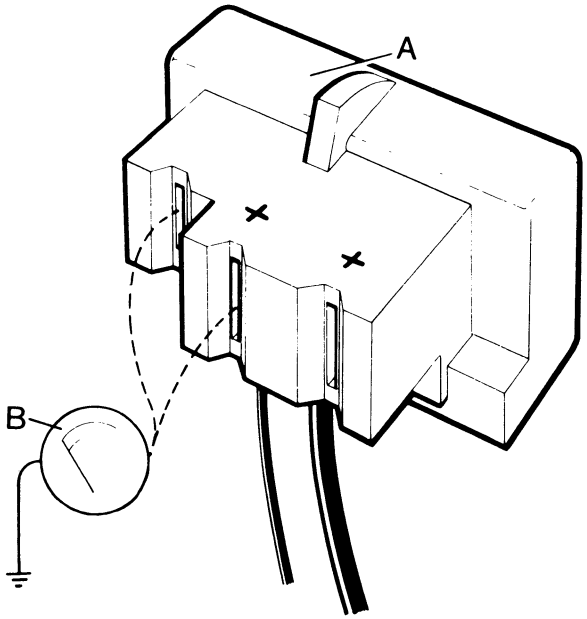

Figure H8
CHECKING FOR SUPPLY AT PLUG
A. Alternator plug. B. Voltmeter.

5. If a voltage is shown at both connections reconnect the plug to the alternator.
6. If the warning lamp illuminates, do the next test.
7. If the lamp does not illuminate, the alternator must be removed and the field circuit checked.

TEST 4: Output

1. Run the engine until normal running temperature is reached.
2. Stop the engine and disconnect the ground cable from the battery.
3. Disconnect the alternator output wire from the solenoid connection.
4. Disconnect the plug from the alternator and remove the plastic cover.
5. Connect an ammeter to the output wire of the alternator and to the solenoid terminal.
6. On Lucas alternators with the 8TRD regulator, connect a jumper wire from the green wire to ground as shown in Figure H10.
7. On Lucas alternators with the 14TR regulator, connect a jumper wire between the case and ground as shown in Figure H11.
8. Reconnect the alternator plug and the battery cable.
9. Turn the starter key to the 'ACC' position. Check that the warning lamp illuminates.

   Start the engine and increase speed slowly. The ammeter will show 28 amperes at 1500 engine r/min if the alternator is working correctly.
10. If the output is less than 28 amperes **stop the engine** and disconnect the surge protection diode. See Figure H12.

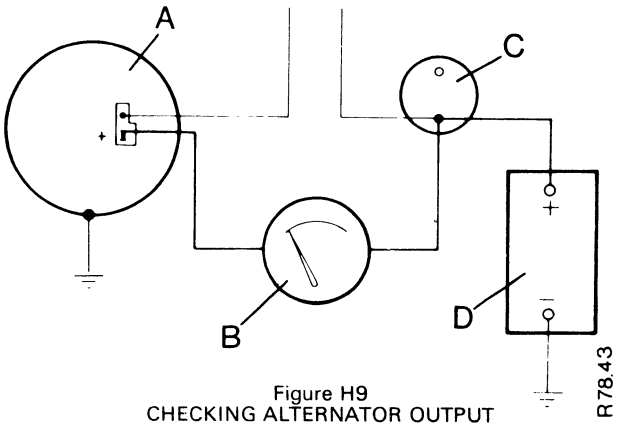

Figure H9
CHECKING ALTERNATOR OUTPUT

A. Alternator. B. Ammeter.
C. Starter solenoid. D. Battery.

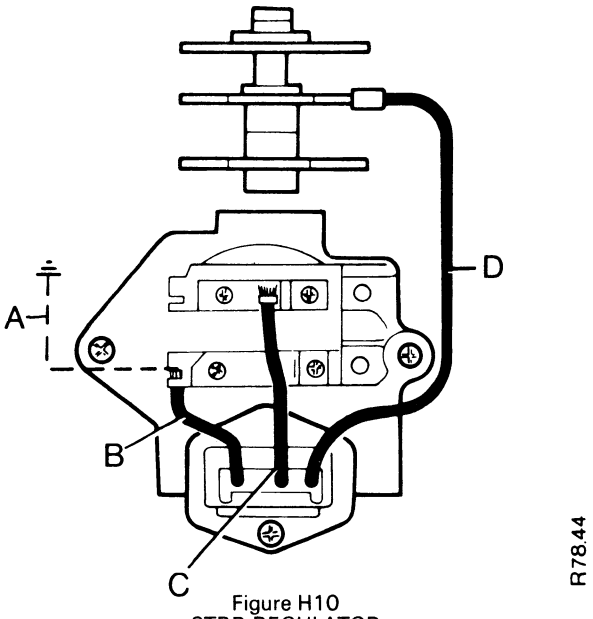

Figure H10
8TRD REGULATOR

A. Jumper wire. B. Green wire.
C. Yellow wire. D. Red wire.

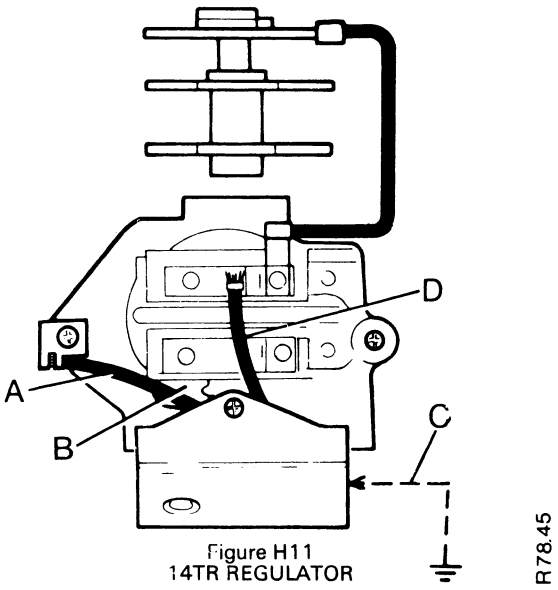

Figure H11
14TR REGULATOR

A. Black wire. B. Field link.
C. Jumper wire. D. Yellow wire.

11. Start the engine again and increase speed to 1500 r/min. If the ammeter now shows 28 amperes, install a new surge protection diode.
12. If the output is still less than 28 amperes after installing the surge diode, remove the alternator. See the MAINTENANCE AND REPAIR section for disassembly and checking procedures.
13. If the output is correct, **stop the engine.** Remove the jumper wire from the regulator. Remove the ammeter and reconnect all connections.

IMPORTANT: Never disconnect or connect wires or test meters to an alternator while it is running. Damage can occur to internal parts.

TEST 5: Circuit Resistance

1. Connect a voltmeter between the alternator output terminal and the battery positive post; **not** to the battery terminal.
2. Put the tractor lighting switch to the main beam position.
3. Start the engine and increase speed to 1500 r/min. The voltmeter must show less than 0.5 volts.
4. Stop the engine and connect the voltmeter between the alternator body and the battery negative post.
5. Start the engine and increase the speed to 1500 r/min. The voltmeter must show less than 0·25 volts.
6. If the voltages are more than these limits; disconnect all connections and clean, especially the battery terminals.

   Make sure all connections are tight when reconnected.
7. Repeat steps 1 to 5.

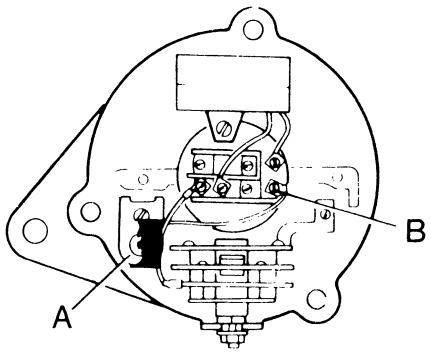

Figure H12
DISCONNECTING SURGE PROTECTION DIODE
A. Surge protection diode. B. Diode connection.

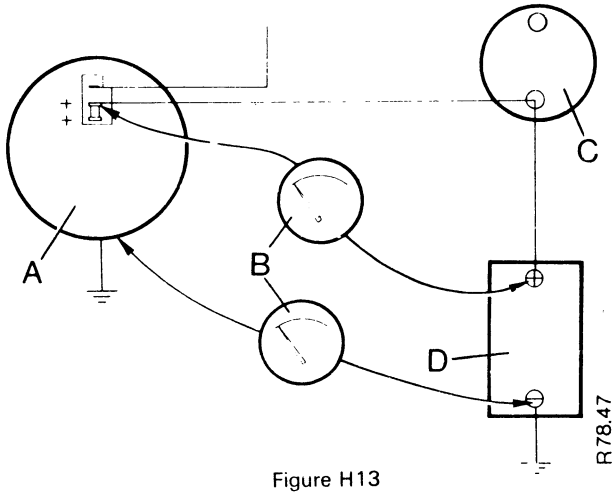

Figure H13
CHECKING RESISTANCE IN THE CIRCUIT
A. Alternator. B. Voltmeter.
C. Solenoid. D. Battery.

TEST 6: Regulator Setting

Make sure the battery is in good condition with a full charge before doing this test.

1. Disconnect the ground cable from the battery.
2. Disconnect the alternator output wire from the alternator and starter solenoid.
3. Connect an ammeter between the alternator and the starter solenoid to those connections.
4. Connect a voltmeter between the battery terminals and reconnect the ground cable to the battery.
5. Start the engine and increase the speed to 1500 r/min. When the ammeter shows less than 10 amps read the voltmeter. The voltmeter must show between 13.6 to 14.4 volts. If the voltage is not between these voltages install a new regulator.
6. Stop the engine and reconnect all connections if voltages are correct.

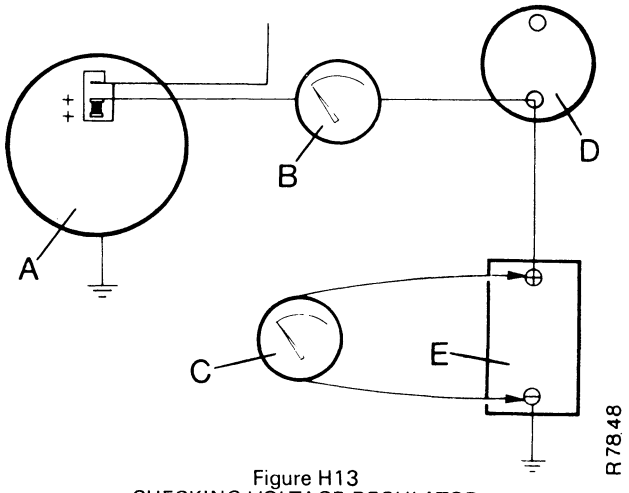

Figure H13
CHECKING VOLTAGE REGULATOR

A. Alternator.
B. Ammeter.
C. Voltmeter.
D. Solenoid.
E. Battery.

FAULT FINDING

(See page H9 for Lucas)

AC-DELCO ALTERNATOR

TEST 1: Engine Stopped: Switch 'OFF' Lamp Illuminated

1. Disconnect the wire from the starter switch A to the warning lamp B.

(a) If the lamp stops illuminating, check the switch and replace with a new switch if necessary.

(b) If the lamp still illuminates with the switch wire disconnected, disconnect the 'IND' wire from the alternator C.

(c) If the lamp still illuminates, check for a connection between the 'IND' and '+' wires.

(d) If the lamp stops illuminating when the 'IND' wire is disconnected install a new rectifier bridge.

2. Check that the lamp now operates correctly and check the condition of the battery after tests.

TEST 2: Engine Stopped: Switch 'ON' Lamp Not Illuminated

1. Disconnect the wire from the 'IND' terminal of the alternator and connect it to a good ground.

(a) If the lamp does not illuminate; check lamp, bulb socket, wires and fuses.

(b) If the lamp illuminates; install a new wire between the 'IND' terminal and the warning lamp.

2. Put the special rod shown in Figure H16 in through the test hole C shown in Figure H17.

(a) If the lamp illuminates, install a new regulator and check the rotor windings. See REPAIR section.

(b) If the lamp does not illuminate, check the 'IND' terminal connections. Check the brushes, slip rings, and field windings for an open circuit if the connections are correct. See REPAIR section.

3. If all these parts are found in good condition, install a new rectifier bridge.

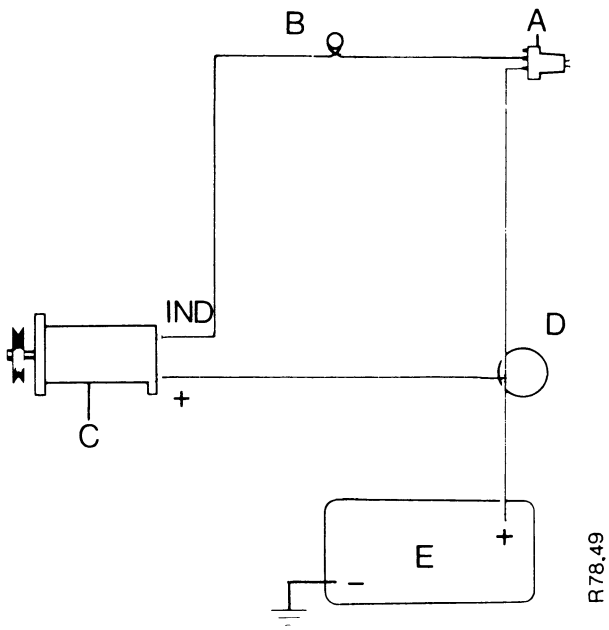

Figure H15
ALTERNATOR CIRCUIT

A. Starter switch.
B. Warning lamp.
C. Alternator.
D. Solenoid.
E. Battery.

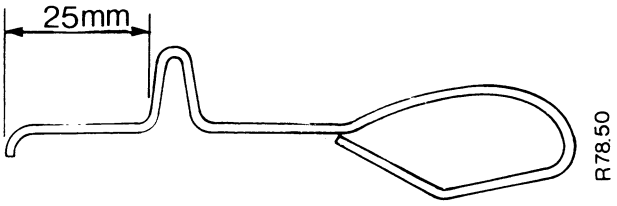

Figure H16
TOOL FOR CONNECTING BRUSH HOUSING TO GROUND
Make from welding rod

TEST 3: Engine Running, Switch 'ON' Lamp Illuminated

1. Check the tension of the drive belt. Adjust if necessary.
2. Make sure all connections are clean and tight.
3. Check for broken wires.
4. Turn the starter key to 'ACC' and connect a voltmeter from the alternator ' + ' terminal A to a good ground.

(a) If the voltmeter shows zero, check for a broken circuit between the battery and the alternator ' + ' terminal.

5. Connect a voltmeter from the alternator 'IND' terminal B to a good ground.

(a) If the voltmeter shows zero, check for a broken circuit between the battery and the 'IND' terminal.

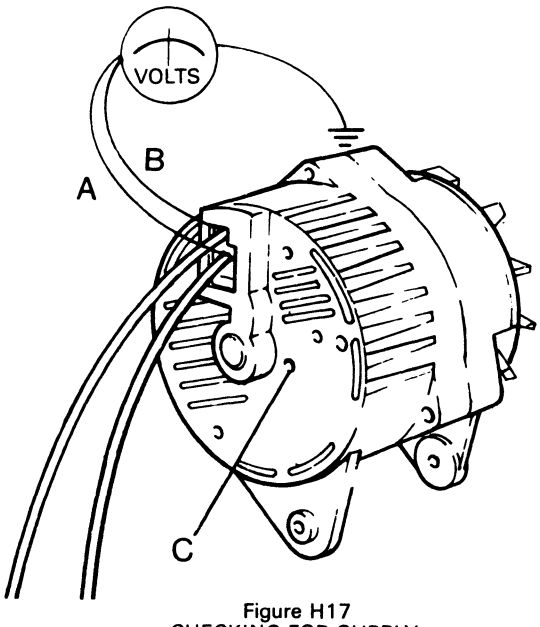

R78 51

Figure H17
CHECKING FOR SUPPLY

A. Positive terminal.
B. 'IND' terminal.
C. Test hole.

MAINTENANCE AND REPAIR

LUCAS ALTERNATOR

(see page H21 for AC-Delco)

The alternator is of the machine sensed type, complete with an internal regulator. All the inside connections are soldered.

IMPORTANT:
Never connect or disconnect wires in the alternator circuit when the alternator is running. Make sure the starter switch is in the 'OFF' position when the engine is not running.

Always check the polarity before connecting wires in the alternator circuit, especially the battery terminals.

Never run the alternator with the wires disconnected.

Disconnect the alternator if electrical welding is to be done on the tractor.

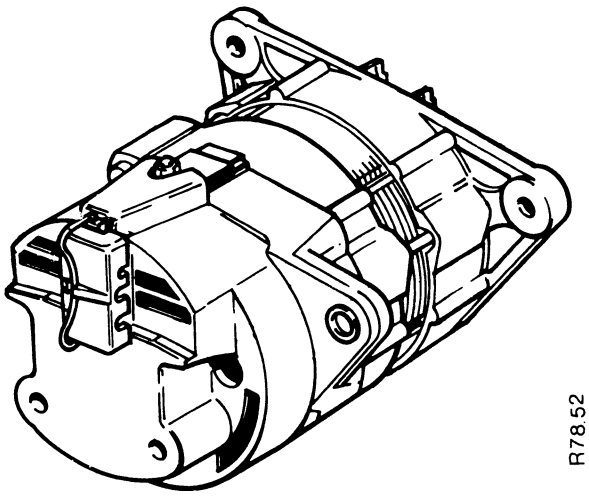

R78.52

Figure H18
LUCAS ALTERNATOR

Equipment Needed

Soldering iron.
Hammer.
Voltmeter.
Pliers (long nose).
Piece of steel tube.
Glass paper.
Ammeter.

MAINTENANCE

1. Check the tension of the drive belt every 125 and 500 hours. Make sure the adjustment is correct or damage will occur, see page H9, FAULT FINDING.
2. Make sure all connections are clean and tight and connected correctly.
3. Check the tightness of the bolts A which fasten the alternator to the engine.

NOTE: The bearings are filled with lubricant by the manufacturer and need no maintenance.

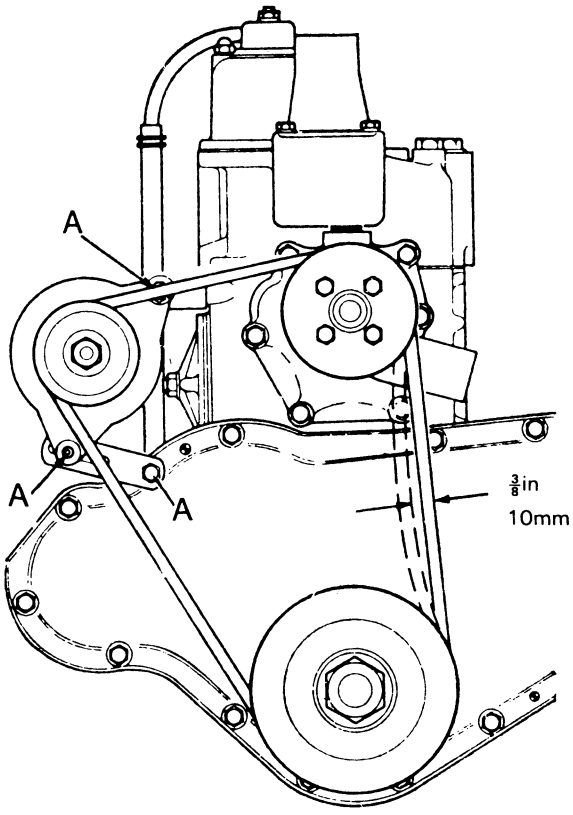

R78.64

Figure H19
DRIVE BELT ADJUSTMENT
A. Fastening bolts.

DISASSEMBLY

(Figure H20)

1. After the alternator has been removed from the tractor, remove the two screws A from the end cover J. Remove the cover.
2. Use a soldering iron to disconnect the three connections B which connect the stator N to the rectifier R. Use a pair of long nose pliers on the diodes as shown in Figure H25. This will prevent heat causing damage to the diodes. Make a note of the wire positions for correct assembly.
3. Remove the two screws which fasten the brush holder to the regulator P.
4. Loosen the nut C of the rectifier ground bolt.
5. Remove the screw D which fastens the regulator to the end frame K.
6. Remove the brush holder S and rectifier R together complete with wire.
7. Remove the three bolts E which hold the two halves of the alternator together.
8. Make a mark across the junction of the two halves before separating to make sure of correct assembly.
9. Use a piece of steel tube which will just go over the slip-ring moulding F. Put the end of the tube on the outer ring of the bearing G. Carefully remove any solder which causes a restriction to the tube, with a file.
10. Hold the alternator with the drive pulley H down. Carefully hit the tube to push the bearing out of the slip-ring end frame. Make sure the drive end has some support when doing this operation.
11. Remove the drive pulley nut T, washer U, pulley H, fan V and key.
12. Push the rotor M out of the drive end frame L.

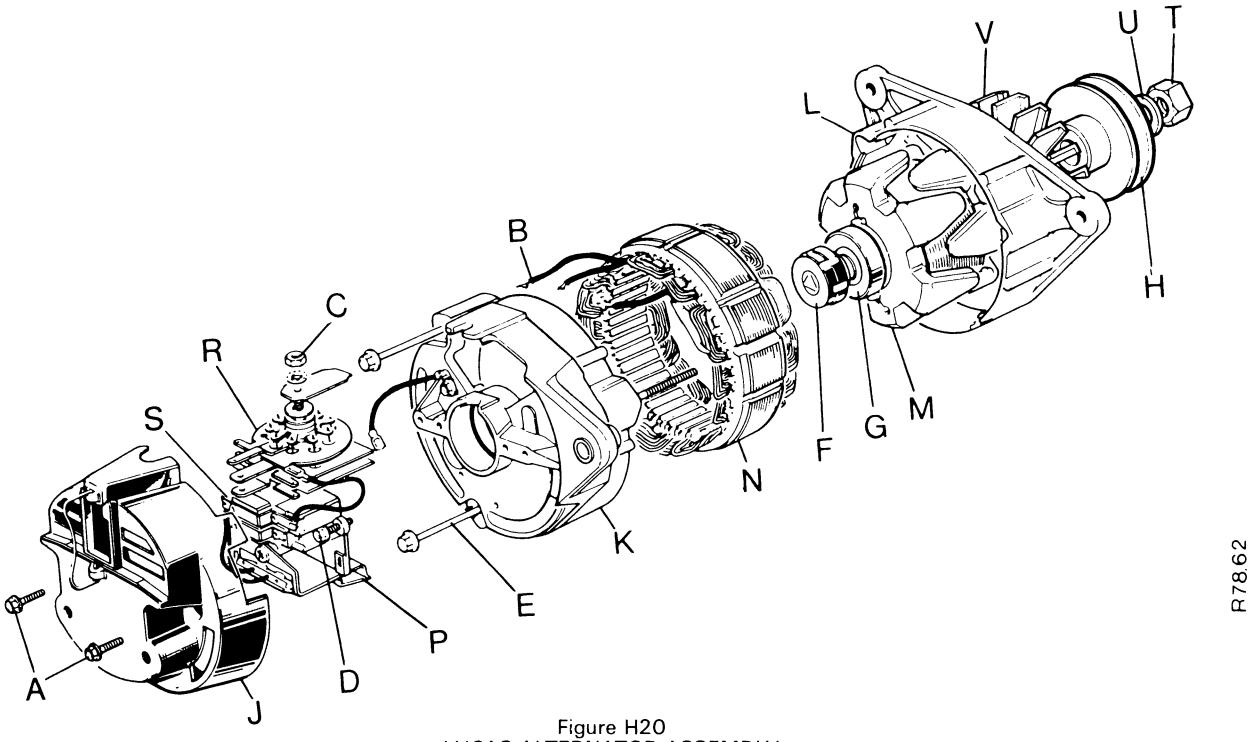

Figure H20
LUCAS ALTERNATOR ASSEMBLY

A. Screws, end cover.
B. Stator connections.
C. Nut, rectifier ground.
D. Screw, regulator.
E. Through bolt.
F. Slip-ring moulding.
G. Rear bearing.
H. Pulley.
J. Plastic cover.
K. Slip-ring end frame.
L. Drive end frame.
M. Rotor.
N. Stator.
P. Regulator.
R. Rectifier.
S. Brush holder.
T. Pulley nut.
U. Washer.
V. Fan.

TEST AND REPAIR

Brushes

1. Measure the amount that the brushes show out of the holder.
2. If this measurement is less than 8mm ($\frac{3}{10}$in), install new brushes.
3. When installing new brushes, make sure the small leaf spring at the side of the inner brush does not get lost.
4. Use a push type gauge to check the brush spring pressures as follows: Push the brush into the holder until the end of the brush is level with the holder. The gauge will show between 255–368g (9–13oz) if the springs are in good condition.
5. If the pressure is less than 255g (9oz), install new springs.
6. If the pressure is more than 368g (13oz), check for a restriction of the brushes in the holder. Clean the brushes with a small amount of petrol on a cloth or carefully with a smooth file. DO NOT use emery or similar abrasives.

Rotor

1. Connect an ohmmeter or a 12volt battery and an ammeter between the slip-rings. The resistance of the windings must be as follows:
   pink windings: 4.3 ohms or
   2.8 amperes.
   purple windings: 3.3 ohms or
   3.6 amperes.
2. Use a 110volt AC supply to check the insulation. Connect a 15 watt test lamp between the slip-rings and the poles as shown. If the lamp illuminates, install a new rotor.

NOTE: The poles must not be machined. DO NOT try to correct any distortion of the shaft; install a new rotor.

Slip-rings

1. Clean any dirt, oil or grease from the slip-ring surfaces with a small amount of petrol on a cloth.
2. Remove scratches or other surface damage with smooth glass paper. DO NOT use emery cloth, similar abrasive or a machine for this purpose.

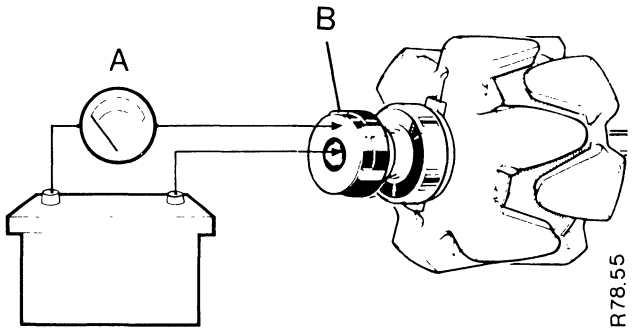

Figure H21
CHECKING ROTOR WINDING RESISTANCE
A. Ammeter. B. Slip-rings.

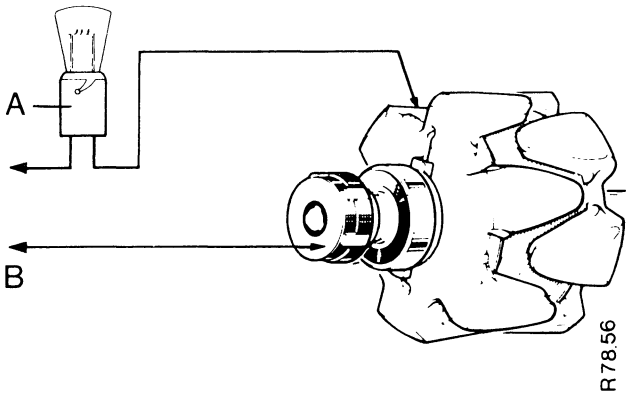

Figure H22
TESTING INSULATION OF ROTOR WINDINGS
A. 15W test lamp. B. 110 volt supply.

Diodes

Disconnect all the diodes with a soldering iron and proceed as follows:
NOTE: Use a pair of pliers to remove the heat away from the diodes, see Figure H25.

1. Connect one of the nine diodes in series with a 1.5 watt test lamp and 12volt battery. See Figure H24.
2. Connect the other battery terminal to the heat sink to which the diode being tested is fastened. Make a note of the results.
3. Now change the connections with each other. If the lamp shows the same result install a new rectifier assembly. The lamp must only illuminate in one direction.
4. Repeat 1 to 3 on all nine diodes.
5. Check the surge protection diode in the same way. The lamp must only illuminate when connected in one way.

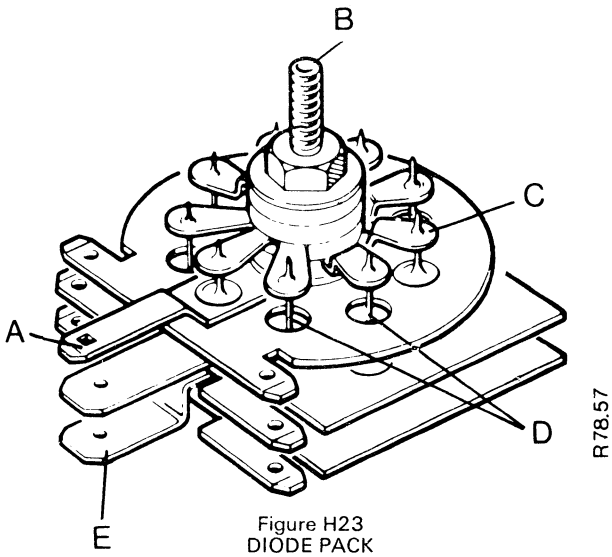

Figure H23
DIODE PACK

A. Ind connection.
B. Earth connection.
C. Field diode.
D. Output diode.
E. Positive (+) connections.

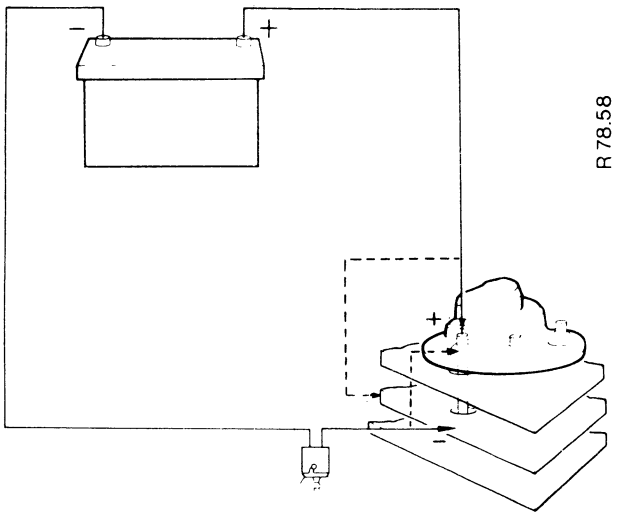

Figure H24
CHECKING DIODE

IMPORTANT: When using the soldering iron to connect or disconnect the diodes use pliers as shown to remove the heat. Use only 'M' grade solder (45–55 tin-lead) with resin core and do the job as fast as possible.

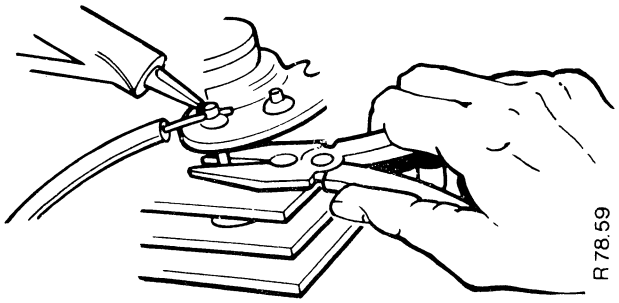

Figure H25
APPLYING SOLDER TO DIODE CONNECTION

Stator

Use a 12volt battery and a test lamp of not less than 36 watts to check the windings.

1. Connect the test lamp between any two of the windings, as shown.
2. Repeat the test on all connections. Failure of the lamp to illuminate is an indication of a broken circuit. Install a new stator.

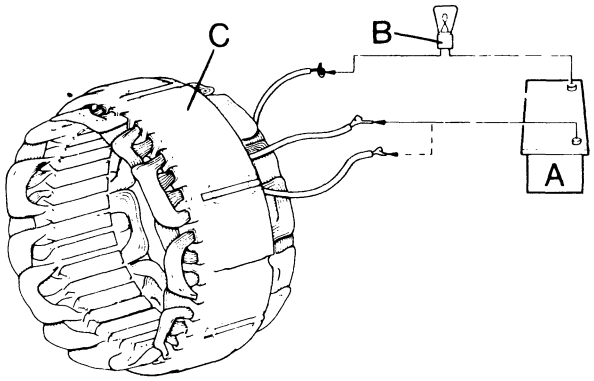

Figure H26
CHECKING CONTINUITY OF STATOR WINDINGS

A. 12volt battery.
B. Test lamp, 36 watt.
C. Stator.

Use a 110volt AC supply and a 15 watt test lamp to check the stator insulation as follows:

1. Connect the lamp between any one of the wires and the laminations as shown.
2. Repeat on the other two wires. If the lamp illuminates there is a failure in the stator windings. Install a new stator.

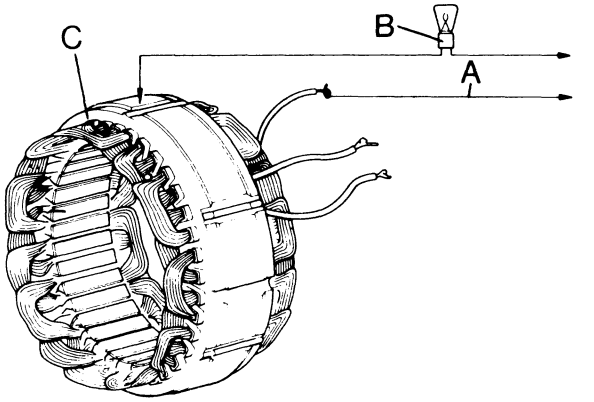

Figure H27
TESTING INSULATION OF STATOR WINDINGS

A. Supply of 110 volts AC.
B. Test lamp, 15 watt.
C. Stator laminations.

BEARING REPLACEMENT

Slip-ring End
Figure H28.

1. Use a soldering iron to disconnect the slip-ring wires. Remove the slip-ring moulding F from the rotor shaft.
2. Pull the bearing G from the shaft with an acceptable puller.
3. Clean the shaft and position the new bearing with the shield nearest the slip-ring moulding.
4. Push the bearing on to the shaft as far as it can go.
5. Install the slip-ring moulding and use 'M' grade solder to reconnect the rotor winding wires.

Drive End
1. Remove the circlip and push the bearing out of the drive end frame.
2. Press the new bearing into the end frame. Fit the circlip and make sure it has fully entered the groove all the way round.

ASSEMBLY
Figure H28

Assemble the alternator in the opposite sequence to disassembly. Make sure the following instructions are followed when assembling.
1. Push the bearing G at the slip-ring end on to the shaft as far as it can go.
2. Put the brushes into the holder before installing the holder in the alternator.
3. Use a steel tube as a support on the inner ring of the drive end bearing. Install the rotor. DO NOT use the drive-end frame as a support when installing the rotor.
4. Tighten the three bolts E which hold the two halves of the alternator together, to 75Nm (8kgm) (55lb in).

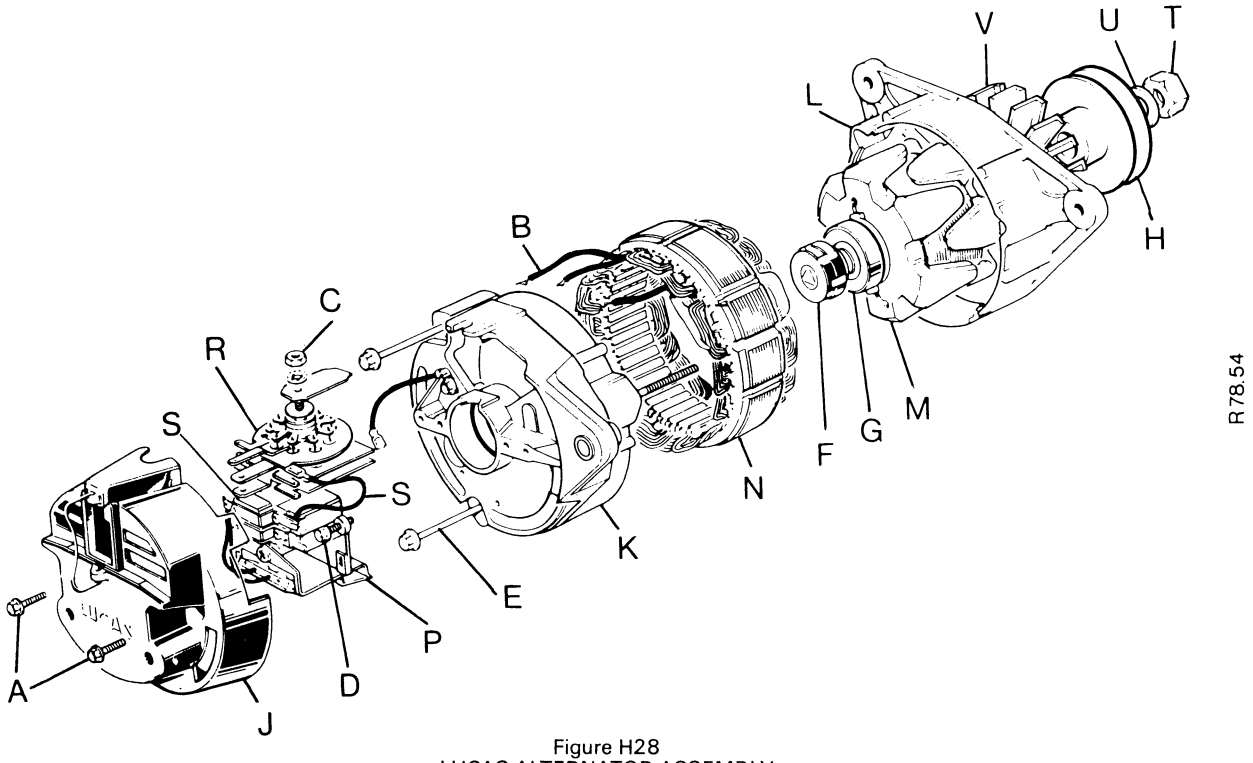

Figure H28
LUCAS ALTERNATOR ASSEMBLY

A. Screws, end cover.
B. Stator connections.
C. Nut, rectifier ground.
D. Screw, regulator.
E. Through bolt.
F. Slip-ring moulding.
G. Rear bearing.
H. Pulley.
J. Plastic cover.
K. Slip-ring end frame.
L. Drive end frame.
M. Rotor.
N. Stator.
P. Regulator.
R. Rectifier.
S. Brush holder.
T. Pulley nut.
U. Washer.
V. Fan.

MAINTENANCE AND REPAIR

AC-DELCO ALTERNATOR

(see page H15 for Lucas)

The alternator is of the machine sensed type complete with regulator. All internal connections are fastened by screws or nuts and easily removed.

IMPORTANT

Never connect or disconnect wires in the alternator circuit when the alternator is running. Always make sure the starter switch is in the 'OFF' position if the engine is not running.

Always check the polarity before connecting wires in the alternator circuit, especially battery terminals.

Never run the alternator with the wires disconnected.

Disconnect the alternator if electrical welding is to be done on the tractor.

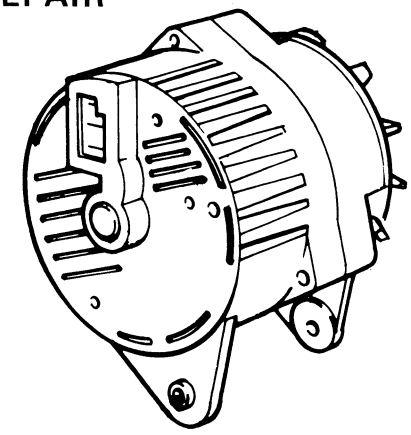

R78.63

Figure H29
AC-DELCO ALTERNATOR

EQUIPMENT NEEDED

$\frac{15}{16}$ AF and 8mm open end spanners.
$\frac{5}{16}$in Allen key.
$\frac{9}{16}$ AF, 8mm and 10mm sockets.
Pozidriv screwdriver.
Long nose pliers.
Ohmmeter and test lamp.
Hammer and punch.

MAINTENANCE

1. Check the drive belt tension every 125 and 500 hours.
2. Keep the alternator clean, especially around the connections.
3. Check the tightness of the bolts A which fasten the alternator to the engine.
4. Make sure all electrical connections are clean, tight and connected correctly.

NOTE: The bearings are filled with lubricant by the manufacturer and do not need maintenance.

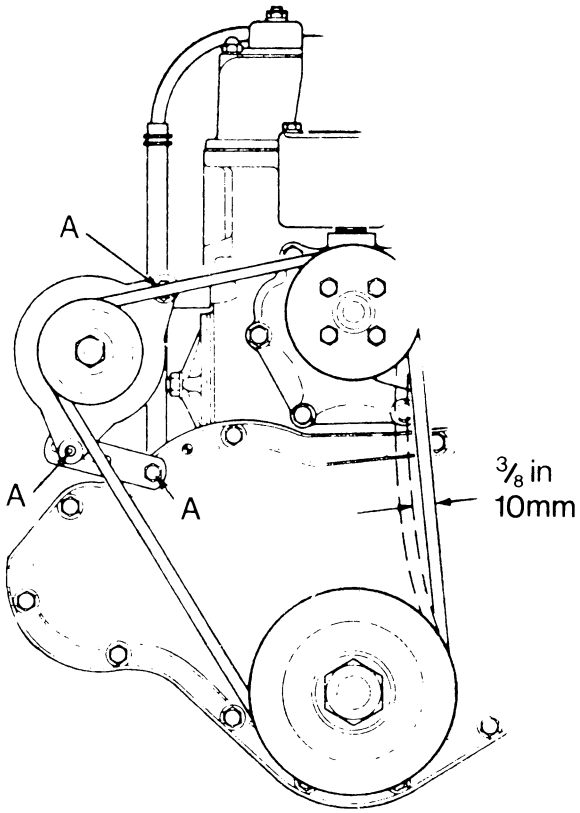

R78.53

Figure H30
DRIVE BELT ADJUSTMENT
A. Fastening bolts.

DISASSEMBLY

Slip-Ring end

1. Make a mark across the junction of the two halves of the alternator. This will make sure the halves are assembled in the same position.
2. Remove the three bolts which hold the two halves together.
3. Carefully separate the two halves and look for the brush springs which can fall out.
4. Put a piece of tape over the bearing A in the slip-ring end frame B. This will prevent dirt from entering.
5. Put a piece of tape on the bearing surface of the rotor shaft to give it protection from damage.
6. Remove the three nuts C which hold the stator wires to the rectifier bridge D.
7. Carefully remove the stator from the end frame. Put the stator on the bench with the terminal lugs up.
8. Use an ohmmeter to check the insulation of the diode trio E before removing it. Connect the ohmmeter between the link F and the frame B. If the ohmmeter shows a low resistance then a new fastening screw G must be installed when assembling.
9. Remove the Pozidrive screw G holding the diode trio E and remove the diode trio.
10. Use an ohmmeter to check the insulation of the screw H holding the brush assembly.
    Connect the ohmmeter between the brush assembly clip and the frame B. If a low resistance is shown, install a new screw H when assembling.
11. Remove the Pozidrive screw H holding the brush assembly and remove the brush assembly J.
12. Remove the two screws K and L holding the rectifier bridge and remove the rectifier bridge D.
13. Remove the Pozidrive screw M holding the regulator N and remove the regulator.

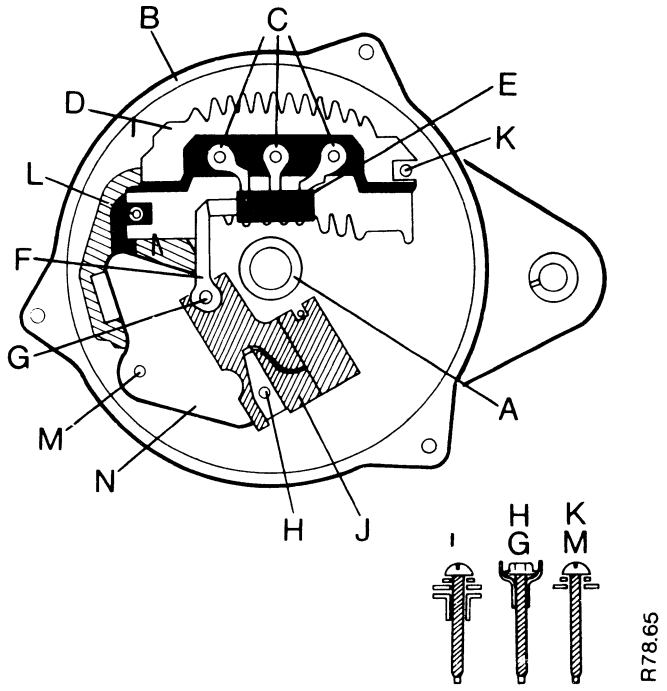

Figure H31
SLIP-RING END FRAME

A. Bearing, roller type.
B. Frame, slip-ring end.
C. Rectifier terminals.
D. Rectifier bridge.
E. Diode trio.
F. Link, diode trio.
G. Diode trio screw, with insulation.
H. Brush holder screw, with insulation.
J. Brush holder.
K. Rectifier screw.
L. Rectifier screw, with insulation.
M. Regulator screw.
N. Regulator.

Drive End

1. Put a $\frac{5}{16}$in Allen Key in the drive end of the rotor shaft A to prevent it from turning. Use a $\frac{15}{16}$ AF spanner to loosen the pulley nut B.
2. Remove the nut B, washer C, pulley D, fan E and outer spacer F from the rotor shaft.
3. Carefully remove the rotor G from the end frame H. Remove the inner spacer J from the rotor shaft.

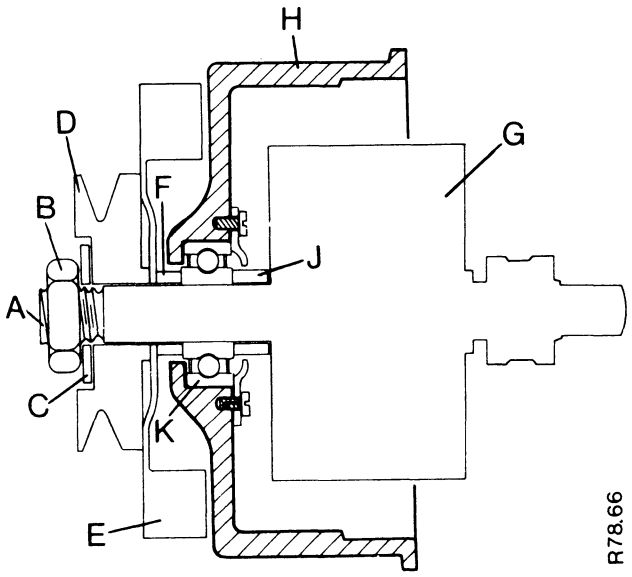

Figure H32
DRIVE END FRAME

A. Shaft.
B. Nut.
C. Washer.
D. Pulley.
E. Fan.
F. Outer spacer.
G. Rotor.
H. End Frame.
J. Inner spacer.

TEST AND REPAIR

NOTE: Test procedures for the stator, rotor and slip-rings are the same as for the Lucas alternator.

Rectifier Bridge

Use a ohmmeter or test lamp to check the rectifier bridge in the following way.

1. Connect the positive wire of the test equipment to the insulated heat sink A.
2. Connect the negative wire of the test equipment to each terminal C of the rectifier, one at a time. Make a note of each result.
3. Now connect the negative wire to the heat sink A and the positive wire to the terminals C. Make a note of each result.
4. Install a new rectifier bridge if the same result is shown when the wires are connected in both ways.
5. Repeat steps 1 to 4 on the heat sink B which has no insulation.

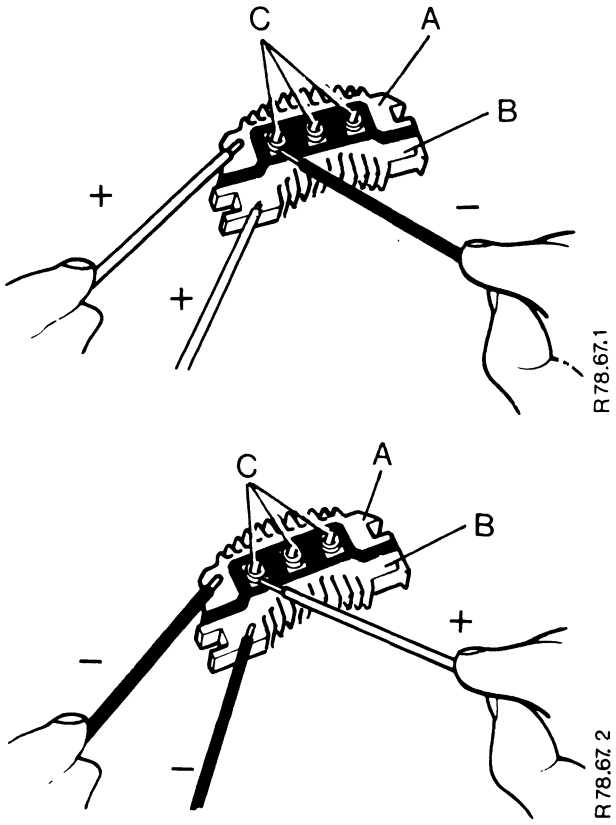

Figure H33
TESTING THE RECTIFIER BRIDGE

A. Heat sink with insulation.
B. Heat sink with no insulation.
C. Terminals.

Diode Trio

Use the following method to test the diode trio.

1. Connect the positive wire of the test equipment to the brush holder connection A. Now connect the negative wire to each of the three rectifier connections B. Make a note of each result.
2. Now connect the negative to the brush holder connection A and the positive to each of the other wires B. Make a note of each result.
3. Install a new diode trio, if any connection shows the same result when connected in both ways.

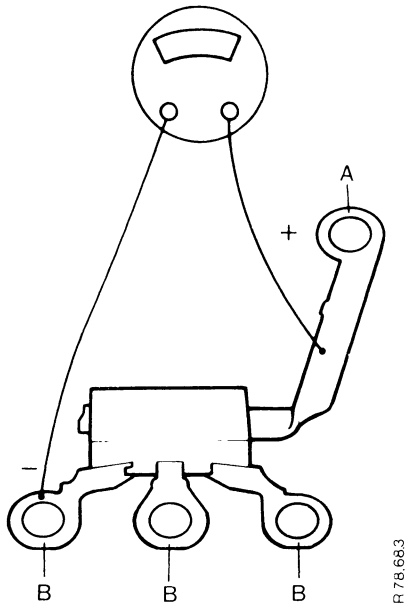

Figure H34
TESTING THE DIODE TRIO
A. Brush holder connection.
B. Rectifier connections.

Brushes

1. Remove the brushes from the holder.
2. Measure the length of the brushes. Install new brushes if less than 10mm.
3. Clean the brushes with a small amount of petrol on a cloth before installing into the holder.
4. Get a pin, approximately 2.38mm x 50mm ($\frac{3}{32}$in x 2in) and made of a material which is not a conductor. Push the brushes down into the holder. Put the pin through the hole in the holder to hold the brushes down. The pin is removed after the alternator has been completely assembled.

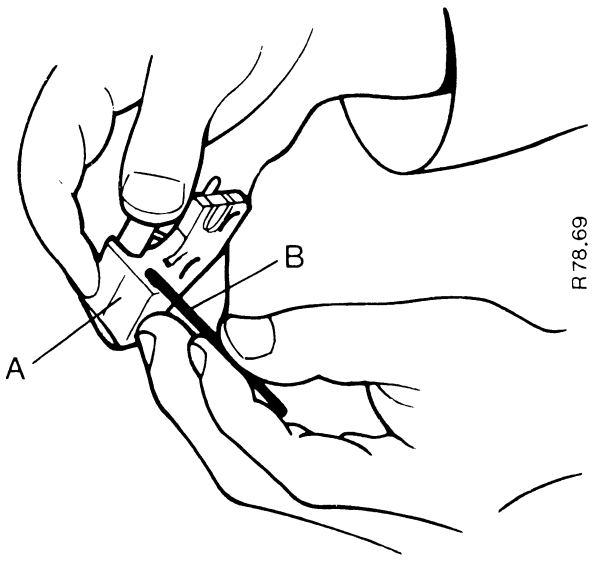

Figure H35
INSTALLING THE BRUSHES
A. Brush holder.
B Pin, made of a material which is not a conductor

Regulator

To check the regulator it must be connected into a circuit with a variable DC voltage. Use a supply with a maximum of 18 volts.

1. Make a test circuit as shown in Figure H36.
2. Set the supply voltage D to 10 volts. Check the voltmeter E; if showing 1.5 volts continue with test. If showing 10 volts, install a new regulator.
3. Set the supply voltage D to between 14 and 15.5 volts. Check the voltmeter E; if showing supply voltage continue with test. If showing a different reading, install a new regulator.
4. Decrease the supply voltage D until the voltmeter E shows 1.5 volts. Check the supply voltage; it will be between 14.2 and 15.1 volts if the regulator is working correctly.

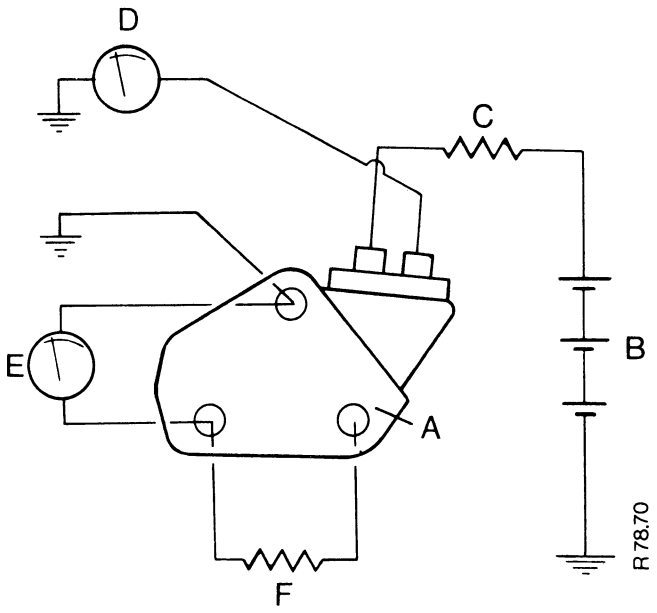

Figure H36
REGULATOR TEST CIRCUIT
A. Regulator.
B. 18 volt supply DC.
C. Variable resistor.
D. Supply voltmeter.
E. Output voltmeter.
F. Resistor, 3 ohms 5 amp capacity.

BEARING REPLACEMENT

Slip-ring End

1. Use a piece of steel tube A 50mm (2in) in diameter as a support for the inside of the frame.
2. Use a piece of steel tube D with an outside diameter of 16.6mm ($\frac{21}{32}$in). Push the bearing out of the frame from the outside.
3. Heat the frame B to about 50° Celcius. Push the new bearing C into the frame from the outside until it is level with the frame.
4. Put tape on the bearing to stop dirt entering. Remove when ready for assembling.

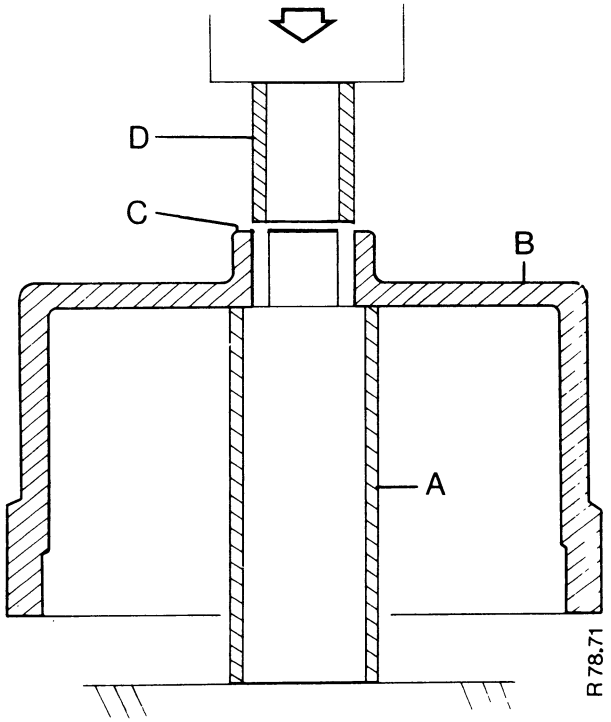

Figure H37
REMOVING AND INSTALLING SLIP-RING END BEARING
A. 50mm (2in) steel tube.
B. End frame.
C. Roller bearing.
D. 16.6mm ($\frac{21}{32}$in) steel tube.

Drive End

1. Remove the three screws from the retainer plate which keeps the bearing in place. Remove the plate.
2. Use a piece of steel tube A 50mm (2in) diameter as a support on the inside of the frame.
3. Using a piece of steel tube B the same size as the inner ring of the bearing. Push the bearing out of the frame, from the outside of the frame.
4. Heat the frame to about 50° Celcius. Using a piece of tube C the same size as the outer ring of the bearing. Push the new bearing into the frame, with the tube, from the inside of the frame.

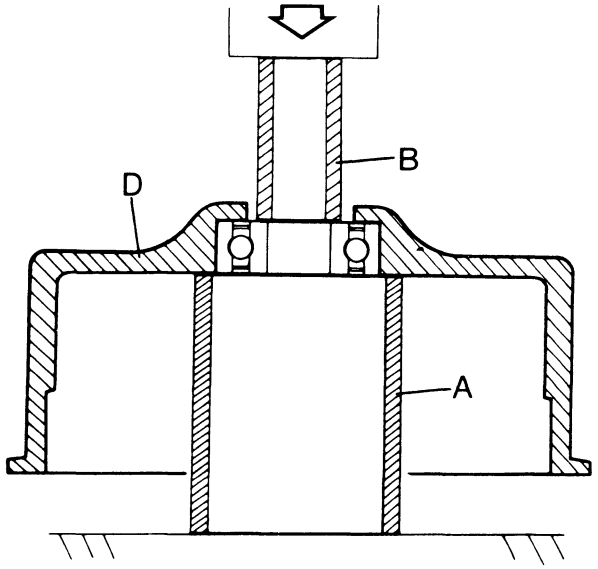

R78.72

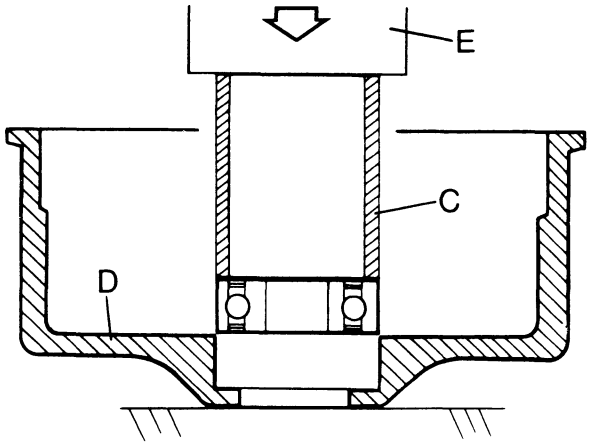

R78.73

Figure H38
REMOVING AND INSTALLING DRIVE END BEARING
A. 50mm (2in) steel tube.
B. Steel tube, same size as bearing inner ring.
C. Steel tube, same size as bearing outer ring.
D. Drive end frame.
E. A press.

ASSEMBLY
Slip-ring End

1. Fasten the regulator N loosely into position with the screw M which has no insulation.
2. Install the insulation sleeve P to the rectifier bridge D.
3. Install the rectifier bridge into the frame. Align the terminals in the centre of the terminal opening. Install and tighten the screws L and K.
4. Put the brush holder J on to the regulator. Make sure the pin R which holds the brushes in place, goes through the hole in the end frame.
5. Install the insulated screw H but do not tighten.
6. Install the diode trio E and the other insulated screw G but do not tighten.
7. Move the brush holder towards the outside of the frame and tighten the screws. Now tighten the regulator screw M.
8. Put the stator into the frame. Connect the three wires to the rectifier and tighten the nuts. Make sure the three terminals C are not making contact with the heat sink. Bend clear if necessary.
9. Remove the tape from the bearing in the end frame and from the rotor shaft. Clean off any deposit remaining.

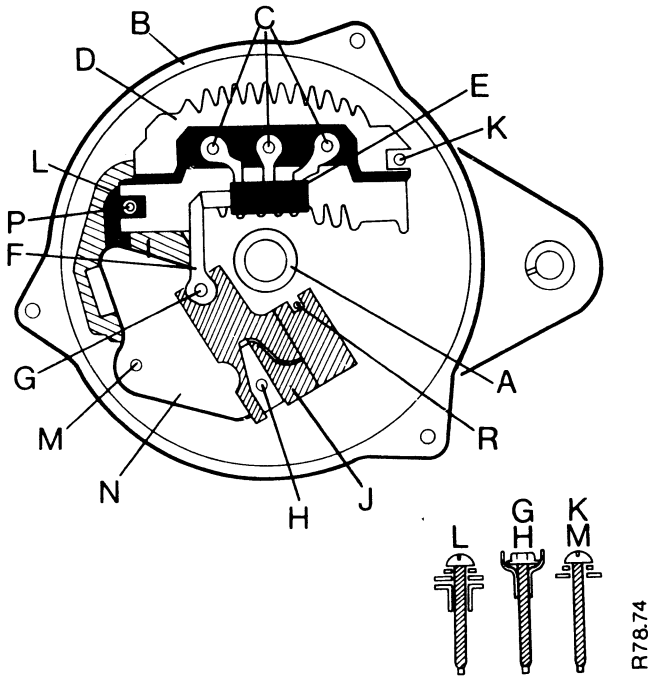

Figure H39
SLIP-RING END FRAME

A. Bearing.
B. Frame.
C. Terminals of rectifier.
D. Rectifier.
E. Diode trio.
F. Diode trio link.
G. Screw with insulation.
H. Screw with insulation.
J. Brush holder.
K. Rectifier screw, without insulation.
L. Rectifier screw, with insulation.
M. Regulator screw, without insulation.
N. Regulator.
P. Insulation sleeve.
R. Pin, brushes.

Drive End

1. Clean all the parts.
2. Put the larger of the two spacers J on the drive end of the rotor shaft A. Make sure the chamfer is towards the end of the shaft.
3. Install the rotor G into the end frame bearing K.
4. Put the outer spacer F on the armature shaft.
5. Put the fan E, pulley D, washer C and nut B on to the shaft in that sequence.
6. Tighten the pulley nut B to a torque of 54–80Nm (5.5–8.3kgm) (40–60lbft).
7. Make sure the slip-rings are clean, then enter the rotor shaft into the slip-ring frame bearing.
8. Align the marks made on the two halves of the frame and push the halves together.
9. Install the three bolts which hold the two halves together and tighten to a torque of 40–68Nm (4–7kgm) (30–50lbin).
10. Remove the pin R, Figure H39, which is holding the brushes into the holder.

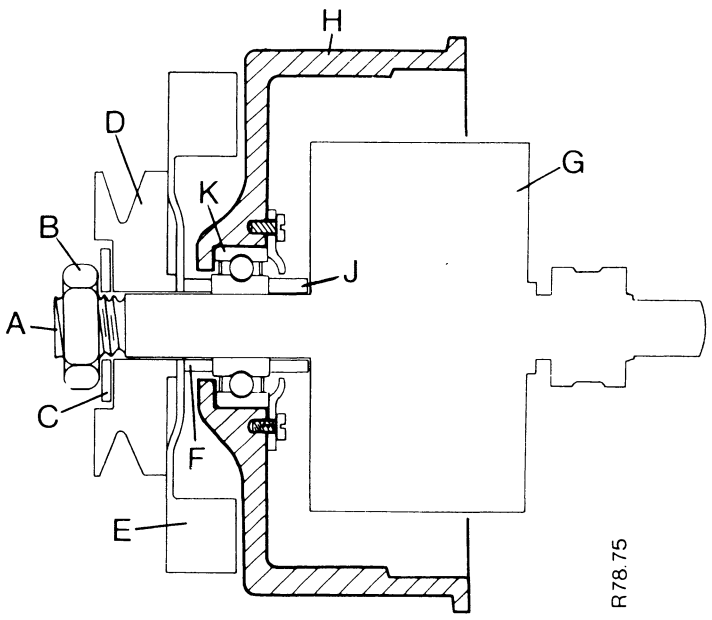

Figure H40
DRIVE END FRAME

A. Shaft.
B. Nut.
C. Washer.
D. Pulley.
E. Fan.
F. Outer spacer.
G. Rotor.
H. End Frame.
J. Inner spacer.
K. Bearing.

DYNAMO

HOW IT WORKS

When the starter key A is turned to the ACC position the 'no charge' warning lamp J is illuminated. Battery current goes through the brushes and armature windings B to ground.

When the engine is started a current is generated in the armature windings. This is caused by the armature turning in a magnetic field made by the field magnets C. The current goes from the armature to the field windings. This current in the field winding increases the strength of the magnetic field. The effect is to increase the armature current. Both currents increase with armature speed. When the armature output reaches 13 volts the cut-out contacts D of the regulator close. This connects the dynamo to the battery and charging starts. When the output decreases to 12 volts the contacts open to prevent the current returning through the dynamo.

When the dynamo output voltage increases the voltage difference at the warning lamp terminals decreases. This causes the lamp to stop illuminating.

The maximum output of the armature is regulated by another set of contacts E. These open, at a set maximum and interrupts the current to the field windings. Field current decreases causing armature current to decrease and the contacts close again. All this occurs at a fast rate, keeping output limited to a set amount. Charging current is controlled by the battery charge condition. A discharged battery will take a high rate of charge. A charged battery will take a low rate of charge.

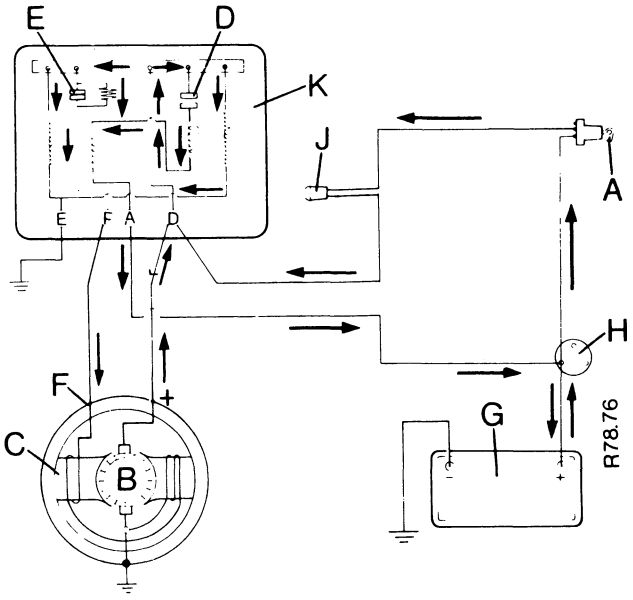

Figure H41
DYNAMO CIRCUIT

A. Starter key.
B. Commutator.
C. Field magnets.
D. Cut-out contacts.
E. Regulator contacts.
F. Field connection.
G. Battery.
H. Starter solenoid.
J. Warning lamp.
K. RB108 type regulator.

FAULT FINDING

Equipment Needed

Voltmeter
Jumper wires

TEST 1: Output

1. Check that the drive belt is adjusted correctly. Check for wear and damage.
2. Disconnect both the wires from the dynamo terminals and connect a jumper wire from one terminal to the other as shown Figure H42.
3. Connect a voltmeter from the jumper lead to ground. Start the engine and let it run at idle speed. The voltmeter must show between 10 and 13 volts and increase with engine speed at a rapid rate. Do not let the voltage increase more than 20 volts or damage can occur to the dynamo.
   If the voltage is less than 10 volts or does not increase at a rapid rate remove the dynamo.
4. Disassemble the dynamo and check all parts. See MAINTENANCE AND REPAIR section for procedures.
5. If the voltage is correct reconnect the dynamo wires.

TEST 2: Wiring

1. Disconnect the wires from the D and F terminals of the voltage regulator and connect the wires together. Make sure the wires do not make contact to ground.
2. Connect a voltmeter between the ends of the wires and earth.
3. Start the engine and let it run at idle speed. The voltmeter must show a voltage of 10 to 13 volts. If the voltmeter does not show any voltage, check for a break in the wires. Check for loose or dirty connections.

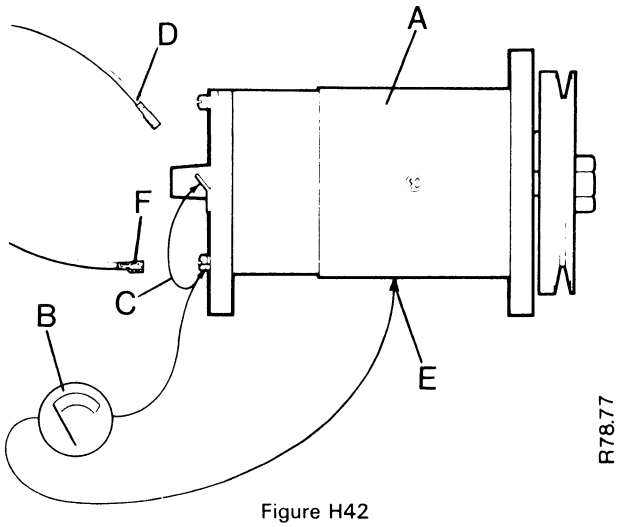

Figure H42
CHECKING DYNAMO OUTPUT

A. Dynamo
B. Voltmeter.
C. Jumper wire.
D. Positive wire.
E. Ground connection.
F. Field wire.

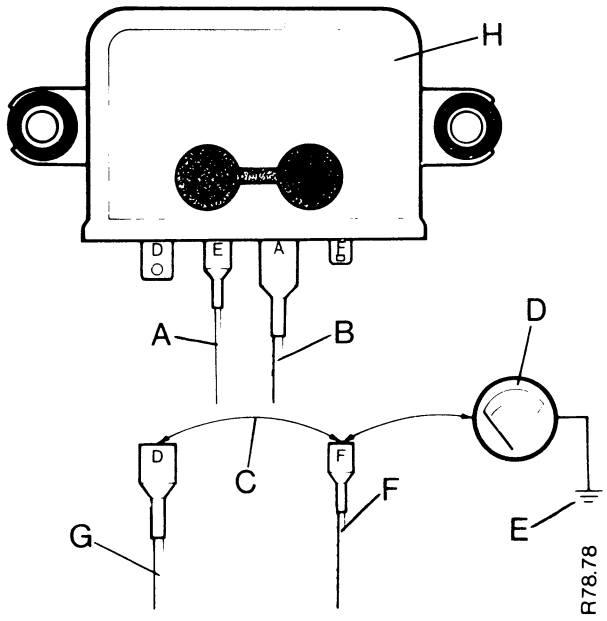

Figure H43
CHECKING DYNAMO WIRING

A. Black wire.
B. Brown wire.
C. Jumper wire.
D. Voltmeter.
E. Ground.
F. Brown/Green wire.
G. Brown/Yellow wire.
H. Regulator.

4. Disconnect the D & F wires from the dynamo. Use a jumper wire to connect one end of the D wire to the battery positive terminal. Connect a voltmeter between the other end of the D wire and ground. The voltmeter must show battery voltage or there is a break in the wire. Do the same with the F wire.
5. Connect one end of the D wire to the battery positive terminal. Connect the voltmeter from the F wire to ground. If a voltage is shown on the voltmeter there is a leakage from D to F. Reconnect all wires if correct.

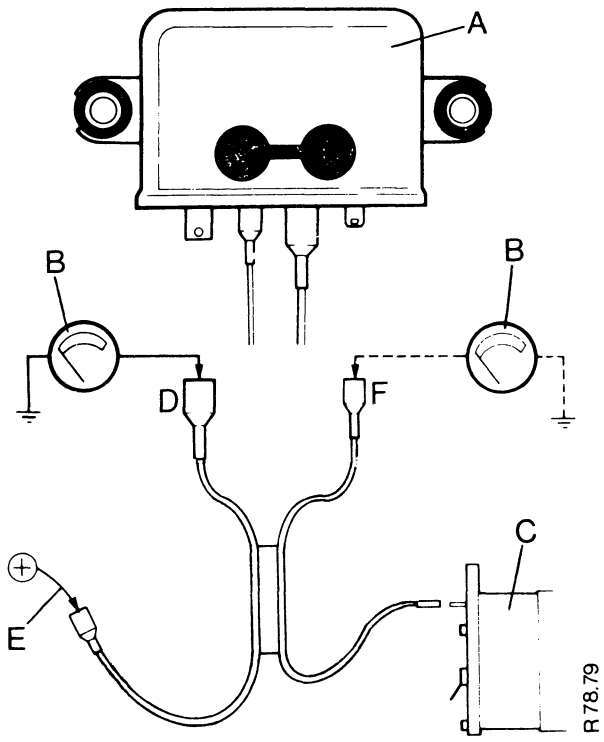

Figure H44
CHECKING DYNAMO WIRING

A. Regulator.
B. Voltmeter.
C. Dynamo.
D. Brown/Yellow wire.
E. Jumper wire to battery positive.
F. Brown/Green wire.

TEST 3: Regulator

1. Make sure the black wire from the E terminal of the regulator is making a good connection to ground.
2. Disconnect the wire from the A terminal of the regulator. Make sure the wire does not make contact to ground.
3. Connect a voltmeter to the D terminal of the regulator and to ground. Do not disconnect the D wire from the regulator.
4. Start the engine and increase the speed to 2000 r/min. The voltmeter must show 16 to 16.6 volts at 20° Celcius (68° Fahrenheit).
5. If the voltage is more, connect a jumper wire from the E terminal to a good ground. Do the check again. If the voltage then decreases, the E wire is not making a good connection to ground.
6. If the voltage is not correct the regulator can be adjusted.

   To increase the voltage turn the screw nearest the F terminal clockwise. See Figure H46.

   To decrease the voltage turn the screw counterclockwise.

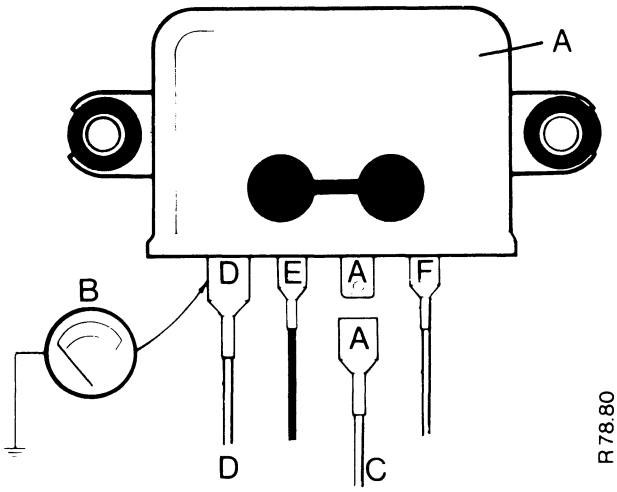

Figure H45
CHECKING DYNAMO OUTPUT

A. Regulator.
B. Voltmeter.
C. Brown wire.
D. Brown/Yellow wire connection.
E. Black wire, to ground.
F. Field wire.

IMPORTANT: Use a screwdriver which has insulation on the blade. Output voltage flows through the adjusting screws and the case is connected to ground.

Make sure the test is done without delay or heat will cause the voltages to change.

7. Reconnect the wire to the A terminal and connect the voltmeter from D to ground.
8. Put the tractor lighting switch to the main beam position and start the engine. The voltage must increase to between 12.7 to 13.3 volts then decrease a small amount.
9. If the voltage is not correct adjust the screw nearest the D terminal. Turn the screw clockwise to increase the voltage or counter-clockwise to decrease the voltage.

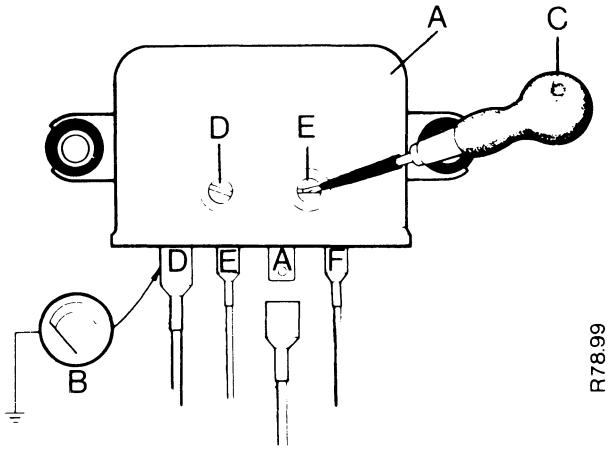

Figure H46
VOLTAGE REGULATOR ADJUSTMENT
A. Regulator. C. Screwdriver.
B. Voltmeter. D. & E. Adjusting screws.

MAINTENANCE AND REPAIR

Two models of dynamo are installed on David Brown tractors. These are the Lucas C40A and C40T models.

MAINTENANCE

1. Every 125 hours check the tension of the drive belt. Adjust if necessary.
2. Every 500 hours apply a small amount of engine oil to the felt pad in the commutator end plate. Remove the rubber plug, apply oil through the hole and install plug again.
3. Check the tightness of the bolts A which fasten the dynamo to the engine.
4. Make sure the electrical connections are clean, tight and correctly connected.
5. Clean the dynamo, especially around the electrical connections.

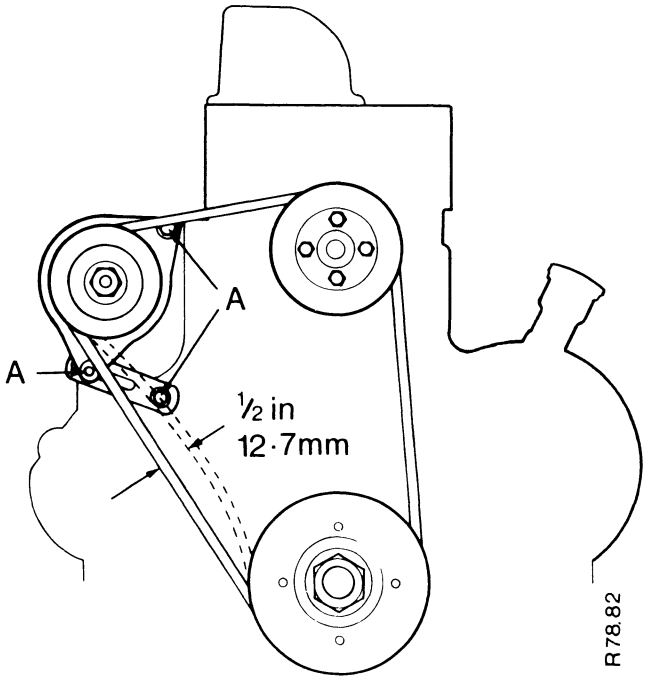

Figure H47
FAN BELT ADJUSTMENT
A. Dynamo fastening bolts

DISASSEMBLY

After the dynamo has been removed from the tractor use the following procedure to disassemble.

1. Remove the two bolts A which hold the assembly together.
2. If an early type dynamo, remove the nut and washers from the field connection B.
3. Remove the end bracket C at the commutator end of the dynamo.
4. Remove the drive end bracket D complete with pulley and armature E from the yoke F.

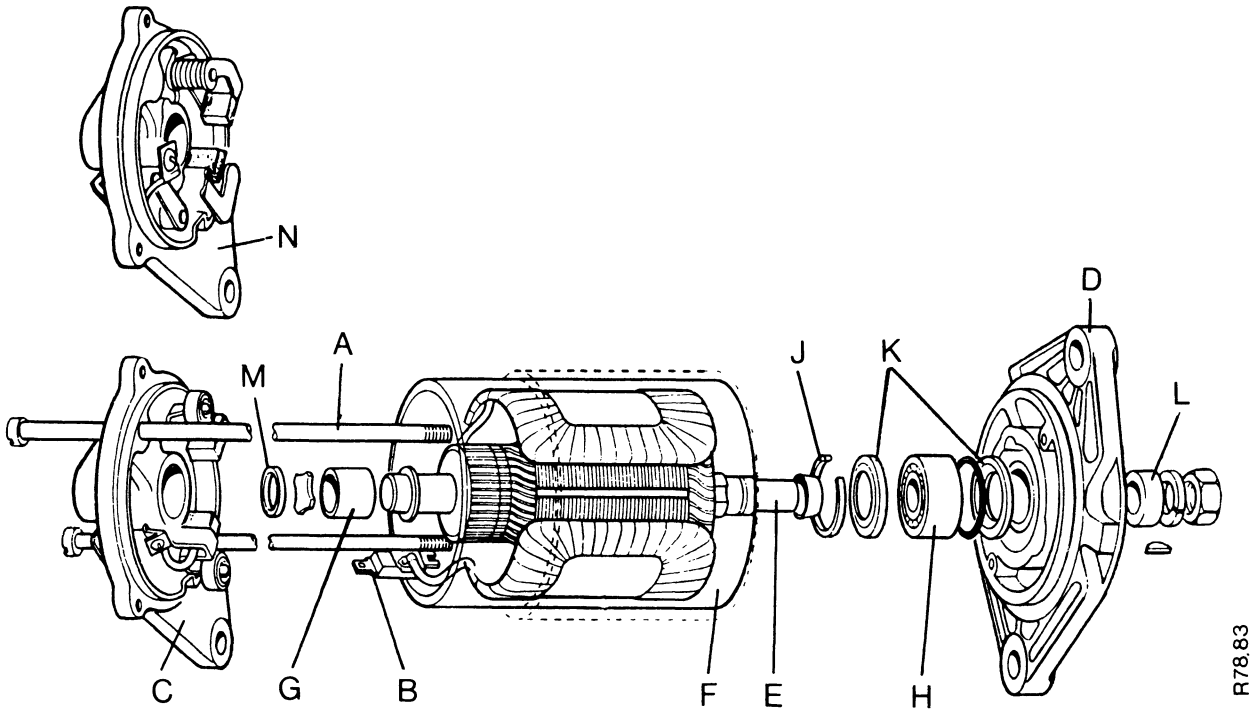

Figure H48
DYNAMO ASSEMBLY

A. Through bolt.
B. Field terminal.
C. Commutator end bracket.
D. Drive end bracket.
E. Armature.
F. Yoke.
G. Bush.
H. Ball bearing.
J. Circlip.
K. Seals.
L. Pulley spacer.
M. Felt oil pad.
N. C40T end bracket.

TEST AND REPAIR

Brushes

1. Remove the brushes from the holders and measure the length. If less than 8mm ($\frac{5}{16}$in), install new brushes.
   On the C40T model, measure to the shoulder of the brush.
2. Clean the brushes with a small amount of petrol on a cloth. Make sure the brushes can move easily in the holders after installing.
3. Apply a small amount of engine oil to the brush pivot arms of the C40T model.
4. Install the end plate complete with brushes on to the commutator.
5. Use a spring-balance to check the brush spring tension with the brushes in the working position.
6. Install new springs if the tensions are not inside the following limits:
   C40A model: 368–850g (13–30oz)
   C40T model: 567–680g (20–24oz)

NOTE: When installing new springs in the C40A model, make sure the spring is as shown in Figure H49.

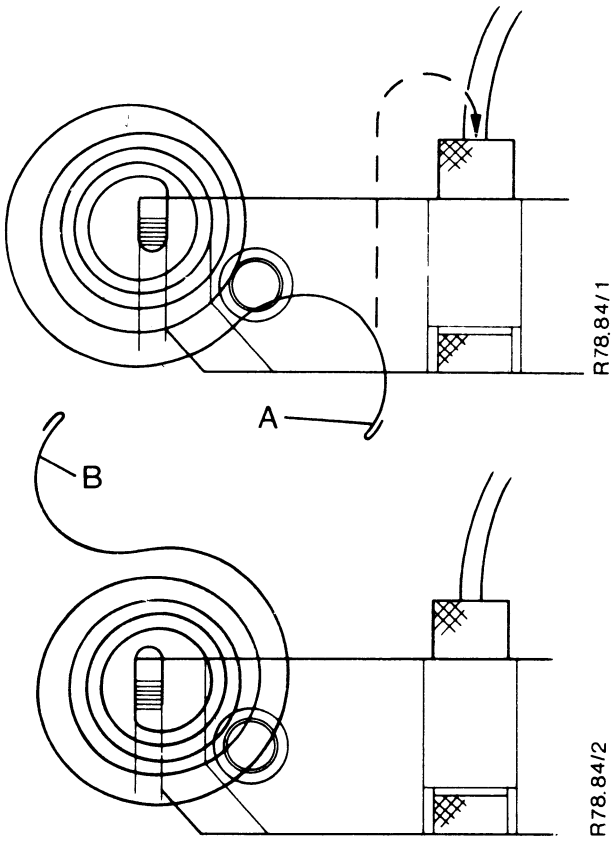

Figure H49
INSTALLING BRUSH SPRINGS
A. Correct.
B. Wrong.

Armature

1. Check for damage or movement of solder connections, caused by heat.
2. Check for movement of commutator segments.
3. Install a new armature if any of the above damage is found. Look for possible cause before running the dynamo again.
4. Check for any indication of armature to field winding contact. If any is found, check bearings for wear. Check the tightness of the screws which fasten the pole shoes to the yoke.
5. Clean the commutator with a small amount of petrol on a cloth. Remove small surface damage with smooth glass paper. Do NOT use emery or similar abrasive.
6. If the damage is deep, a lathe can be used to remove the damage. First check what type of commutator is used, fabricated or moulded, see Figure H50.

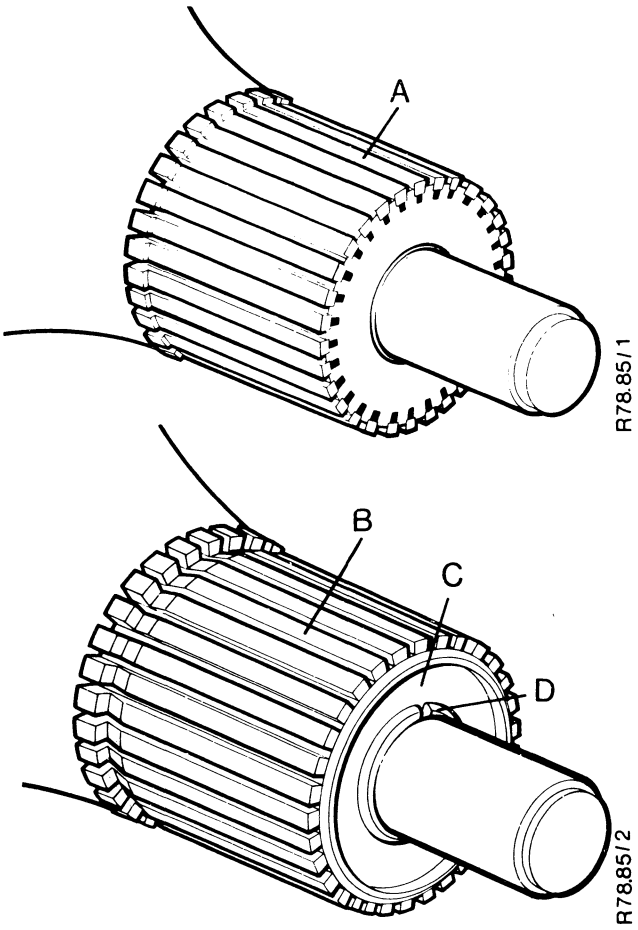

Figure H50
IDENTIFICATION OF COMMUTATORS
A. Moulded commutator.
B. Fabricated commutator.
C. Insulation cone.
D. Metal roll over.

Before doing any repair make sure the armature windings are in good condition.

1. Use a 110 volt AC supply and a 15 watt test lamp to check the insulation as follows:
   Connect the supply to the armature shaft and the test lamp to one of the segments. Repeat the test on all segments. If the lamp illuminates, install a new armature.
2. Connect an ohmmeter between two segments next to each other. Continue this check all round the commutator until all segments have been checked. The reading must be the same for all segments. If a zero or low reading is shown, install a new armature.

If the armature is in good condition the following procedures must be followed for a repair.

1. For fabricated commutators the segments must not be decreased to less than a thickness of 1.5mm ($\frac{1}{16}$in). Cut the insulation to 0.8mm ($\frac{1}{32}$in) below the segments.
2. For moulded commutators the diameter of the commutator must not be decreased to less than 37mm (1.45in). DO NOT cut the insulation away between the segments. It is made to a set depth by the manufacturer.
3. Use a very fine glass paper to get a smooth finish. Clean away particles with an air jet.

NOTE: Make sure all particles of copper are removed from between the segments after a repair.

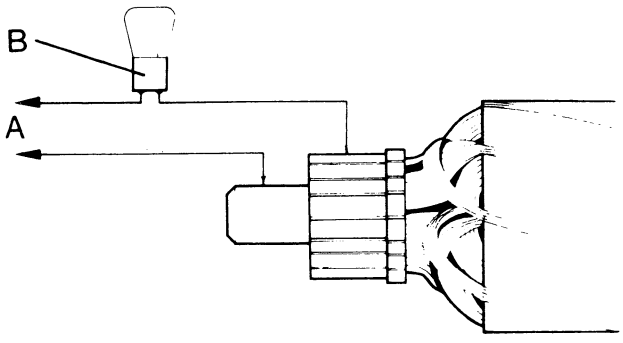

R78.86

Figure H51
CHECKING INSULATION OF ARMATURE WINDINGS
A. 110 volt AC supply.
B. 15 watt test lamp.

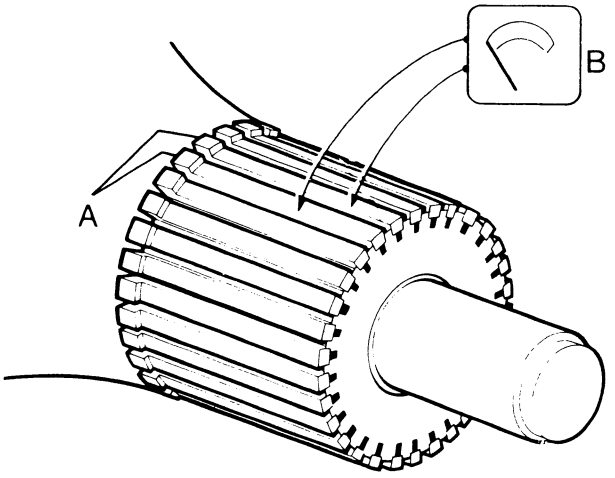

R 78 87

Figure H52
CHECKING CONTINUITY OF ARMATURE WINDINGS
A. Commutator segments.
B. Ohmmeter.

Field Windings

1. Check the tightness of the pole shoe screws.
2. Make an inspection of the windings for any indication of contact with the armature.
3. Check for damage to insulation material.
4. Check for damage to the wire which connects the two windings together.
5. Check the windings for damage caused by heat. Install new windings if damage is found. Look for the possible cause before running the dynamo after assembly.
6. Connect an ohmmeter between the field winding connection and a good ground connection on the yoke. The resistance shown must be 6 ohms, if less look for a short circuit. If the reading is more, check for bad ground connection between the windings and the yoke.
   NOTE: This test can also be done by using an ammeter as shown in Figure H53. The reading will be 2 amperes if the windings are in good condition.
7. To remove the windings, use a drill to remove the rivet which connects the windings to the yoke. Then remove the screws which fasten the pole shoes to the yoke. Remove the windings and shoes.
8. When new windings are to be installed, clean and install old pole shoes to new windings. If a threaded terminal is used, this must be fastened to the new windings. Make a note of the arrangement and colour of the wires before disconnecting.
9. Use a shoe expander to install the shoes to the yoke as shown in Figure H54.
10. Install and tighten the screws which fasten the shoes to the yoke to 41Nm (4kgm) (30lbft).
11. Fasten the windings to the yoke with a new rivet.
12. The wire which connects the windings together must be set in the following positions. See Figure H55.

(a) If the wire has an insulation sleeve, put it in the position shown in Figure H55C.

(b) If the wire is without an insulation sleeve and is connected in the middle, set as in Figure H55C.

(c) If the wire is without an insulation sleeve and connected next to a winding, set as in Figure H55B.

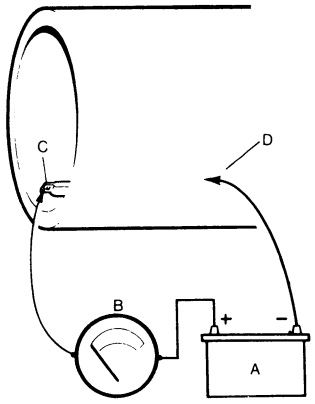

R 78 88

Figure H53
CHECKING RESISTANCE OF FIELD WINDING
A. 12 volt battery.
B. Ammeter.
C. Field terminal.
D. Yoke.

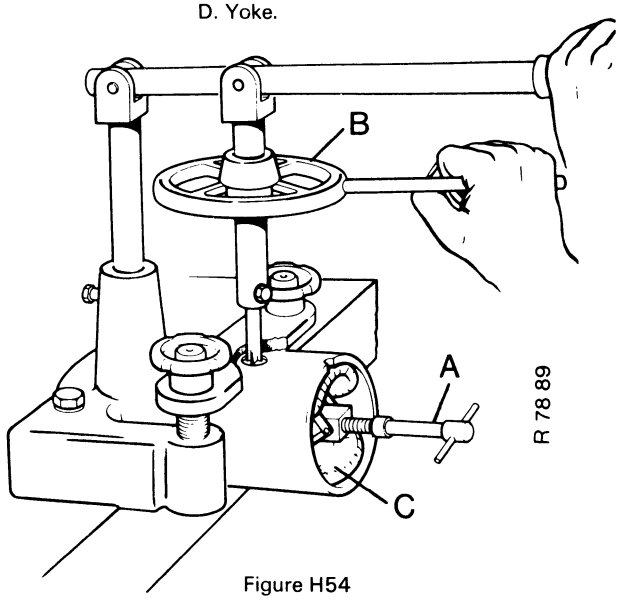

R 78 89

Figure H54
INSTALLING FIELD WINDINGS
A. Field shoe expander.
B. Wheel type screwdriver.
C. Field windings.

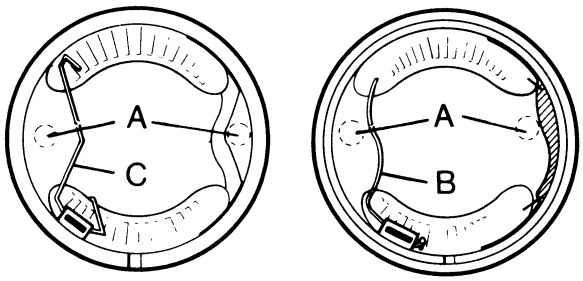

R 78 90

Figure H55
FIELD LINK POSITIONS
A. Through bolts.
B. Link wire early type.
C. Link wire later type.

BEARING REPLACEMENT

Drive End

1. To check the condition of the drive end bearing do the following: Hold the drive end bracket complete with armature vertical and turn the armature by hand. Repeat this with the armature held horizontal.
2. To remove the bearing from the end bracket first remove the pulley nut. Remove the pulley and key from the shaft.
3. Press the shaft out of the end bracket.
4. Use a drill to remove the rivets which fasten the bearing retainer plate to the end bracket.
5. Use a hammer and punch to remove the rivets from the end plate.
6. Press the bearing out of the end plate.
7. Clean around the area and press the new bearing into the end bracket.
8. Use new rivets to install the bearing retainer plate.
9. Press the armature through the bearing of the end bracket as far as it can go.
10. Install the key, pulley, washer and nut to the shaft. Tighten the nut to a torque of 34Nm (3.5 kgm) (25 lbft).

Commutator End

1. Put the new bush in engine oil for 24 hours.
2. Turn a $\frac{5}{8}$in thread tap into the old bush and pull the bush out of the end bracket.
3. Remove the disc and felt oil pad from the bush hole; clean the hole.
4. Apply engine oil to the felt pad and install with the disc into the end bracket.
5. Use a mandrel with a shoulder to press the new bush into the end bracket. The mandrel must be 0.002in larger than the armature shaft.

   DO NOT put a reamer through the bush after it has been installed. This will decrease the lubrication quality of the bush.

ASSEMBLY

1. Install the armature complete with drive end bracket and pulley into the yoke.
2. Install the end bracket to the commutator end.

   On the C40A type, hold the brushes up in the holders with the springs as shown at A, Figure H56. Push the bracket on to the armature, pull the springs up on to the top of the brushes.

   Use the special tool shown in Figure H57 for this purpose.

   On the C40T type, hold the brush pivot arms outwards with your fingers, while you push the bracket on. Release the arms slowly when the brushes are over the commutator.
3. Make sure both end brackets are correctly installed. Install the two through bolts and tighten to 8Nm (0.8kgm) (6lbft).
4. Check the output, see FAULT FINDING, page H30.
5. If test equipment is not available check the dynamo as follows:

   Make a connection between the field and output terminals. Then connect these to the positive terminal of a 12 volt battery. Connect the negative of the battery to a good ground connection on the yoke.

   If assembled correctly the dynamo will run as a motor.

   IMPORTANT: Make sure the polarity is correct before making the connections.
6. To correct the polarity of a dynamo fitted to a tractor use the following procedure:

   Connect a jumper wire to the battery positive terminal. Put the other end of the wire against the field terminal several times. Hold it in contact with the terminal for part of a second only, each time.

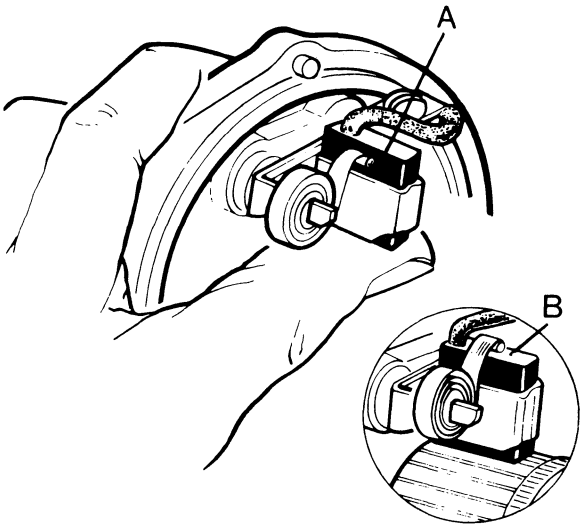

Figure H56
INSTALLING BRUSHES BEFORE FITTING END PLATE
C40A DYNAMO
A. Brush held with spring.
B. Brush in working position.

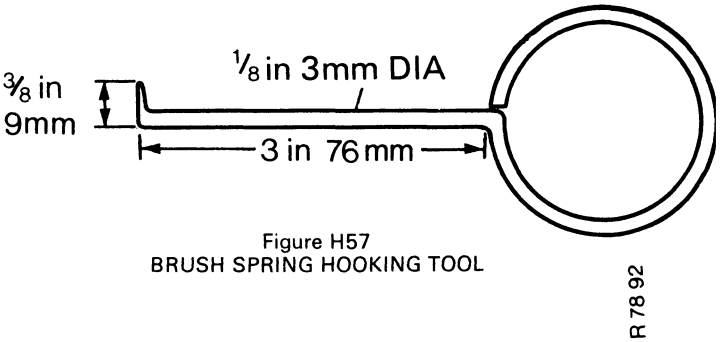

Figure H57
BRUSH SPRING HOOKING TOOL

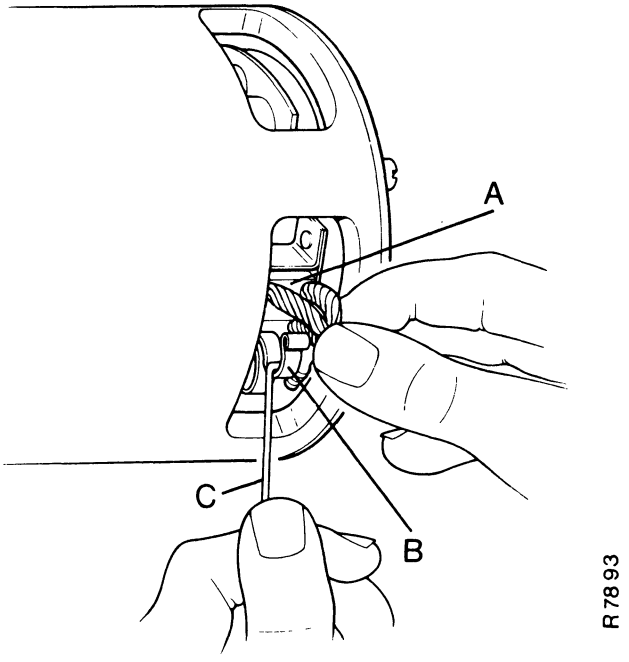

Figure H58
USING BRUSH SPRING TOOL
A. Brush. B. Spring. C. Tool.

VOLTAGE REGULATOR

Tractors with the Lucas C40A dynamo installed, use the Lucas RB108, Despatch number 37394A or 37398A. David Brown Part number K90890. Tractors with the Lucas C40T dynamo installed use the Lucas RB108, Despatch number 37467. David Brown Part number K928729.

MAINTENANCE

The only maintenance needed is a regular check of the connections, especially the wire between 'E' and ground.

The regulator will not operate correctly if there is a bad connection to ground. The result of this can be an increase in the operating temperature of the dynamo, causing damage. The charge rate will also increase to more than the battery needs.

TEST AND REPAIR

Before doing the following tests and adjustments do tests in the FAULT FINDING section. If the fault is not corrected, proceed as follows:

1. Remove the four wires and two fastening screws. Remove the regulator from the tractor.
2. Remove the regulator cover by bending the edge of the cover away from the baseplate.
3. Remove any dust with a dry brush. Use methylated spirits to remove dirt which cannot be removed with a dry brush, if necessary.
4. Clean the voltage regulator contacts with a smooth carborundum stone or silicon carbide paper, if necessary.
5. Clean the cut-out contacts with a fine glass paper. DO NOT use emery cloth or a carborundum stone.

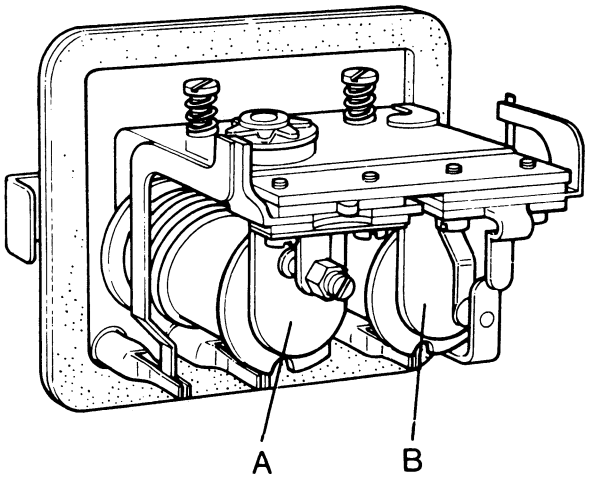

Figure H59
RB108 VOLTAGE REGULATOR
A. Regulator armature.
B. Cut out armature.

Regulator Contacts Gap

This is set by the manufacturer and normally does not need setting. If it is necessary to set the gap, use the following procedure.

1. Loosen the fixed contact locknut F and turn the fixed contact screw B counter-clockwise away from the armature C.
2. Loosen the screws A which fasten the armature.
3. Put a feeler gauge D of 0.50mm (0.020in) thickness between the armature and the coil core face.
4. Press the armature down against the feeler gauge and tighten the screws A which fasten the armature.
5. With the feeler gauge still in position, turn the fixed contact screw B clockwise. Continue turning until the fixed contact is just against the armature. Lock the fixed contact in this position with the locknut.
6. Reset the voltage adjustment screw E.

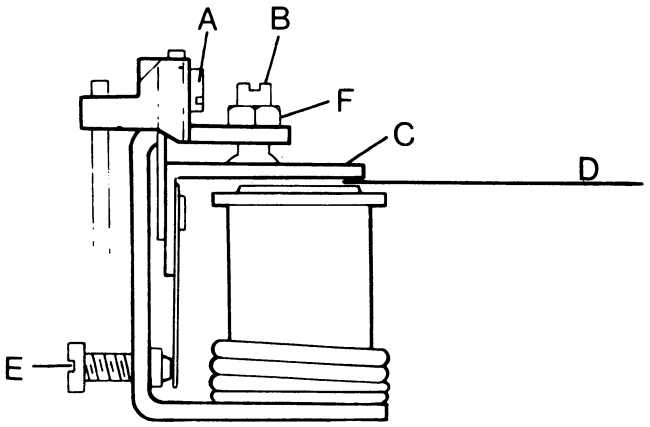

R78.95

Figure H60
REGULATOR GAP SETTING
A. Armature fastening screws.
B. Fixed contact.
C. Armature.
D. Feeler gauge.
E. Voltage adjustment screw.
F. Fixed contact locknut.

Cut-out Contacts Gap

This is also set by the manufacturer but can be set as follows if necessary:

1. Loosen the screws A which fasten the cut-out armature C.
2. Press the armature down against the coil core face and tighten the fastening screws.
3. Hold the armature down in this position and measure the gap F between the armature and the stop arm D. The gap must be 0.60–1.01mm (0.025–0.040in) and can be adjusted by bending the stop arm.
4. Release the armature and measure the gap F between the cut-out contacts. This must be 0.25–0.51mm (0.010–0.020in) and can be adjusted by bending the fixed contact blade B.
5. Reset the voltage adjustment screw E.

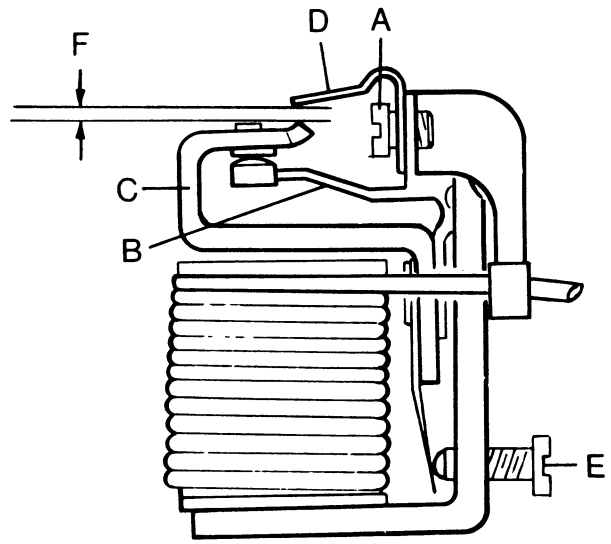

R78.96

Figure H61
CUT-OUT GAP SETTING
A. Armature fastening screws.
B. Fixed contact blade.
C. Armature.
D. Stop arm.
E. Voltage adjustment screw.
F. Gap.

Cut-out Adjustment

1. Connect a voltmeter A between the voltage adjustment screw B on the cut-out and a good ground connection.
2. Start the engine and gradually increase speed. The voltage must increase to 12.7 to 13.3 volts and then decrease a small amount.
3. Make a note of the voltage at which the voltage decreases. If this is not between 12.7 and 13.3 volts adjust by turning the adjustment screw B.
4. Check the cut-in voltage again after the adjustment has been made. Let the engine run at idle speed and then increase the speed gradually until the voltage decreases.
5. Disconnect the wire from the 'A' terminal and make sure it does not connect with ground.
6. Connect a voltmeter A between the 'A' terminal and a good ground connection.
7. Start the engine and increase the speed to 1500 r/min, then decrease speed slowly and read the voltmeter.
8. Make a note of the voltage at which the needle returns to zero. This is an indication of the cut-out contacts opening and must occur at 8.5 to 10 volts.
9. If the contacts open outside these limits, remove the cover. Bend the fixed contact blade B, Figure H61, page H41. Bend the blade towards the armature to decrease the voltage at which the contacts open. Bend the blade away from the armature to increase the voltage at which the contacts open.
10. When all adjustments have been completed and all voltages are correct, reconnect the wire to the 'A' terminal. Put the cover in position and bend the edges over the baseplate.

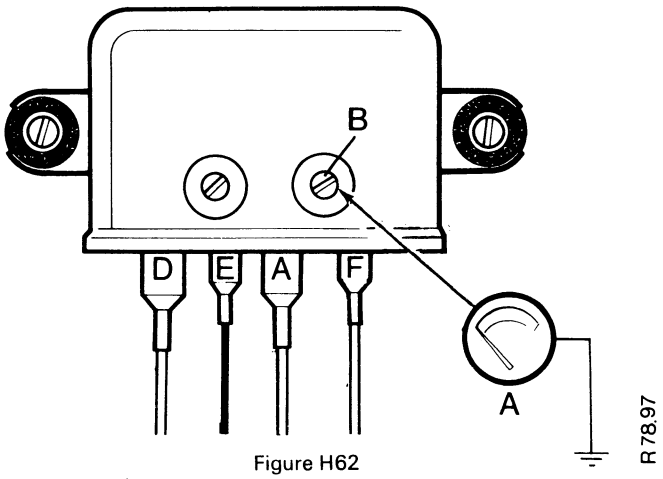

Figure H62
CHECKING CUT-IN SETTING OF CUT-OUT
A. Voltmeter.
B. Cut out adjustment screw.

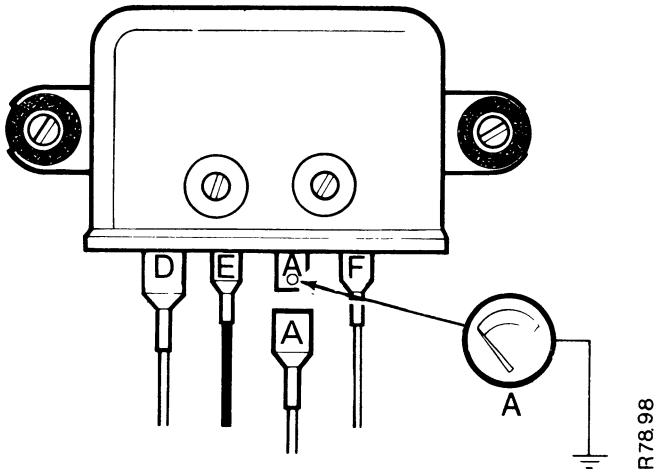

Figure H63
CHECKING CUT-OUT DROP-OFF VOLTAGE
A. Voltmeter.

Regulator Voltage Adjustment.

If a test bench is not available, install the regulator on the tractor and use the following procedure.

1. Make sure all connections are clean and tight, especially the ground wire connections.
2. Remove the wire to the 'A' terminal. Make sure it is prevented from making contact with ground.
3. Start the engine and run it at 1500 r/min.
4. Connect a voltmeter B between the regulator adjustment screw D and a good ground connection.
5. Turn the adjustment screw E clockwise to increase the voltage and counter-clockwise to decrease it.
6. The voltage must be set to the following values shown:

Air Temperature	Voltage: Open Circuit
10° Celcius (50° Fahrenheit)	16.1 to 16.7
20° Celcius (68° Fahrenheit)	16.0 to 16.6
30° Celcius (86° Fahrenheit)	15.9 to 16.5
40° Celcius (104° Fahrenheit)	15.8 to 16.4

   NOTE: Do the adjustment as fast as possible or the coils will generate heat and change the readings.
7. When the voltage is correct, stop the engine. Start the engine again after a short period and check the voltage. If it is still correct reconnect the 'A' terminal wire.

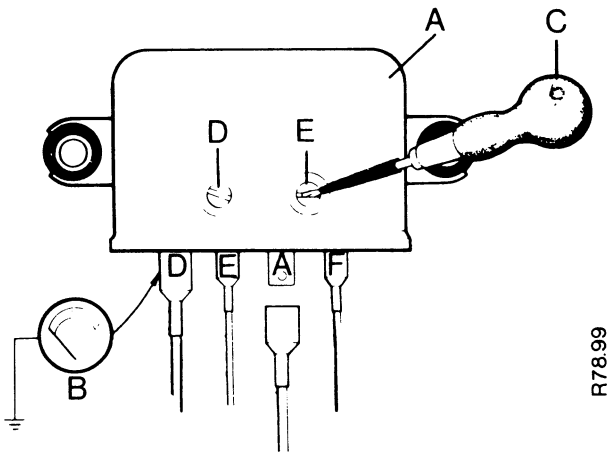

Figure H64
CHECKING DYNAMO OPEN-CIRCUIT VOLTAGE
A. Voltage regulator.
B. Voltmeter.
C. Screwdriver with insulation on the blade.
D. Regulator adjustment screw.
E. Cut-out adjustment screw.

STARTER

HOW IT WORKS

Lucas M.50 Model

Before the starter can be operated the starter safety switch has to be closed. This is done by putting the range lever (Hydra-Shift) or gear lever (Syncromesh) in the neutral position.

When the starter-key is turned to the START position battery current energises the solenoid coils. The solenoid plunger A is retracted and the pinion B is engaged with the flywheel ring gear C.

The solenoid has two sets of contacts. The first set D to close are connected to only one field-winding E. The second set F is connected to the other three. If the teeth of the pinion and flywheel are not aligned only the first set close. This gives enough power to turn the armature to align the teeth. The engagement spring G then engages the pinion with the flywheel and closes the second contacts. With both contacts closed full power is available to turn the engine.

When the starter key is released the current to the solenoid is interrupted and the plunger is released. The return spring H disengages the pinion from the flywheel and opens both sets of contacts.

To prevent the engine turning the starter when the key is released a one-way clutch is installed. This is part of the pinion assembly and has rollers which lock in one direction only, Figure H69.

To stop the starter as soon as the key is released a centrifugal brake is installed. Two shoes are fastened to the commutator end of the armature with springs. The shoes move outwards and make contact with end plate as the armature speed increases. The brake also prevents the starter speed increasing above a set rate if the load is low.

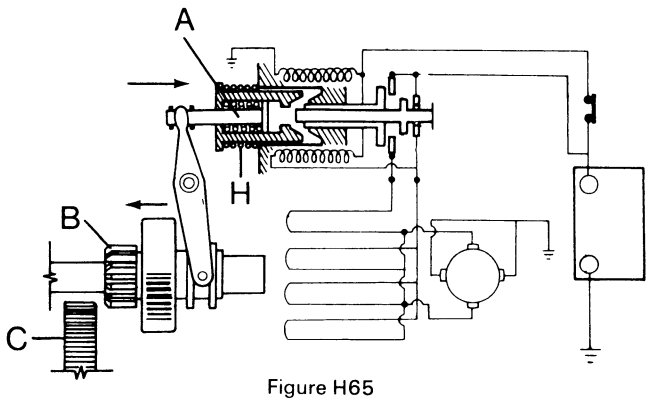

R78.100

Figure H65
PINION DISENGAGED

A. Plunger.
B. Drive pinion.
C. Flywheel gear.

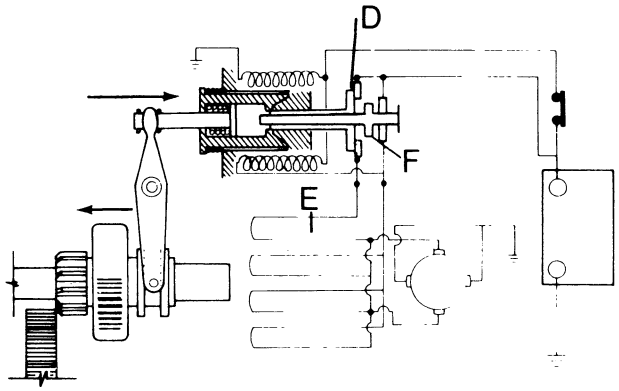

R78101

Figure H66
TOOTH TO TOOTH CONTACT

D. First contacts.
E. Field winding.
F. Second contacts.

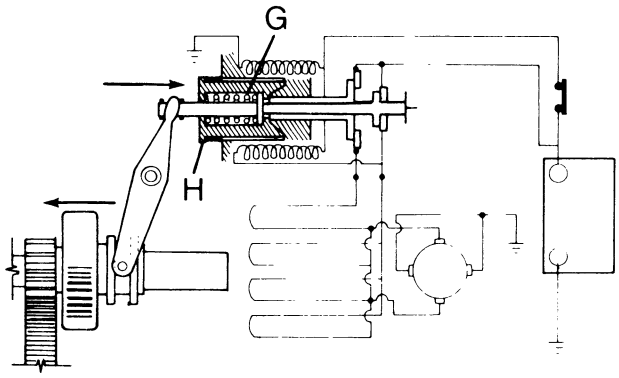

R78102

Figure H67
PINION ENGAGED

G. Engagement spring.
H. Return spring.

Lucas M45 Model

Before the starter will operate the safety switch must be closed. This is done by putting the range lever (Hydra-Shift) or gear lever (Synchromesh) in the neutral position.

After the safety switch A has been closed the starter key B is turned to the START position. Battery current then energises the solenoid coil C which retracts the plunger D.

As the plunger is retracted it engages the pinion with the flywheel ring gear. When the plunger is fully retracted it closes a set of contacts E. Battery current now goes to the armature and field windings F. Full power is available to turn the engine.

If the teeth of the pinion and flywheel are not aligned the engagement spring coils close. The plunger can then complete the movement to close the contacts to give current to turn the armature. The engagement spring engages the pinion when the teeth are aligned. A one-way clutch prevents the engine turning the starter when the engine starts, see Figure H69.

Early starters had multi-plate clutches but later models have a roller type, as installed on the M50 model.

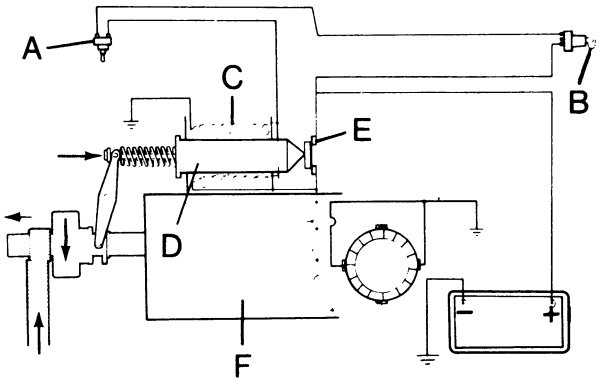

Figure H68
LUCAS M45G STARTER

A. Safety switch.
B. Starter switch.
C. Solenoid winding.
D. Plunger.
E. Contacts.
F. Field windings.

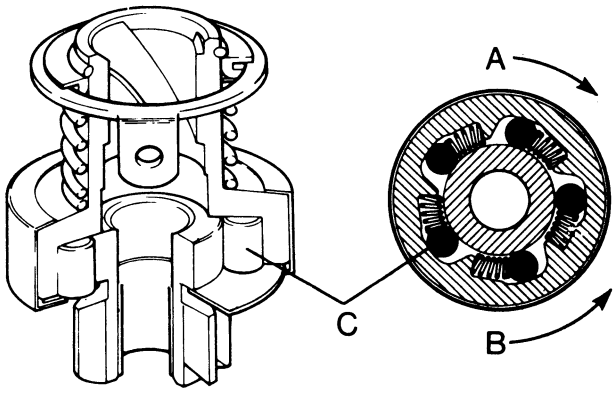

Figure H69
ROLLER CLUTCH ASSEMBLY

A. Lock direction.
B. Free direction.
C. Rollers.

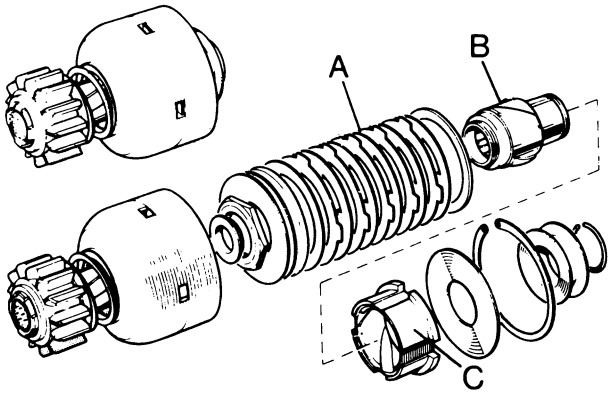

Figure H70
PLATE CLUTCH ASSEMBLY

A. Clutch plates
B. Driving sleeve
C. Moving member

Starter for Gasoline Engine

The safety switch A is closed with the gear lever in neutral. When the ignition key B is turned to START battery current energises the solenoid C and closes a set of contacts D. Current then goes through the contacts to the armature E and field windings F to give full power.

The pinion is not directly connected to the armature but moves along a spiral sleeve on the armature. The sleeve has a large external spiral which fits an internal spiral of the pinion. When the armature turns, the sleeve turns and the pinion moves along the sleeve towards the flywheel. The sleeve is prevented from moving along the armature shaft by a strong spring. This spring absorbs any shocks when the pinion first engages the flywheel.

When the starter key is released the armature stops turning. The flywheel moves the pinion along the sleeve in the opposite direction until it disengages.

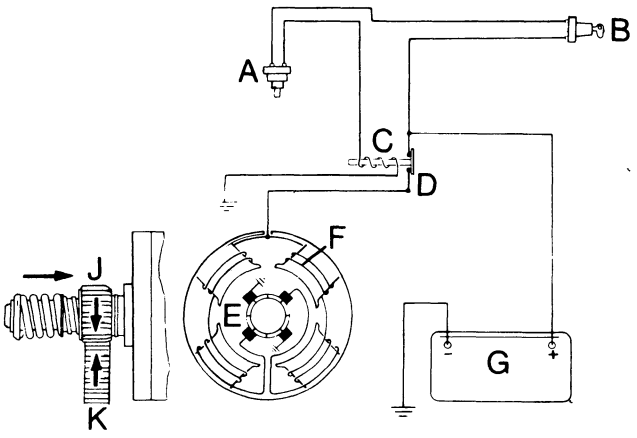

Figure H71
STARTER CIRCUIT GASOLINE ENGINE

A. Safety switch.
B. Starter switch.
C. Solenoid.
D. Contacts.
E. Armature.
F. Field windings.
G. Battery.
J. Pinion assembly.
K. Flywheel gear.

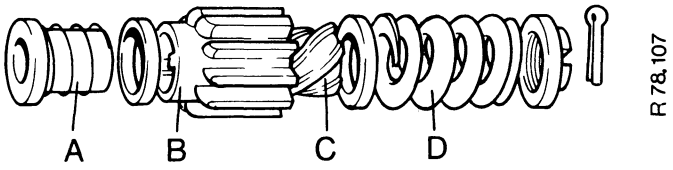

Figure H72
DRIVE PINION ASSEMBLY

A. Anti rattle spring.
B. Drive pinion.
C. Spiral sleeve.
D. Drive spring.

FAULT FINDING

Make sure the battery has a full charge and that all connections are clean and tight before starting the tests.
Before operating the starter:
(a) Put the gear-lever (Syncromesh) or range-lever (Hydra-Shift) in the neutral position.
(b) Put the engine stop control in the stop position.

TEST 1: Switch Circuit

If the starter does not operate when the starter switch is turned to START proceed as follows:
1. Connect a new switch in between the solenoid and the battery positive terminal as shown in Figure H73.
2. Close the switch; if the starter works check for dirty, loose or broken connections in the switch circuit.
3. Check the starter switch and safety switch for correct operation if all wires and connections are correct.
4. Install new switches if necessary and test again.
5. If starter turns slowly do the next test.

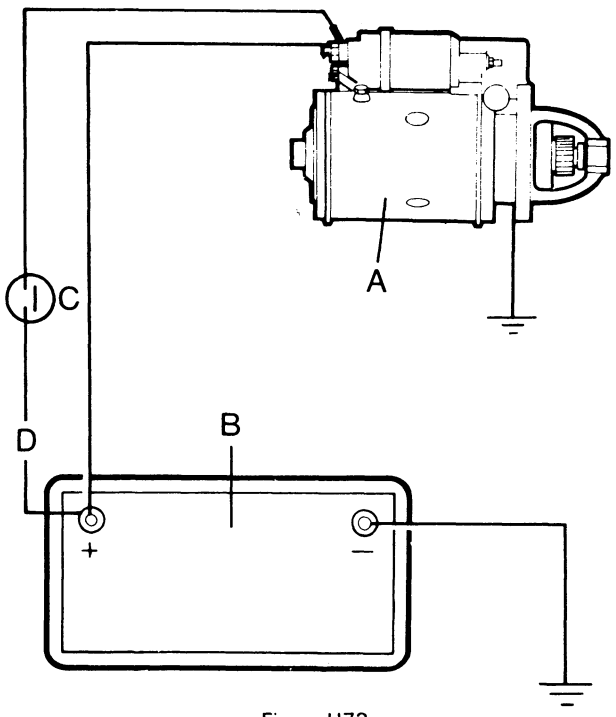

R 78.108

Figure H73
CHECKING STARTER SWITCH CIRCUIT
A. Starter motor.
B. Battery.
C. New switch.
D. Jumper wire.

TEST 2: Battery Voltage

1. Connect a voltmeter between the battery posts, **not** the cable terminals.
2. Operate the starter by turning the starter key. The voltmeter must show 9.5 to 10.5 volts, with the engine warm.
3. If the voltage is less than 9.5 volts or the starter turning speed is still slow do the next test.

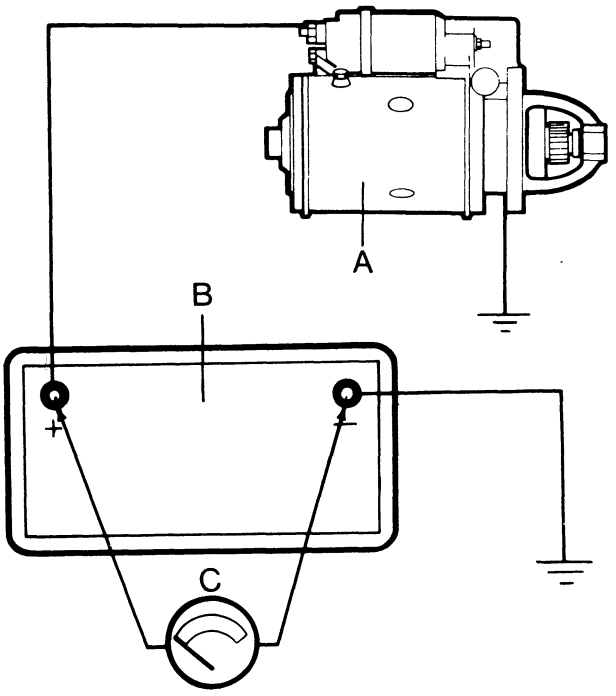

R 78.109

Figure H74
CHECKING BATTERY VOLTAGE WITH LOAD
A. Starter motor.
B. Battery.
C. Voltmeter.

TEST 3: Starter Cable

1. Connect the voltmeter between the insulated terminal on the starter body and the battery positive post as shown.
2. Turn the starter key to the 'ACC' position. The voltmeter must show battery voltage.
3. Operate the starter and read the voltmeter. If the voltmeter now shows more than 0.5 volts check all battery, starter and solenoid connections. Make sure a cable of the correct capacity has been installed.

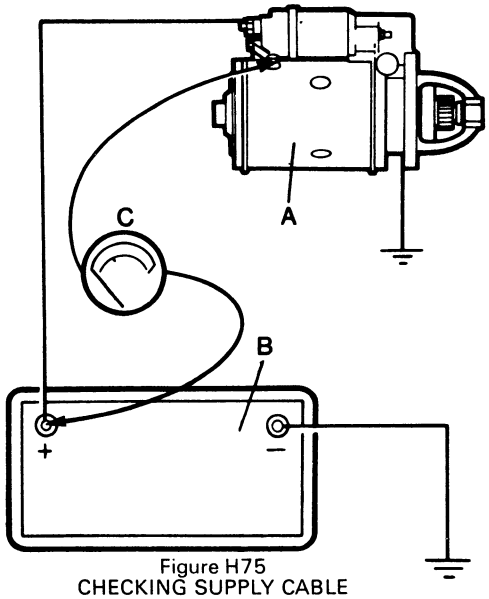

R 78.110

Figure H75
CHECKING SUPPLY CABLE

TEST 4: Solenoid

1. Connect a voltmeter between the solenoid terminals as shown.
2. Operate the starter and read the voltmeter. The voltmeter must show zero when the starter is operating. If the meter shows a voltage, the solenoid contacts must be checked.

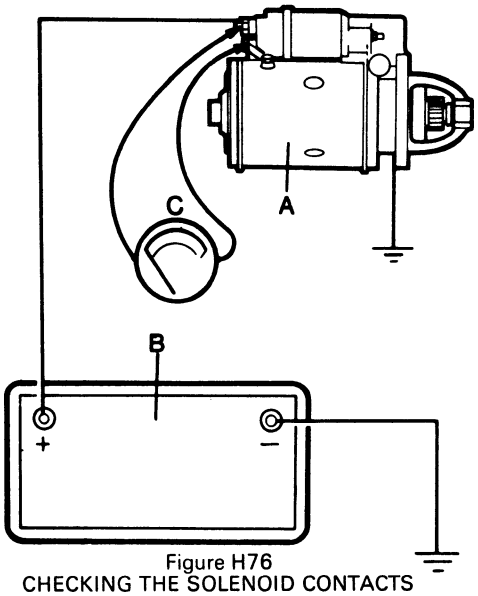

R 78.111

Figure H76
CHECKING THE SOLENOID CONTACTS

TEST 5: Ground Connections

1. Connect a voltmeter between the battery ground post and the commutator end bracket as shown.
2. Operate the starter and read the voltmeter. If more than 0.5 volts are shown, check the connections from the starter and battery to ground.
3. If tests show that the wiring and battery are correct, remove the starter for more checks. See MAINTENANCE AND REPAIR.

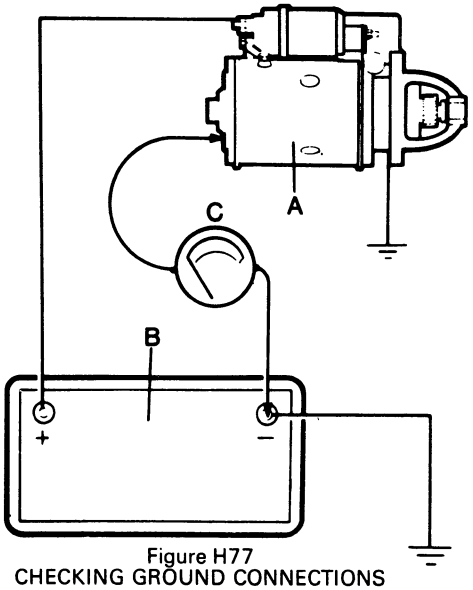

R 78.112

Figure H77
CHECKING GROUND CONNECTIONS
A. Starter motor.
B. Battery.
C. Voltmeter.

MAINTENANCE AND REPAIR

TYPES AND TRACTORS

Lucas M50, 1412 and 1410 tractors. Despatch Number 26379A. David Brown Part Number K919752.
Lucas M45, 1212, 1210, 996, 995, 990 tractors. Despatch Number 26278. David Brown Part Number K89772.
Lucas M45, 880, 780, 885 tractors with diesel engines. Despatch Number 26215. David Brown Part Number K913007.
Lucas 3M100, 885 tractor with gasoline engines – from January 1973. Despatch Number 25679A. David Brown Part Number K944488.
Lucas M45G, 4600, 3800, and 885 tractors to December 1972. Despatch Number 26277. David Brown Part Number K922703.
Bosch 0-001-362-060, all 4cyl models from August 1977, not all tractors. David Brown Part Number K954700.

MAINTENANCE

Check the tightness of the bolts which fasten the starter motor to the engine.

Make sure the connections are clean and tight.

NOTE: Lubrication is not needed while the starter is in use.

DISASSEMBLY

Lucas M50 and M45

1. Disconnect the battery and remove the starter from the tractor.
2. Remove the link A which connects the starter to the solenoid R.
3. Remove the nuts and washers or Bolts B which fasten the solenoid to the starter.
4. Pull the solenoid away from the starter. Disconnect the engagement fork K from the end of the plunger C. Remove the solenoid from the starter.

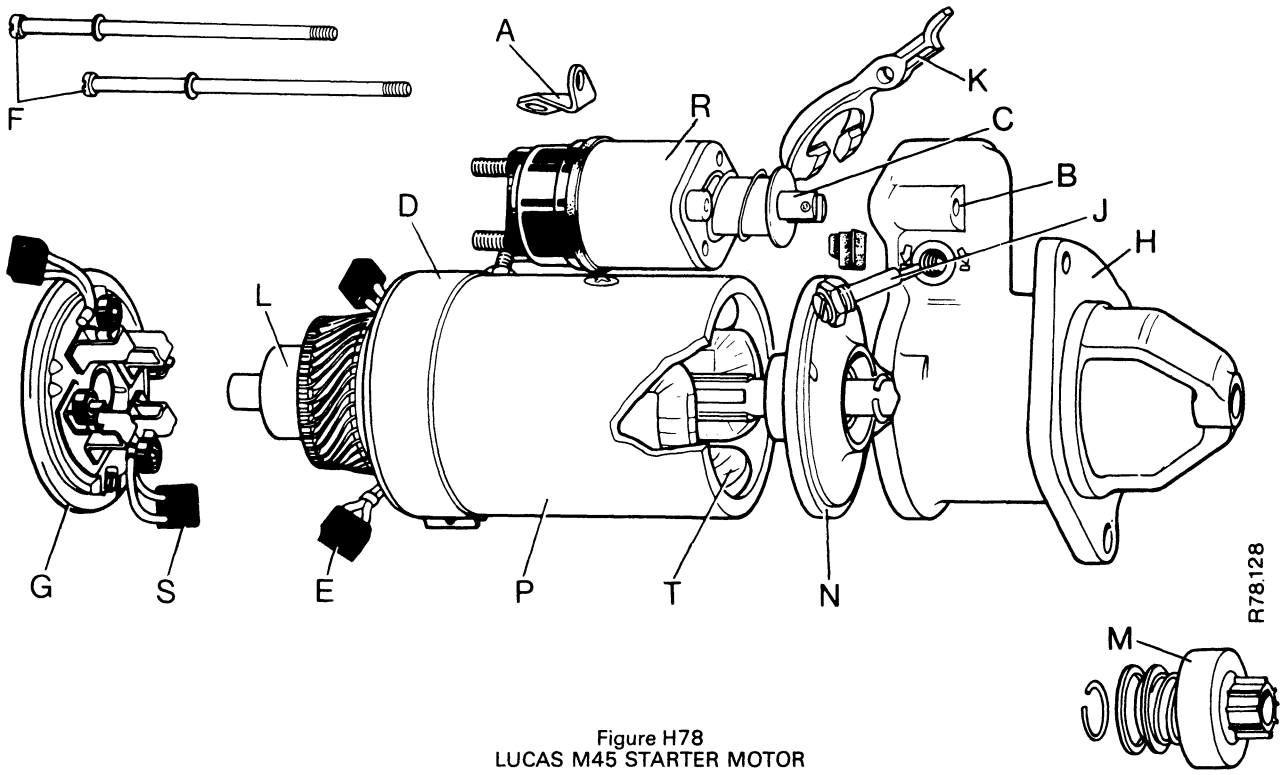

Figure H78
LUCAS M45 STARTER MOTOR

A. Link to solenoid.
B. Bolts to solenoid.
C. Solenoid plunger.
D. Metal band.
E. Field brush.
F. Through bolts.
G. Commutator end bracket.
H. Drive end bracket.
J. Pivot pin.
K. Engagement fork.
L. Armature.
M. Drive assembly.
N. Intermediate bracket.
P. Yoke.
R. Solenoid.
S. Ground brush.
T. Field windings.

5. On the M45 types, remove the metal band D from the yoke. Remove the field brushes E from the holders. Remove the two bolts F which hold the assembly together and remove the end bracket G.

   On the M50 type, first remove the two bolts F which go through the starter to hold the assembly together. Move the end bracket G away from the yoke and pull the field brushes D out of the holders. Remove the end bracket G.
6. Remove the brake shoe assembly and thrust washers from the end bracket. Make a note of the positions of the washers for correct assembly.
7. Remove the rubber seal from the commutator bracket on the M50 type.
8. Loosen the locknut of the pivot pin J for the engagement fork K. Use a screwdriver to remove the pin from the end bracket H.
9. Remove the end bracket H and the engagement fork K.
10. Remove armature L complete with drive assembly M and intermediate bracket N from the yoke P.
11. Hold the armature in a vice with soft jaws. Push the thrust collar away from the circlip at the drive end.

    Remove the circlip and remove the thrust collar and drive assembly from the shaft.
12. Remove the intermediate bracket and any shims from the armature shaft. Keep the shims safe for correct assembly.
13. Clean all parts ready for checking.

Lucas M45G Starter

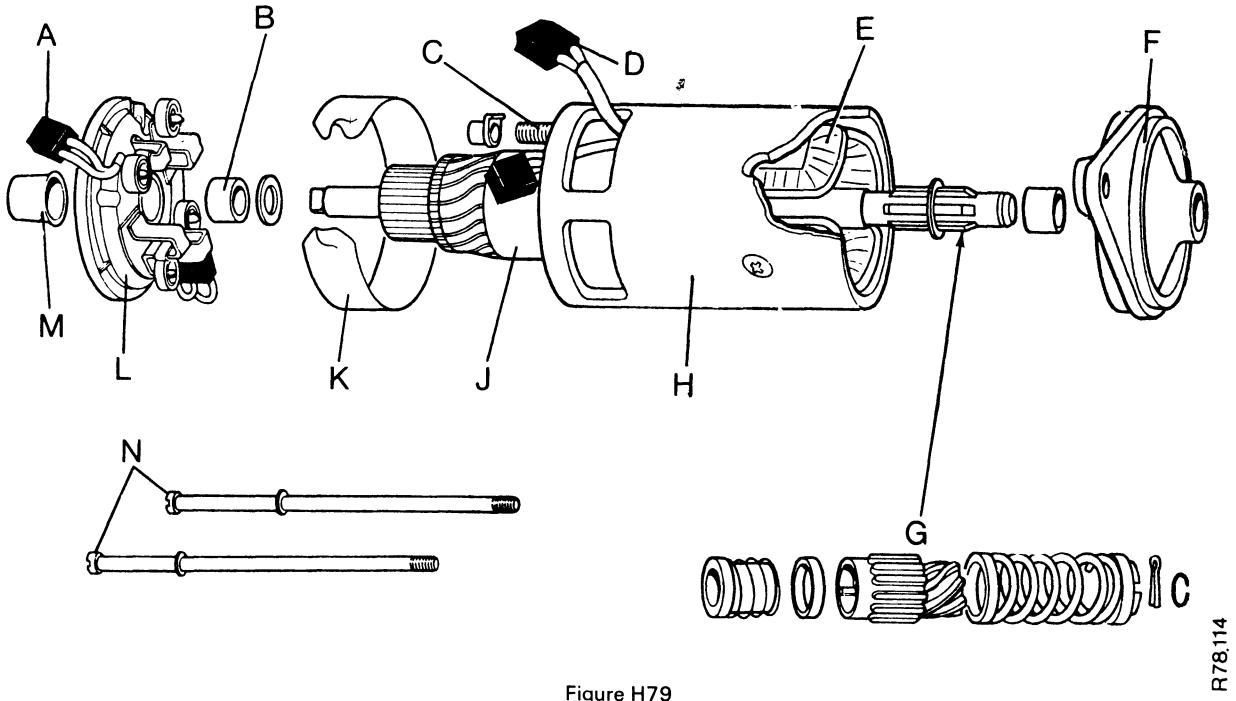

Figure H79
LUCAS M45G TYPE STARTER MOTOR

A. Ground brush.
B. Bush bearing.
C. Field terminal.
D. Field brush.
E. Field winding.
F. Drive end bracket.
G. Drive assembly.
H. Yoke.
J. Armature.
K. Metal band.
L. Commutator end bracket.
M. Cap.
N. Through bolts.

Lucas 3M100 Starter

1. Disconnect the battery and starter. Remove the starter from the tractor.
2. Remove the cap A over the end of the shaft in the commutator end bracket D.
3. Use a small, sharp chisel to remove the claws of the retainer ring B on the end of the shaft. Remove the ring.
4. Remove the terminal nut and washers C.
5. Remove the two bolts which holds the starter assembly together.
6. Separate the end bracket D at the commutator end from the yoke E. Remove the two field brushes F from the holders. Remove the end bracket D completely.
7. Remove the bracket G, drive assembly and armature M complete, from the yoke E.
8. Remove the retainer ring H from the end of the drive shaft. Remove the collar J, spring K and drive assembly L.

NOTE: Some starters have a split pin and nut at the end of the shaft.

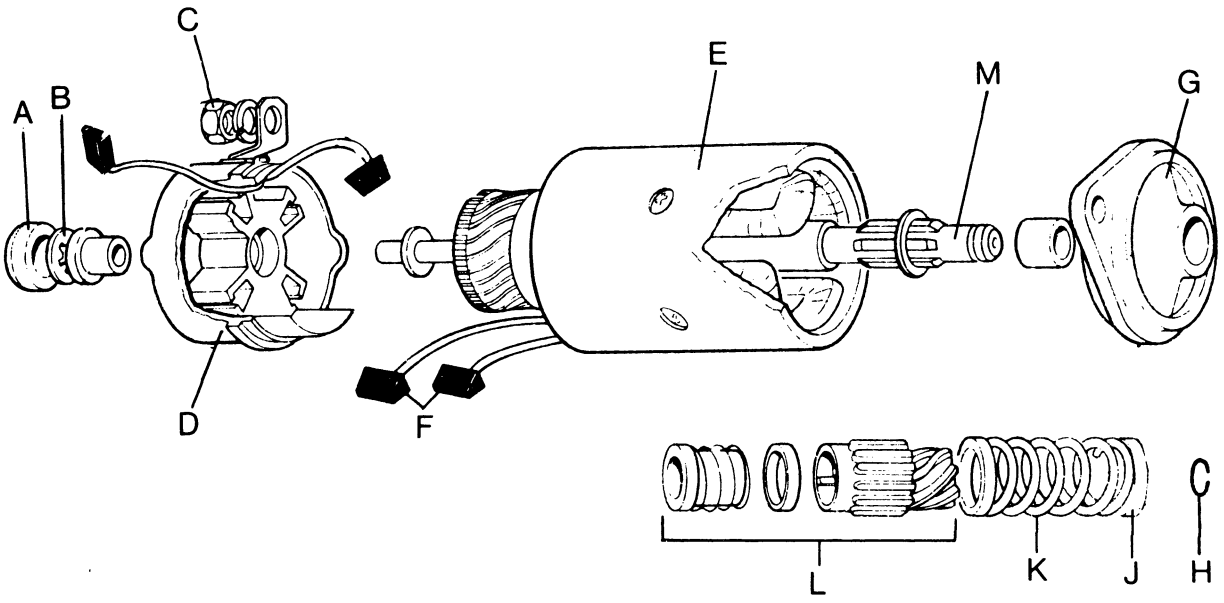

R78115

Figure H80
LUCAS STARTER MOTOR TYPE 3M100

A. Cap.
B. Retainer ring.
C. Terminal nut and washers.
D. Commutator end bracket.
E. Yoke.
F. Field brushes.
G. Drive end bracket.
H. Retaining ring drive assembly.
J. Thrust collar.
K. Drive spring.
L. Drive assembly.
M. Armature.

TEST AND REPAIR

Brushes

1. Measure the length of each brush. If less than 14mm ($\frac{9}{16}$in) on M50 and M45 types or 9.5mm ($\frac{3}{8}$in) on 3M100 type, install new brushes.
2. Use a soldering iron to install new ground brushes on to the end bracket.
3. To install new field brushes, first cut the brush wires 3mm ($\frac{1}{8}$in) from the connection to the field. Open the loop of the new brush and put solder on it. Put solder on the end of the field wire. Put the cut end through the loop of the brush wire and close the loop with pliers. Complete the connection by heating with a soldering iron.
4. Make sure the brushes can move easily in the holders. Clean brushes and holders if necessary.
5. Check the pressures of the brush springs as shown in Figure H81. If the pressure is less than 1.22kg (43oz) M50 and M45 types or 1.02kg (36oz) 3M100 type, install new springs.
6. On 3M100 type starter remove the springs with long nose pliers. To install new springs, close the coils of the spring and put it down into the holder. Move the spring in to the operating position with a small screwdriver.

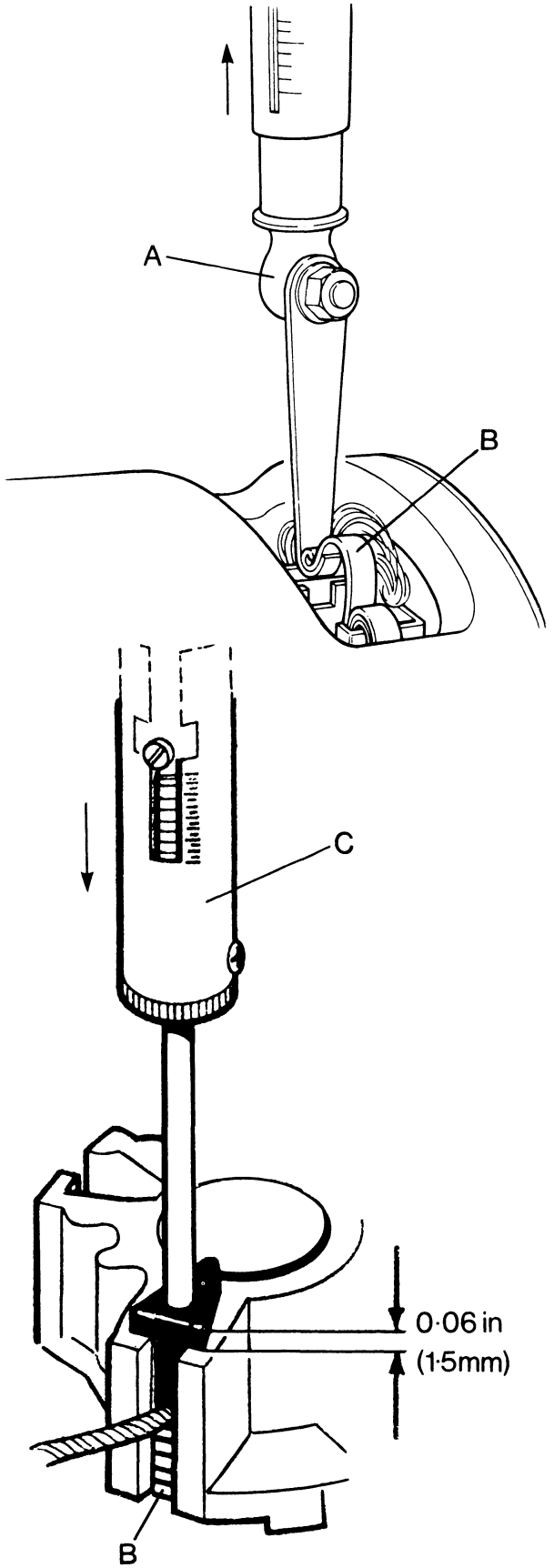

Figure H81
CHECKING BRUSH SPRING PRESSURE
A. Pull type gauge for M50 and M45 starters.
B. Brush springs.
C. Push type gauge for 3M100 starter.

7. To check the field brush holder insulation on the M45G type, use a 110 volt supply. Connect the supply to the end bracket and a 15 watt test lamp to the holder. Repeat on the other holder. The lamp must not illuminate.
8. Check the spring insulation of the 3M100 type as follows. Connect the supply to the end bracket and the test lamp to the spring. Repeat on the other spring. The lamp must not illuminate.

NOTE: Make sure the brush wires do not contact the bracket during the test.

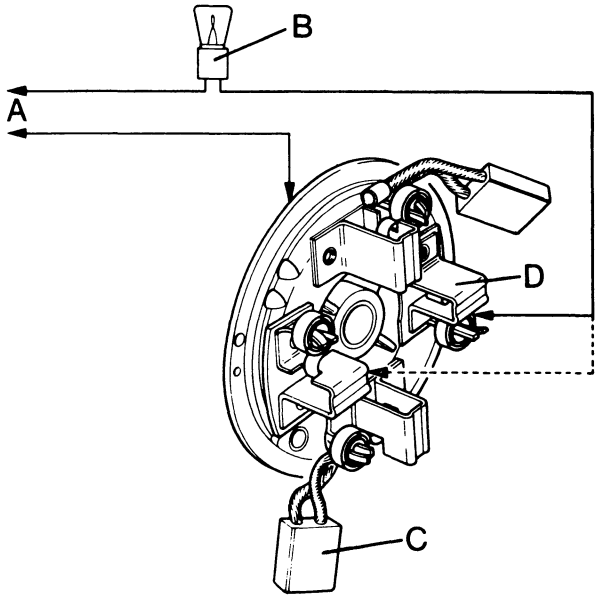

R78.118

Figure H82
TESTING BRUSH HOLDER INSULATION
A. 110 volt AC supply.
B. 15 watt test lamp.
C. Earth brush.
D. Brush holder.

Commutator

1. Clean the surface with a small amount of petrol on a cloth.
2. Use a fine glass paper to remove small amounts of damage.
3. If the damage can not be removed by glass paper, use a lathe. Run the lathe at a fast speed and take the smallest cut possible. Make sure the cutting tool is sharp.

   DO NOT decrease the diameter of the M50 and M45 commutators to less than 38.1mm (1.50in).

   DO NOT decrease the thickness of the segments on the 3M100 type commutator to less than 3.5mm (0.140in).

   Use a fine glass paper to get a smooth finish after cutting.

   DO NOT cut the insulation below the segments.

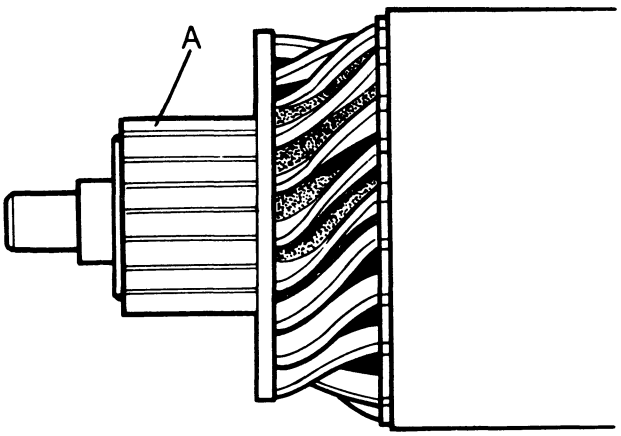

R78.119

Figure H83
COMMUTATOR
A. Type used on M50 and M45 starters.

Field Windings

1. Make an inspection of the inside of the yoke. Look for any indication of the armature making contact with the windings.
2. Look for burn marks on the insulation of the windings. This shows a high operating temperature. Look for cause before you install new windings.
3. Check the insulation on the M50 starter by connecting a 110 volt supply A to the field terminal D. Connect a 15 watt test lamp B to a clean connection on the yoke E. Make sure the brushes C do not contact the yoke during the test. The lamp must not illuminate.

   On the M45G type starter connect the supply to the yoke and the lamp to each brush one at a time. Then connect the lamp to the field terminal. The lamp must not illuminate. Make sure the brush wires do not contact the yoke during the test.

   On the 3M100 type starter the rivet which connects the windings to the yoke must be removed. Make sure the test is necessary before removing this rivet.

   After the rivet has been removed, connect a test lamp to the end which has been disconnected. Connect the supply to a clean part of the yoke. The lamp must not illuminate.
4. To remove the field windings, first remove the rivet from the 3M100 type starter with a drill. Then remove the four screws which fasten the pole shoes to the yoke.
5. Clean the inside of the yoke and put the new windings in position. Install the screws but do not tighten.
6. Install the through bolt insulation pieces and tighten the screws to a torque of 41Nm (4kgm) (30lbft).

   NOTE: Put the insulation pieces at 180 degrees to each other and at 90 degrees to the field brushes.
7. Install a new rivet on the 3M100 type starter.

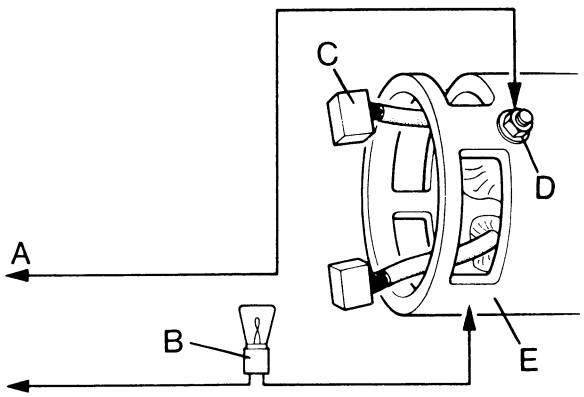

Figure H84
TESTING FIELD WINDING INSULATION
A. 110 volt AC supply.
B. 15 watt test lamp.
C. Field brushes.
D. Field terminal.
E. Yoke.

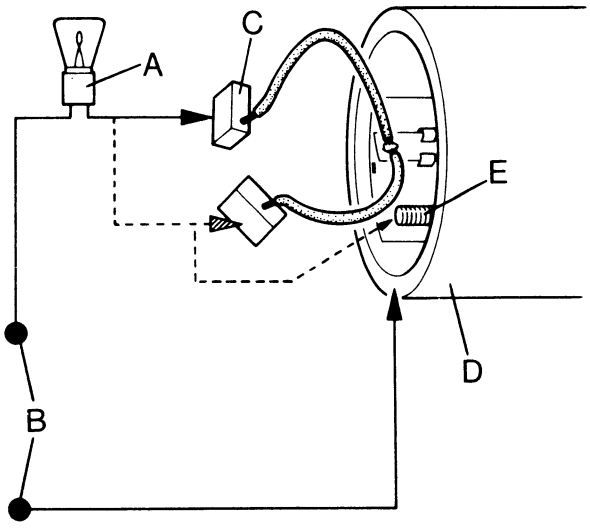

Figure H85
M45 STARTER
A. 15 watt test lamp.
B. 110 volt AC supply.
C. Field brush.
D. Yoke.
E. Field terminal.

Bearings: Bush Type

1. Measure the internal diameter of the bearings. If more than the following, install new bearings.

M50 and M45	Commutator end	12.83mm (0.505in)
	Intermediate	28.63mm (1.127in)
	Drive end	17.14mm (0.675in)
3M100 type	Commutator end	11.2mm (0.441in)
	Drive end	12.1mm (0.476in)

   NOTE: Put bushes in clean engine oil for 24 hours before installing.
2. Remove old bearings from the end brackets.
3. Use a mandrel which has a shoulder and which fits into the bearing with a small clearance. Install the new bearings.
   Mandrel sizes for M50 and M45 starters are as follows:

Commutator end	12.71mm (0.5005in)
Intermediate	28.52mm (1.123in)
Drive end	17.03mm (0.6705in)

   IMPORTANT: Do NOT put a reamer through the bushes after installing. This will decrease the lubrication quality of the bearing.

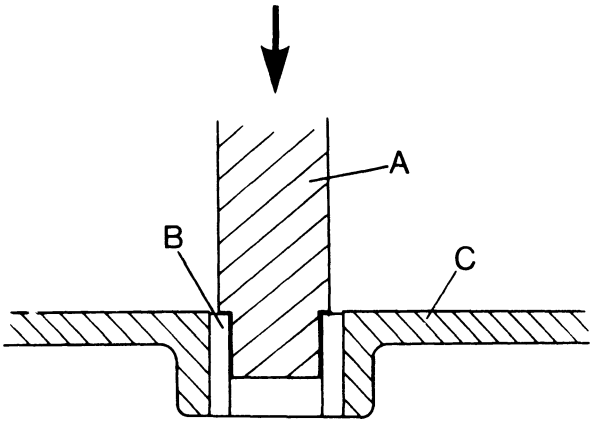

Figure H86
BEARING REPLACEMENT
A. Mandrel.
B. Bush.
C. End bracket.

Armature

1. Look for movement of the segments. Movement here can be caused by an increase in operating speed, check clutch and brake assemblies.
2. Look for damage or movement of solder connections. If there is any indication of a high operating temperature, look for cause before you install a new armature.
3. Check for any indication of armature to field winding contact. If damage is found, check the tightness of the screws which fasten the pole shoes. Make an inspection of the bearings for wear.

   Check the armature shaft for distortion. DO NOT try to correct any distortion of the shaft, install a new armature.
4. Connect a 110 volt supply and use a 15 watt test lamp to check the insulation as shown. Repeat the test on all segments of the commutator. If the lamp illuminates install a new armature. Make sure the circuit is not being completed through dirt.
5. Check the windings with 'growler' equipment according to manufacturers instructions.

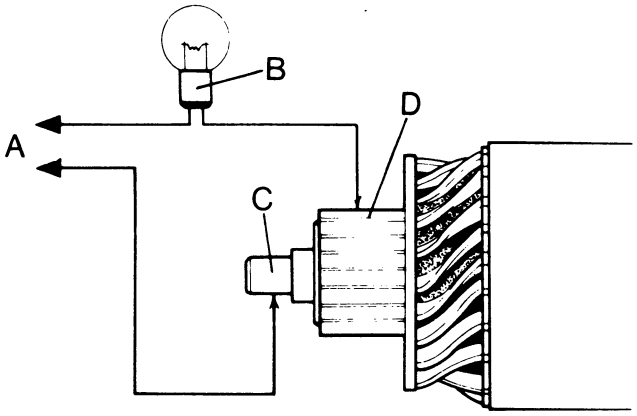

R78123

Figure H87
TESTING ARMATURE INSULATION
A. 110 volt AC supply.
B. 15 watt test lamp.
C. Armature shaft.
D. Commutator segments.

Roller Clutch

1. Check that the clutch locks in one direction C only and turns freely in the opposite direction B.
2. Make sure the assembly can move freely on the armature shaft.
3. Install a new unit when a defect is found. The unit is sealed and cannot be repaired.

IMPORTANT: Do NOT wash the unit in cleaning fluid or apply any lubrication.

4. Apply the following greases to the splines of the unit.
   Cold climates: Shell SB 2628
   Hot climates: Shell Retinax A

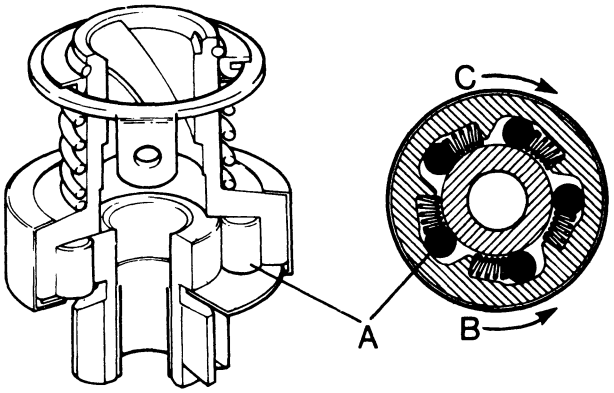

R78.124

Figure H88
ROLLER CLUTCH ASSEMBLY
A. Rollers.
B. Free direction.
C. Locked direction.

Plate Clutch

1. Hold the starter armature in a vice with soft jaw grips.
2. Put the plate clutch on to the armature shaft temporary.
3. Use a torque wrench to turn the pinion D counter-clockwise. The clutch will lose grip at 9–11kgm (66–80lbft) if set correctly.
4. To adjust the setting, disassemble the clutch and install or remove shims. These are between the backing ring and 1st outer plate F.

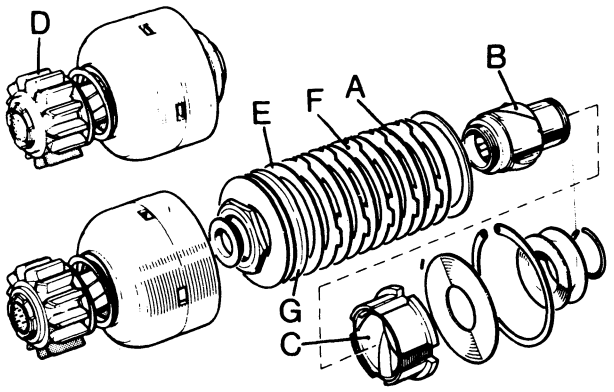

R78.125

Figure H89
PLATE CLUTCH ASSEMBLY
A. Clutch plate inner.
B. Driving sleeve.
C. Moving member.
D. Pinion.
E. Shims.
F. Outer clutch plate.
G. Backing ring.

Inertia Drive

1. Check the pinion teeth for wear and damage. Check flywheel ring gear also when damage is found.
2. To remove the assembly from the shaft, hold the armature in a vice by the square end.
3. Remove the split pin and nut or circlip and collar from the end of the shaft.
4. Remove spring, pinion and sleeve assembly.
5. Wash all parts in paraffin.
6. Make sure the pinion moves easily on the sleeve and the sleeve moves easily on the shaft. DO NOT put any lubricant on the assembly.

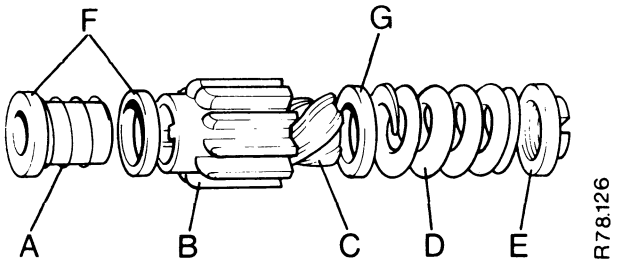

Figure H90
INERTIA DRIVE ASSEMBLY

A. Anti Rattle spring.
B. Pinion.
C. Sleeve.
D. Drive spring.
E. Thrust collar.
F. Spring retainers.
G. Buffer washer.

Solenoid

1. Check the springs for damage and weakness. The internal spring can be checked by pulling on the inner plunger.
2. To replace the contacts separate the terminal assembly from the body. Use a hot soldering iron to disconnect the two solder connections. Hit the terminals on the bench to remove the solder.
3. Put the solenoid in a vice with the terminals up.
4. Apply heat with the soldering iron to the terminals while pulling on the cover until free.
5. When assembling the terminals make sure the connections are clean and dry. Make sure the temperature of connections is correct before applying the solder.
6. Install the two screws which fasten the terminal assembly to the body. Tighten the screws to a torque of 2.5Nm (0.25kgm) (2lbft).

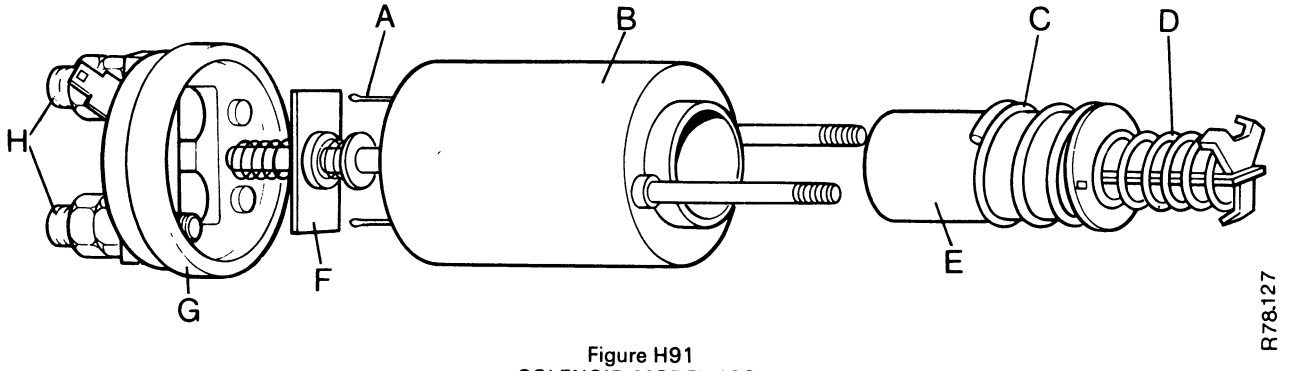

Figure H91
SOLENOID MODEL 19S

A. Coil connections.
B. Body.
C. Plunger spring.
D. Inner plunger spring.
E. Plunger.
F. Contact assembly.
G. Terminal assembly.
H. Main terminals.

ASSEMBLY Figure H

1. Make sure all parts are clean and have been checked.
2. Put the shims and intermediate bracket N (M50 and M45) onto the armature.
3. Install drive end bracket H on to the armature shaft.
4. Install armature L complete with drive end bracket into the yoke P.
5. Put the commutator end bracket into position on the end of the shaft. Make sure the thrust washers and brake shoes are assembled correctly.
6. Install field brushes E into the holders and push the end bracket fully into position. Make sure brush wires are not between end bracket and yoke.
7. Install the two bolts F, which holds the complete assembly together, through the starter.

   Tighten the bolts to a torque setting of:
   $\frac{1}{4}$in bolts 11Nm, 1kgm, 8lb ft.
   $\frac{5}{16}$in bolts 13Nm, 1.3kgm, 10lb ft.
8. Install a new retainer ring on the shaft end of the 3M100 type starter. Install end cap.
9. Use a dial gauge to check the amount of free movement at the end of the shaft. (M50 and M45 types.)

   The amount must be from 0.13 to 0.51mm (0.005 to 0.020in). Adjust by adding or subtracting shims from between the intermediate bracket N and the armature.
10. When the movement is correct, remove the bolts F which fasten the assembly together. Remove the end bracket H.
11. Install the drive pinion assembly M on to the shaft.

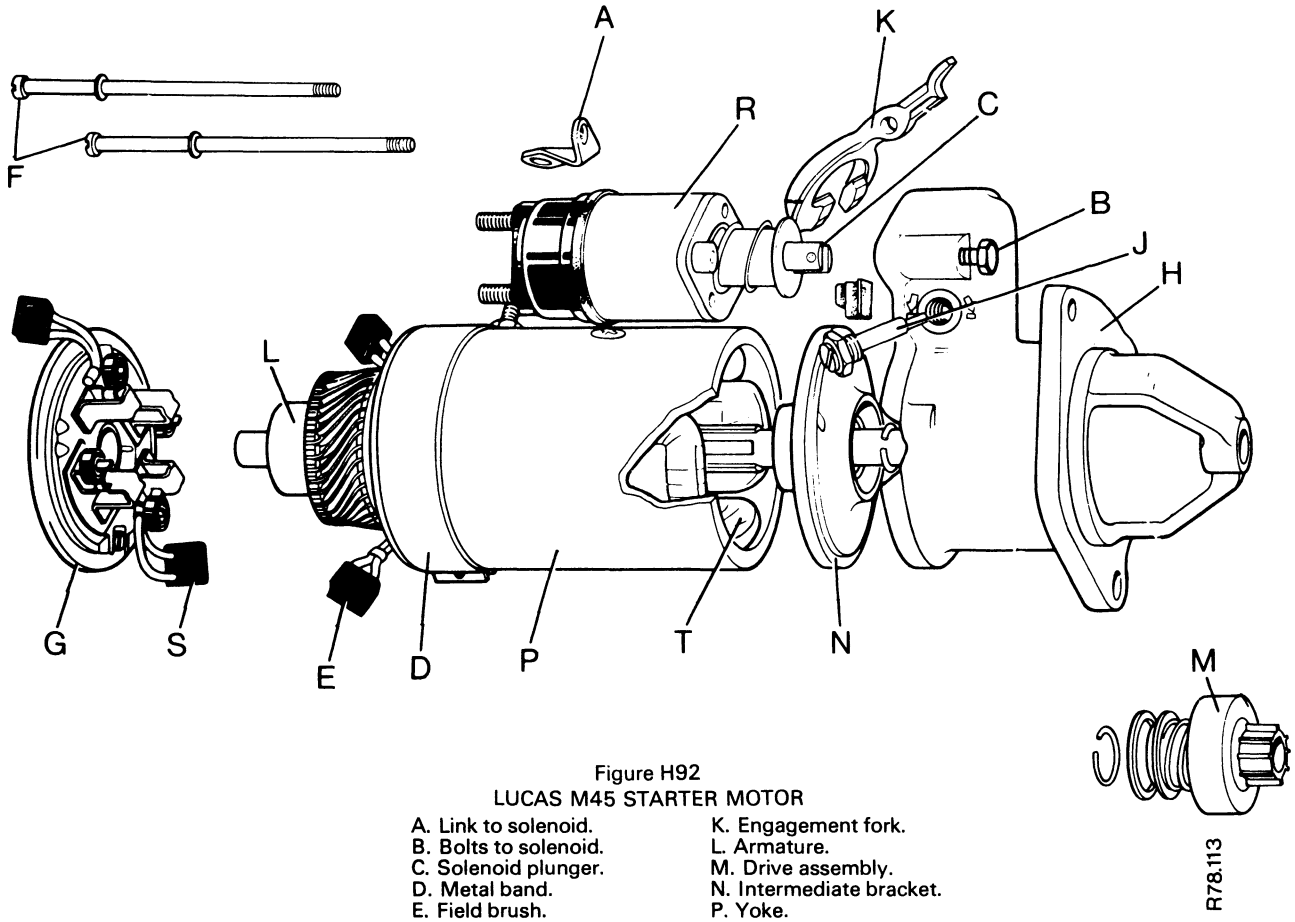

Figure H92
LUCAS M45 STARTER MOTOR

A. Link to solenoid.
B. Bolts to solenoid.
C. Solenoid plunger.
D. Metal band.
E. Field brush.
F. Through bolts.
G. Commutator end bracket.
H. Drive end bracket.
J. Pivot pin.
K. Engagement fork.
L. Armature.
M. Drive assembly.
N. Intermediate bracket.
P. Yoke.
R. Solenoid.
S. Ground brush.
T. Field winding.

12. Install the engagement fork and end bracket. Install the two fastening bolts. Install the pivot pin for the fork but do not lock it.
13. Adjust the drive pinion to bracket clearances as follows (M50 and M45 types).
    (a) Connect a 6 volt battery to the starter. This will prevent damage to the solenoid during the adjustment.
    (b) Measure the gap as shown in Figure H93, between the pinion and the end bracket.
    (c) The gap must be set to the following dimensions.

Starter Type	Gap Setting
M45 roller clutch:	0.13–0.38mm (0.005–0.015in)
M45 plate clutch:	0.51–0.76mm (0.020–0.030in)
M50 roller clutch:	0.13–1.14mm (0.005–0.045in)

    (d) Adjust by turning the pivot pin. The arrow on the pin must not be moved beyond the arrows on the bracket. Hold the pinion towards the armature, with a small amount of pressure, while adjusting.
    (e) Tighten the locknut of the pivot pin when the clearance is correct. Apply paint or Loctite to the threads of the pin.
14. Install the solenoid to M50 and M45 starters.

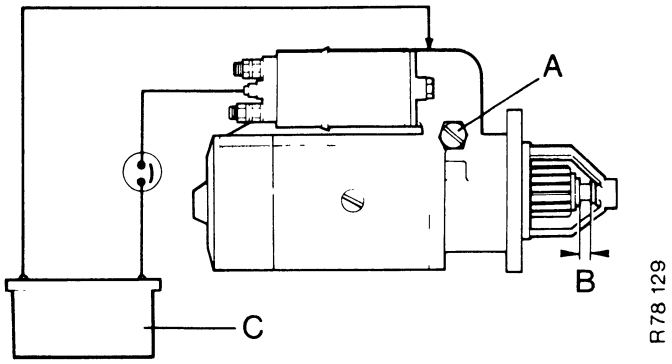

Figure H93
PINION SETTING DISTANCE
A. Pivot pin.
B. Clearance.
C. 6 volt battery.

BOSCH STARTER MOTOR

The Bosch starter motor has been installed on some tractors. All four cylinder engines can have a Bosch or a Lucas starter motor.

On 14 series tractors a 0.060in shim is installed between the starter flange and the engine.

IMPORTANT: DO NOT replace a Lucas starter with a Bosch starter on the 14 series tractor.

To install a Bosch starter to other models the terminal holes have to be increased to 10.3mm ($\frac{13}{32}$in).

Contact any Bosch dealer for service information.

Repair information is included in Bosch publications:

VDT-WPE 510/2-6B
VDT-WPE 510/2B-AL

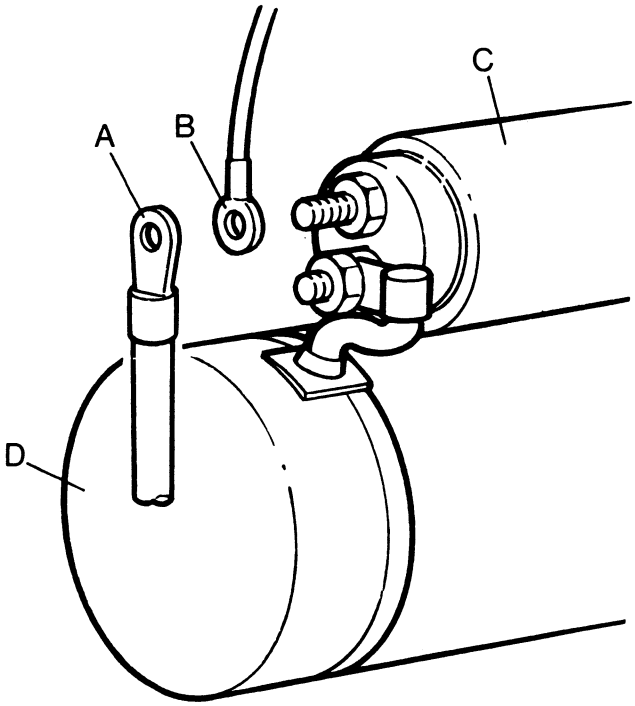

R 78.130

Figure H94
BOSCH STARTER CONNECTIONS
A. Battery cable.
B. Brown wire.
C. Solenoid.
D. Starter motor.

WIPER MOTOR

HOW IT WORKS

Two permanent magnets A are used for the field supply of the motor. The armature B receives a supply of current from the battery when the operator closes the wiper switch. This actuates the motor.

The armature shaft has a worm-gear C on the commutator end. This is engaged with a gear-wheel D in the gearbox of the motor. The gear-wheel is connected to a cable-rack E by a connecting rod F. The cable rack is free to move inside a tube G which is fastened at each end. The other end of the cable rack is engaged with a gear-wheel and spindle assembly H. The wiper arm and blade are fastened to the spindle.

When the armature turns, it turns the gear wheel. The connecting rod moves the cable rack backwards and forwards through the tube. The movement of the cable rack causes the gear wheel and spindle assembly to make a part turn one way then the other. This moves the arm and blade across the windscreen.

Limit Switch

This is installed in the terminal assembly J of some wiper motors to provide a parking facility.

It permits the current to continue to the motor after the wiper switch has been put to 'OFF'. When the wiper arm reaches one side of the windscreen the limit switch stops the motor.

The switch is actuated by a cam on the gear-wheel pushing against the plunger of the switch. The plunger opens a set of contacts which interrupts the circuit and stops the motor.

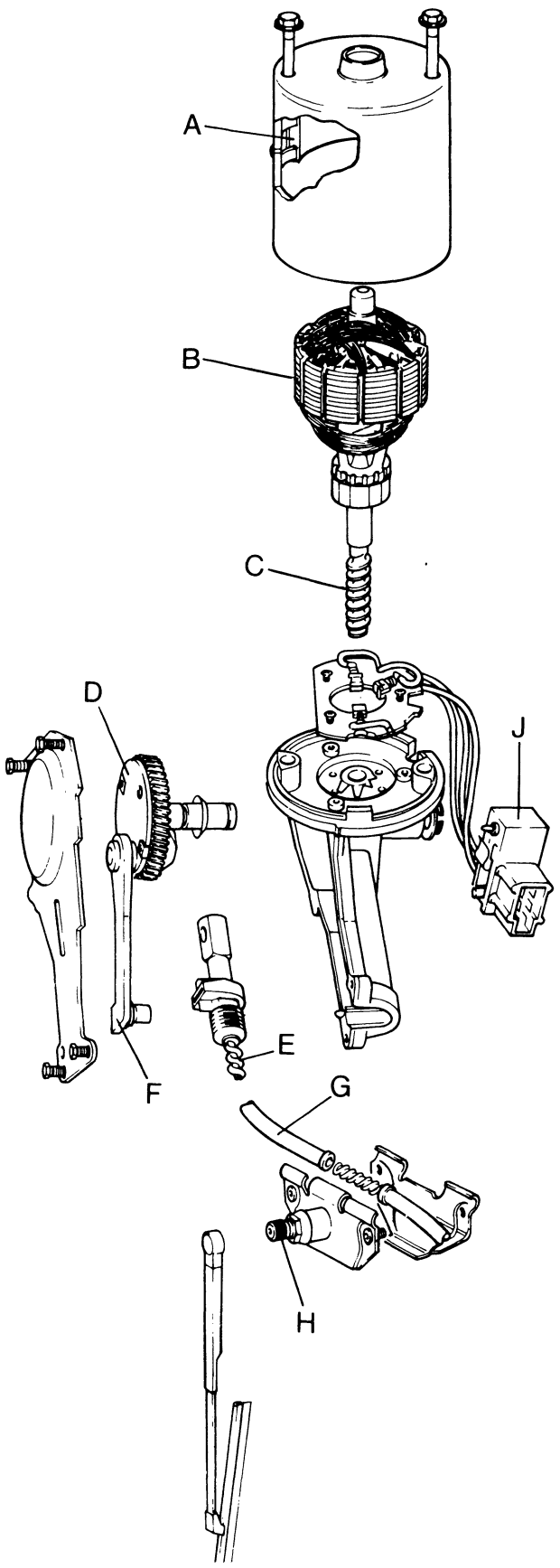

Figure H95
THE WIPER MOTOR ASSEMBLY
A. Magnets.
B. Armature.
C. Worm gear.
D. Gear wheel.
E. Cable rack.
F. Connecting rod.
G. Cable tube.
H. Drive spindle.
J. Terminal assembly.

R 78.131

FAULT FINDING

TEST 1: Slow Operating Speed

1. Make sure the windscreen is wet enough.
2. Check that the arm can move away from the windscreen.
3. Check that the correct arm tension spring is installed.
4. If these checks are correct, disconnect the cable-rack from the motor.
5. Remove the arm and blade assembly from the wheel-box spindle.
6. Push the cable-rack completely into the tube.
7. Connect a spring-balance A to the end of the cable-rack B.
8. Pull the cable-rack out of the tube with the spring-balance. The maximum force needed must not be more than 27N (6lbf).
9. If the force needed is more than this amount, check the tube and cable-rack for damage. If any damage is found, install new parts.
10. If the cable-rack and tube are in good condition: Disconnect the rack from the wheel-box and check the spindle for seizure.
11. When all mechanical parts are checked and found acceptable, check the motor. Connect an ammeter in series with the motor to check the current it is using. Compare this with the amount shown in the DATA SECTION.

    Remove the cover from the gearbox and check the gearwheel revolutions against time.
12. Compare the speed of the gearwheel with that shown in the DATA SECTION.

TEST 2: Wiper will not operate

1. Check the circuit fuse, if a failure is found, look for possible cause before installing new fuse.
2. Check other circuits which use the same fuse.
3. Make sure all connections are clean and tight, especially ground connection.
4. Use a voltmeter or test lamp to check for a connection between the supply and ground as follows: Connect the test equipment from a supply to the positive terminal of the wiper motor.

    If the lamp illuminates or the voltmeter shows a reading, the supply wire is making a connection to ground.

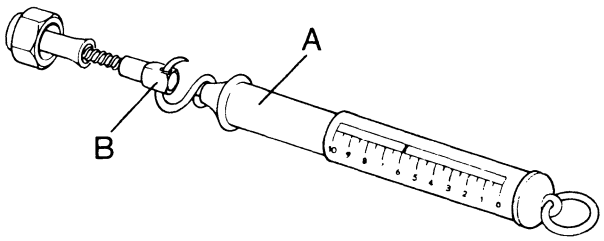

R 78 132

Figure H96
CHECKING CABLE-RACK
A. Spring-balance.
B. Cable rack.

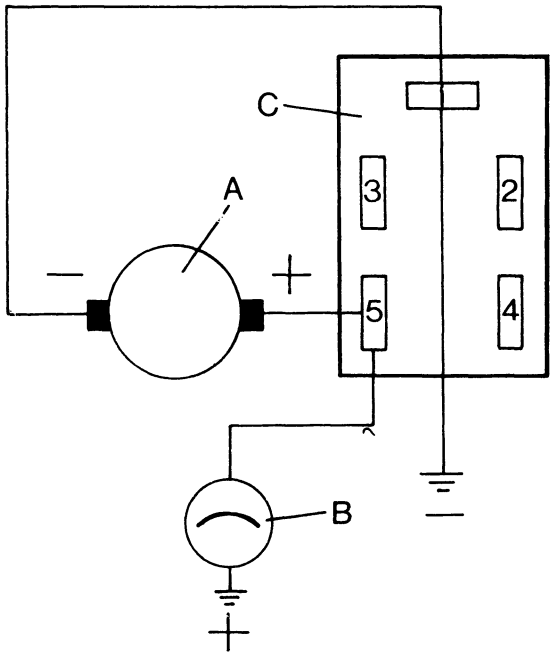

R78.133

CHECKING CURRENT USED
A. Wiper motor.
B. Ammeter.
C. Wiper switch.

5. To check the supply, disconnect the harness plug from the motor.
6. Put the wiper switch to the 'on' position.
7. Check for a supply voltage between terminals 1 and 5 of the harness plug.
8. If there is no indication of voltage, disconnect the equipment from terminal 1 and connect it to ground.
   If the test equipment now shows a voltage there is a failure in the ground wire.
9. Check for supply voltage at both terminals of the wiper switch. If there is supply in and not out, with switch 'on', install a new switch. If there is no supply check for broken, dirty or loose connections.
10. If the supply voltage is coming out of the switch but not reaching the motor check wire. Install a new wire if necessary.

TEST 3: Arm not parking.

This facility is only installed on some motors. Check if yours is of this type.

1. Put wiper switch to 'OFF' position.
2. Disconnect the harness plug from the motor.
3. Use a voltmeter or test lamp to check the voltage between terminals 1 and 4 of the plug. This voltage must be the same as the supply voltage.
4. Check connection at the supply if no voltage is shown.
5. Now connect the test equipment between terminals 1 and 5 of the plug. Connect a jumper wire between 2 and 4 as shown.
   The test lamp will illuminate or the voltmeter will show the supply voltage if limit switch has a failure.

NOTE: To test internal parts of the motor, see REPAIR SECTION.

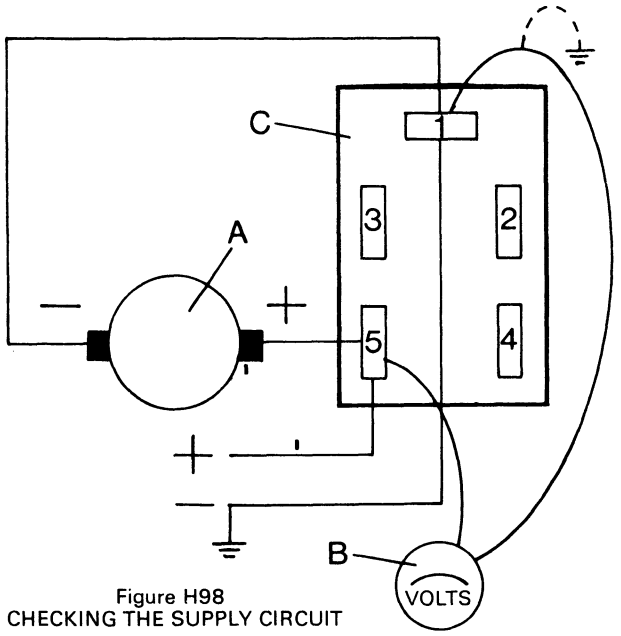

Figure H98
CHECKING THE SUPPLY CIRCUIT

R 78.134

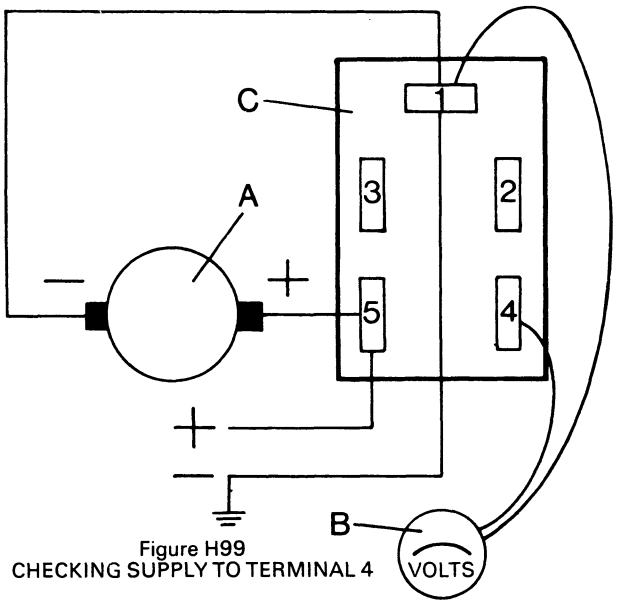

Figure H99
CHECKING SUPPLY TO TERMINAL 4

R 78.135

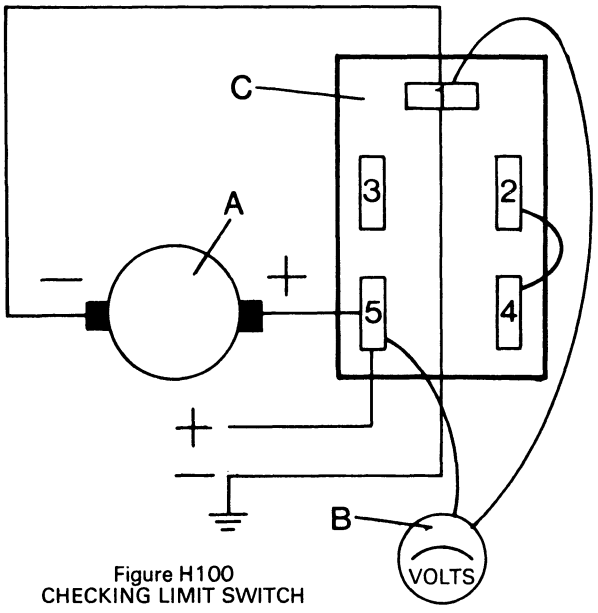

A. Wiper motor.
B. Voltmeter.
C. Wiper switch.

Figure H100
CHECKING LIMIT SWITCH

R 78.136

MAINTENANCE AND REPAIR

TYPE: Lucas 14W single speed, self parking on De-Luxe cab.

MAINTENANCE

1. Check the tightness of the bolts which fasten the motor to the cab.
2. Make sure the wire connections are clean and tight, especially the ground wire.
3. Check the condition of the blade at regular intervals.

DISASSEMBLY

1. Remove the arm and blade K.
2. Disconnect the terminal assembly J.
3. Remove the bolts which fasten the wiper motor to the cab.
4. Remove the gearbox cover screws.
5. Remove the circlip which fastens the connecting rod to the crank pin.
6. Remove the connecting rod F from the gearwheel D and cable-rack E.
7. Remove the flat washer from the crankpin.
8. Disconnect the cable-rack from the gearbox and remove the motor from the tractor.
9. Remove the circlip from the end of the gearwheel shaft. Make sure the shaft has no sharp edges before pulling it through the bearing.
10. Remove the dished washer under the gearwheel.
11. Remove the two bolts which fasten the yoke to the gearbox.
12. Remove the yoke and armature B from the gearbox.
13. Put the yoke away from metal particles which can be pulled on to the pole magnets.
14. Remove the brush and terminal assemblies from the gearbox.

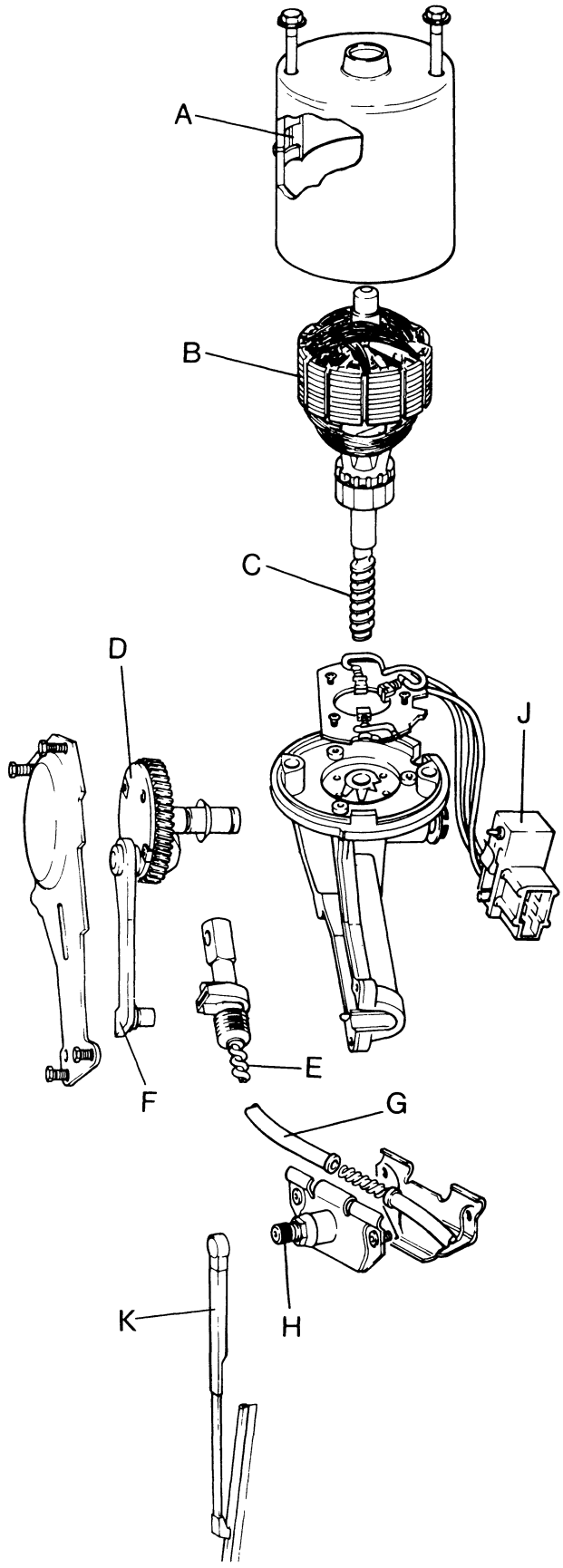

Figure H101
WIPER MOTOR

A. Magnets.
B. Armature.
C. Worm gear.
D. Gearwheel.
E. Cable-rack.
F. Connecting rod.
G. Cable tube.
H. Drive spindle.
J. Terminal assembly.
K. Arm and blade.

TEST AND REPAIR

Armature

1. Check the armature insulation as follows: Connect a 110 volt supply to the armature shaft. Connect a 15 watt test lamp to a segment of the commutator. Repeat test on all segments. Install a new armature if the lamp illuminates.
2. Check the commutator for damage and wear. Remove small amounts of damage with fine glass paper. Deep damage can be removed with a lathe but the smallest possible cut must be taken. Remove particles of copper from between the segments after cutting.
3. Check for damage to windings, solder connections and worm gear. Install a new armature if any damage is found.

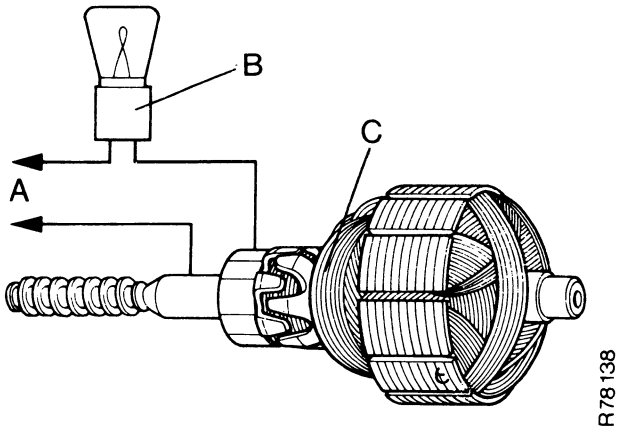

Figure H102
ARMATURE INSULATION TEST
A. 110 volt AC supply.
B. 15 watt test lamp.
C. Armature.

Brushes

1. Check brushes for damage.
2. Measure the length of the brushes. If 5mm ($\frac{3}{16}$in) or less install new brushes.
3. Make sure the brushes move easily in the holders.
4. Check brush spring pressure with a push type gauge as shown or a dial gauge.

   Push brush to broken line and check the reading. The pressure must be 1.7Nm (170g f) (6oz f).

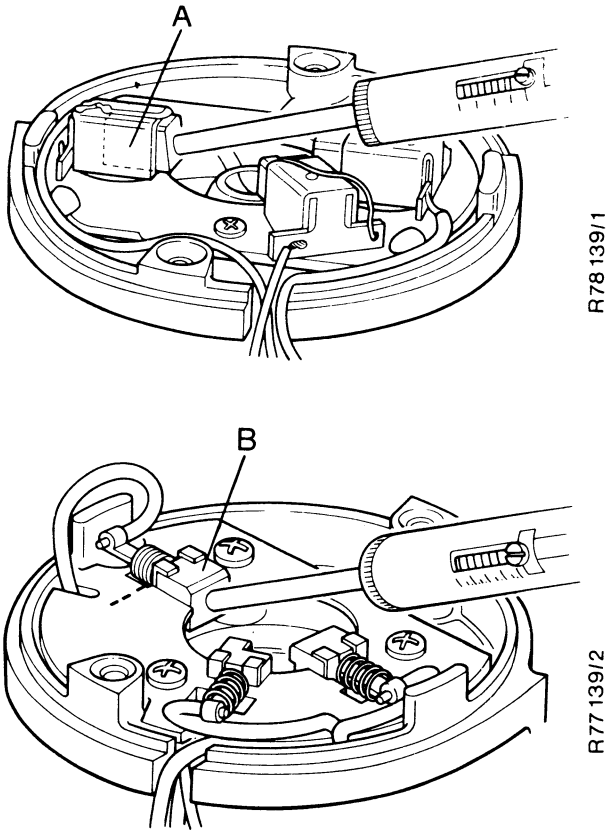

Figure H103
CHECKING BRUSH SPRING PRESSURE
A. Early type.
B. Later type.

Gearwheel Assembly

1. Check the teeth for wear and damage.
2. Check the shaft for distortion, wear and damage.
3. Make sure the crankpin is installed in the correct position if the wheel and shaft have been separated. See Figure H104.

NOTE: The gearwheel and shaft are supplied as an assembly if it is necessary to install a new item.

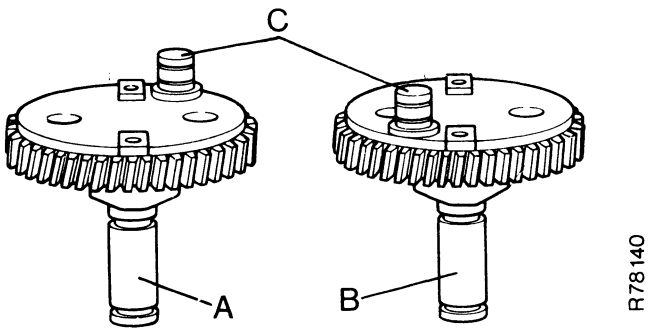

Figure H104
ALTERNATIVE POSITIONS OF CRANKPIN
A. Parking with cable rack retracted.
B. Parking with cable rack extended.
C. Crankpin positions.

Limit Switch

1. Remove switch from motor by lifting retaining post end of switch and moving it in direction of arrow.
2. Push the plunger of the switch fully in. Let it return to the original position. Measure the plunger. The plunger must be 7mm ($\frac{9}{32}$in) out of the switch.
3. See FAULT FINDING for electrical checks.

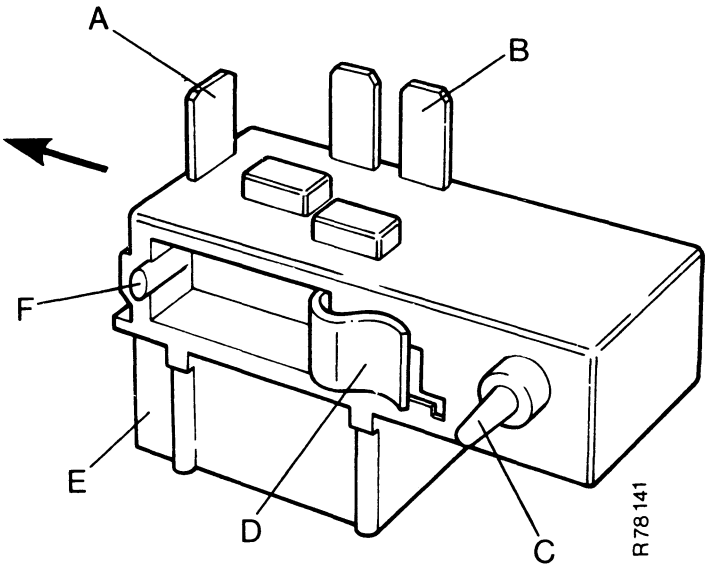

Figure H105
LATER DESIGN LIMIT SWITCH
A. Negative (−) terminal.
B. Positive (+) terminal.
C. Plunger.
D. Retainer clip.
E. Terminal connector.
F. Retainer post.

ASSEMBLY

1. Fasten the brush and terminal assemblies to the gearbox.
2. Apply Shell Turbo 41 oil to the bearings and armature shaft bearing surfaces.
3. Apply Ragosine Listate grease to the worm-gear on the armature.
4. Install the armature into the gearbox.
5. Make sure the inside of the yoke is clean. Make sure the thrust disc and oil pad are in position inside the yoke bearing. The disc goes in first with the felt oil pad on top.
6. Install the yoke on to the armature and gear-box.
   IMPORTANT: Align the mark on the yoke with the arrow on the gearbox to make sure of correct rotation.
7. Install and tighten the two bolts which holds the assembly together. Tighten to a torque of 1.35–1.80Nm (0.138–0.184kgm) (12–16 lb in).
8. Adjust the armature end movement if an adjustment screw is installed.
   Turn the adjustment screw clockwise until it contacts the end of the armature.
   Then turn the screw counterclockwise $\frac{1}{4}$ of a turn. Tighten the locknut of the adjustment screw.

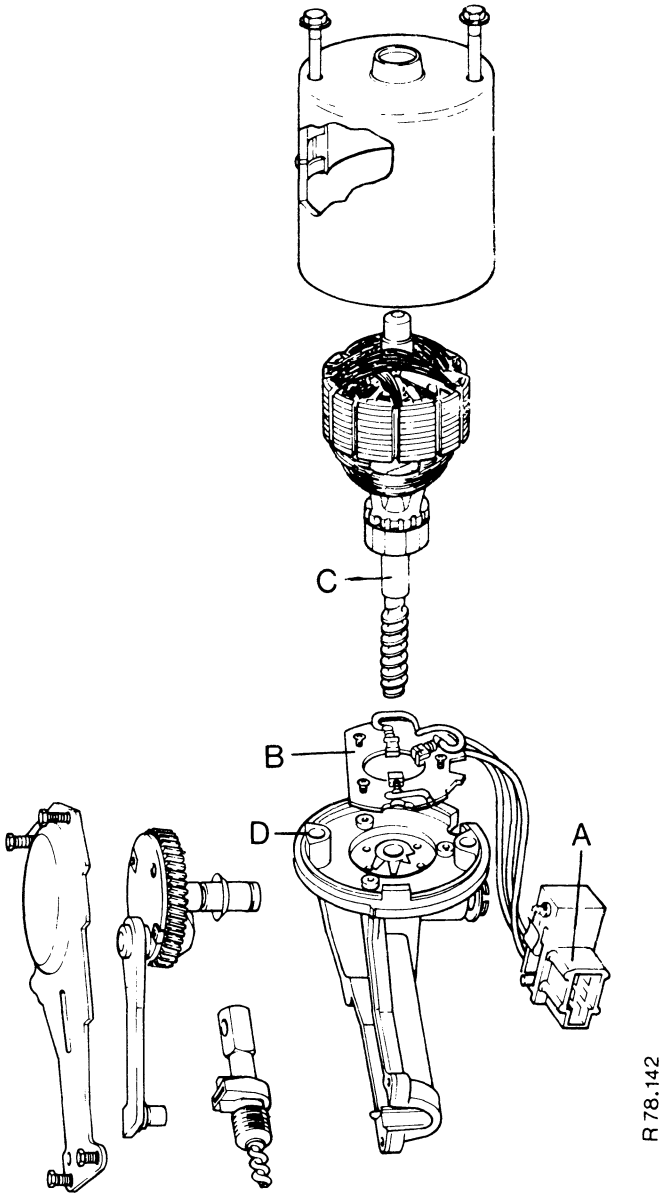

Figure H106
WIPER MOTOR ASSEMBLY
A. Terminal assembly.
B. Brush plate.
C. Armature.
D. Gearbox.

GAUGES

HOW THEY WORK

THE FUEL GAUGE

The fuel gauge circuit is energised when the starter key A is turned to the 'ACC' position.

The gauge circuit has two coils. One pulls the needle towards the full mark. The other pulls the needle towards the empty mark. The needle moves towards the coil with the most current going through it.

The fuel tank unit has a rheostat B activated by the movement of the float. When the tank is empty the resistance of the rheostat is at a minimum.

This puts a low resistance across the full coil. This reduces the current through the full coil C. The empty coil D then pulls the needle to the empty mark. When fuel is added to the tank the float moves up with the fuel. It increases the rheostat resistance across the full coil. Current starts to move through the full coil and the needle moves towards FULL (F). All positions in between FULL and EMPTY are shown by a balance between the currents in the two coils.

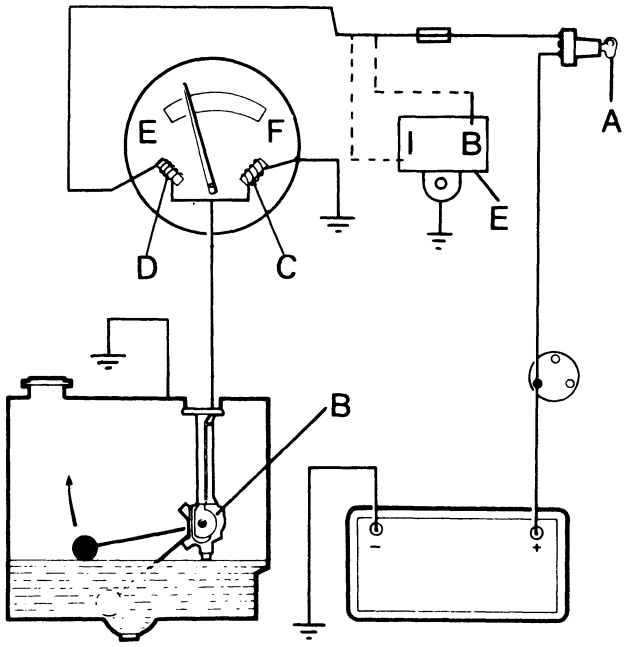

Figure H107
FUEL GAUGE CIRCUIT

A. Starter key.
B. Rheostat.
C. Full coil.
D. Empty coil.
E. Voltage stabiliser 885 model only.

THE TEMPERATURE GAUGE

The sender unit A installed in the engine coolant system has a resistor inside. The resistor reacts to temperature, increasing resistance when the coolant temperature increases.

The resistance of the sender is between the cold coil and ground. As the temperature and resistance increases, the current through the cold coil decreases. This lets the hot coil pull the needle towards the hot mark. When the temperature of the coolant and the resistance decreases, more current flows through the cold coil. This pulls the needle more strongly towards the cold mark. The pull of the cold coil is then stronger than the pull of the hot coil.

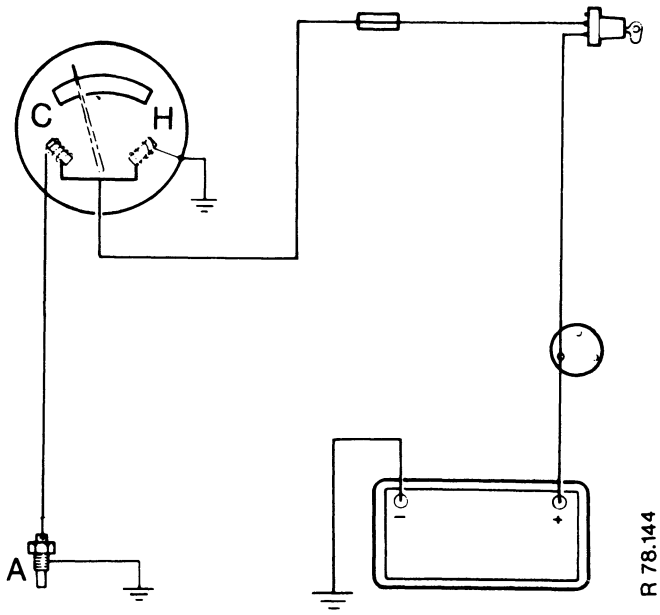

Figure H108
TEMPERATURE GAUGE CIRCUIT

A. Sender unit.

FAULT FINDING

FUEL GAUGE

TEST 1: Tank Full

1. Turn the starter key to the 'ACC' position.
2. If the needle does not move check for broken or disconnected wire between switch and gauge.
3. If the needle moves to EMPTY check the wire from the gauge to the tank unit for a connection to ground.
4. If the gauge to tank unit wire is good make sure the gauge has a good connection to ground through the instrument panel.

IMPORTANT: Do not connect the two wires on the gauge together, this will cause damage to the tank unit.

TEST 2: Tank Not Full

1. If the needle moves to FULL when the starter switch is turned to the 'ACC' position. Make sure the tank unit has a good connection to ground.
2. Check the wire between the gauge and the tank unit for dirty or loose connections. Check for a break in the wire.
3. If the gauge does not show a reading, remove tank unit from tank. Keep the wire to the gauge connected.
4. Make a good connection to ground from the unit. Move the float up and down by hand and look at the gauge. This will show if the gauge is working correctly.

TEST 3: 885 Tractors only

On the 885 tractor a voltage stabiliser A is included in the circuit. The stabiliser has two connections; 'B' from the battery, 'I' to the gauge. The unit is connected to ground through the bracket.

1. Check the voltage at 'B' with a voltmeter. This must be battery voltage.

NOTE: This does not include the 885Q and 885N models, which have different gauges.

2. Check the voltage at 'I'; if zero voltage is shown the unit must be replaced with a new unit.

IMPORTANT: Do not connect gauge wires together; this will cause damage to the tank unit.

Gauges, tank units and stabilisers are not adjustable. Do not try to disassemble.

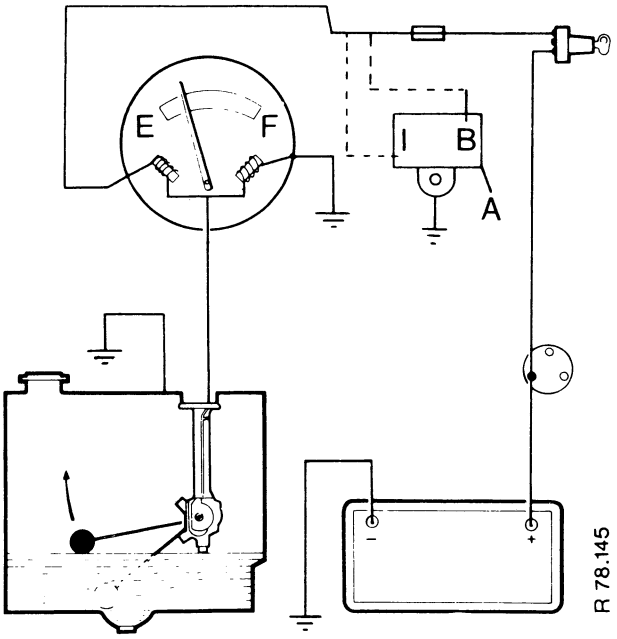

Figure H109
FUEL GAUGE CIRCUIT
A. Voltage stabiliser.

TEMPERATURE GAUGE

TEST 1: Engine Hot

If the needle does not move towards HOT when the engine temperature increases:

1. Disconnect the wire A from the sender unit and connect the wire to ground.
2. If the needle then moves to HOT the sender unit must be replaced with a new unit.
3. If the needle does not move, check the wiring for breaks or bad connections.

TEST 2: Engine Cold

If the needle moves to HOT when the starter key is turned to the 'ACC' position:

1. Check the wire from the gauge to the sender unit for a connection to ground.
2. Check that the gauge is making a good connection to ground through the instrument panel.
3. Install a new gauge to compare results with the old gauge and to check other parts.

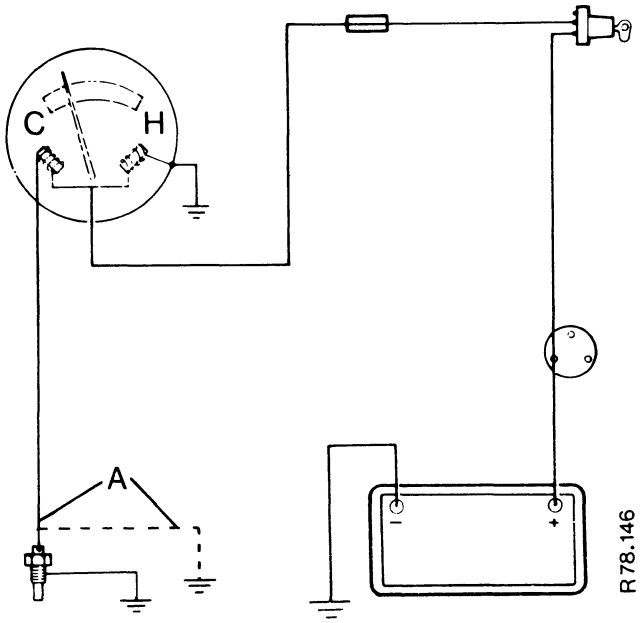

Figure H110
TEMPERATURE GAUGE CIRCUIT
A. Wire to sender unit.

WARNING LAMPS

HOW THEY WORK

ENGINE OIL PRESSURE

Battery current illuminates the lamp A when the starter key is turned to the ACC position. The circuit is connected to earth through the pressure switch B contacts. When the engine is started the oil pressure opens the contacts. This interrupts the circuit and the lamp stops illuminating. If the oil pressure decreases below the setting of the pressure switch the contacts close and the lamp illuminates.

HYDRAULIC OIL FILTER

Battery current illuminates the lamp C when the starter key is turned to the ACC position. The circuit is connected to ground through the dynamo or alternator. When the engine is started the dynamo or alternator output causes the lamp to stop illuminating.

The output current is prevented from going through the warning lamp by a diode D included in the circuit.

If the hydraulic filter becomes restricted the contacts of the vacuum switch E close. This re-connects the circuit to ground illuminating the warning lamp again.

The vacuum switch is installed in the oil pump suction pipe.

NOTE: This is not installed on later tractors with external hydraulic filter.

NO CHARGE

Battery current illuminates lamp F when the starter key is turned to ACC. The circuit is completed to ground through the dynamo or alternator. When these start to charge the voltage difference at the warning lamp terminals decreases. This causes the lamp to stop illuminating.

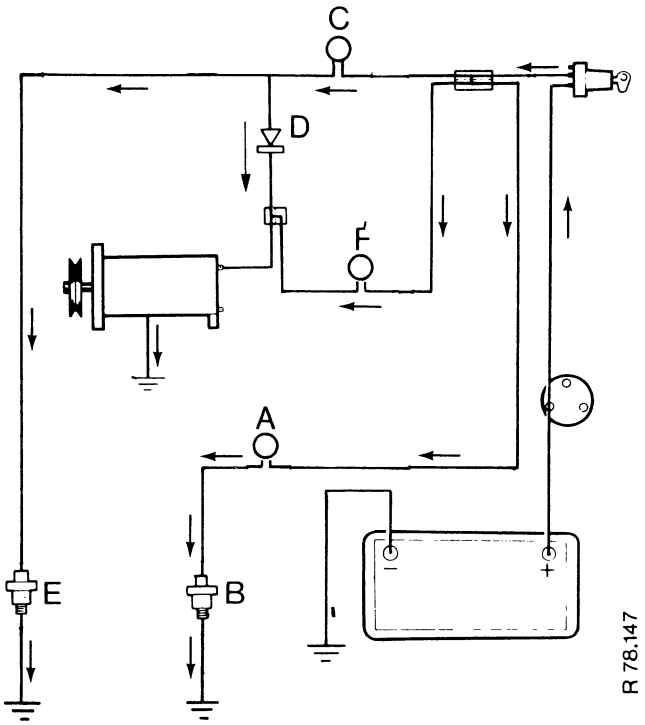

Figure H111
CIRCUIT WITH DYNAMO

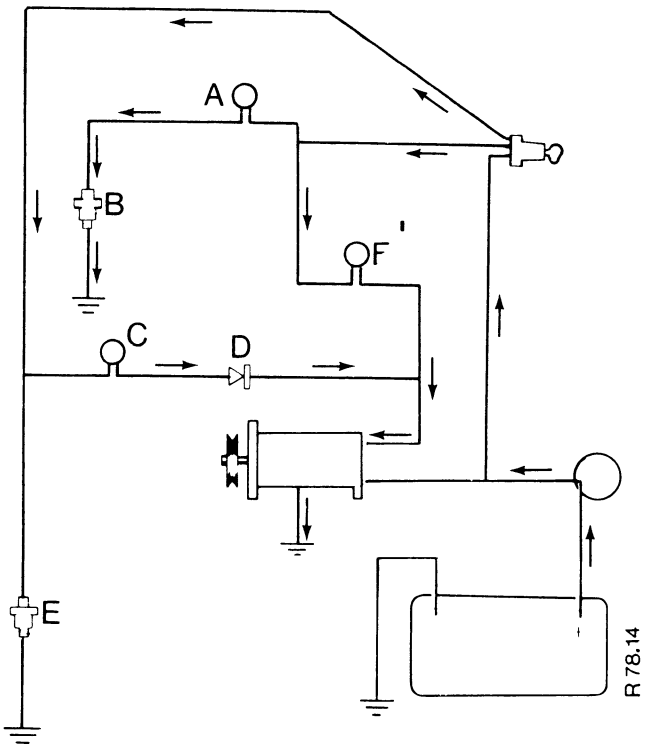

Figure H112
CIRCUIT WITH ALTERNATOR

A. Oil pressure warning.
B. Oil pressure switch.
C. Hydraulic warning.
D. Diode.
E. Vacuum switch.
F. No charge warning.

THERMOSTART

HOW IT WORKS

When the starter key A is turned to the HEAT position current energises the unit B in the inlet manifold.

Current heats a coil C which opens the fuel valve D and then changes the fuel into vapour. Another coil E causes the vapour to burn which warms the air going into the cylinders. This makes the engine easier to start in very cold weather.

The unit is still energised when the starter is being operated.

IMPORTANT: Always disconnect the thermostart wire if ether or similar fluid is used for starting.

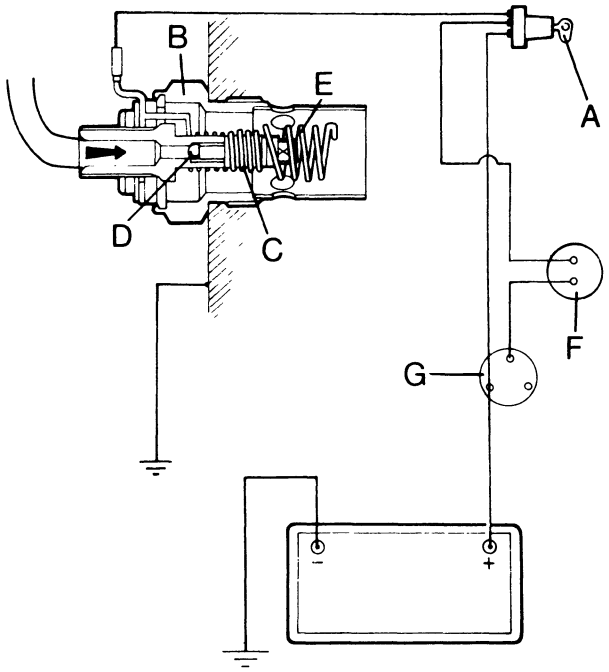

Figure H113
THE THERMOSTART CIRCUIT

A. Starter key.
B. Thermostart unit.
C. Valve coil.
D. Fuel valve.
E. Burner coil.
F. Starter safety switch.
G. Starter solenoid.

WARNING — Ether or similar starting fluid must not be used without first following the procedure below. The Thermostart heater is energised when the starter is operated. Ether or starting fluid can cause an explosion or fire if it comes into contact with the Thermostart coil. This can cause injury.

PROCEDURE, ETHER

If ether starting fluid has to be used in an emergency, the following procedure and sequence **must** be followed.

1. Disconnect the electrical supply wire from the Thermostart heater.
2. Operate the starter motor for 10 seconds, **with the stop control in the stop position,** to remove any fuel before using ether.
3. Put a small amount of ether in the air cleaner inlet while the starter is being operated.

Do not put ether in the intake unless the starter motor is rotating the engine.

Do not use ether with the Thermostart connected.

Do not use ether if the battery is discharged.

Damage will occur if ether is used carelessly.

FAULT FINDING

TEST 1

1. Remove the pipe between the air cleaner and the inlet manifold.
2. Turn the starter key to 'HEAT' and hold this position for 10 to 25 seconds.
3. Make sure the gear levers are in the neutral position, then operate the starter.
4. Get assistance to look into the manifold to see if the thermostart is working. This will be shown by light from the burning fuel.
5. If the unit is not working return the key to 'OFF' and do test 2.

TEST 2

1. Connect a voltmeter between the terminal on the thermostart and ground.
2. Turn the starter key to 'HEAT' and check the voltmeter.
   If the voltmeter does not show a voltage check the wire and connections to the starter switch.
3. If current is reaching the thermostart disconnect the fuel pipe A and check for a restriction of the fuel flow.

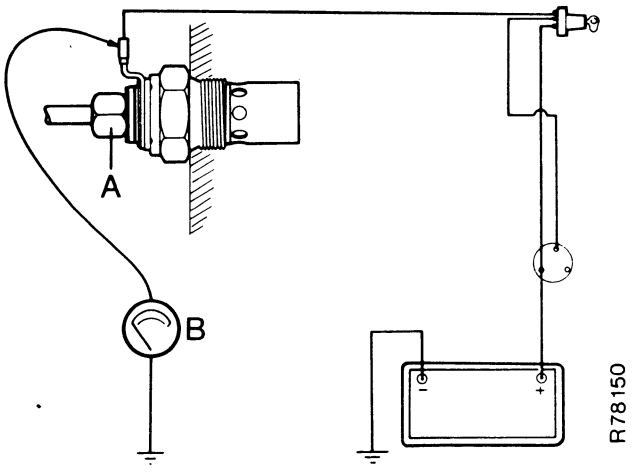

Figure H114
CHECKING CURRENT SUPPLY

A. Fuel pipe connection.
B. Voltmeter.

WIRING

GENERAL DESCRIPTION

The tractor wiring is divided into three main harnesses. These are: Engine harness; Instrument panel harness; Rear harness. A fourth harness is added when a cab is added to a tractor. When a repair has to be made to the wiring it can be easier to replace one or two wires. If the defect includes more than one or two wires it is best to install a harness.

To make vehicle wiring flexible it is made with a number of single thin wires of the same thickness. The amount of single wires and the thickness of each is shown by the wire size number. Example: 44/012 is an indication that the wire has 44 single wires and each single wire has a thickness of 0.012in. This is the same as 44/030, 44 single wires of 0.30mm thickness.

The wire sizes shown in the chart will normally be those used on a tractor. This does not include the starter cables and H.T. ignition cables on gasoline engines.

The diameter of a wire used is controlled by the amount of current flowing in the circuit. Also the voltage being used must not decrease by more than 10% after going through a wire. For a 12 volt system for example, the voltage must not decrease by more than 1.2 volts.

Never replace the original wire of a circuit with a wire of a smaller diameter. Use a micrometer to measure the single wires and make a count of the amount. Use the next largest size if the correct size is not available.

A large decrease in voltage will cause a decrease in the performance of the electrical unit.

CAUTION Always use the correct size wire for the job. A smaller wire will cause resistance to current. This will increase the temperature of the wire and cause the wire to burn and start a fire.

WIRE DETAILS

Number and diameter of wires		Cross-section area of conductor		Resistance per metre at 20° Celcius	Approximate current rating	Nearest American gauge size
mm.	inches	sq. mm.	sq. inches	ohms	amperes	
14/0·25	14/·010	0·69	0·0011	0·0271	6·00	19
14/0·30	14/·012	0·99	0·0015	0·0188	8·75	17
28/0·30	28/·012	1·98	0·0031	0·0094	17·50	14
44/0·30	44/·012	3·11	0·0048	0·0060	27·50	12
65/0·30	65/·012	4·59	0·0071	0·0041	35·00	10
84/0·30	84/·012	5·94	0·0092	0·0031	45·00	9
97/0·30	97/·012	6·86	0·0106	0·0027	50·00	8
120/0·30	120/·012	8·48	0·0131	0·0022	60·00	8

When installing wiring make a note of the following details.

(a) Make sure all wiring is clear of any part of the tractor which gets hot.
(b) Keep the wiring away from sharp edges.
(c) Make sure the wiring is clear when assembling and installing parts of the tractor.
(d) Fasten the wiring correctly and make sure the wires are not putting tension on the connections.
(e) Always use the correct type of connectors for the job. Make sure the crimp type connector is the correct size before you fit it. Make sure connections made with solder are clean, dry and the correct amount of heat is applied.
(f) All wires have a colour code for easy identification. Letters or words can be used on wiring diagrams.
(g) The first letter or word is the main colour and the second is the line. Example: G/B = Green/Black. This is a green wire with a black line.

WIRING COLOUR CODE

B = Black
G = Green
K = Pink
N = Brown
P = Purple
R = Red
S = Slate (Grey)
U = Blue
W = White
Y = Yellow
LG = Light Green

CIRCUIT COLOUR CODE

The wiring is divided into a number of circuits and each circuit uses a colour for identification.

Examples:

Brown is used for the main supply. Current flows at all times in this circuit.
Brown/Yellow is used for the alternator circuit.
Green is used for the engine auxiliaries. This circuit only has current flowing when the starter key is in the 'ACC' position.
Green/Blue is used for the temperature gauge circuit.
Red is used for the side and rear lamp circuits.
Blue is used for the headlamp circuit.
White is used for the warning lamp circuit.
Black is used for all ground connections.
NOTE: The colour of a wire does not give any indication of the capacity of the wire. Do not confuse with wiring colour code.

WIRE SIZE	COLOURS Main — Line	APPLICATION
14/0·25mm (14/0·010in)	Green — White	Flasher switch to 7-way connector Right-hand flasher light and 7-point socket
	Green — Red	Flasher switch to 7-way connector Left-hand flasher light and 7-point socket
	Black — Lt. Green	Hydraulic filter switch light to 7-way connector
	Green — Blue	Temperature gauge to 10-way connector 10-way connector to temperature sender
	Green — Black	Fuel gauge to 10-way connector 7-way connector to vacuum switch 10-way connector to tank gauge unit
	White — Brown	Oil warning light to 10-way connector 10-way connector to oil warning switch
	Purple — Black	Horn push to 10-way connector 10-way connector to horn
	Brown — Yellow	Hydraulic filter and charge lamps to 10-way connector 10-way connector to alternator
	White	Starter switch to charge and oil warning lamps
	Green	To hydraulic filter warning light To temperature gauge, to fuel gauge, to horn, to flasher unit or hazard warning switch, flasher unit to trailer indicator light, flasher unit to flasher switch
	Black	All ground (chassis) connections
	Red	To tail lights, 7-point socket and rear number plate light
28/0·30mm (28/0·012in)	White — Red	10-way connector to starter solenoid Starter switch to 7-way connector 7-way connector starter safety switch 7-way to 10-way, 10-way connector to starter safety switch
	Brown — Red	Starter switch to 10-way connector 10-way connector to Thermostart
	Green — Brown	Flasher unit to flasher switch
32/0·20mm (32/0·008 in)	Red	Lighting switch to 7-way connector
	Green	7-way connector to harness
	Blue — White	Lighting switch to 10-way connector 10-way connector to headlamps (main beam)
	Blue — Red	10-way connector to headlamps (dip) Lighting switch to 10-way connector
	Green	7-way connector to main harness to stop lamp switch
	Green — Purple	Stop lamp switch to main harness to stop light connectors to 7-point socket
44/0·30mm (44/0·012in)	Brown	Starter to main harness Harness to alternator and 10-way connector Harness to starter switch and fuse Fuse to lighting switch
	Green	Starter switch to fuse

There are differences between wiring of each tractor according to the specifications. Changes occur with the type of fender used. Changes also occur where the hazard warning system is installed.
Tractors with cabs have several items of extra electrical equipment.

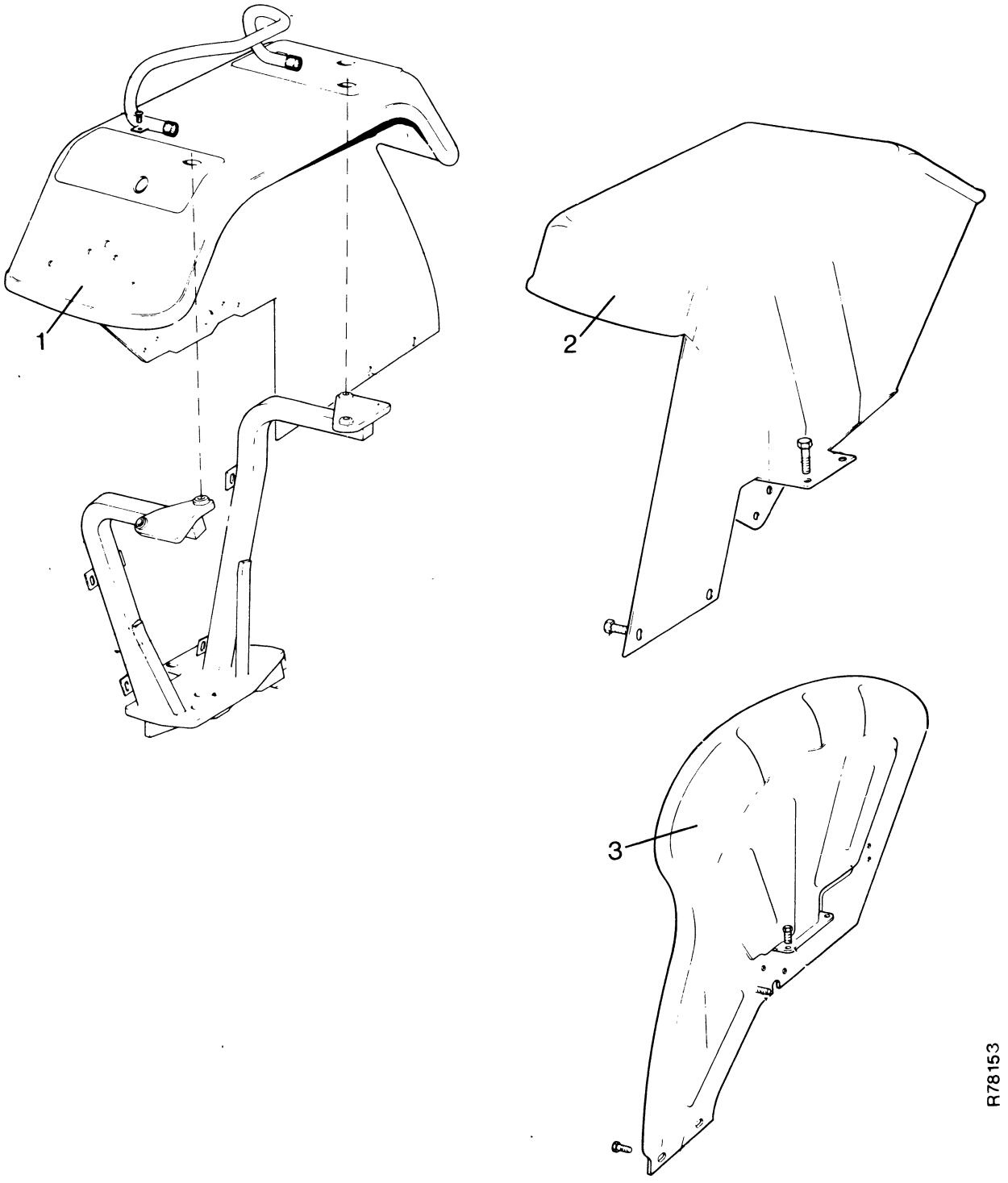

Figure H115
TYPES OF FENDER USED

1. Full fender, reinforced.
2. Full fender, light duty.
3. Shell or fan fender.

CRIMP CONNECTIONS

1. Use the stripper part of the tool A to remove 1cm of the insulation from the end of the wire.
2. Push the wire into the snap-in connector as far as it can go.
3. Use the crimping part of the tool B to make two crimps. One on the wire and one to grip the insulation.

Make sure the jaws of the tool close completely at C.

The tool can be used for the following sizes:
14/0.25mm (14/0.010in):
14/0.30mm (14/0.012in).
28/0.30mm (28/0.012in):
35/0.30mm (35/0.012in).

NOTE: A kit complete with pliers is available from your David Brown dealer, part number K.964626.

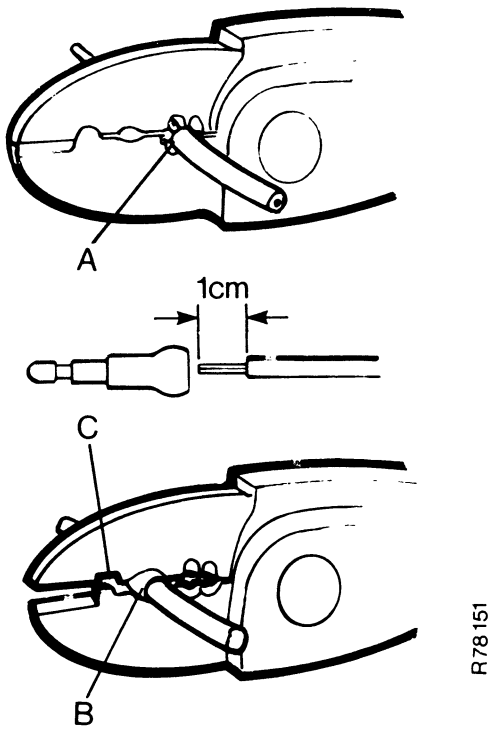

Figure H116
MAKING A CONNECTION USING A CRIMPING TOOL
A. Stripper jaws. C. Jaw stop.
B. Crimping jaws.

SOLDER CONNECTIONS

1. Put the insulation cover A over the wire as shown.
2. Remove about 1cm of insulation from the end of the wire B.
3. Push the end of the wire through the slot in the Lucar connector C. Bend the end of the wire D backwards and flat on to the connector.
4. Bend the lugs E at the rear of the connector around the insulation of the wire.
5. Use solder to connect the wire to the connector.
6. Let the connector cool, then push the insulation cover F over the connector.

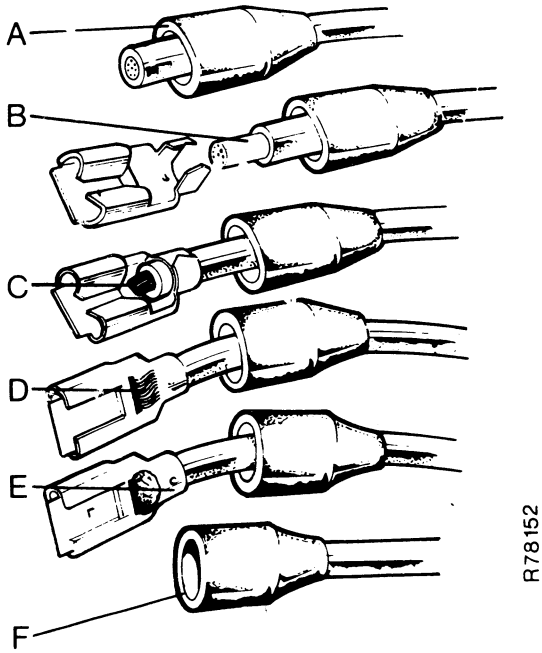

Figure H117
MAKING A CONNECTION USING SOLDER

LUCAR CONNECTORS

3/16" (·187") LUCAR MATERIAL: BRASS. FOR CRIMPING OR SOLDERING			
Connector Lucas Part No.	Approximate Rating	Application (Cable Size)	Insulating Cover P.V.C. Lucas Part No.
 54190972	6 amps	1–14/0·25mm (14/·010")	 54190680
 54954279		1–28/0·30mm (28/·012") 2–14/0·25mm (14/·010")	 54190953

1/4" (·250") LUCAR MATERIAL: BRASS. FOR CRIMPING OR SOLDERING			
Connector Lucas Part No.	Approximate Rating	Application (Cable Size)	Insulating Cover P.V.C. Lucas Part No.
 54960660	17½ amps	1–14/0·25mm (14/·010")	For details see below
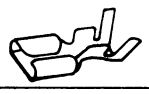 54960661		1–28/0·30mm (28/·012") 2–14/0·25mm (14/·010")	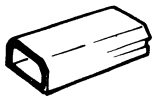 54959401

3/8" (·375") LUCAR MATERIAL: PHOSPHOR BRONZE. FOR SOLDERING			
Connector Lucas Part No.	Approximate Rating	Application (Cable Size)	Insulating Cover P.V.C. Lucas Part No.
 549420779	35 amps	1–28/0·30mm (28/·012") 1–44/0·30mm (44/·012") 1–65/0·30mm (65/·012")	 54190043

R78154

INSULATION COVER

Lucas Part Number 54959401.

This cover can be used on the complete range of ¼in straight Lucar connectors.

It can be used for wire sizes from 14/.025mm (14/.010in) to 44/0.30mm (44/.012in).

To install the cover, push it over the terminal until the locking lug goes into the location.

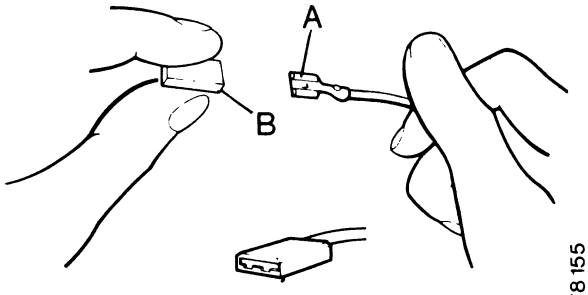

R78155

Figure H118
LUCAR CONNECTORS
A. Connector.
B. Cover.

BLADE TERMINALS AND INSULATORS

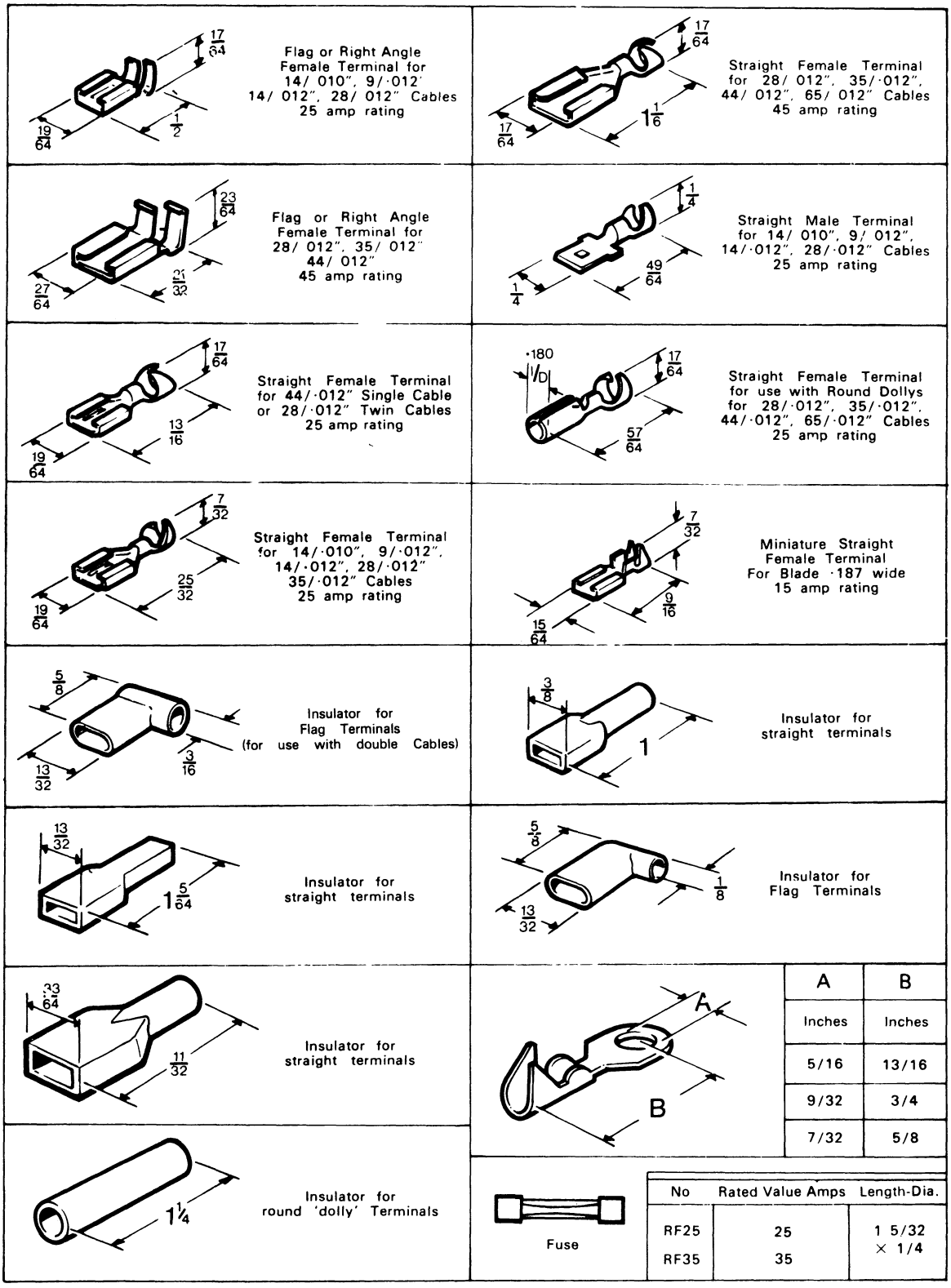

Figure H119
BLADE TERMINALS – BS SIZES

SNAP-IN CONNECTORS AND TERMINALS

	Description	Packets of	Lucas Part No.
	2-way snap-in (may be used with 9/32" single cable clip)	10	900288
	4-way. (Double)	1	850641
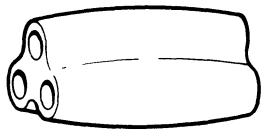	6-way. (Three 2-way)	1	850344
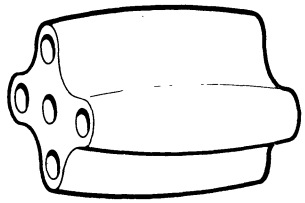	10-way. (Five 2-way)	1	850832

SNAP-IN (BULLET) TERMINAL ENDS

(For use with the above connectors)

		Description	Packets of	Lucas Part No.
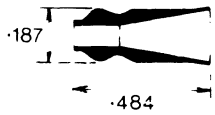		Solder type. For cable size 28/0·30mm (28/·012") P.T. and S.P.T.	10	900269
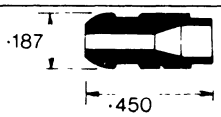		Hexagonal crimp type. For cable size 14/0·25mm (14/·010") P.T. and S.P.T.	10	54941384
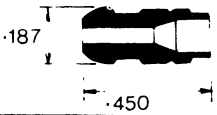		Hexagonal crimp type. For cable size 14/0·30mm (14/·012") P.T.	10	54944088
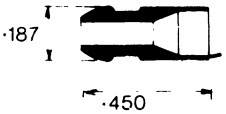		Hexagonal crimp type. For cable size 28/0·30mm (28/·012") P.T.	10	54944095
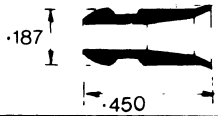		Hexagonal crimp type. For cable sizes 44/0·30mm (44/·012") or 65/0·30mm (65/·012") P.T.	10	54946098
		3/16" (0·188") diameter ferrule	10	188818

Figure H120
SNAP-IN CONNECTORS

HAZARD WARNING SWITCHES

Two different types of hazard warning switches were installed up to the following serial numbers.

885/633680	996/985304
990/862037	1210/727072
995/930639	1212/1003291

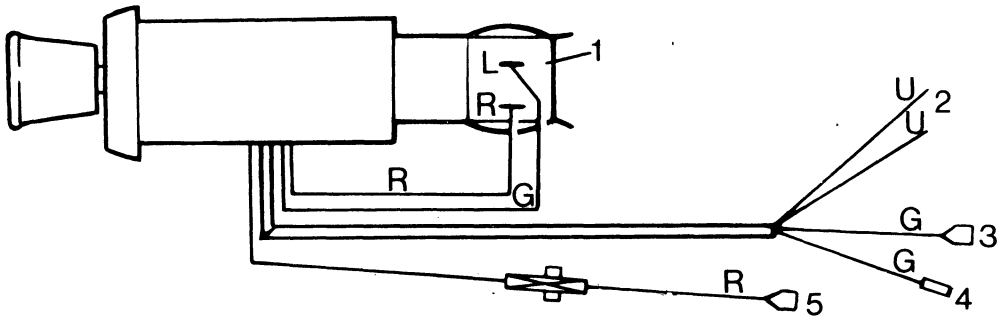

R78159

Figure H121
EARLY TYPE
Part Number K9446644

1. Hazard flasher unit.
2. Connections to L and R terminals of the direction indicator switch.
3. Connection to 49 + terminal of the direction flasher unit.
4. To green wire in the harness next to flasher unit.
5. Connection to terminal 1 of the starter switch.

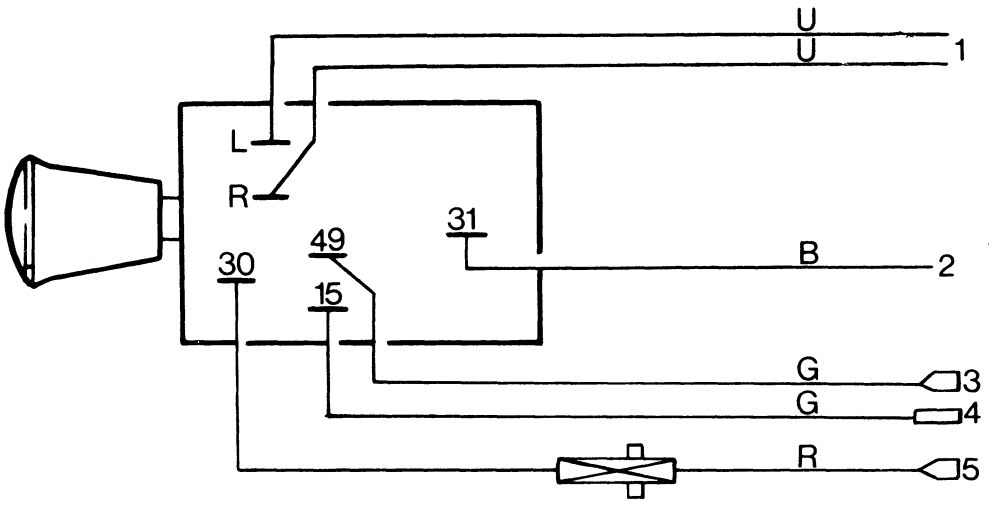

R78160

Figure H122
LATER TYPE
Part Number K950431

1. Connections to L and R terminals of the direction indicator switch.
2. Connection to ground.
3. Connection to 49 + terminal of direction flasher unit.
4. To green wire in the harness next to flasher unit.
5. To number 1 terminal of the starter switch.

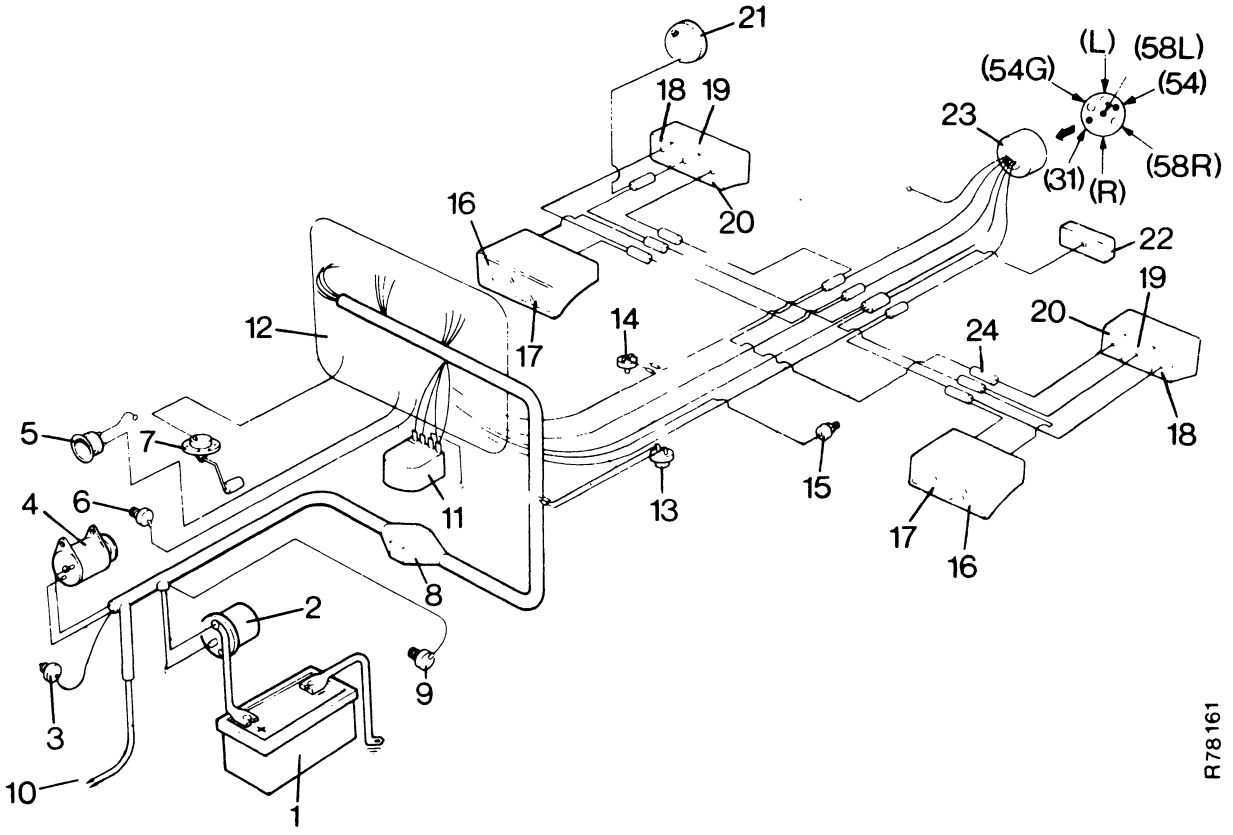

Figure H123
ARRANGEMENT OF WIRING
Tractors with full fenders, dynamo and early type wiring harness.

1. Battery.
2. Starter Solenoid.
3. Temperature sender unit.
4. Dynamo.
5. Horn.
6. Thermostart.
7. Fuel tank unit.
8. 10-way connector.
9. Oil pressure switch.
10. To headlamps.
11. Regulator.
12. Instrument panel.
13. Starter safety switch.
14. Stop lamp switch.
15. Hydraulic filter switch.
16. Side lamps.
17. Front direction indicators.
18. Rear direction indicators.
19. Rear lamps.
20. Stop lamps.
21. Flood lamp.
22. Number plate lamp.
23. Trailer socket.

TRAILER SOCKET
54G. Extra position.
58L. Left-hand, side and rear lamps.
58R. Right-hand, side and rear lamps.
54. Stop lamps.
31. Ground
R. Right hand indicators.
L. Left hand indicators.

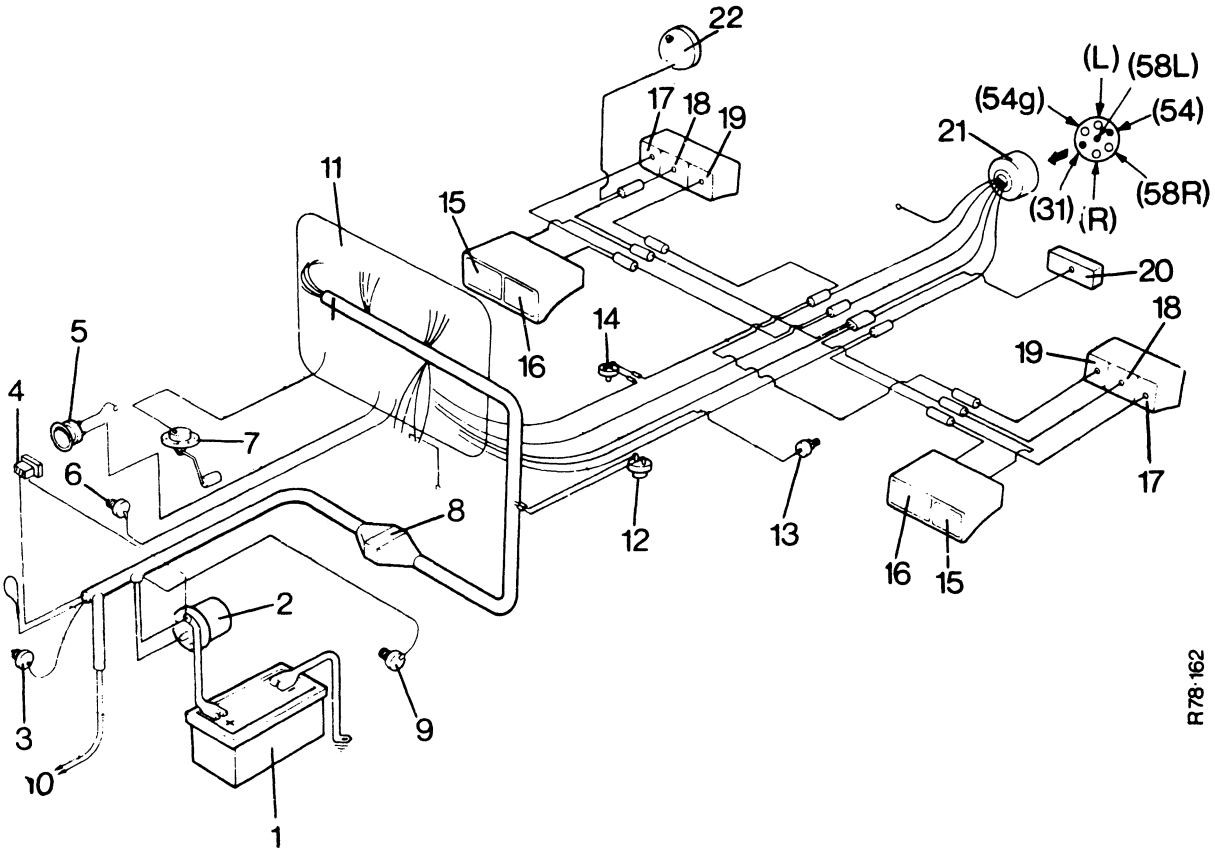

Figure H124
ARRANGEMENT OF WIRING
Tractors with full fenders, alternator and early type of wiring harness.

1. Battery.
2. Starter solenoid.
3. Temperature sender unit.
4. Alternator socket.
5. Horn.
6. Thermostart.
7. Fuel tank unit.
8. 10-way connector.
9. Oil pressure switch.
10. To headlamps.
11. Instrument panel.
12. Starter safety switch.
13. Hydraulic filter switch.
14. Stop lamp switch.
15. Side lamps.
16. Front direction indicators.
17. Rear direction indicators.
18. Rear lamps.
19. Stop lamps.
20. Number plate lamp.
21. Trailer socket.
22. Flood lamp.

TRAILER SOCKET

54g. Extra position.
58L. Left-hand, side and rear lamps.
58R. Right-hand, side and rear lamps.
54. Stop lamps.
31. Ground.
R. Right hand indicators.
L. Left hand indicators.

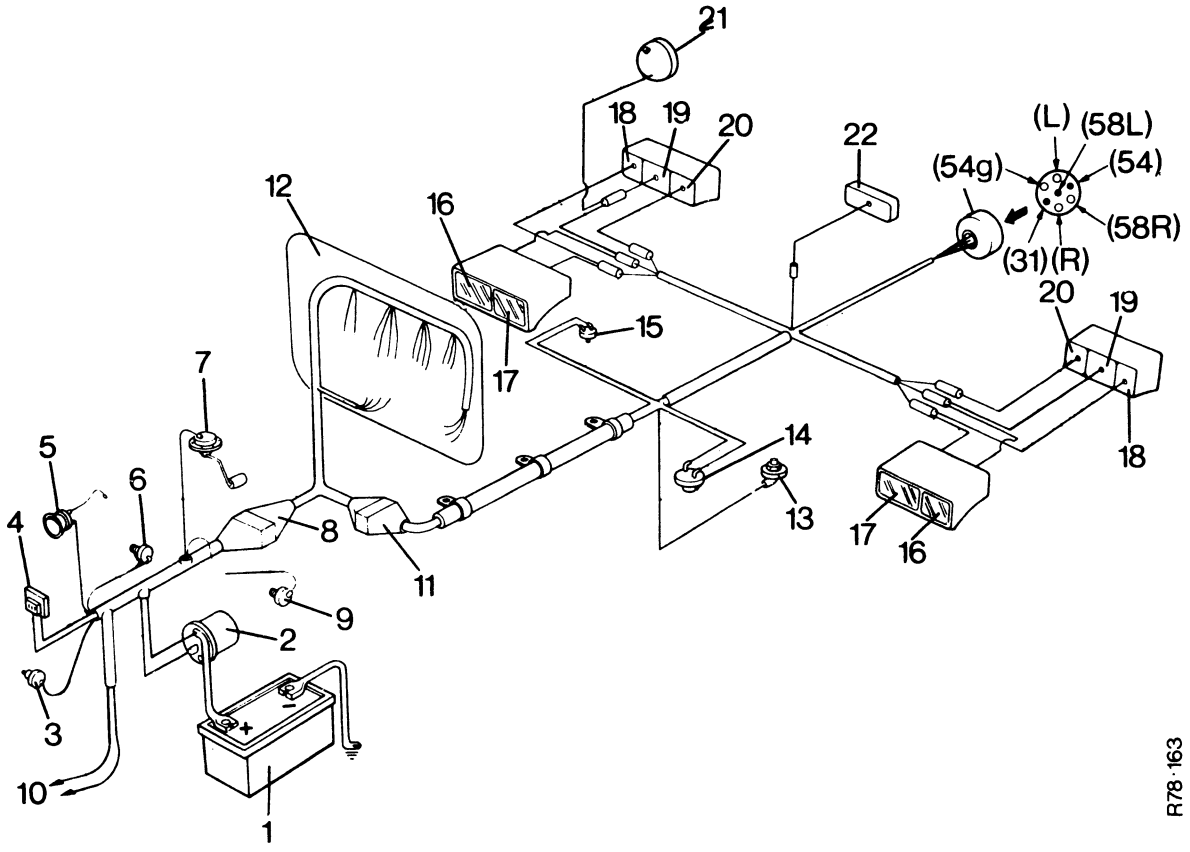

Figure H125
ARRANGEMENT OF WIRING
Tractors with full fenders, alternator and later type wiring harness.

1. Battery.
2. Starter solenoid.
3. Temperature sender unit.
4. Alternator socket.
5. Horn.
6. Thermostart.
7. Fuel tank unit.
8. 10-way connector.
9. Oil pressure switch.
10. To headlamps.
11. 7-way socket.
12. Instrument panel.
13. Hydraulic filter switch.
14. Starter safety switch.
15. Stop lamp switch.
16. Side lamps.
17. Front direction indicators.
18. Rear direction indicators.
19. Rear lamps.
20. Stop lamps.
21. Flood lamp.
22. Number plate lamp.
23. Trailer socket.

TRAILER SOCKET

54g. Extra position.
58L. Left-hand, side and rear lamps.
58R. Right-hand, side and rear lamps.
54. Stop lights.
31. Ground.
R. Right hand indicators.
L. Left hand indicators.

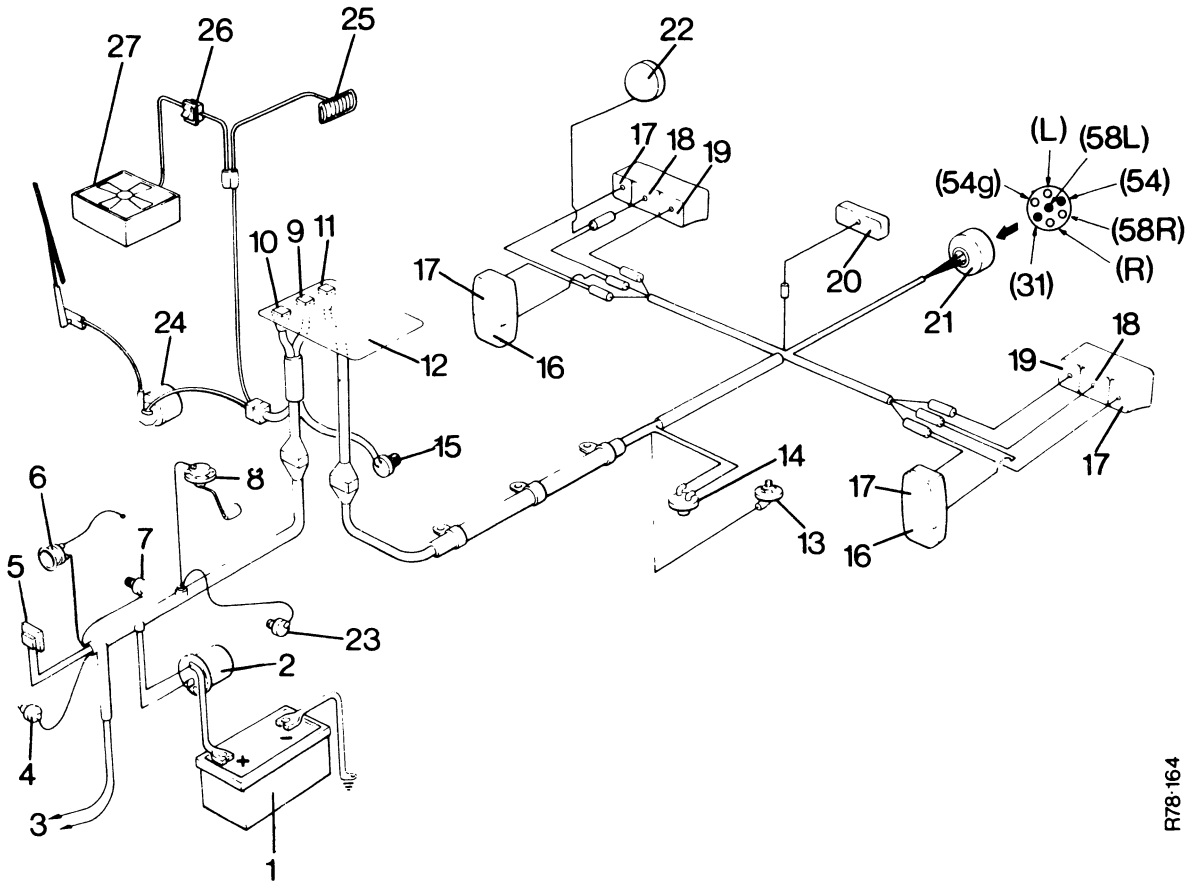

Figure H126
ARRANGEMENT OF WIRING
For tractors with Q-Cab.

1. Battery.
2. Starter solenoid.
3. To headlamps.
4. Temperature sender unit.
5. Alternator socket.
6. Horn.
7. Thermostart.
8. Fuel tank unit.
9. 11-way connector.
10. 2-way connector.
11. 7-way connector.
12. Instrument panel.
13. Hydraulic filter switch.
14. Starter safety switch.
15. Stop lamp switch.
16. Side lamps.
17. Direction indicators.
18. Rear lamps.
19. Stop lamps.
20. Number plate lamp.
21. Trailer socket.
22. Flood lamp.
23. Oil pressure switch.
24. Wiper motor.
25. Interior lamp.
26. Fan switch.
27. Heater unit.

TRAILER SOCKET

54g. Extra position.
58L. Left-hand, side and rear lamps.
58R. Right-hand, side and rear lamps.
54. Stop lamps.
31. Ground.
R. Right hand indicators.
L. Left hand indicators.

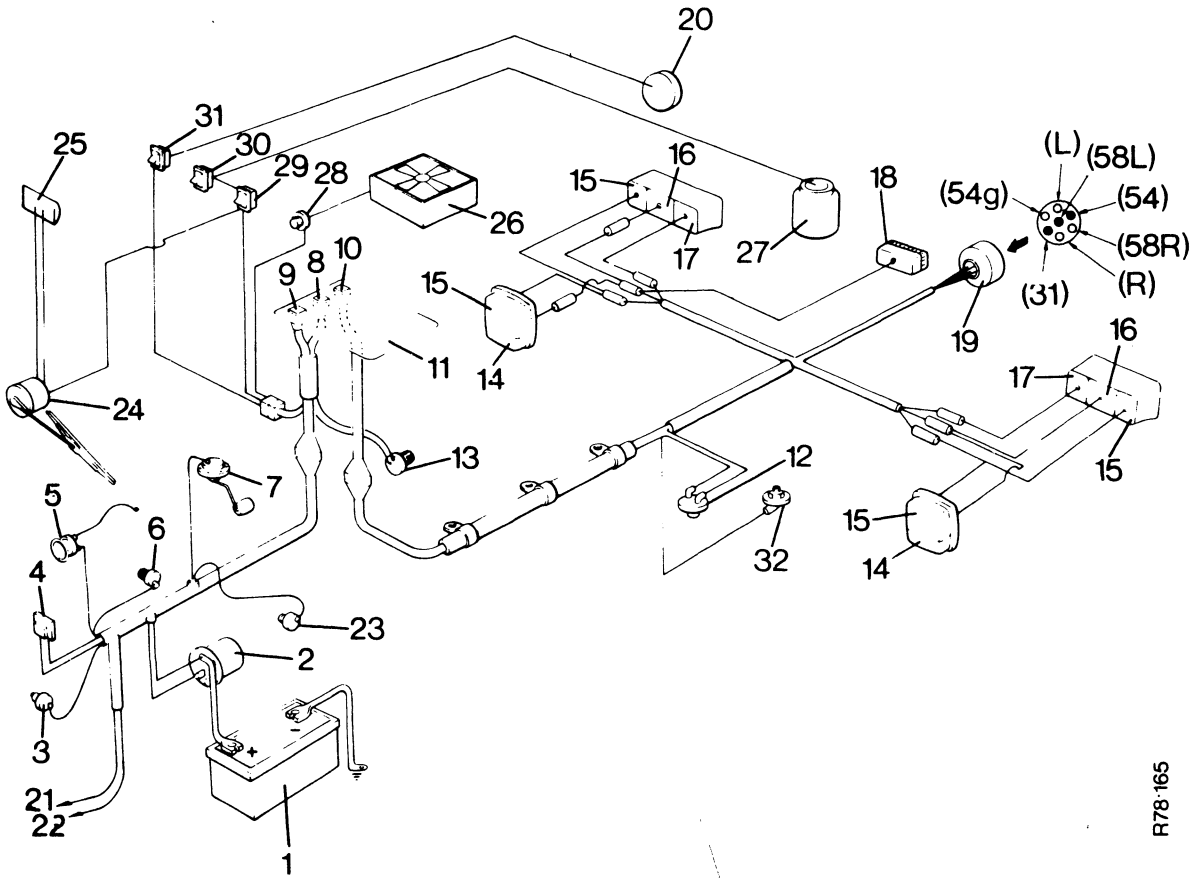

Figure H127
ARRANGEMENT OF WIRING
Tractors with de-luxe cab and Sekura cab.

1. Battery.
2. Starter solenoid.
3. Temperature sender.
4. Alternator socket.
5. Horn.
6. Thermostart.
7. Fuel tank unit.
8. 11-way connector.
9. 2-way connector.
10. 7-way connector.
11. Instrument panel.
12. Starter safety switch.
13. Stop lamp switch.
14. Side lamp.
15. Direction indicator lamp.
16. Rear lamp.
17. Stop lamp.
18. Number plate lamp.
19. 7-point trailer socket.
20. Rear flood lamp.
21. Dip beam.
22. Main beam.
23. Oil pressure switch.
24. Windshield wiper motor.
25. Cab interior lamp.
26. Fan unit.
27. Washer motor.
28. Fan switch.
29. Wiper switch.
30. Washer switch.
31. Floodlamp switch.
32. Hydraulic filter switch, installed on 8, 9 and 12 series tractors only.

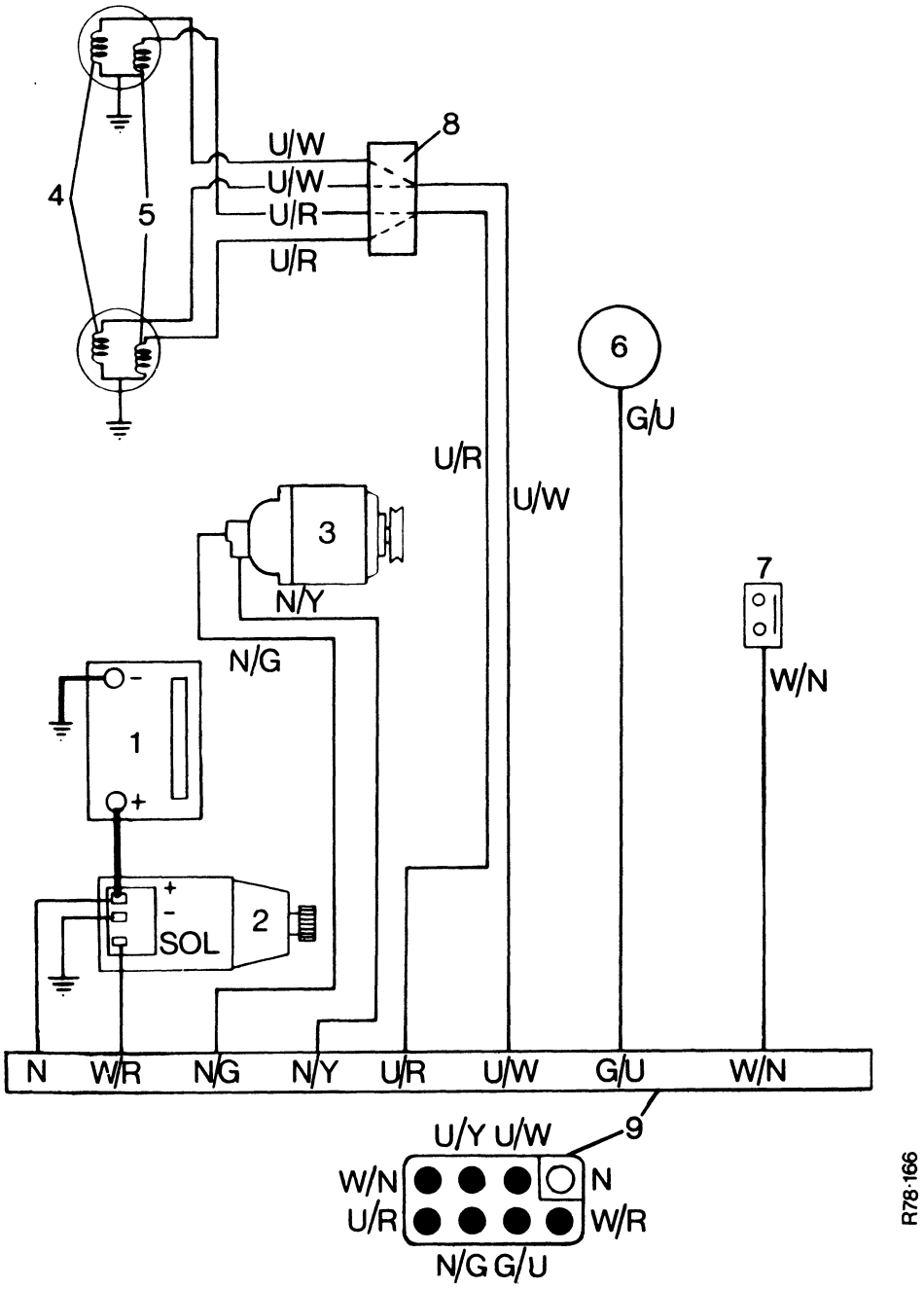

Figure H128
ENGINE HARNESS
For tractors with a dynamo, up to the following serial numbers:

885: 633680
990: 862037
995: 930639
996: 985304
1210: 727072
1212: 1003291

1. Battery.
2. Starter.
3. Dynamo.
4. Headlamp, main.
5. Headlamp, dip.
6. Temperature sender unit.
7. Oil pressure switch.
8. Headlamp connector, 4-way.
9. 8-way connector to instrument panel.

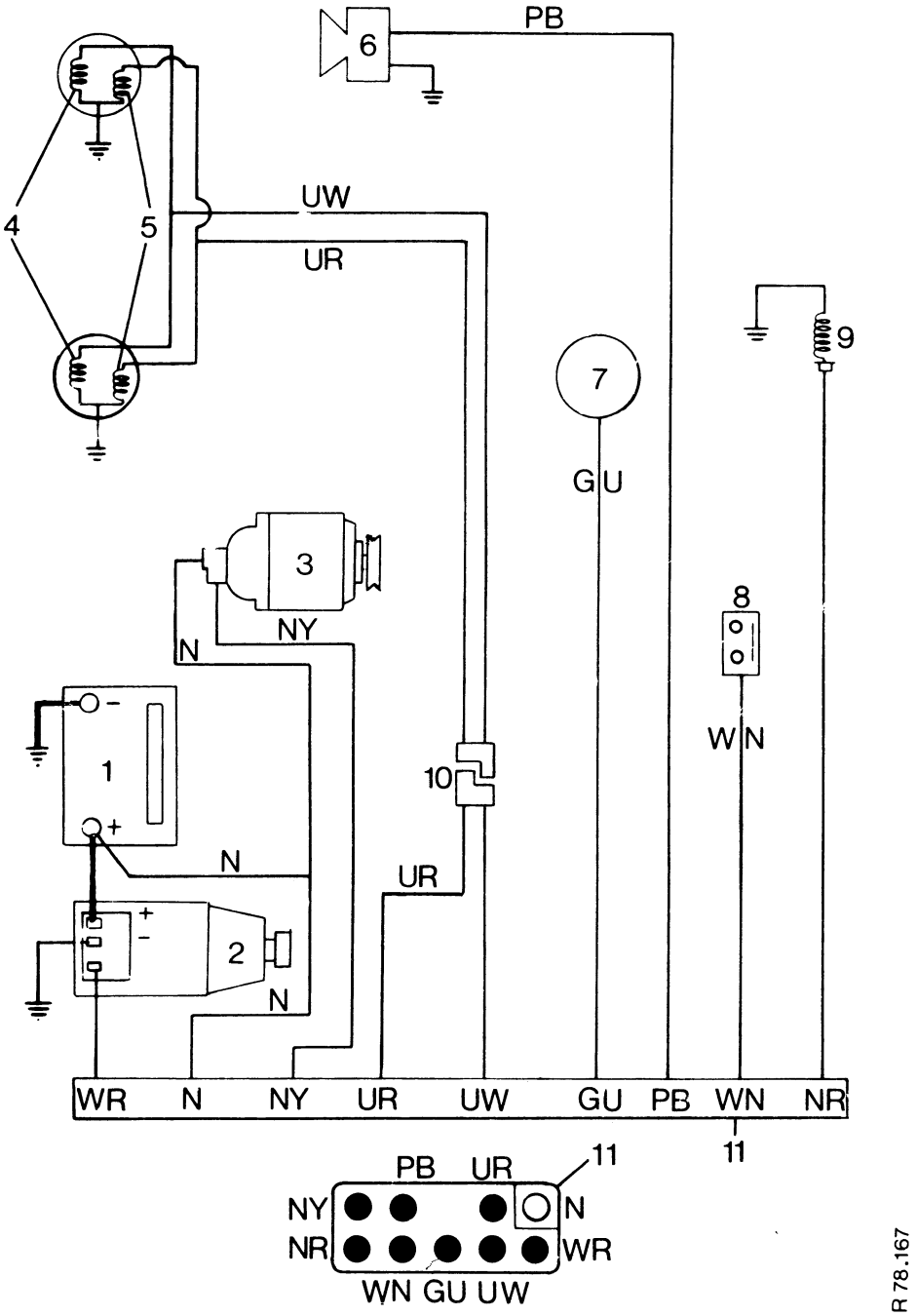

Figure H129
ENGINE HARNESS
For tractors with an alternator, from the following serial numbers:

885:629959	996:983735
885Q:11000001	996Q:11070001
990:558824	1210Q, 1212Q } 11150001
990Q:11070001	
995:927997	1410Q, 1412Q } 11200001
995Q:11070001	

1. Battery.
2. Starter.
3. Alternator.
4. Headlamp, main.
5. Headlamp, dip.
6. Horn.
7. Temperature sender unit.
8. Oil pressure switch.
9. Thermostart.
10. Headlamp connector, 2-way.
11. 9-way connector to instrument panel.

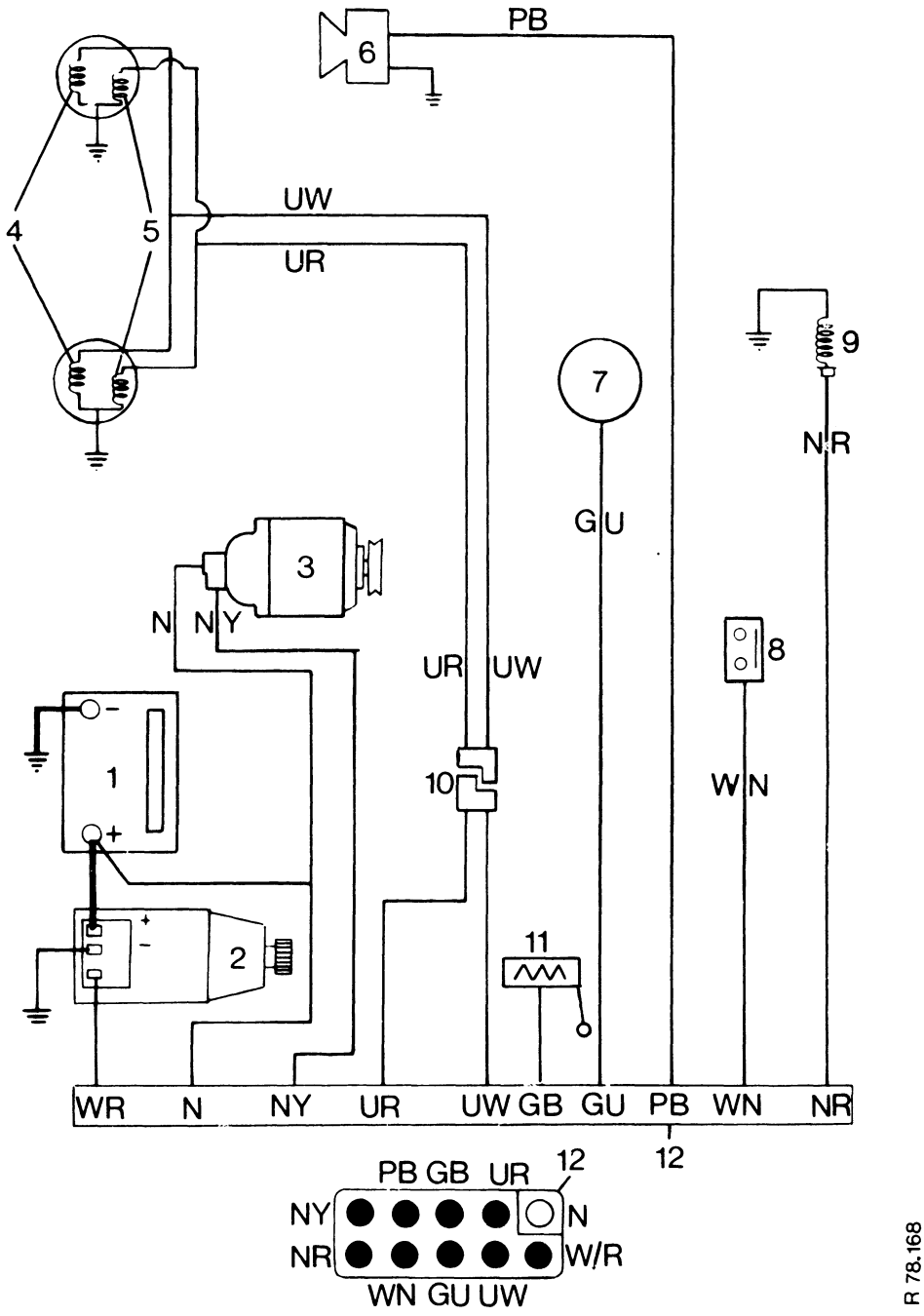

Figure H130
ENGINE HARNESS
For 12 and 14 series tractors without cab only, from the following serial numbers:

1210:727072
1212:1003291
1410
1412
1050001

1. Battery.
2. Starter.
3. Alternator.
4. Headlamp, main.
5. Headlamp, dip.
6. Horn.
7. Temperature sender unit.
8. Oil pressure switch.
9. Thermostart.
10. Headlamp connector, 2-way.
11. Fuel tank unit.
12. 10-way connector to instrument panel.

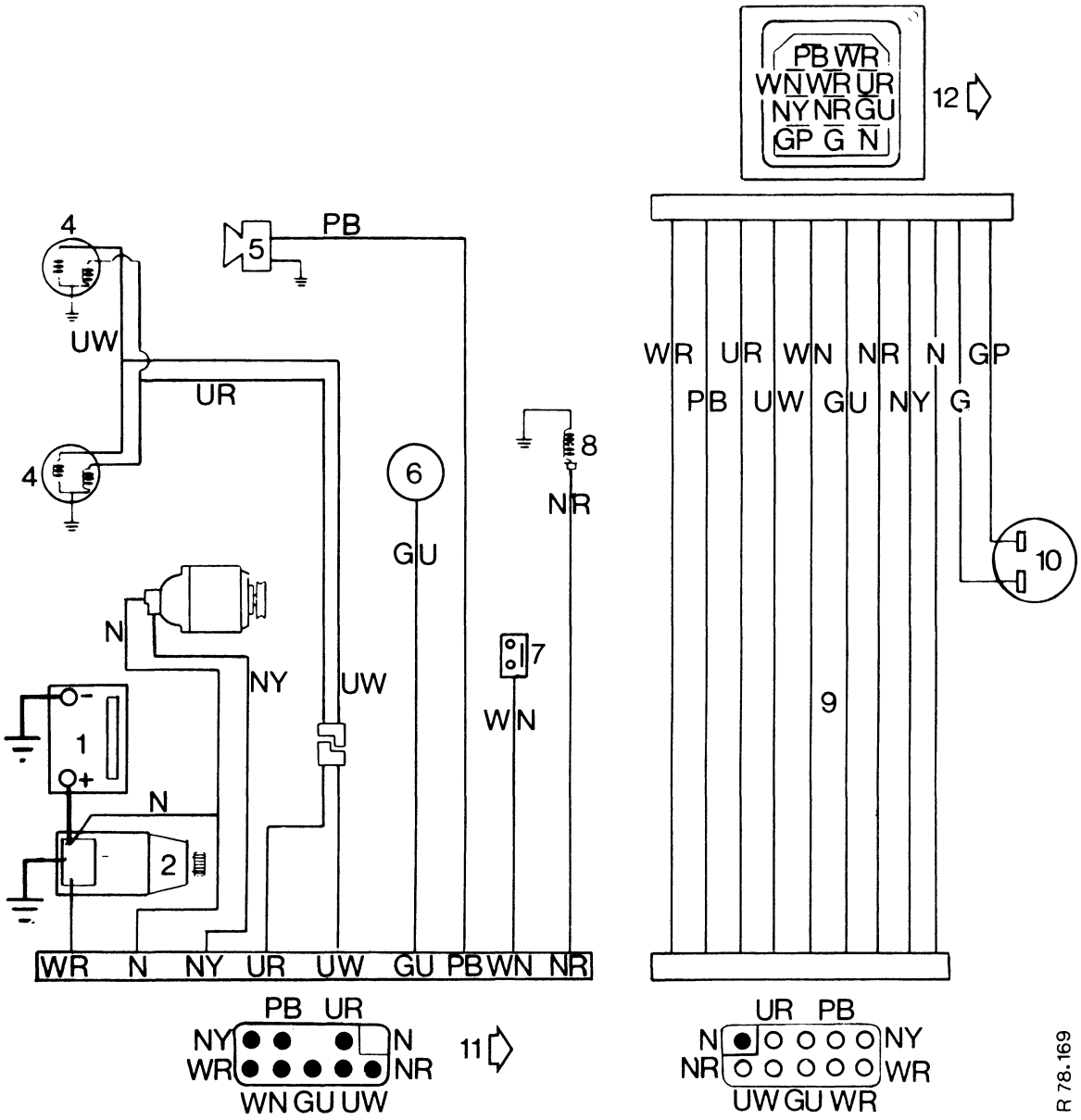

Figure H131
ENGINE HARNESS
For tractors with Q-cab, de-luxe cab, and Sekura cab, from the following serial numbers:

885: 11000001
990, 995, 996 } 1107001
1210, 1212 } 11150001
1410, 1412 } 11200001

1. Battery.
2. Starter.
3. Alternator.
4. Headlamp.
5. Horn.
6. Temperature sender unit.
7. Oil pressure switch.
8. Thermostart.
9. Console harness.
10. Stop lamp switch.
11. 9-way connector, to console harness.
12. 11-way connector, to instrument panel.

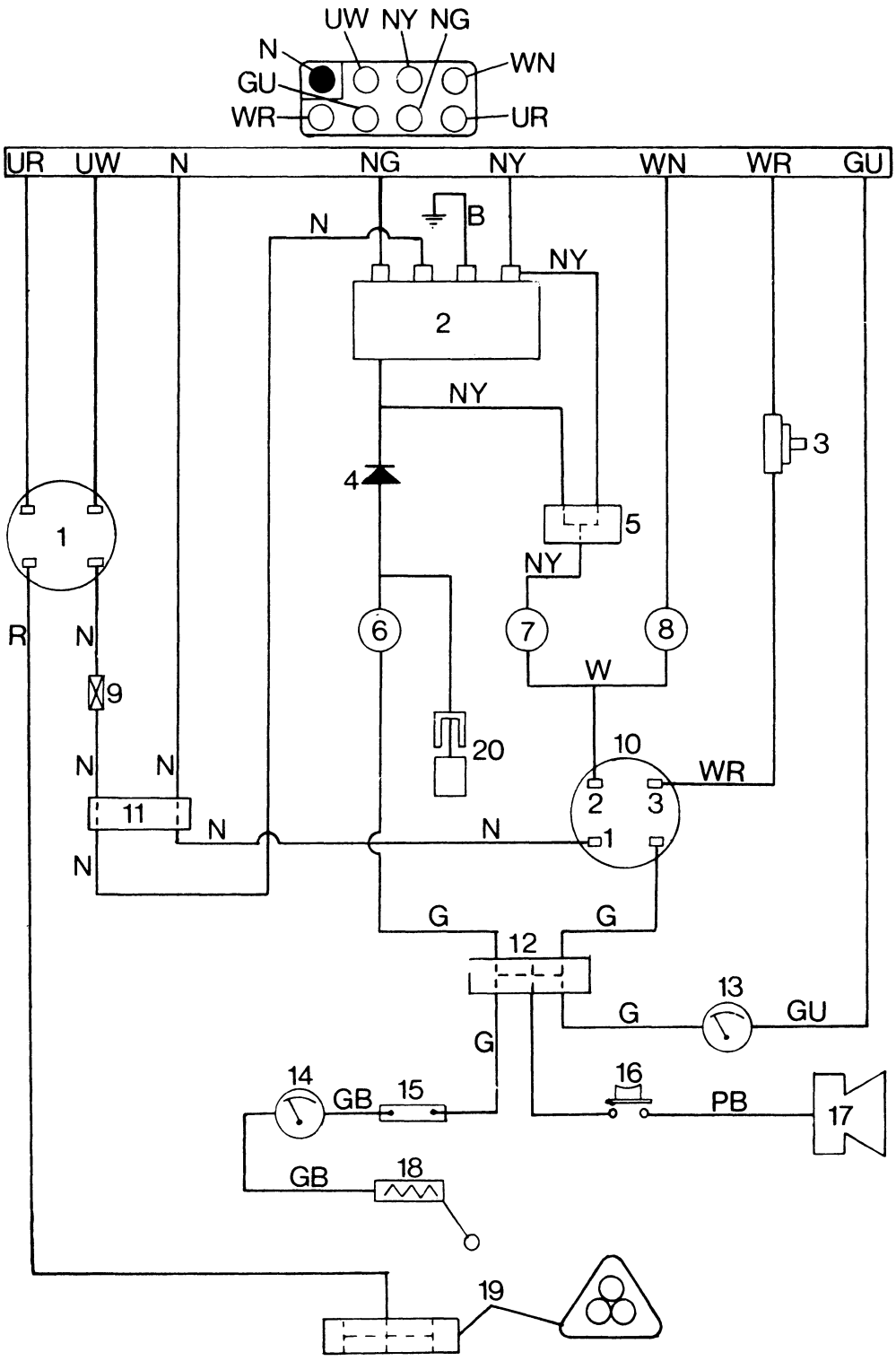

Figure H132
INSTRUMENT PANEL HARNESS

For tractors with shell fenders, up to the following serial numbers:

885:633680
990:860237
995:930639
996:985304
1210:727072
1212:1003291

1. Lighting switch.
2. Regulator.
3. Starter safety switch.
4. Diode.
5. Double connector.
6. Hydraulic filter lamp, yellow.
7. Charge warning lamp, red.
8. Oil pressure warning lamp, green.
9. Fuse.
10. Starter/Isolating switch.
11. Double connector.
12. Connector 3-way.
13. Temperature gauge.
14. Fuel gauge.
15. Voltage stabiliser, 885 only.
16. Horn button.
17. Horn.
18. Fuel tank unit.
19. Connector 3-way to rear harness.
20. Hydraulic filter switch.

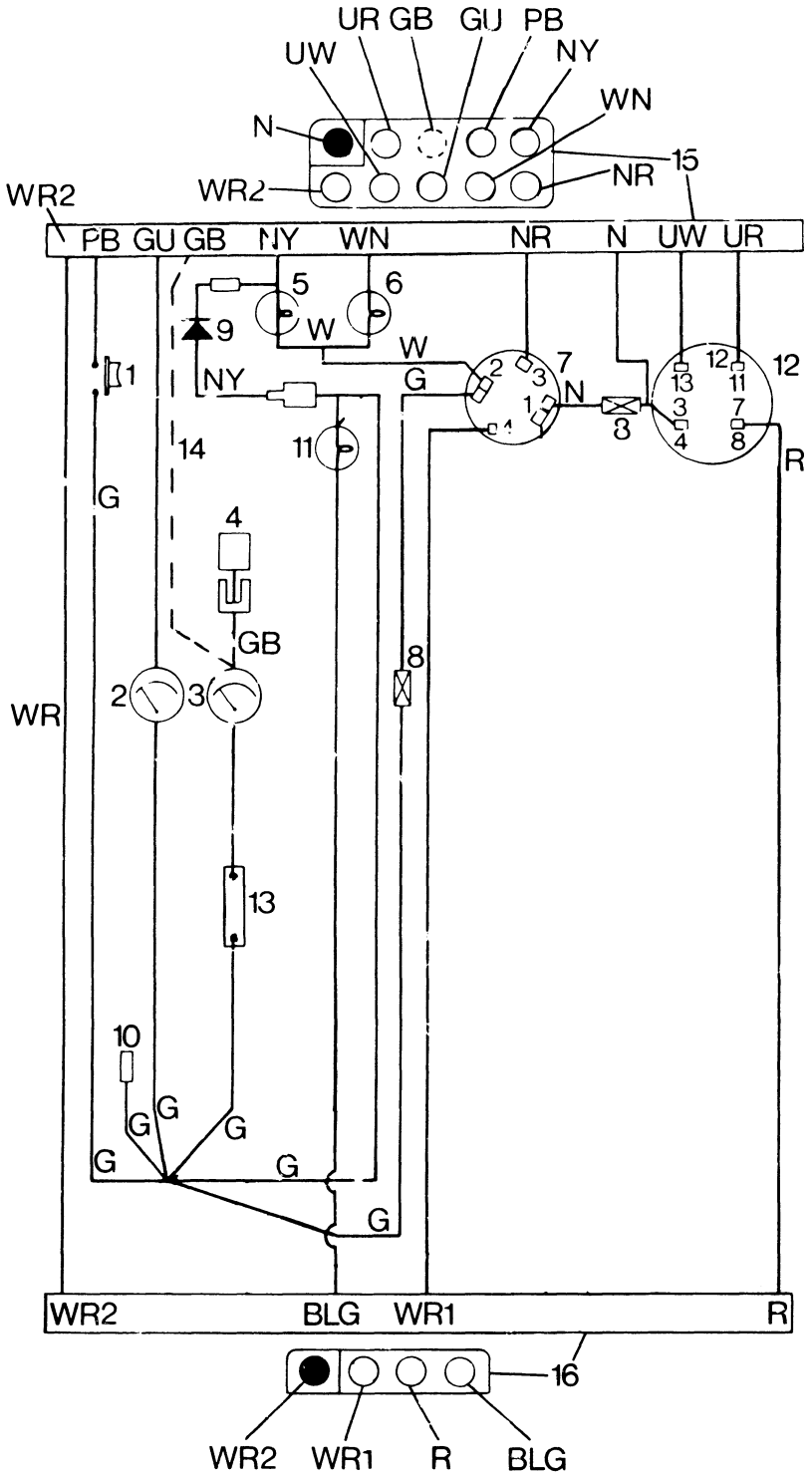

Figure H133
INSTRUMENT PANEL HARNESS
For tractors with shell fenders, from the following serial numbers:

885:633680
990:862037
995:930639
996:985304
1210:727072
1212:1003291

1. Horn button.
2. Temperature gauge.
3. Fuel gauge.
4. Fuel tank unit.
5. Charge warning lamp, red.
6. Oil pressure warning lamp, green.
7. Isolating/Starter switch.
8. Fuses.
9. Diode.
10. Connection for extra equipment.
11. Hydraulic filter lamp, yellow.
12. Lighting switch.
13. Voltage stabiliser, 885 only.
14. Connection to fuel tank unit in engine harness, 12 series tractor.
15. 10-way connector, to engine harness.
16. 4-way connector to rear harness.

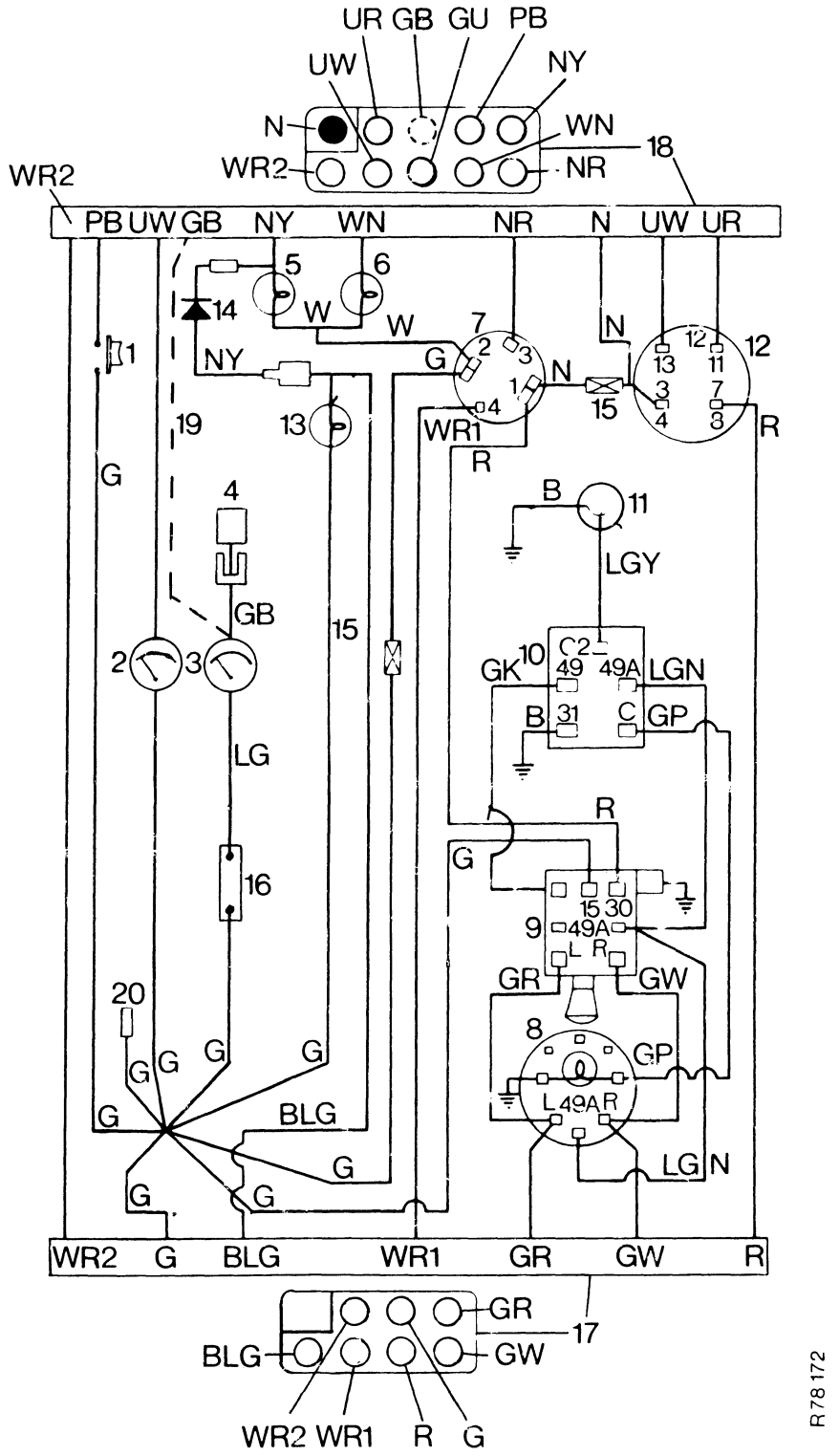

Figure H134
INSTRUMENT PANEL HARNESS
For tractors with full fenders, from the following serial numbers:

885:633680	1210:727072
990:862037	1212:1003291
995:930639	1410 } 1050001
996:985304	1412 }

1. Horn button.
2. Temperature gauge.
3. Fuel gauge.
4. Fuel tank sender unit.
5. Charge warning lamp, red
6. Oil pressure warning lamp, green.
7. Isolating/Starter switch.
8. Direction indicator switch.
9. Hazard warning switch.
10. Flasher unit.
11. Warning lamp, trailer direction indicators.
12. Lighting switch.
13. Hydraulic filter warning lamp, yellow.
14. Diode.
15. Fuses.
16. Voltage stabiliser, 885 only.
17. 7-way connector, to rear harness.
18. 9-way connector, to engine harness.
19. Connection to fuel tank unit, 12 and 14 series only.
20. Connection for extra equipment.

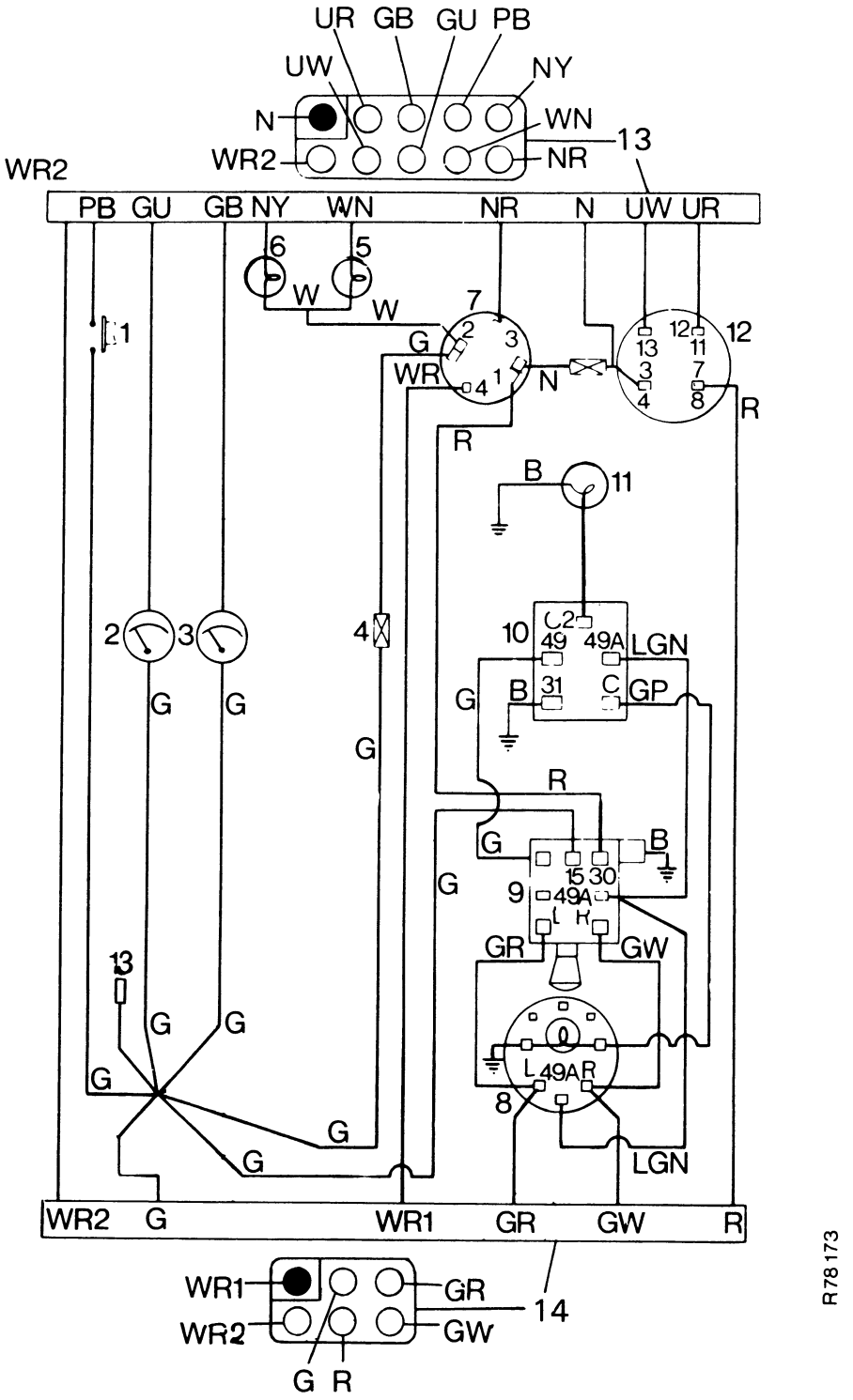

Figure H135
INSTRUMENT PANEL HARNESS

For 12 and 14 series tractors, with full fenders, from the following serial numbers:

1210, 1212 } 11152567

1410, 1412 11200752

1. Horn button.
2. Temperature gauge.
3. Fuel contents gauge.
4. Fuses.
5. Charge warning lamp, red.
6. Oil pressure warning lamp, green.
7. Isolating/starter switch.
8. Direction indicator switch.
9. Hazard warning switch.
10. Flasher unit.
11. Warning lamp, trailer direction indicators.
12. Lighting switch.
13. 10-way connector, to engine harness.
14. 6-way connector, to rear harness.

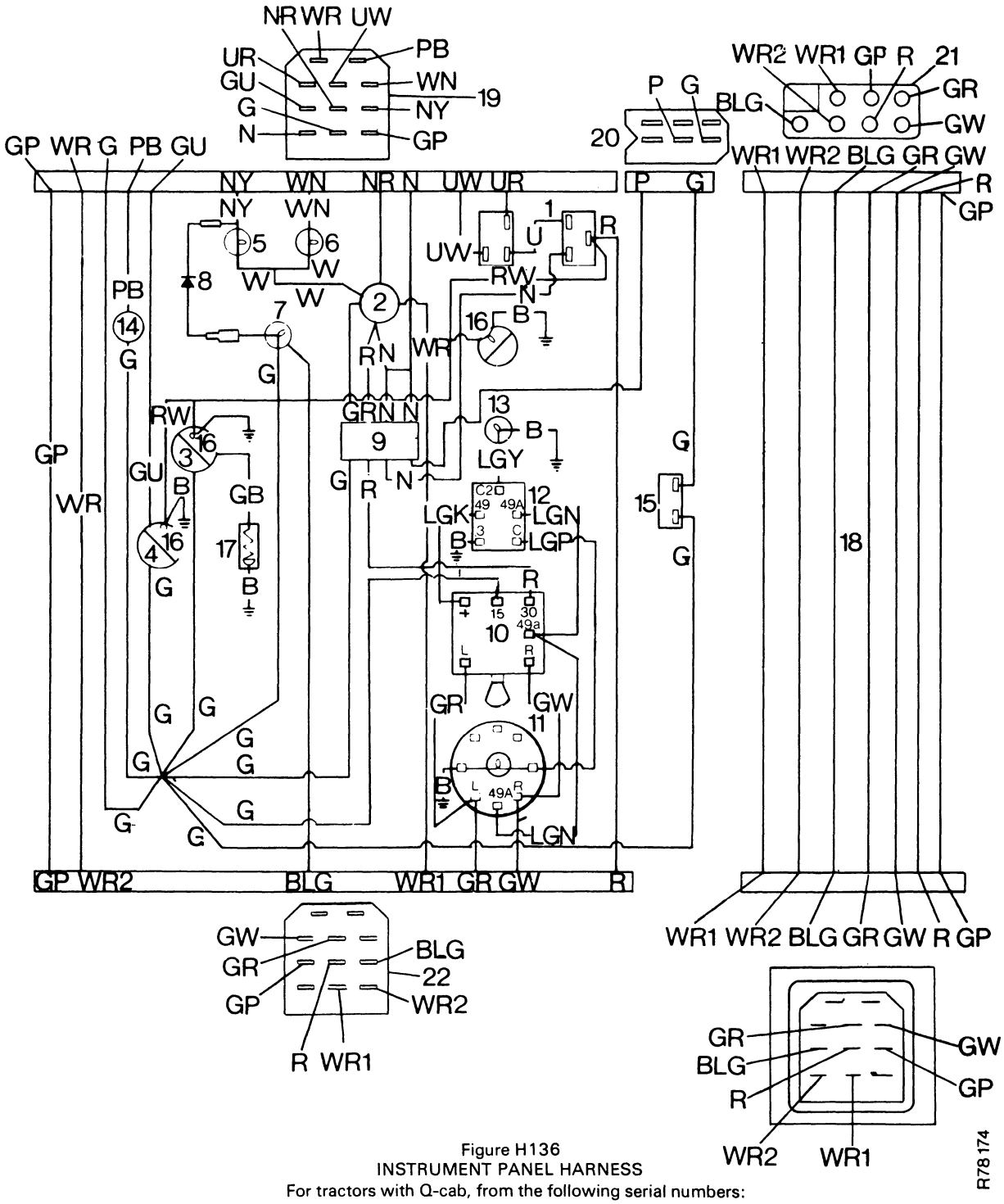

Figure H136
INSTRUMENT PANEL HARNESS
For tractors with Q-cab, from the following serial numbers:

Without console harness:

885Q:	11000001
990Q, 995Q, 996Q	11070001
1210Q, 121Q, 1410Q, 1412Q	11150001
	11200001

With console harness:

885Q:	11006680
990Q, 995Q, 996Q	11083020
1210Q, 1212Q, 1410Q, 1412Q	11156513
	11202423

1. Lighting switches.
2. Isolating/starter switch.
3. Fuel gauge.
4. Temperature gauge.
5. Charge warning lamp, red.
6. Oil pressure warning lamp, green.
7. Hydraulic filter lamp, yellow.
8. Diode.
9. Fuses.
10. Hazard warning switch.
11. Direction indicator switch.
12. Flasher unit.
13. Warning lamp, trailer direction indicators.
14. Horn button.
15. Wiper switch.
16. Panel lamps.
17. Fuel tank unit.
18. Console harness, not on early tractors with cab.
19. 11-way connector, to engine console harness.
20. 2-way connector, to cab harness.
21. 7-way connector, to rear harness.
22. 7-way connector, to console harness.

NOTE: Items 7 and 8 are not installed on 12 series from 11152617 and 14 series from 11200752.

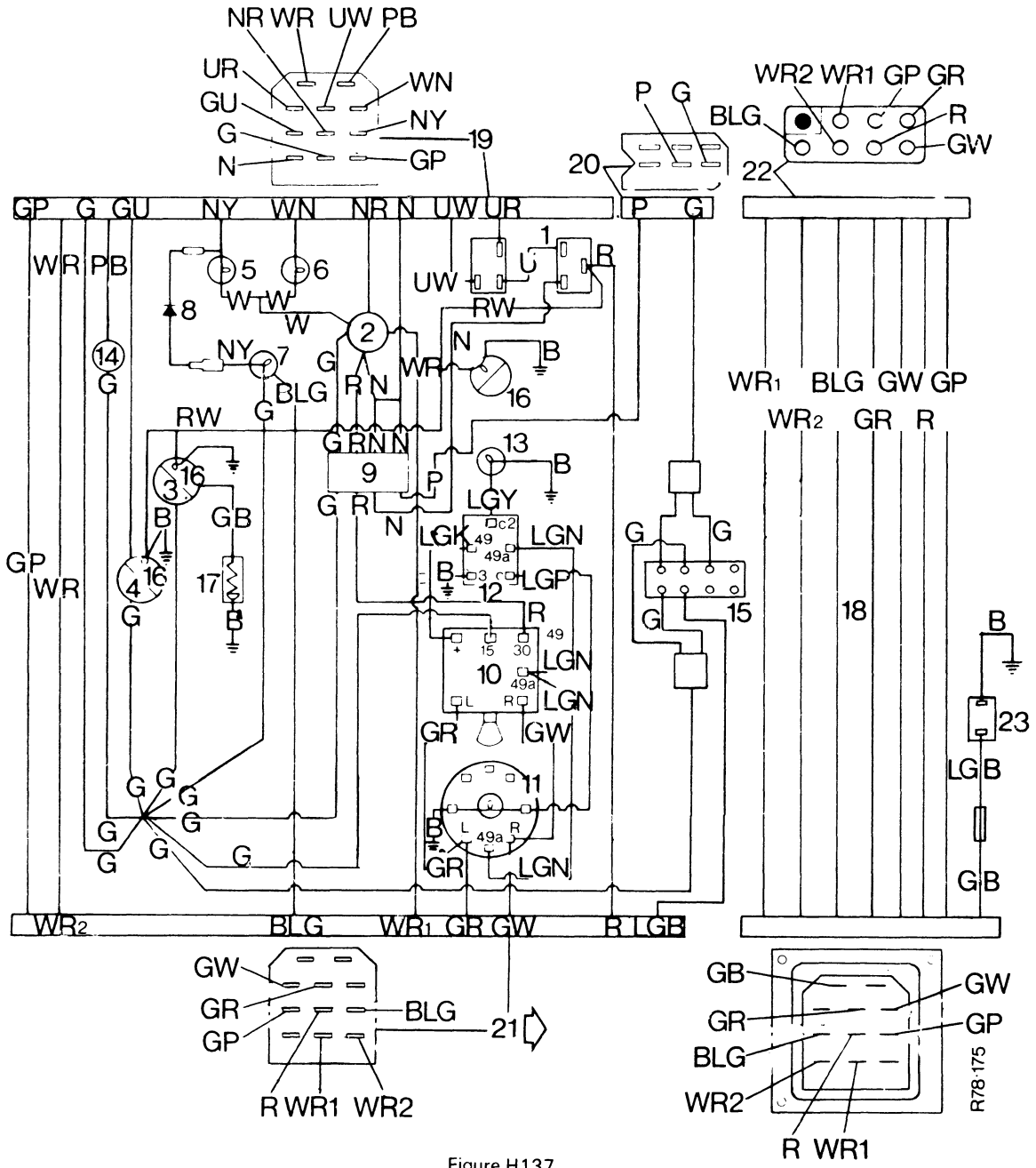

Figure H137
INSTRUMENT PANEL HARNESS

For tractors with Q-cab from the following serial numbers:

885Q: 11010300
990, 995, 996 } 11088300
1210, 1212 } 111558600
1410, 1412 } 11203600

1. Lighting switches.
2. Isolating/starter switch.
3. Fuel gauge.
4. Temperature gauge.
5. Charge warning lamp, red.
6. Oil pressure warning lamp, green.
7. Hydraulic filter lamp, yellow.
8. Diode.
9. Fuses.
10. Hazard warning switch.
11. Direction indicator switch.
12. Flasher unit.
13. Warning lamp, trailer direction indicators.
14. Horn button.
15. Wiper/Washer switch.
16. Panel lamps.
17. Fuel tank unit.
18. Console harness.
19. 11-way connector, to engine console harness.
20. 2-way connector, to cab harness.
21. 7-way connector, to console harness.
22. 7-way connector, to rear harness.
23. Windshield washer motor.

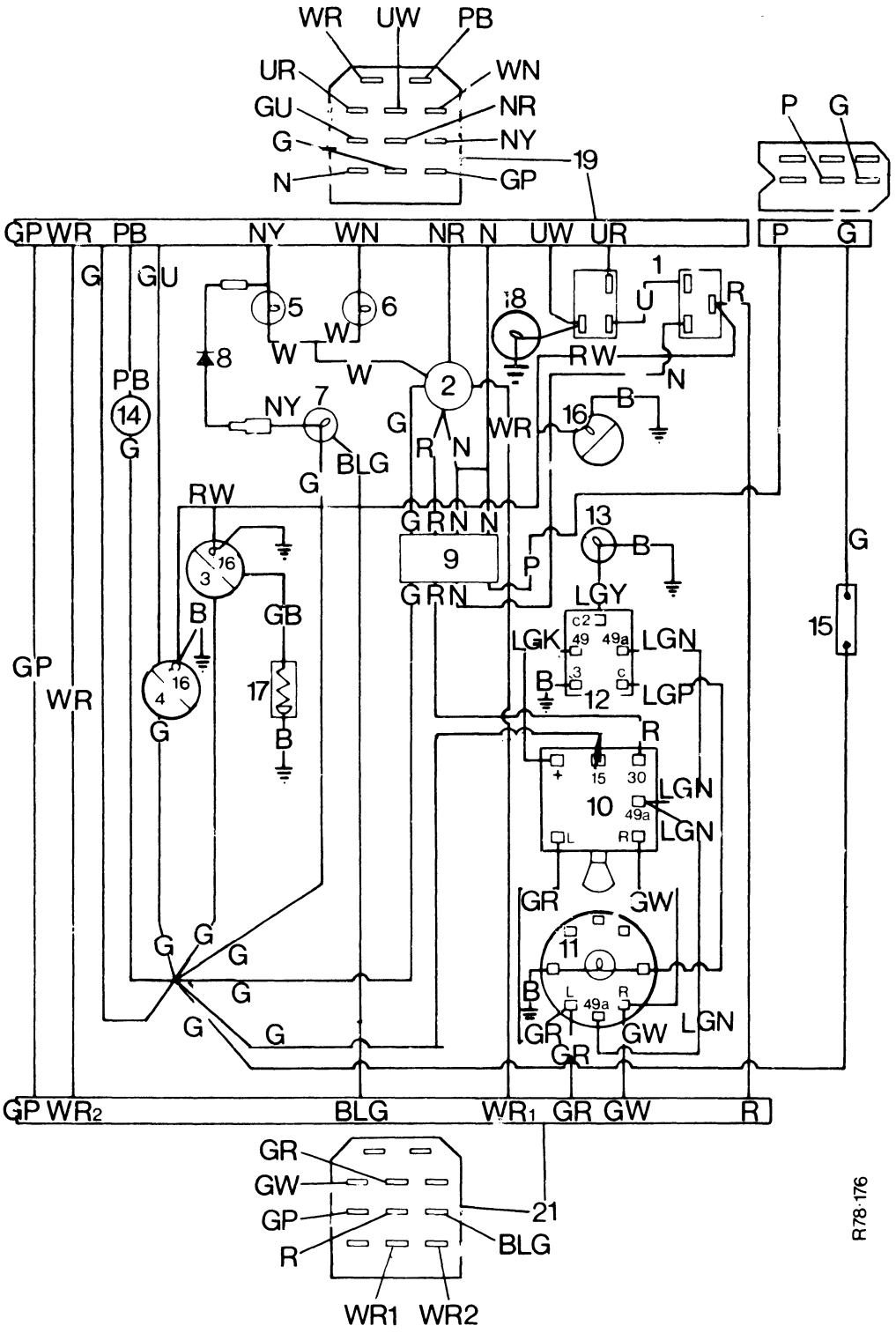

Figure H138
INSTRUMENT PANEL HARNESS
For tractors with a de-luxe cab and Sekura cab, from the following serial numbers:

885: 11010509
990
995 } 11088651
996

1210
1212 } 11158982

1410
1412 } 11203600

1. Lighting switches.
2. Isolating/Starter switch.
3. Fuel gauge.
4. Temperature gauge.
5. Charge warning lamp, red.
6. Oil pressure warning lamp, green.
7. Hydraulic filter lamp, yellow.
8. Diode.
9. Fuses.
10. Hazard warning switch.
11. Direction indicator switch.
12. Flasher unit.
13. Warning lamp, trailer direction indicators.
14. Horn button.
15. Single connector.
16. Panel lamps.
17. Fuel tank unit.
18. Main headlamp warning, blue.
19. 11-way connector, to engine console harness.
20. 2-way connector, to cab harness.
21. 7-way connector, to rear harness.

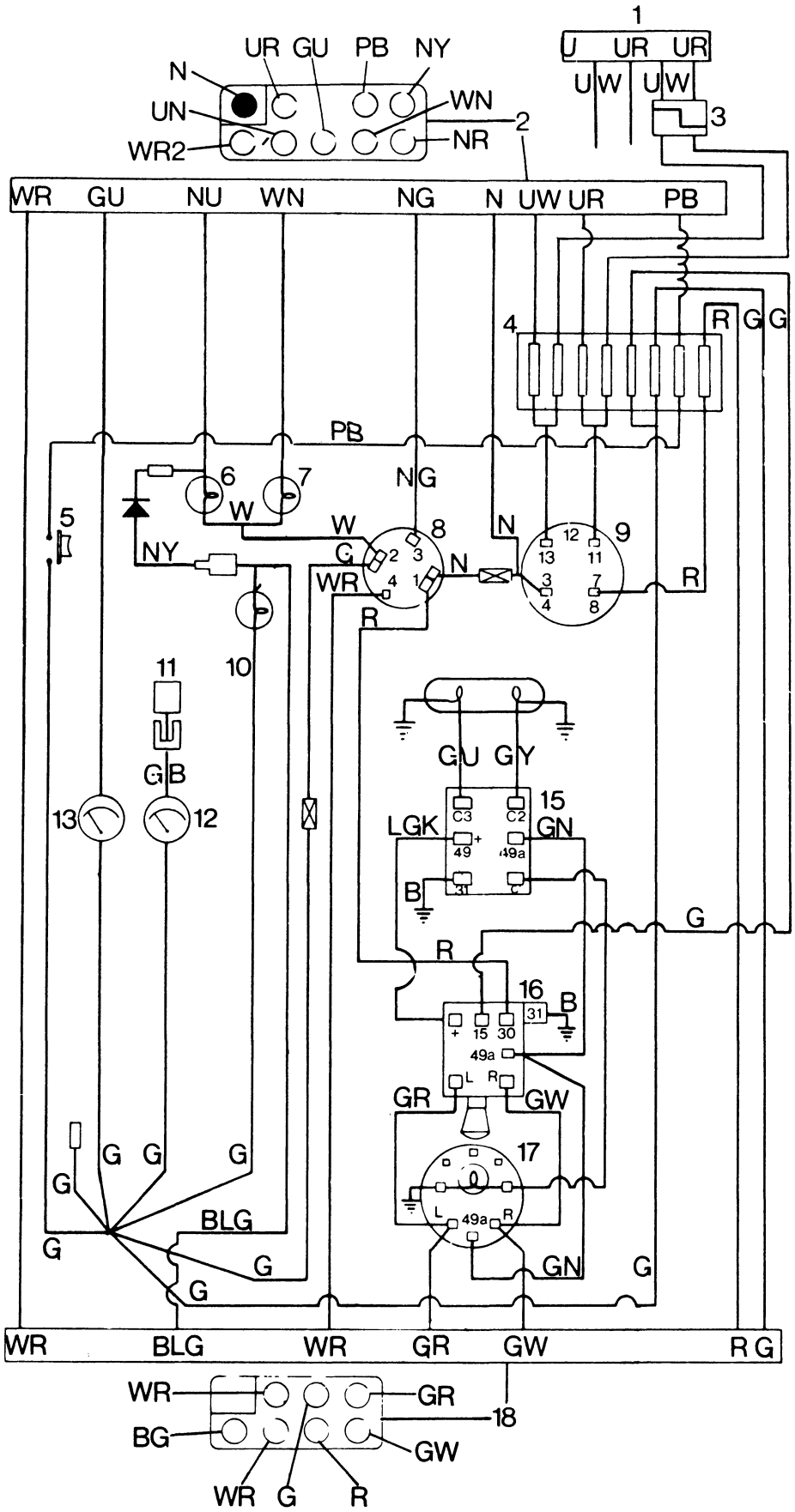
1
U UR UR
UW UW
3
UR GU PB NY
N
UN
WR2
WN
NR
2
WR GU NU WN NG N UW UR PB
4
R G G
PB
6
7
NG
W
5
NY
W
G
WR
8
N
9
R
R
10
11
GB
13
12
GU GY
15
C3 C2
LGK
GN
49 49a
31
B
G
R
16
31
B
15 30
49a
L R
GR
GW
17
L 49a R
G G G
G
BLG
G
G
G
GN
G
WR BLG WR GR GW R G
WR
GR
18
BG
GW
WR G R
R78-177

Figure H139
INSTRUMENT PANEL HARNESS
For tractor without cab, Germany.

1. 4-way connector to headlamps.
2. 9-way connector to engine harness.
3. 2-way connector to headlamps.
4. Fuse box, 8 fuses.
5. Horn button.
6. Temperature gauge.
7. Fuel gauge.
8. Fuel tank unit.
9. Charge warning lamp, red.
10. Oil pressure warning lamp, green.
11. Isolation/Starter switch.
12. Direction indicators switch.
13. Hazard warning switch.
14. Flasher unit.
15. Warning lamp, trailer direction indicators.
16. Light switch.
17. Hydraulic filter warning, yellow.
18. 7-way connector to rear harness.

Figure H140
INSTRUMENT PANEL HARNESS
For tractors for Germany with de-luxe cab (Sekura), from the following serial numbers:

990, 995, 996 } 11087366

1210, 1212 } 11158779

1410, 1412 } 11203833

1. Lighting switches.
2. Isolating/Starter switch.
3. Fuel gauge.
4. Temperature gauge.
5. Charge warning lamp, red.
6. Oil pressure warning lamp, green.
7. Hydraulic filter lamp, yellow.
8. Diode.
9. Fuses.
10. Hazard warning switch.
11. Direction indicator switch.
12. Flasher unit.
13. Warning lamps, trailer direction indicators.
14. Horn button.
15. Single connector.
16. Panel.
17. Fuel tank unit.
18. Main headlamp warning, blue.
19. 11-way connector to engine harness.
20. Connection to console harness.
21. Connection to cab harness.
22. 7-way connector to rear harness.

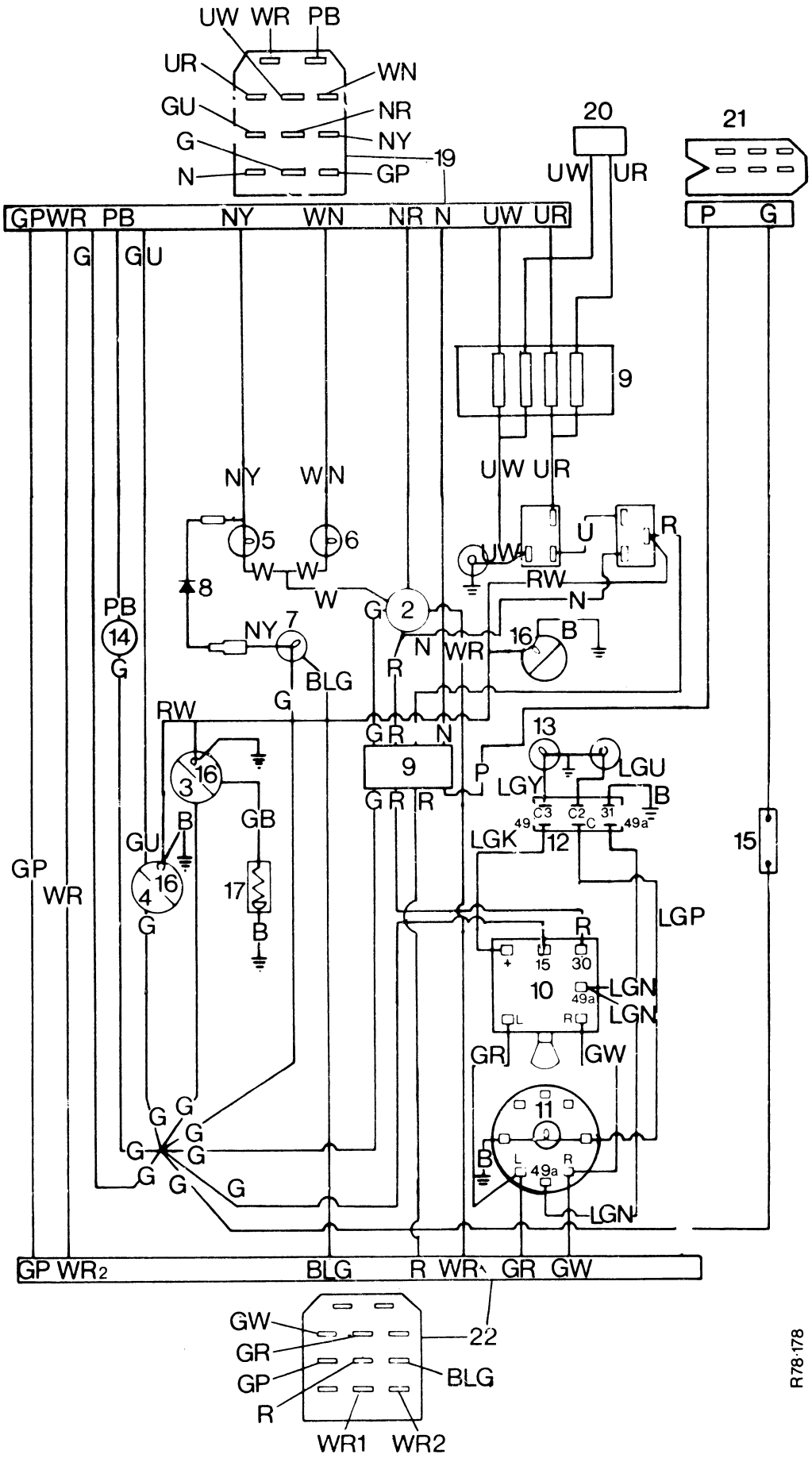
UW WR PB
UR
WN
GU
NR
G
NY
N
GP
19
20
21
UW UR
GPWR PB NY WN NR N UW UR
P G
G GU
9
NY WN
UW UR
5
6
U
R
UW
W W
RW
8
W
N
PB
14
G
NY 7
G 2
N WR
16 B
R
BLG
G
RW
G R N
13
16
3
9
P
LGU
LGY
B
G R R
C3 C2 31
49 C 49a
GB
B
GU
LGK
12
15
GP
WR
16
4
17
G
B
LGP
R
+ 15 30
10
49a
LGN
LGN
L R
GR
GW
G G
G G
G G
G G
11
B
L R
49a
LGN
GP WR2 BLG R WR GR GW
GW
22
GR
GP
BLG
R
WR1 WR2
R78·178

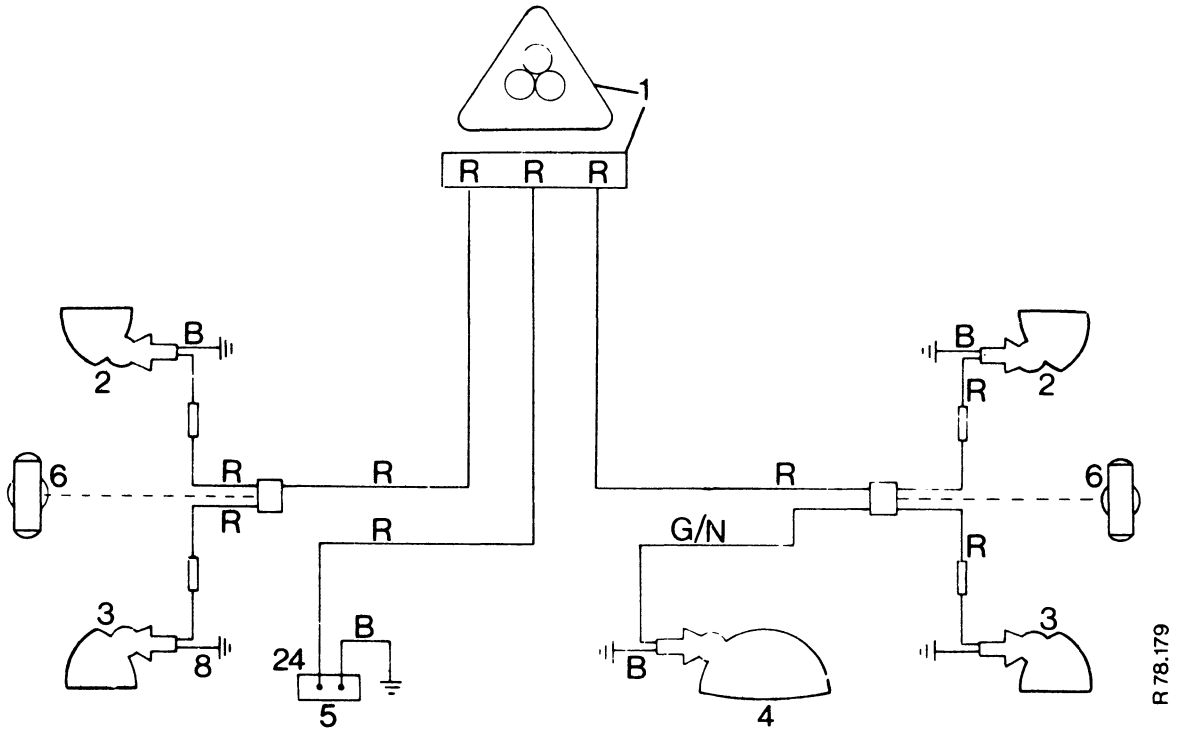

Figure H141
REAR HARNESS

For tractors with shell fenders up to the following serial numbers:

885:633680	996:985304
990:862037	1210:727072
995:930639	1212:1003291

1. 3-way connector.
2. Side lamps.
3. Rear lamps.
4. Flood lamp.
5. Number plate lamp.
6. Single side/rear lamp as installed on some tractor models.

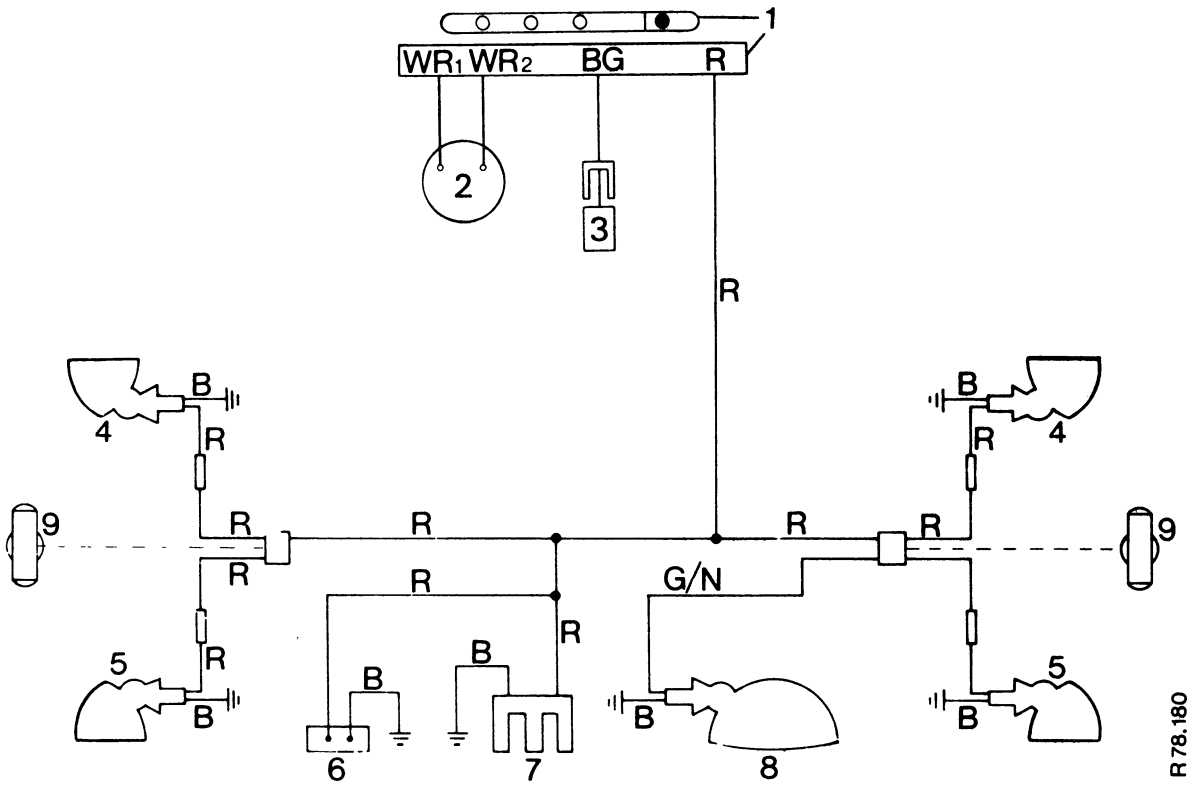

Figure H142
REAR HARNESS
For tractors with shell fenders, from the following serial numbers:

885:633680
990:862037
995:930639
996:985304
1210:727072
1212:1003291

1. 4-way connector.
2. Starter safety switch.
3. Hydraulic filter switch.
4. Side lamps.
5. Rear lamps.
6. Number plate lamp.
7. 2-pin trailer socket.
8. Flood lamp.
9. Single side/rear lamp, installed on some tractor models.

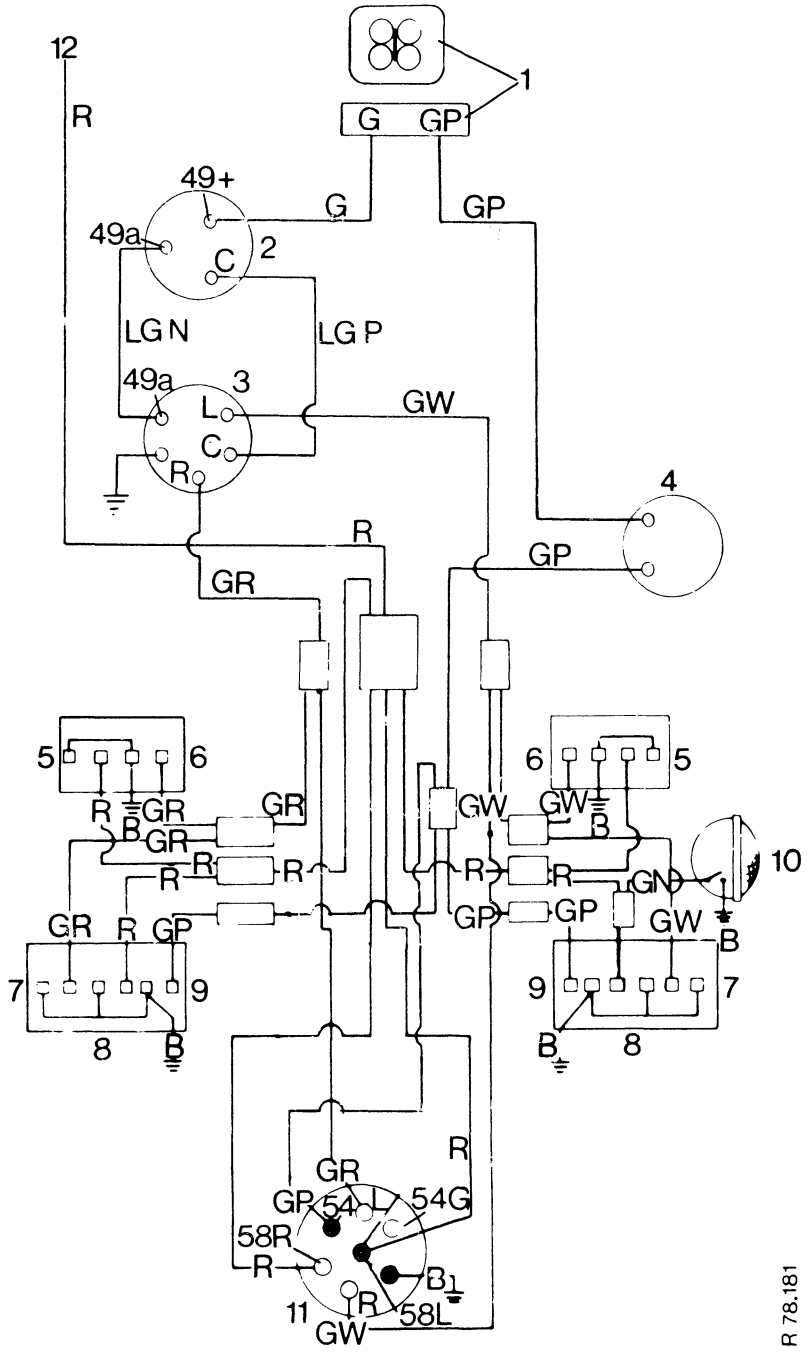

Figure H143
REAR HARNESS

For tractors with light duty type full fenders, from the following serial numbers:

885:630292
990:859162
995:928254
996:985304
1210:723842
1212:1002144

1. 4-way connector.
2. Flasher unit.
3. Indicator switch.
4. Starter safety switch.
5. Side lamps.
6. Front direction indicator.
7. Rear direction indicator.
8. Rear lamps.
9. Stop lamps.
10. Flood lamp.
11. Trailer socket.
12. Wire to lighting switch.

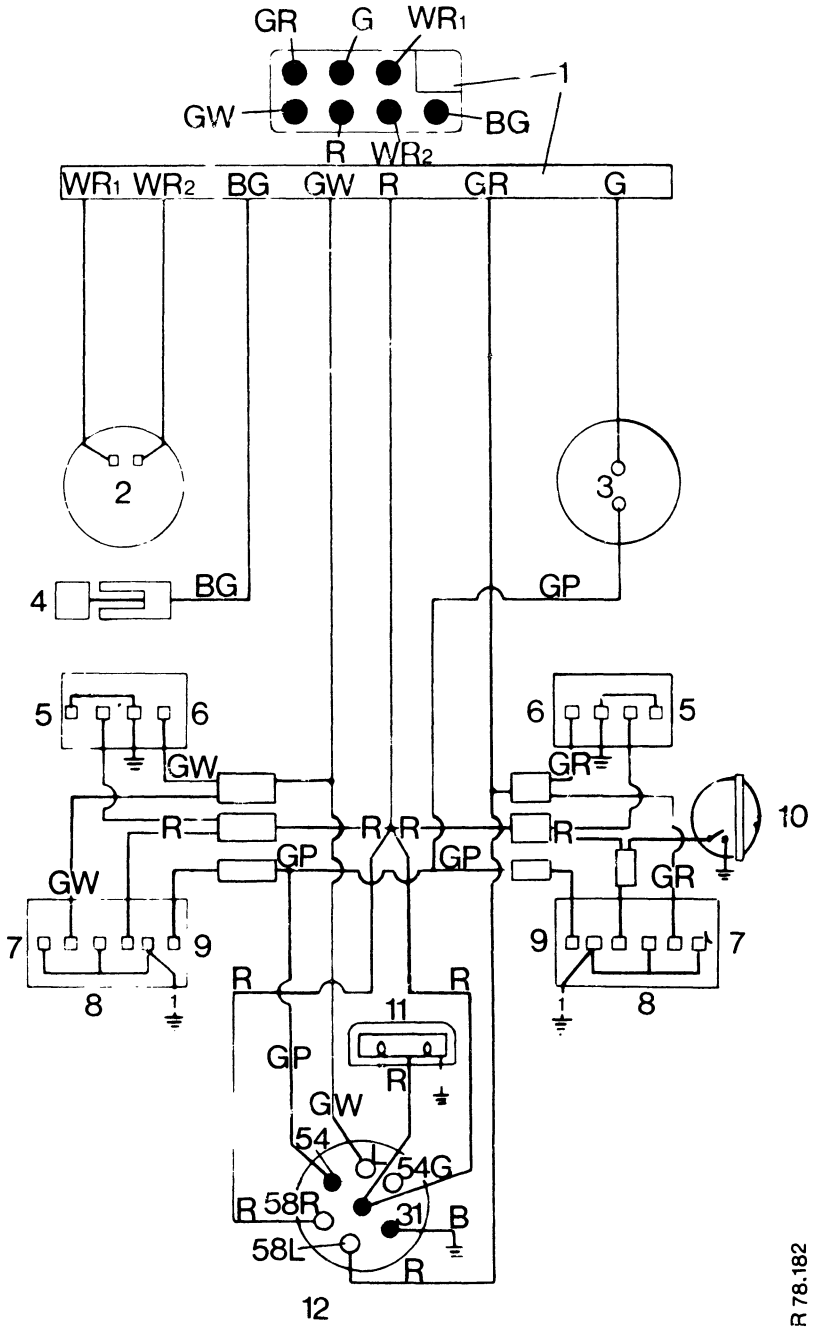

Figure H144
REAR HARNESS
For tractors with reinforced full fenders, from the following serial numbers:

885:633680
990:862037
995:930639
996:985304
1210:727072
1212:1003291
1410) up to
1412) 11200752

1. 7-way connector.
2. Starter safety switch.
3. Stop lamps switch.
4. Hydraulic filter switch.
5. Side lamps.
6. Front direction indicators.
7. Rear direction indicators.
8. Rear lamps.
9. Stop lamps.
10. Flood lamp.
11. Number plate lamp.
12. Trailer socket.

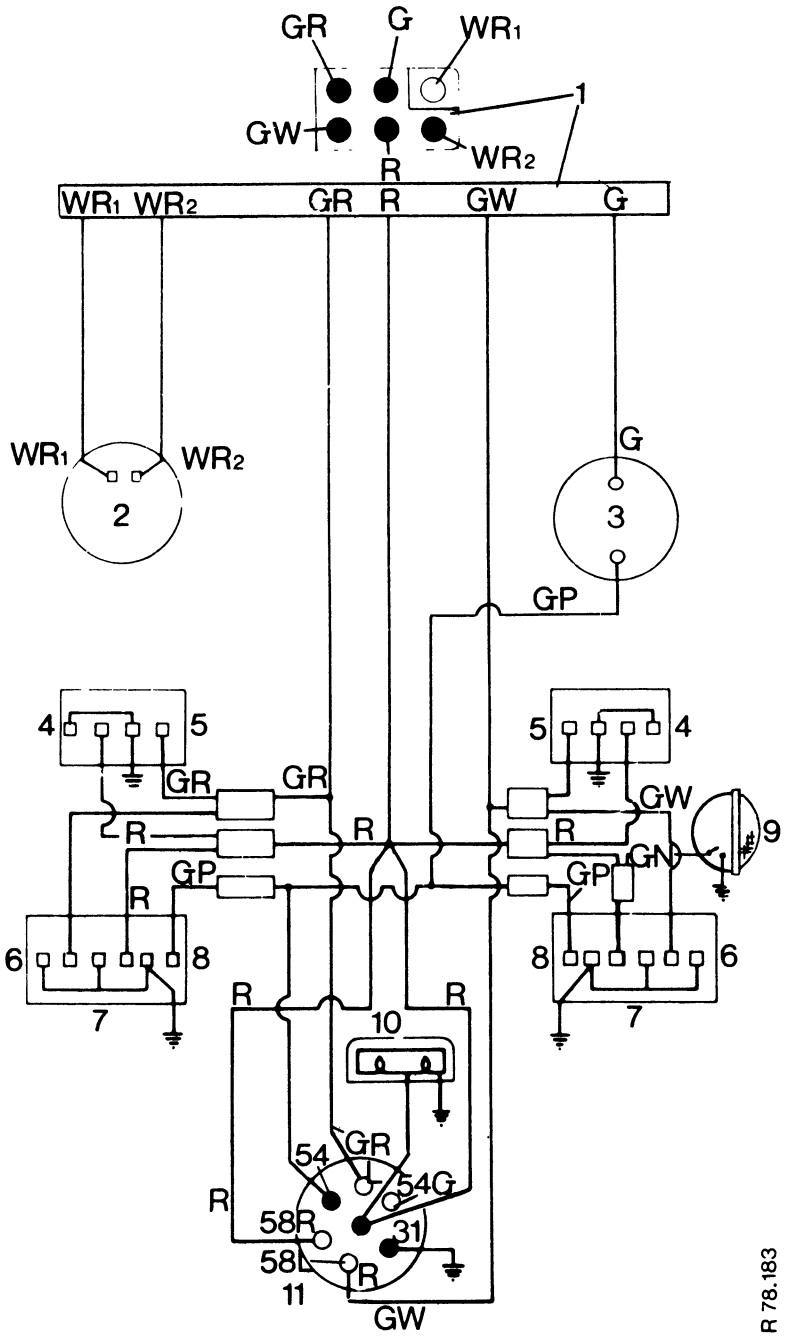

Figure H145
REAR HARNESS
For 12 and 14 series tractors with full fenders, from the following serial numbers:

1210, 1212:11152567 1410, 1412:11200752

1. 6-way connector.
2. Starter safety switch.
3. Stop lamp switch.
4. Side lamps.
5. Front direction indicator.
6. Rear direction indicator.
7. Rear lamps.
8. Stop lamps.
9. Flood lamp.
10. Number plate lamps.
11. Trailer socket.

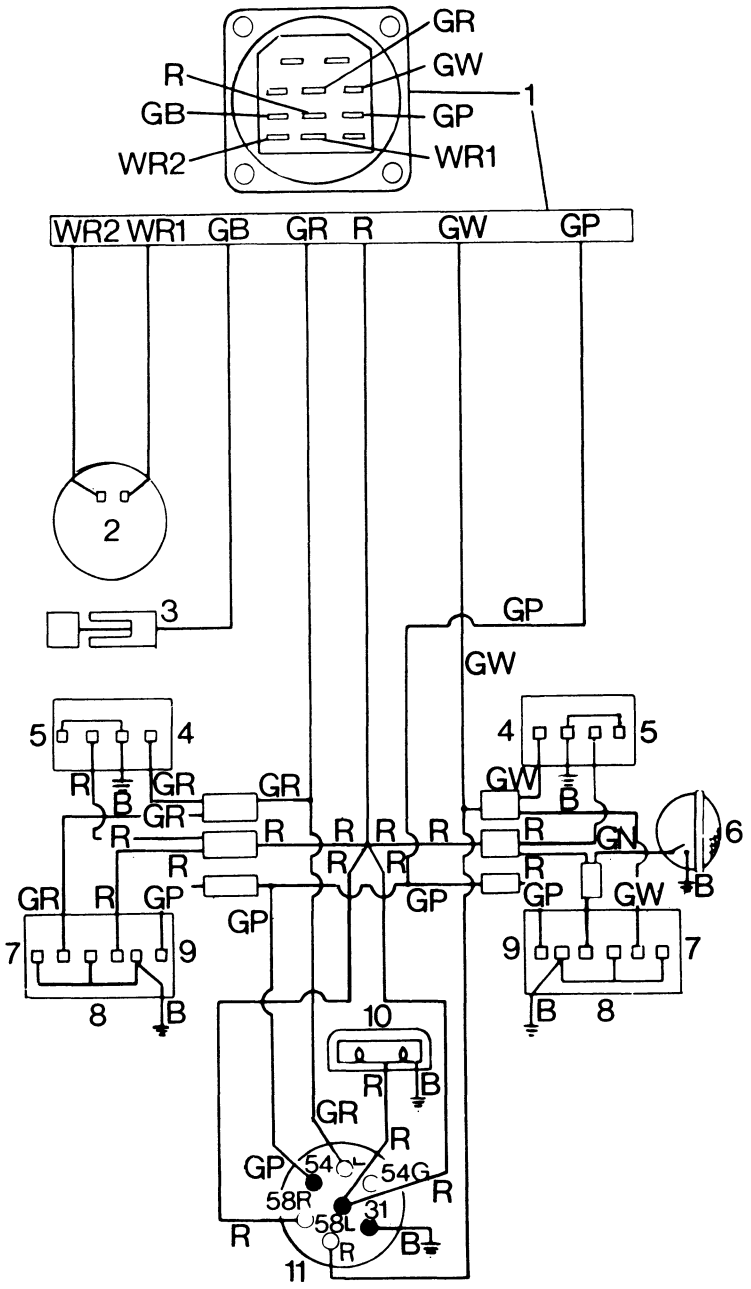

Figure H146
REAR HARNESS
For tractors with Q-cab up to the following serial numbers:

885: 11005680
990, 995, 996 } 11083020
1210, 1212 } 11156513
1410, 1412 } 11202423

1. 11-way connector.
2. Starter safety switch.
3. Hydraulic filter switch.
4. Front direction indicators.
5. Side lamps.
6. Flood lamp.
7. Rear direction indicators.
8. Rear lamps.
9. Stop lamps.
10. Number plate lamp.
11. Trailer socket.

NOTE: Item 3 is not installed on 12 series tractors from 11152617 and 14 series from 11200752.

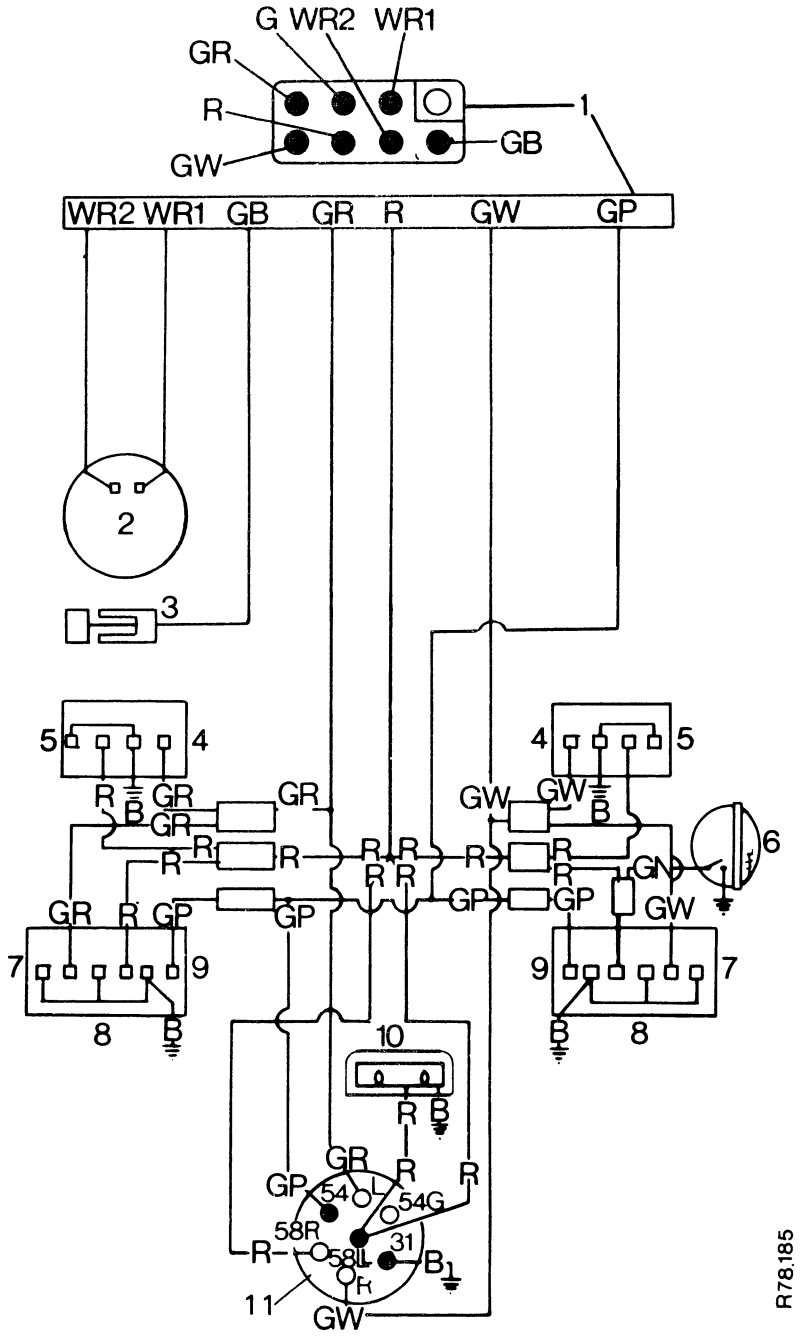

Figure H147
REAR HARNESS
For tractors with Q-cab from the following serial numbers:

885:11006680
990, 995, 996 } 11083020
1210, 1212 } 11156513
1410, 1412 } 11202423

1. 8-way connector.
2. Starter safety switch.
3. Hydraulic filter switch.
4. Front direction indicators.
5. Side lamps.
6. Flood lamp.
7. Rear direction indicators.
8. Rear lamps.
9. Stop lamps.
10. Number plate lamp.
11. Trailer socket.

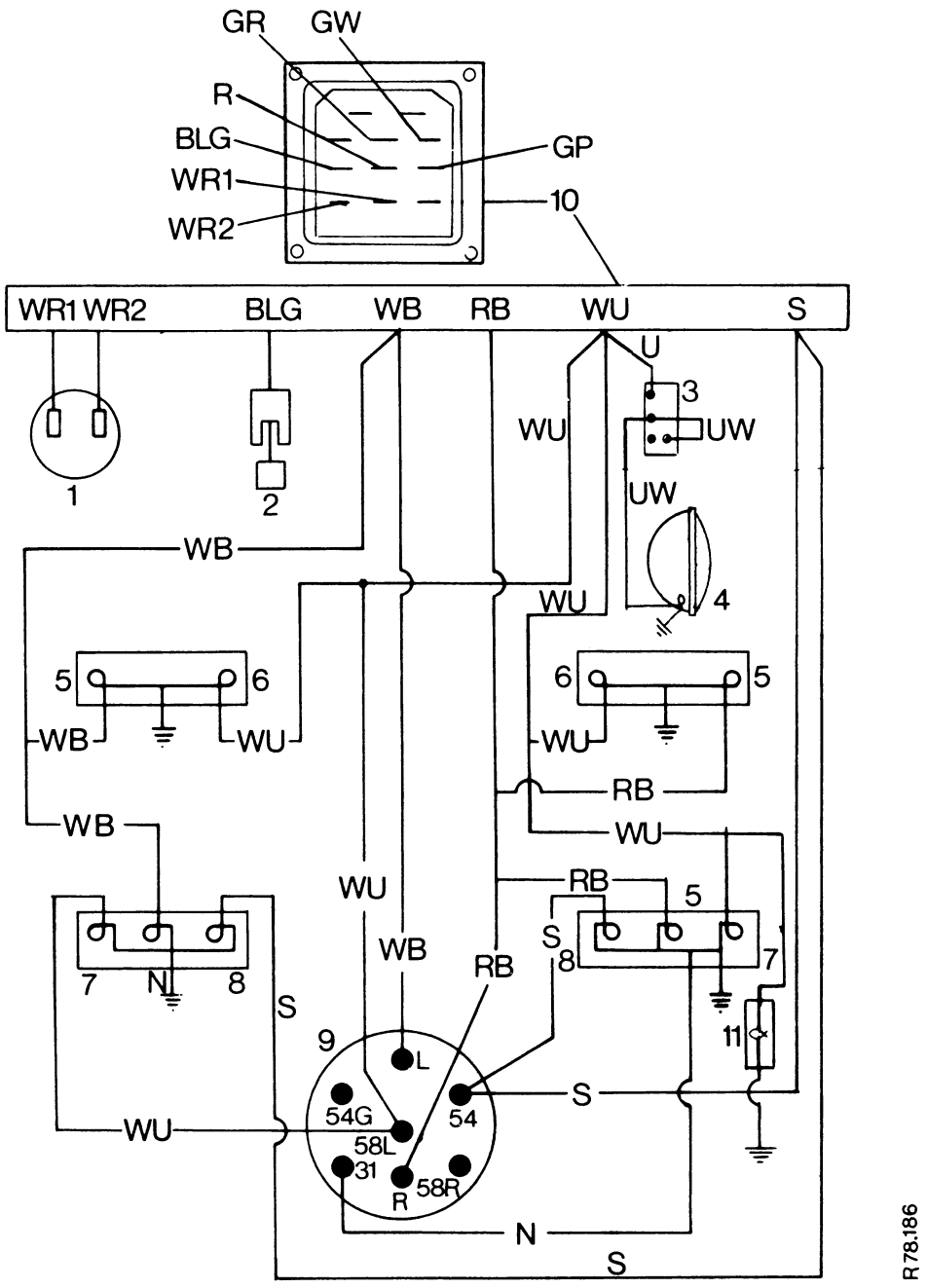

Figure H148
REAR HARNESS
For tractors with de-luxe cab and Sekura cab.

1. Starter safety switch.
2. Hydraulic filter switch.
3. Flood lamp switch.
4. Flood lamp.
5. Direction indicators.
6. Side lamps.
7. Tail lamps.
8. Stop lamps.
9. Trailer socket.
10. Connector, 11-way, to instrument panel.
11. Number plate lamp.

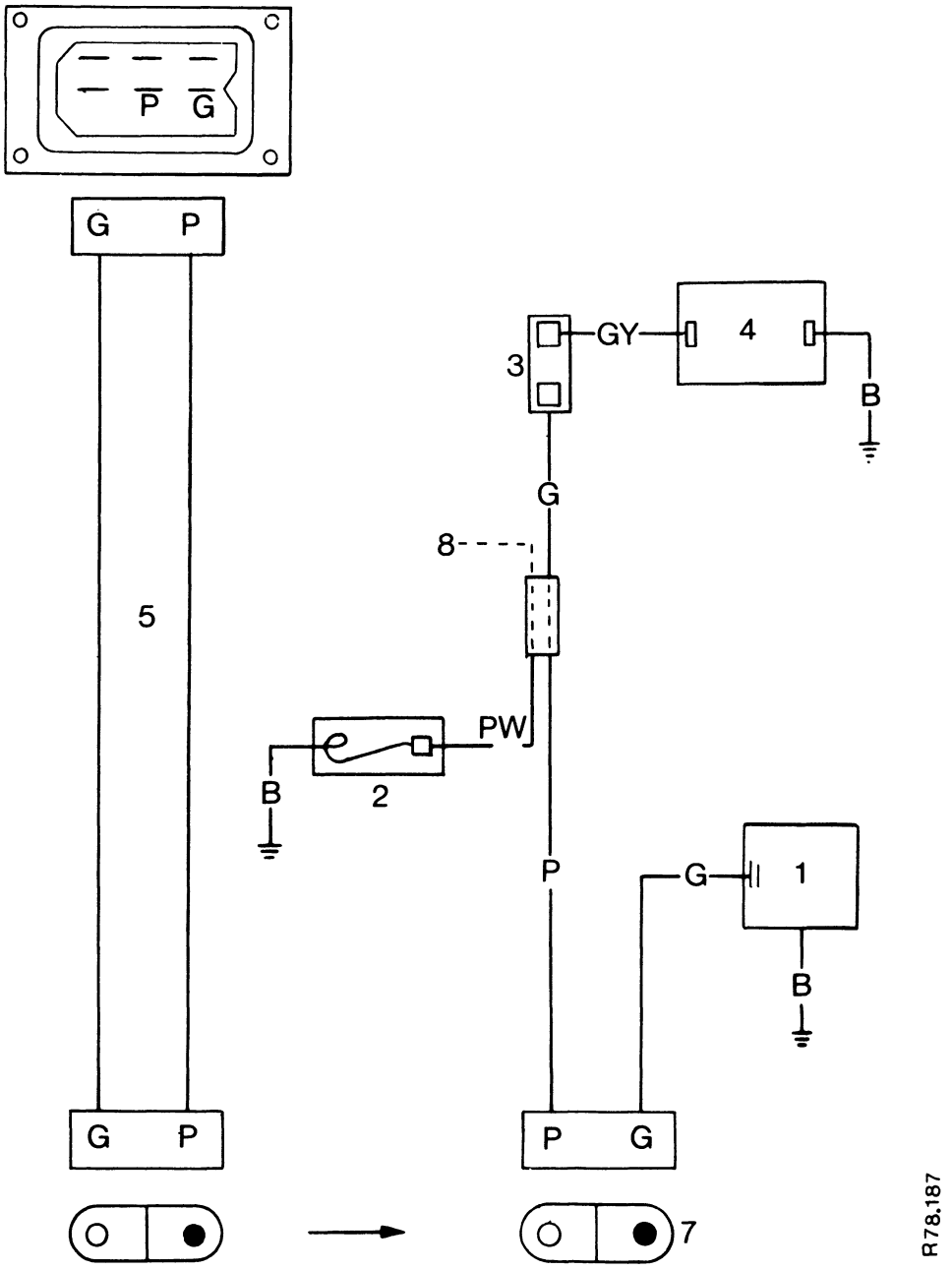

Figure H149
CAB HARNESS

For tractors with Q-cab, from the following serial numbers:

885:11000001
990, 995, 996 } 11070001
1210, 1212 } 11150001
1410, 1412 } 11200001

1. Wiper motor.
2. Cab light and switch.
3. Heater fan switch.
4. Heater fan unit.
5. Console harness.
6. Connector, 2-way, to instrument panel harness.
7. Connector, 2-way, cab to console harness.
8. Use for radio connection with inline fuse.

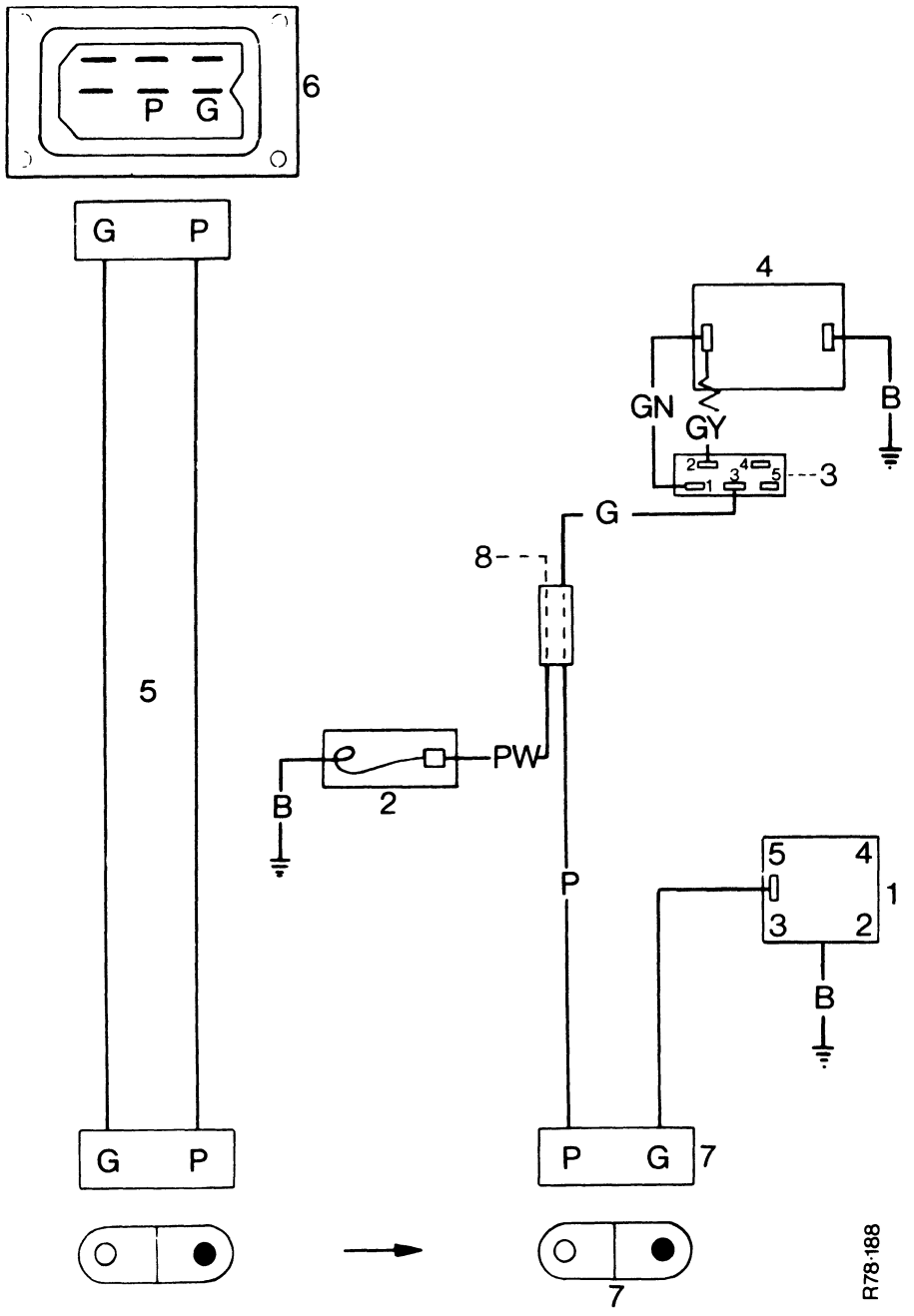

Figure H150
CAB HARNESS
For tractors with Q-cab, from the following serial numbers:

885:11010300
990, 995, 996 } 11088300
1210, 1212 } 11158600
1410, 1412 } 11203600

1. Wiper motor, 2 speed.
2. Cab light and switch.
3. Heater fan switch, 3 positions.
4. Heater fan unit.
5. Console harness.
6. 2-way connector, to instrument panel harness.
7. Connector, 2-way, cab harness to console harness.
8. Use for radio connection with inline fuse.

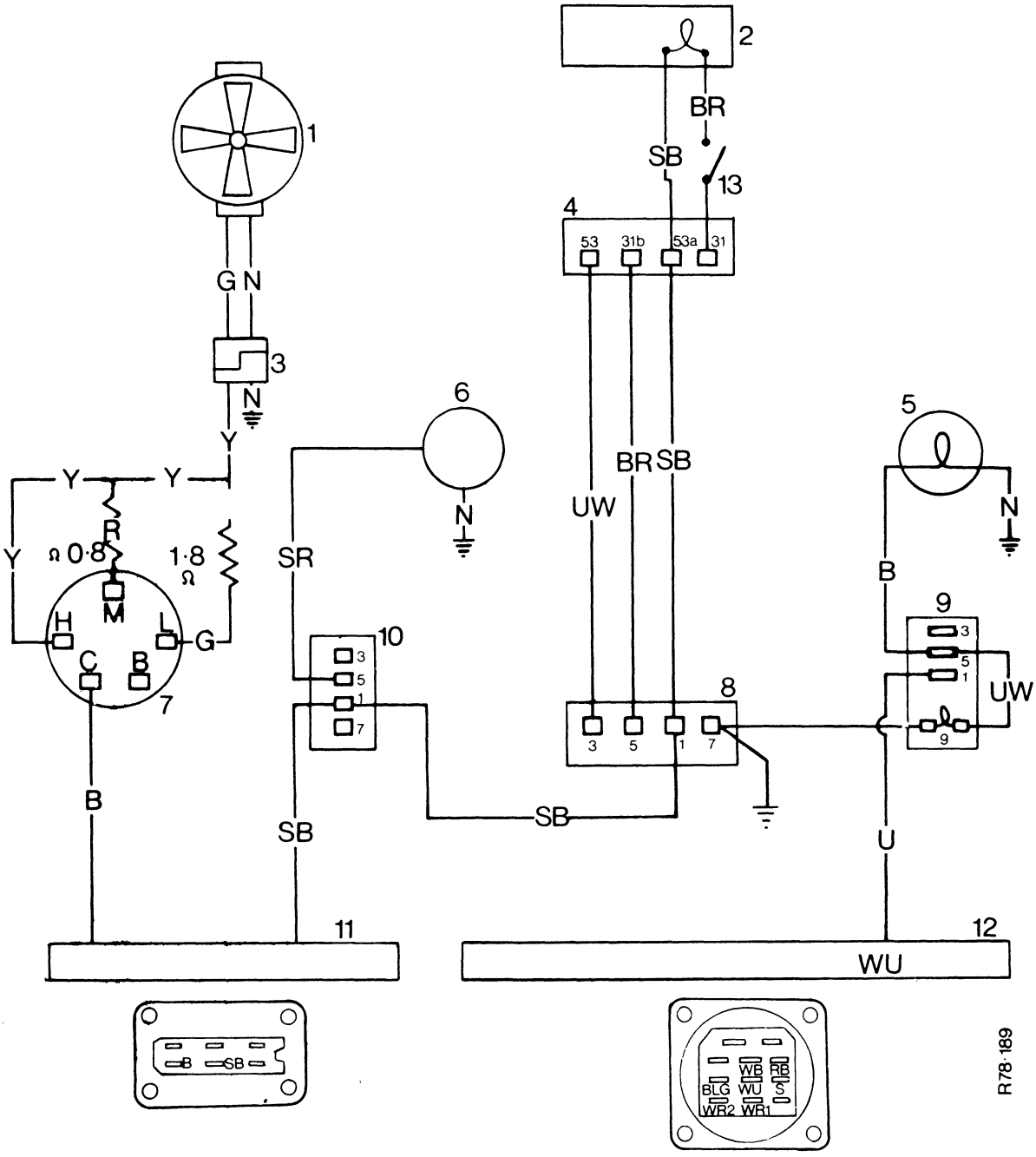

Figure H151
CAB HARNESS
De-luxe cab and Sekura cab.

1. Heater motor.
2. Interior lamp.
3. Connector, 2-way.
4. Wiper motor.
5. Flood lamp.
6. Washer motor.
7. Heater switch.
8. Wiper switch.
9. Flood lamp switch.
10. Washer switch.
11. Connector to instrument panel.
12. Rear harness connector.
13. Interior lamp switch.

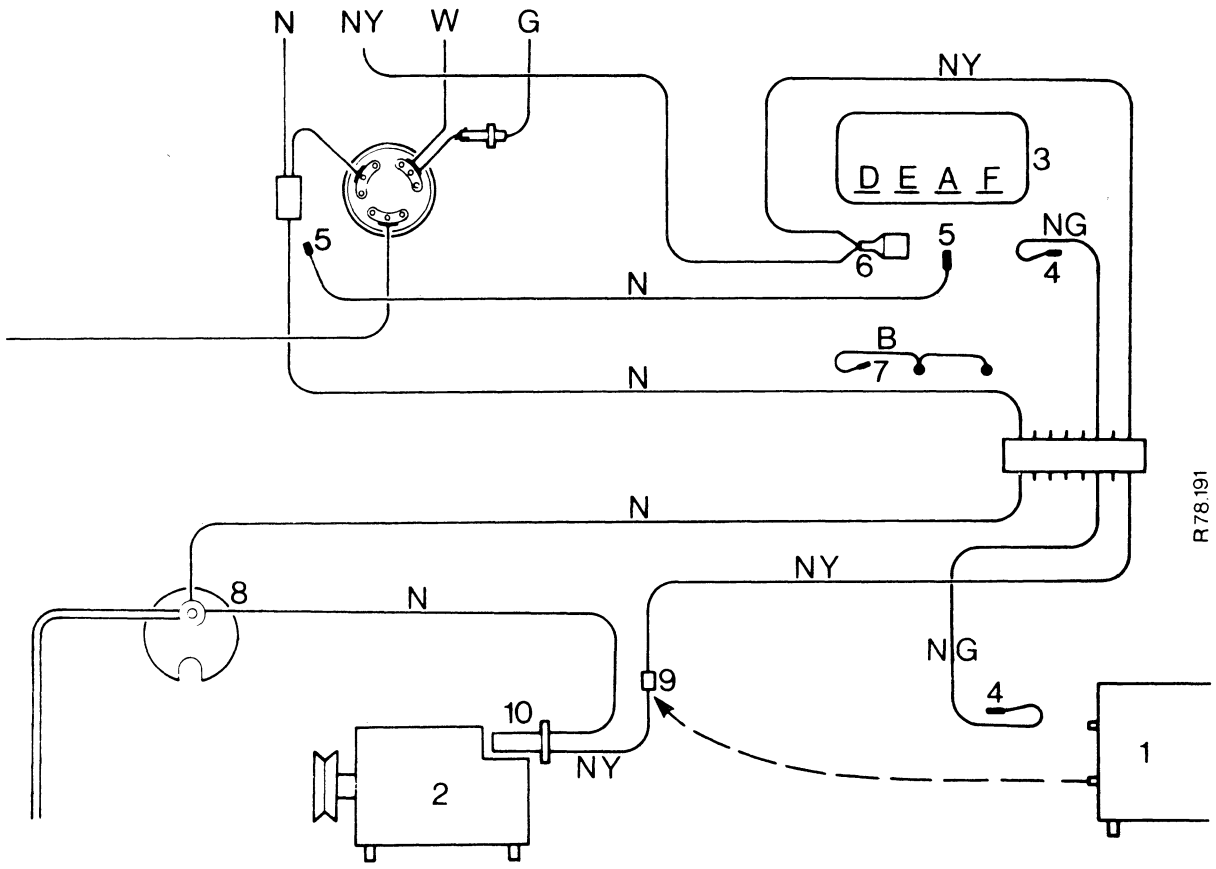

Figure H152
REPLACING A DYNAMO WITH A MACHINE SENSED ALTERNATOR

1. Disconnect and remove the dynamo.
2. Fasten the alternator to the engine, install a new drive belt and adjust the tension.
3. Disconnect and remove the regulator.
4. Cut both ends off the Brown/Green field wire. Fasten it to the harness with tape. This wire will not be used.
5. Remove the Brown wire which is connected between the 'A' terminal of the regulator and the 4-way connector.
6. Make sure the two Brown/Yellow wires are correctly connected together. Put tape around the connection for insulation.
7. Put tape around the end of the Black (ground) wire for insulation.
8. Disconnect the battery. Connect the Brown wire from the alternator to the starter solenoid. Use the same terminal which has a brown wire connected to it. Reconnect the battery.
9. Connect the Brown/Yellow wire, which was disconnected from the dynamo, to the alternator socket.
10. Connect the socket to the alternator and turn the starter key to the 'ACC' position. Check that the warning lamp illuminates. Start the engine, check that the lamp stops illuminating. This will show that the alternator is making a charge.
11. Make sure the operator is told of the procedure to protect the alternator.
    See important note on pages H15 and H21.

SPECIFICATION AND DATA

BATTERY

K929951 (Exide 6/RHAZ 17R) standard duty	1412, 1410
K929951 (Exide 6/RHAZ 17R) heavy duty	1212, 1210
K918881 (Exide 6/TXAZ 15R) standard duty	
K907789 (Exide 6/TXMZ 15L) standard duty	996, 995
K929951 (Exide 6/RHAZ 17R) heavy duty	990, 885
K923878 (Exide 6/TXAZ 11L) heavy duty	885 gasoline

Capacities at 25° Celcius (77° Fahrenheit)

K918881	—	96 amp hours at 20 hour rate
K929951	—	128 amp hours at 20 hour rate
K907789	—	96 amp hours at 20 hour rate
K923878	—	71 amp hours at 20 hour rate

Specific Gravity of electrolyte—initial filling

dry)	(below 25° Celcius (77° Fahrenheit)	1.270 to 1.260
uncharged)	(above 25° Celcius (77° Fahrenheit)	1.240 to 1.230
dry)	(below 25° Celcius (77° Fahrenheit)	1.260
charged)	(above 25° Celcius (77° Fahrenheit)	1.210

Specific Gravity of electrolyte—corrected to 15°C (60°F)

S.G. of filling acid	fully charged	70% charged	discharged
1.260	1.290—1.270	1.250—1.230	1.130—1.110
1.250	1.270—1.250	1.230—1.210	1.110—1.090
1.210	1.230—1.210	1.190—1.170	1.070—1.050

Electrolyte temperature correction—Celcius scale
For every 10° Celcius below 15° subtract 0.007 from the hydrometer reading.
For every 10° Celcius above 15° add 0.007 to the hydrometer reading.

Electrolyte temperature correction—Fahrenheit scale
For every 10° Fahrenheit below 60° Fahrenheit subtract 0.004 from the hydrometer reading.
For every 10° Fahrenheit above 60° Fahrenheit add 0.004 to the hydrometer reading.

Freezing temperature of battery electrolyte

Specific gravity	Freezing point
1.130	— 10° Celcius (–13° Fahrenheit)
1.200	— 30° Celcius (–22° Fahrenheit)
1.280	— 67° Celcius (–90°F)

ALTERNATOR

Lucas type 15 ACR. Machine sensed unit with European Termination

Alternator (without fan and pulley). Lucas despatch number (23700)	23774 (parts replacement)
Polarity	negative earth
Voltage (nominal)	12.0
Voltage (maximum)	14.4
Output (at maximum voltage)	28 amp
Rotor winding resistance (at 20° Celcius)	4.13–4.53 ohms
Brush spring tension (with brush face flush with brush box housing)	255–368g (9–13oz)
Brush length (new)	(12.6mm (½in)
Brush protrusion (minimum when free)	5mm (0.2in)
Regulator—8TRD or 14TR	Lucas 37565
Rectifier pack	Lucas 83166
Surge protection diode	Lucas 54486144

AC-Delco type DN460, 35 amp. Machine sensed

AC-Delco number	7982952
Polarity	negative ground
Voltage, nominal	12 volts
Output, maximum	35 amp
Rotor winding resistance	2.6–3.0 ohm
Brush spring tension	226.8–368.5g (8–13oz)
Brush length, new	13.2mm (0.5in)
Minimum brush length	10mm (0.4in)
Rotation	clockwise from the front

DYNAMO

Lucas type C40A (non-ventilation) } Alternatives	
Lucas type C40T (ventilated) } all models	
Lucas despatch number C40A (22733)	22703 (parts replacement)
Lucas despatch number C40T (22758)	22756 (parts replacement)
Polarity	negative earth
Voltage (nominal)	12 volts
Voltage (maximum)	13.5 volts
Output (at maximum voltage) C40A	11 amp
Output (at maximum voltage) C40T	22 amp
Field winding resistance	6.0 ohms
Brush length (minimum)	8mm (5/16in)
Brush spring pressure, C40A	369–850g (13–30oz)
Brush spring pressure, C40T	567–680g (20–24oz)

Commutator: details—

Minimum diameter (moulded commutator)		37mm (1 29/64in)
Minimum thickness of segments }	fabricated	1.5mm (1/16in)
Depth of undercut }	commutator	0.8mm (1/32in)

VOLTAGE REGULATOR

Lucas type R.B 108
Lucas despatch number. When used with C40A dynamo ... ... 37408 (parts replacement)
Lucas despatch number. When used with C40T dynamo ... ... 37467 (parts replacement)

Regulator voltage setting

Ambient temperature	open-circuit voltage
10° Celcius (50° Fahrenheit)	16.1 to 16.7
20° Celcius (68° Fahrenheit)	16.0 to 16.6
30° Celcius (86° Fahrenheit)	15.9 to 16.5
40° Celcius (104° Fahrenheit)	15.8 to 16.4

Cut-out voltage settings

Cut-in voltage ... ... 12.7 to 13.3 volts
Drop-off voltage ... ... 8.5 to 10.0 volts
Regulator gap setting 0.5mm (0.020in
Cut-out armature movement 0.6–1.0mm (0.025–0.040in)
Cut-out contact blade deflection 0.25–0.5mm (0.10–0.20in)
Regulator field resistance:
Carbon resistance ... ... 60–75 ohms
Wire wound resistance ... ... 55–65 ohms
Shunt winding resistance (checked between 'D' and 'E' terminals) ... ... 50–56 ohms

STARTER MOTORS

1412, 1410: Part No. K919752 (Lucas M50. No. 26379A)
1212, 1210, 1200, 996, 995, 990: Part No. K89772 (Lucas M45G. No. 26278)
885 diesel, 880, 780: Part No. K913007 (Lucas M45G. No. 29215)
885 gasoline from January 1973: Part No. K944488 (Lucas 3M100. No. 25679A)
4600, 3800, 885 gasoline to January 1973: Part No. K922703 (Lucas No. M45G. No. 26277)
Alternative starter on:
1210, 1212 from Serial No. 11157537 and 1410, 1412, 996, 995, 990, all from August 1977:
Part No. K954700 (Bosch No. 00-001-362-060)

Brush length (minimum) M45 and M50 ... ... 14mm (5/16in)
Brush length (minimum) 3M100 ... ... 9.5mm (3/8in)
Brush spring tension:
M45 and M50 (with new brush) 1.47kg (52oz)
3M100 with new brush protruding 0.06in (1.5mm) 1.22kg (43oz)
Commutator diameter (minimum) M45 and M50 ... ... 38.1mm (1.50in)
Bearing bush diameters (maximum)

Commutator end, Intermediate, Drive end } M45 and M50 ... ... 12.83mm (0.505in) / 28.63mm (1.127in) / 17.14mm (0.675in)
Drive end } 3M100 ... ... 11.2mm (0.441in)
Commutator end } 3M100 ... ... 12.1mm (0.476in)
Armature end-float ... ... 0.13 to 0.26mm (0.005 to 0.010in)
Multi-plate clutch slip torque ... ... 9.25–11kg metres (800–950lb in)
Pinion setting distance (diesel starters)
M45G roller clutch 0.13–0.38mm (0.005–0.015in)
M45G multi-plate clutch 0.51–0.76mm (0.020–0.030in)
M50 roller clutch 0.13–1.143mm (0.005–0.045in)

Solenoid details
919752 starter ... ... type 18S
26278 starter ... ... type 19S
26215 starter ... ... type 7S
25679 and 26277 starters ... ... type 4ST
Closing (series) winding resistance ... ... 0.25–0.27 ohms
Hold-on (shunt) winding resistance ... ... 0.76–0.80 ohms
Both windings in series ... ... 1.01–1.07 ohms

FUEL GAUGE

Tank Unit—1412, 1410, 1212, 1210, 1200—K916755	(AC-Delco 7967414)
Tank Unit—996, 995, 990—K946158	(AC-Delco E/PG 163902)
Tank Unit—996, 995, 990, 880, 780, 770—K916635	(AC-Delco 7967410)
Tank Unit—885, 885G—K946184	(Smiths Ex 15601)
Tank Unit—885, 885G—K943347	(Smiths TBS 1514/008)
Instrument—all models except 885—K921147	(AC-Delco 7974119)
Instrument—885, 885G—K942442	(Smiths BR/2100/02)
Voltage Stabiliser—885, 885G—K942740	(Smiths BR/1300/01A)

TEMPERATURE GAUGE

Sender unit—all models—K921149	(AC-Delco 7966281)
Instrument—all models—K921148	(AC-Delco 7966282)

WARNING LAMP SWITCHES

Oil filter switch—all models—K921317	(AC-Delco 7954473)
Operating vacuum oil filter switch	19.7–222mm ($7\frac{3}{4}$–$8\frac{3}{4}$in) Hg.
Oil pressure switch—all models—K903851	(AC-Delco 7954181)
Operating pressure, oil pressure switch	0.6–0.9kg/sq cm (9–13lb/sq in)

WIPER MOTOR

Lucas model 14W, 12 volts	Lucas 54071929
Brush length	Minimum 4.8mm (3/16in)
Brush spring pressure	17Nm, 6ozf or 170gf
Armature end movement	0.05–0.25mm (0.002–0.010in)
Yoke bolts, torque	1.35–1.80Nm, 0.138–0.184kgm, 12–16ft lb

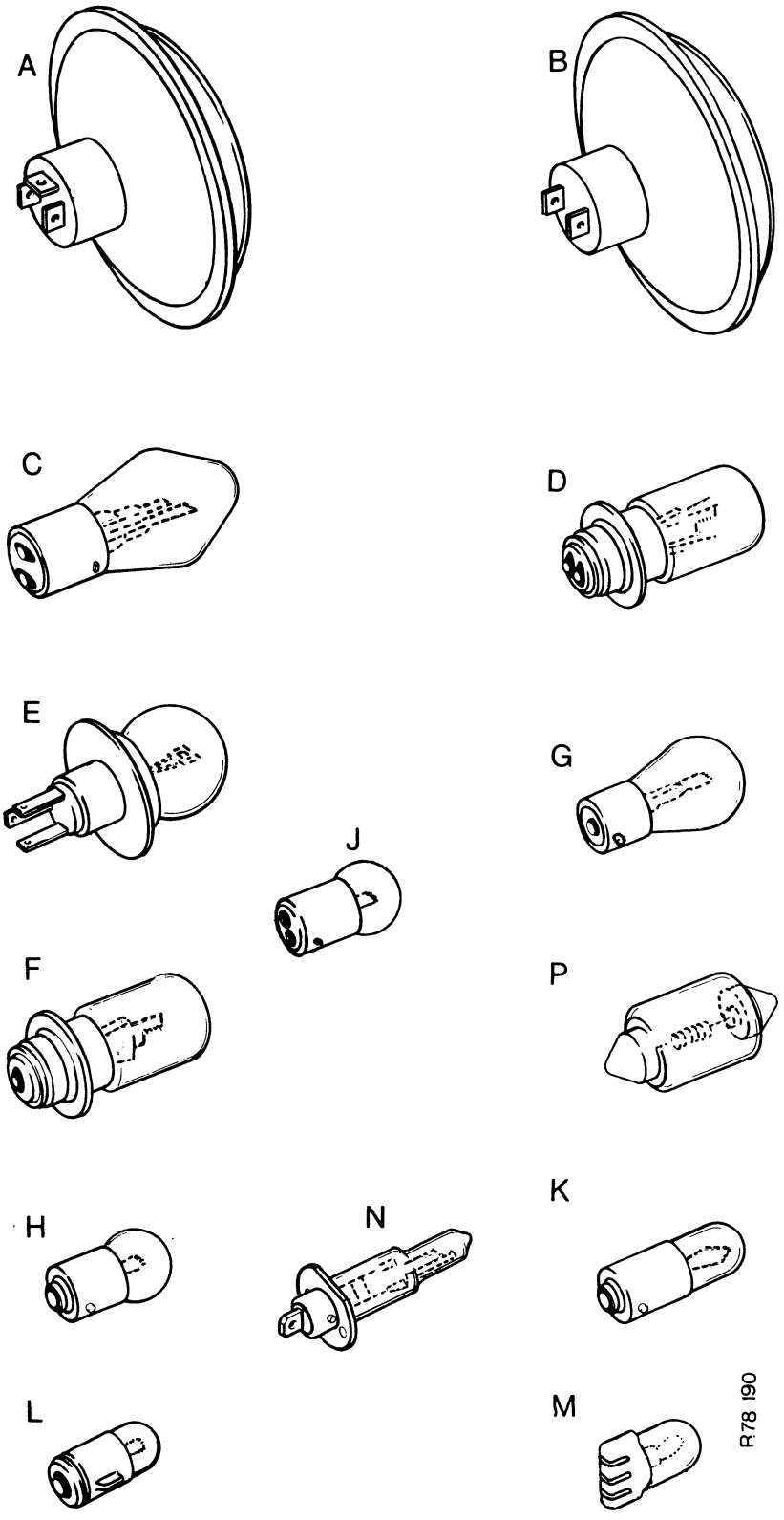

Figure H153
TYPES OF BULBS

LAMP BULBS

	Description	Qty.	Remarks
A	Sealed Beam 12V–40/40W 3 pin Butler Part No. 1720-40 G.E.C. Part No. GE 4440	2	Headlamp–Inboard K915874
B	Sealed Beam 12V–35W 2 pin Butler Part No. 1720-38 G.E.C. Part No. GE 4411	2	Headlamp–Inboard K915141
C	Double Contact 12V–35/35W Unified European Cap Hella Part No. B 1235/35	2	Headlamp–Inboard European K917233
D	Double Contact 12V–35/35W B.P.F. British Pre-Focus Butler Part No. B 275 Lucas Part No. 350	2	Headlamps–Outboard U.K. K921082 K921083
E	Double Filament 12V–45/40W Duplo 'D' Continental Pre-Focus Butler Part No. B 268 } White Lucas Part No. 410 } Butler Part No. B 295 } Yellow Lucas Part No. 411 }	2	Headlamps–Outboard Continental K944729 K944730 K944731 K944723
F	Single Contact 12V–35W B.P.F. British Pre-Focus Butler Part No. B 165 Lucas Part No. 162	1	Rear Flood Lamp K943976 K943977 K921081
G	Single Contact 12V–21W S.C.C. Small Bayonet Cap Butler Part No. B 364 Lucas Part No. 382	6	Combined Lamps Flasher & Stop K948815/6 K929166/7 K929168/9 K929172/3 K948813/4
H	Single Contact 12V/5W S.C.C. Butler Part No. B 370 Lucas Part No. 223 (14V/7W)	4	Side & Tail
J	Double Contact 12V/5W S.B.C. Small Bayonet Cap Butler Part No. B 201 Lucas Part No. 218 (14V/7W)	2 or 4	Side Tail Lamp K921079/80 K921233/4 K921235/6
K	Single Contact 12V/5W M.C.C. Small Bayonet Cap Butler Part No. B 267 Lucas Part No. 989	1 or 2	Rear Number Plate Lamp 943308 K773358 K921076 Hazard Warning Switch K944664
L	Single Contact 12V/2W B.A.7s Miniature Bayonet Cap Lucas Part No. 281 Philips Part No. 12829	5	Warning Lamp & Indicator Switch K917370/1 K921367 K94364 K913565
M	Capless 12V/5W 5mm Panel Double Contact Lucas Part No. 286 Philips Part No. 12516	1	Hazard Warning Switch K947482
N	Halogen, 12V/55W	1	Flood Lamp, De-luxe and Sekura cab
P	Festoon 12V/5W	4	Side and rear lamps later tractors
	Festoon 12V/10W	1	Cab Lamp

SUMMARY OF DESIGN CHANGES

Details of Change	Models and Serial Numbers
Colour code of wiring changed to conform to British Standard practice. Isolating switch changed from K961975 (AC-Delco) to K920923 (Lucas)	770/588498 880/544392 990/504027 1200/703305 (November, 1967)
Starter safety switch (K918672) changed to plunger operated switch (K916479) operated directly from clutch pedal	880/547055 990/800751 (March, 1968)
Lighting switch (K912388, 5-position) changed to a 4-position switch (K902464). Vacuum switch wiring re-routed through conduit on gearbox top	770/589439 780/601520 880/547986 990/802575 1200/705856 (May, 1968)
Voltage regulator earth lead (K921174) changed to lead K924142, which has two earthing points. One under regulator mounting bolt and another under fuel tank support	770/590006 780/602231 880/549153 990/804700 1200/706430 4600/900196 (October, 1968)
Stop lamp switch (K917301) changed to switch K929737, which is positioned on left-hand brake pedal so that stop lamps do not operate when hand brake is applied	1200/718062 (November, 1971)
Combined stop/rear/direction indicator lamps fitted to tractors with full fenders instead of the separate lamps fitted previously	780/610673 880/562338 990/829679 1200/717256 (October, 1971)
Fuse incorporated in accessories lead, to provide protection for equipment which is operative when isolating switch is turned 'on', e.g. windscreen wiper, instruments, etc.	885/620001 885G/651001 885N/646001 990/850689 995/920003 1210/720001 1212/100049 (July, 1972)
Starter K922703 (Lucas M45G) changed to Lucas 3M100 starter (K944488). The new starter, which has a face type commutator and window-less yoke, is interchangeable with previous starter	885G/651141 (December, 1972)
Flasher unit (K913564—18 watt rating) changed to a 21 watt unit K945512. Units are interchangeable and later unit should always be used as a replacement	885/624732 885G/651239 990/854925 995/925509 996/981938 1210/722546 1212/100125 (March, 1973)

SUMMARY OF DESIGN CHANGES

Details of Change	Models and Serial Numbers
Isolating switch K920923, changed to switch K945294, which has a larger connector blade on input terminal	885/626173 885G/651239 885N/646322 990/855819 995/926076 996/982318 1210/732932 1212/1001467 (April, 1973)
Fuel tank unit position changed from front to top of fuel tank. Part number of tank unit changed from K916635 to K946158	996/983083 995/926701 990/856494 (June, 1973)
Fuel gauge tank unit position changed from front to top of fuel tank. Part number of tank unit changed from K943347 to K946184	885/626877 885G/651280 (June, 1973)
Alternator mounting bracket changed from K912758, which was also used for mounting dynamo, to bracket K947375, which can only be used for alternator	All Models (June, 1974)
Wiring harness changed to include two multi-pin sockets, to facilitate instrument panel removal. Hazard warning switch K944664 changed to K947482 and flasher unit changed from K945512 to K948611	1212/1002145 1210/723843 996/985305 995/928255 990/959163 885/630293 (February, 1975)
New battery clamp frame K947080 with vertical studs and wing nuts installed	885, 885N } June 1975 990/866452 995/934315 996/987778 1210/730832 1212/1004792
Latest type wiring with multi-pin sockets installed on German models for easier removal and servicing	885G/638731 990G/868010 995G/835195 996G/988358 (October, 1975)
Bayonet type bulb holders installed in Butler side and rear lamps	885/11000001 990, 995, 996 } 11070001 1210, 1212 } 11150457 1410, 1412 } 11200001 (January, 1976)
Hazard warning switch installed. 5-way female connector for flasher unit installed	885/11001375 (April, 1976)
Hydraulic filter warning system removed from 12 and 14 series tractors	1210 } 11152576 Series 1 1212 } 11152617 Series 2 1410, 1412 } 11200752 (June, 1976)
Capless type bulbs and holders installed for instrument panel	1210, 1212 } 11150721 1410, 1412 } 11200162 (April, 1976)
AC-Delco Alternator installed on some tractors	(April, 1977)
Front console harnesses added to wiring on tractors with Q-Cabs	8 series/1100680 9 series/11083020 12 series/11156513 14 series/11202423 (April, 1977)

Details of Change	Models and Serial Numbers
Thermostart installed as normal equipment on tractors with Q-Cabs	885/11007594 990, 995, 996 } 11157412 1210, 1212 } 11084956 (June, 1977)
Festoon type bulbs installed in Butler side and tail lamps.	8 series 11007544 9 series 11084517 12 series 11157259 14 series 11202741 (June, 1977)
Bosch pre-engaged starter installed on some four cylinder engines	(July, 1977)
Warning lamp for headlamp main beam installed on Sekura cabs for Scandinavia	8 series/11011842 9 series/11090489 12 series/11660275 14 series/11204265 (March, 1978)

Miscellaneous

SERVICE INFORMATION

1410, 1412 TRACTORS

Including "Q" Cab Models

This section replaces 9-38121

CASE CORPORATION

Pub 9-38124

PRINTED IN U.S.A.

INTRODUCTION

This publication is intended to provide information which may be required when servicing DB1410 and 1412 tractors. It is not a comprehensive repair manual but is a summary of service information with emphasis on features which are new, or different, from previous DB models.

For convenient reference the publication is divided into the usual sections, i.e. engine, clutch, etc. These sections are arranged in the same order as the service manual sections and will, in due course, be updated and incorporated in the regular service manual.

Front axle and steering, the hydraulic system and electrical equipment are not included as the respective sections of the service repair manual include information on 1410 and 1412 tractors.

This edition includes information previously given in:

Pub. 9–38121 (Preliminary Service Information, issued May 1976)
Pub. 9–38151 (updated pages A5, 7, 11 and 13)
Pub. 9–38155 (updated pages B13/4)
Pub. 9–38175 (updated pages D5 and section F)
Pub. 9–38162 'Q'-Cab Preliminary Service Information—(certain information only)

CONTENTS

SECTION	DETAILS	PAGE
Turbocharged Engine		
	How it works	A1
	Unit removal and replacement	A2
	Unit maintenance and repair	A6
	Specifications and data	A11
Clutch		
	How it works	B1
	Unit removal and replacement	B2
	Unit maintenance and repair	B6
	Clutch Hydraulic System	
	How it works	B14
	Unit removal and replacement	B14
	Unit maintenance and repair	B15
	Specifications and data	B16
Transmission		
	How it works	C1
	Unit removal and replacement	C1
	Unit maintenance and repair	C6
	Specifications and data	C7
Final Drive Reductions		
	How it works	D1
	Unit removal and replacement	D2
	Unit maintenance and repair	D3
	Specifications and data	D7
Brakes		
	How it works	F1
	Unit removal and replacement	F3
	Unit maintenance and repair	F5
	Specifications and data	F6
	Brake Hydraulic System	
	How it works	F7
	Unit removal and replacement	F7
	Unit maintenance and repair	F8
	Specifications and data	F9

HOW IT WORKS—TURBOCHARGED ENGINE

The power output of an engine is determined by the amount of fuel that can be burnt in a given time. For proper combustion the fuel needs an adequate supply of air so that for an increased power output more air is required

The volume of the engine cylinders is fixed but the air supply can be increased by using a blower to fill the cylinders with air which is denser and therefore capable of burning more fuel.

A turbocharger is a simple turbine-driven compressor which utilises energy in the exhaust, and which would otherwise be wasted, to compress the air before it enters the engine cylinders. This enables more fuel to be burnt efficiently and thus more power produced. When the engine is running, exhaust gas expelled from the cylinders passes through the exhaust manifold and enters the turbine housing. The gas then flows from the circumference of the housing through a narrow slot to the turbine blades. This causes the turbine to rotate at very high speed and the gas leaves the turbine at its centre and into the atmosphere through the silencer. Air drawn through the air cleaner in the normal way enters at the centre of the compressor and as the compressor wheel is attached to the end of the turbine shaft, and therefore revolving at the same high speed, air is expelled radially into the compressor housing. Air in the compressor housing is thus maintained under pressure and flows into the engine cylinders via the inlet manifold.

The very high rotational speed of the turbocharger, which can approach 100,000 rev/min, requires a pressure oil feed from the engine lubrication system to lubricate the shaft bearing and cool the unit. A large drain pipe is also provided so that any air entering the oil from the compressor is released before the oil is returned to the sump.

To maintain reliability it is necessary for the structural strength, lubrication and coolant flow of the engine to be matched to the higher engine power. The air cleaner must also be of adequate capacity for the increased air flow. A turbocharged engine must therefore be designed from the outset as a turbocharged unit and is not a naturally aspirated engine which has been fitted with a turbocharger.

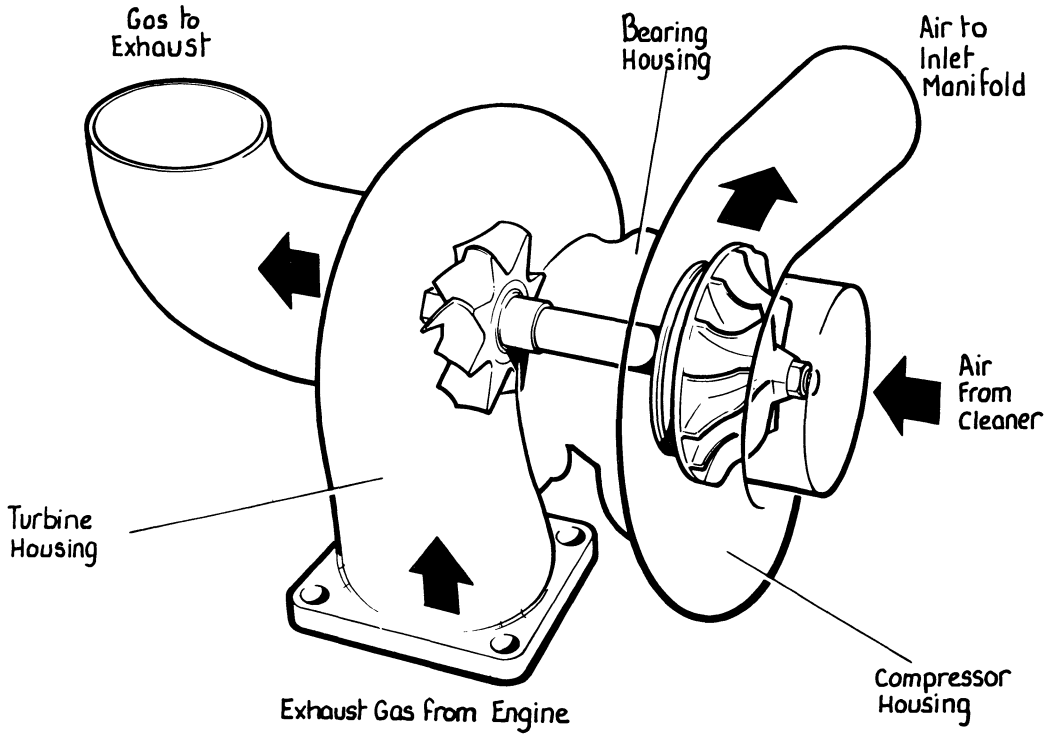

FIGURE A1. TURBOCHARGER

Turbocharger

After removing silencer and bonnet top, disconnect air pipes from air cleaner and inlet manifold. Disconnect turbo oil feed pipe and remove upper half of oil drain pipe. Unscrew adaptor from drain hole in turbo body—this will provide more room for removing the adjacent mounting nut—then remove turbo, complete with exhaust outlet pipe, from manifold. Outlet pipe to silencer has a ground spigot—no gasket—into turbo body and can be separated after removal.

Seal turbo oil pipe connections immediately after removal, to prevent dirt reaching turbo bearing.

Replace turbocharger in opposite way to removal; fitting outlet pipe into turbo body before bolting turbo to exhaust manifold.

Before connecting oil feed pipe, fill turbo oil chamber with *clean* engine oil; to provide initial lubrication.

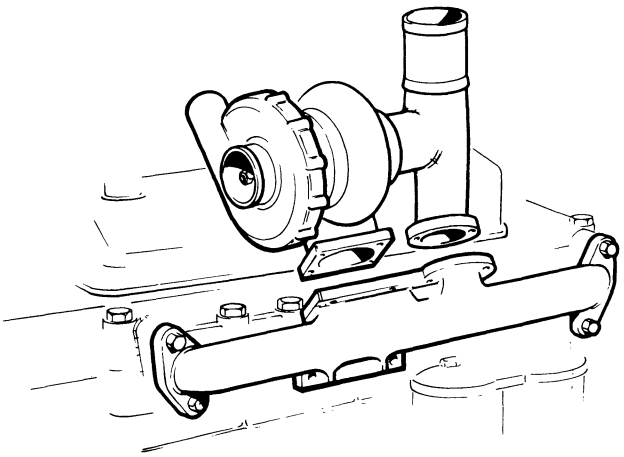

FIGURE A2. REMOVING TURBOCHARGER

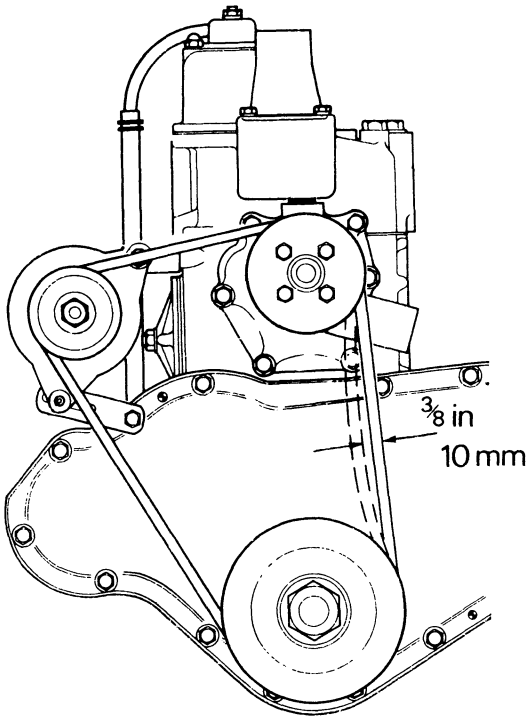

FIGURE A3. FAN BELT ADJUSTMENT

Thermostat

Drain cooling system. Disconnect air pipe from cleaner to turbo and remove bolts attaching cover to thermostat housing. Remove air cleaner, complete with thermostat housing, then lift out thermostat.

Replace in reverse order of removal, fitting a new 'O' ring under thermostat.

Fan Belt

Slacken alternator mounting bolts, so that alternator can be pushed down to release fan belt tension. Remove the four bolts attaching hydraulic driveshaft coupling to crankshaft pulley and screw two of the bolts into the tapped holes in coupling to separate coupling from pulley. Push coupling on driveshaft and remove rubber distance piece from end of driveshaft. Manipulate new belt over fan blades then past driveshaft end and over crankshaft and alternator pulleys. Position alternator to adjust belt tension then fully tighten mounting bolts. Replace rubber distance piece at end of driveshaft then bolt coupling flange to crankshaft pulley, and replace 'O' ring inside coupling.

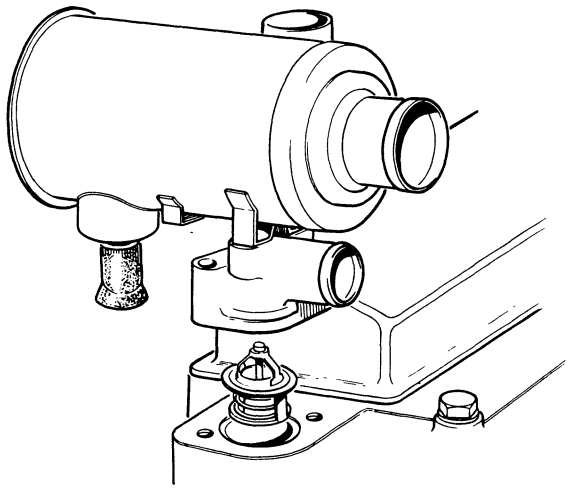

FIGURE A4. THERMOSTAT REMOVAL

Water Pump

Release fan belt tension by slackening alternator mounting bolts and pushing alternator downwards. After draining cooling system, remove pump inlet hose and remove the four bolts attaching fan to pump pulley. Lift fan from pulley and stow it in radiator shroud then remove bolts attaching pump to cylinder block. Pump assembly may then be removed by pivoting pump body downwards on the remaining stud until the by-pass seal is clear of thermostat housing.

Replace pump in opposite way to removal, fitting a new 'O' ring at rear of pump body. After sliding pump on to mounting stud, place new rubber by-pass seal in body recess then pivot pump upwards to compress seal and allow bolts to be screwed into cylinder block. Refit drive belt before bolting fan to pump pulley.

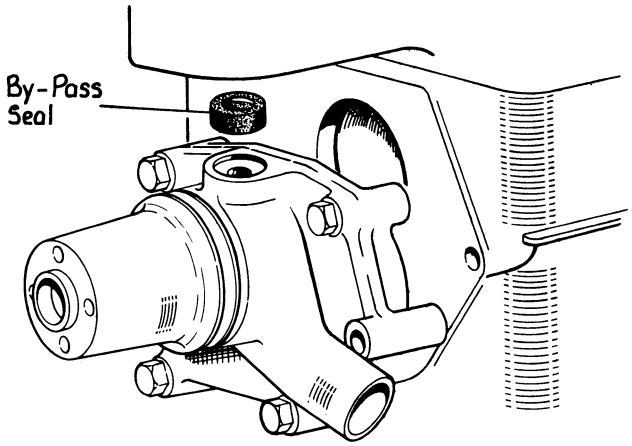

FIGURE A5. WATER PUMP REMOVAL

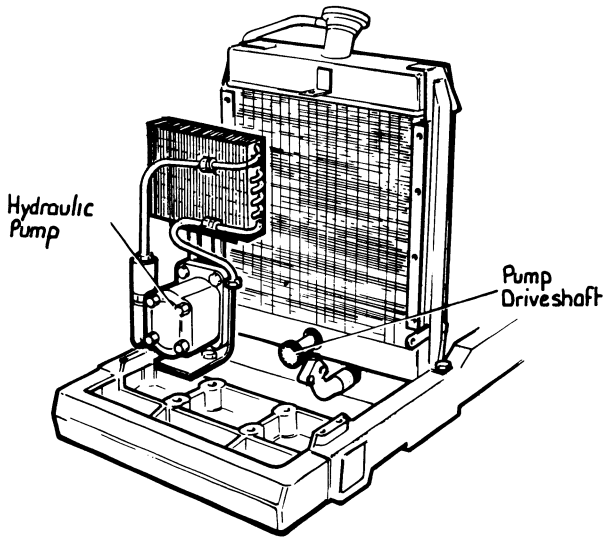

FIGURE A6 RADIATOR REMOVAL

Radiator

Remove bonnet top and drain cooling system. Disconnect and remove battery. If front chassis ballast weights are fitted, lower frame on to front axle. Remove the four nuts from front extension and six bolts into radiator then disconnect headlamp wiring and lift off bonnet front.

Disconnect inlet and outlet pipes from hydraulic pump, so that pump can be removed complete with mounting bracket and oil cooler. Remove driveshaft coupling from crankshaft pulley: if coupling is not easily separated from pulley, screw two of the bolts into tapped holes in coupling flange. Disconnect inlet and outlet hoses from radiator then remove mounting bolts and lift radiator off with driveshaft through lower tank.

Replace radiator in reverse order of removal, first fitting driveshaft through lower tank and replacing rubber distance piece on shaft end before bolting coupling to crankshaft pulley. Take special care to ensure that no dirt is allowed to enter the open pump or pipe connections.

Fuel Tank

As a full fuel tank is very heavy, the less fuel there is in the tank the easier it is to lift off. Disconnect lower end of hand throttle lever so that lever can be pulled upwards out of instrument panel. Disconnect tractormeter cable at engine end then pull cable out so that it can be removed with panel. Remove injector leak-off pipe. Disconnect leak-off and feed pipes from tank. Disconnect wiring harness at multi-pin connectors and remove pin from Hydra-Shift lever link. Remove mounting bolts then lift tank off with instrument panel attached. Tank and panel can then be separated after removal. Replace tank in reverse order of removal.

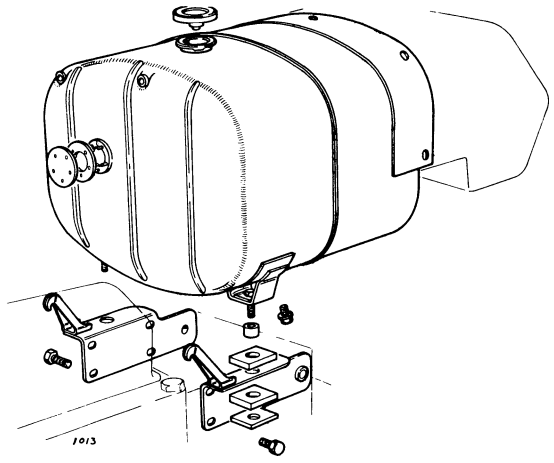

FIGURE A7. FUEL TANK REMOVAL

Fuel Injection Pump

First check that marks on pump body and carrier plate are aligned if any doubt exists, make new marks so that pump can be refitted in its original position. Drain cooling system and remove radiator outlet hose. Remove stop control and throttle rod complete with pump bracket. Remove turbocharger oil feed and drain pipes. Disconnect and remove injector pipes. Remove inspection plate from timing cover then unlock and remove nut from pump drive gear. Remove bolts attaching pump to carrier plate then use a small three-jaw extractor to draw gear from pump camshaft, so that pump can be withdrawn rearwards. Pump gear will remain in case but ensure that it remains in correct mesh, otherwise pump timing will be altered.

Replace pump in reverse order of removal, ensuring that marks on pump and carrier plate are aligned, so that original pump timing is obtained. Fully tighten drive gear nut before locking with tabwasher

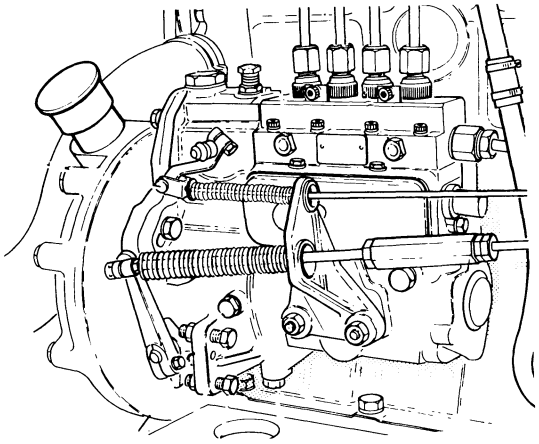

FIGURE A8. INJECTION PUMP

Timing Gears

After removing bonnet front and radiator, remove fan blades and fan belt. Remove crankshaft pulley—nut is right-hand thread—and timing cover to expose timing gears Before disturbing timing gears turn engine so that gear marks are aligned this will assist aligning marks when refitting gears Injection pump, power steering, pump and camshaft gears can be removed with suitable extractor—take special care when removing steering pump gear, do not strike extractor with a hammer or use a lever behind gear as this may cause the pump rotors to damage the softer bearings. Intermediate gear will slide off its shaft after removing bracket. Intermediate shaft can be pulled out of block and, if tight, remove plug from front end and screw a $\frac{5}{16}$ UNC bolt into shaft to assist extraction.

As the crankshaft gear cannot be removed without risk of being damaged, do not remove this gear unless it is to be renewed.

Do not turn crankshaft or camshaft unless gears are correctly meshed as damage could be caused by pistons fouling valve heads.

Reassemble gears in reverse order of removal. If intermediate shaft has been removed ensure that the grubscrews in both ends of shaft are secured with Loctite (Grade 270) and staked in position Fit shims between bracket and block to give inter gear 0 002 to 0 004 in (0 05 to 0 10 mm) end float. Ensure that markings on gears are correctly aligned and retaining bolts or nuts are fully tightened After replacing timing cover, loosely fit all bolts then use Service Tool K962560 to centralise cover with crankshaft before fully tightening cover bolts

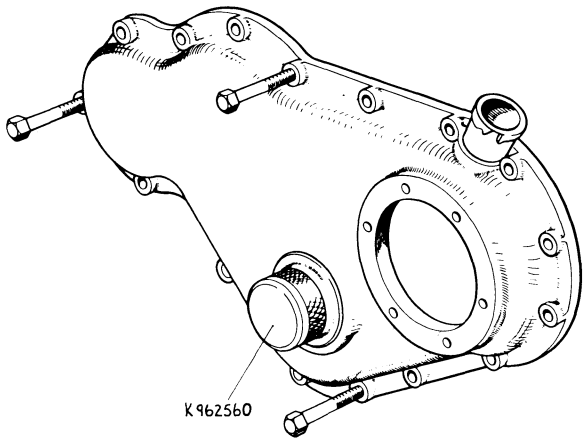

FIGURE A9 REFITTING TIMING CASE

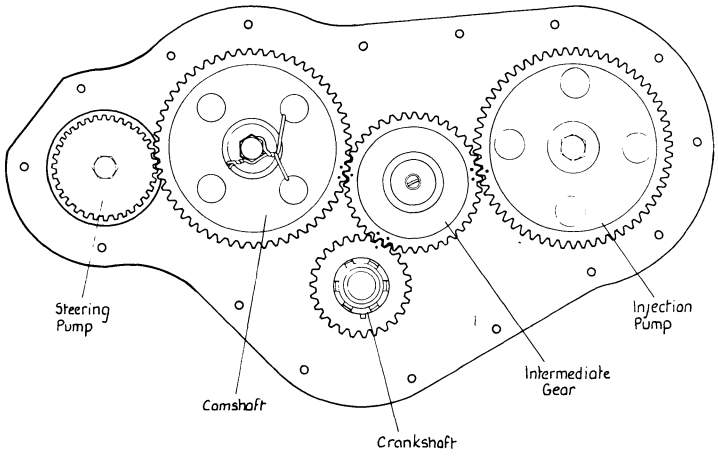

FIGURE A10 TIMING GEAR MARKINGS

Engine Camshaft

This can be removed with engine in situ. After removing radiator and timing cover, remove valve rocker cover and rocker shaft. Lift out push rods and remove the two push rod covers from right-hand side of cylinder block. Remove the two mounting bolts from fuel feed pump so that pump can be moved far enough to allow pump push rod to be removed from cylinder block.

Drain and remove engine sump. Disconnect pipe from oil pump then remove pump locating screw—this is lower of the two screws on right-hand side of cylinder block—so that pump can be removed.

Remove the three bolts from locating plate—these are behind camshaft gear but can be removed by turning engine to bring one of gear holes opposite a bolt. When bolts have been removed turn engine to bring camshaft and intermediate gear markings in line.

Hold valve tappets upwards, by jamming them with pieces of rubber or making some simple clips, then pull camshaft forwards out of cylinder block. Camshaft should not need forcing; if it cannot be pulled out easily this will be due to a valve tappet dropping and fouling against a shaft journal or cam lobe

Replace in reverse order of removal, ensuring that *all eight tappets are held in position and do not drop out* as shaft is being refitted. Align gear marks before meshing teeth and fitting locating plate bolts—plate holes are not symmetrical and plate will onlv fit in one position.

Cylinder Head

Drain cooling system Remove exhaust manifold complete with turbocharger Plug turbo oil holes, to prevent dirt reaching bearing Remove air cleaner, then rocker cover. Remove rocker shaft and push rods. Disconnect top hose and oil feed pipe then remove cylinder head bolts and nuts.

Replace cylinder head in reverse order of removal. Fit a new gasket, dry—no jointing compound—and tighten bolts in the correct order and in three stages Adjust valve clearances after fitting rocker shaft Prime turbo oil chamber with *clean* engine oil before connecting oil feed pipe.

Cylinder head bolts should be tightened and valve clearances checked (cold) after engine has run for approximately one hour

Tighten bolts and nuts in order shown and in four stages of 30, 60, 80 and finally 100 lb ft. (4, 8, 11 and 13.75 kg metre).

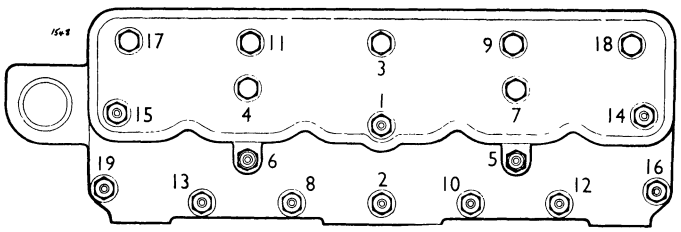

FIGURE A11. CYLINDER HEAD TIGHTENING SEQUENCE

Pistons and Connecting Rods

With cylinder head removed, drain oil and remove engine sump. Remove big-end bearing caps—taking care that these are identified so that they can be refitted in same position —then remove bolts and push pistons out of cylinder bores. Pistons must be refitted in their original bore and the original way round. The bearing shells—if not renewed—and bearing caps must also be refitted in their original position. Oil the bores, space out the ring gaps and after compressing rings with a suitable compressor push piston down into the bore. Fit bearing shells—smeared with oil—replace caps, bolts and nuts. If nuts can be screwed fully on with the fingers the self-locking ring is not effective and nuts should be renewed. Tighten the nuts evenly, to the correct torque.

Crankshaft

To remove crankshaft it is first necessary to remove the engine unit and then remove carrier plate, with injection pump attached. Remove main and big-end bearing caps—ensuring that these are marked for re-fitting in their original positions —then lift out crankshaft.

When refitting crankshaft, ensure that all bearings and journals are clean and smeared with oil if original bearings are being replaced these must be fitted in their original positions.

New bearing bolt lockwashers should be used and the surface washers fitted between lockwashers and bolt heads. Tighten bolts evenly to the correct torque.

When refitting clutch assembly use pilot shaft to centralise drive plates before bolting clutch to flywheel (Fig. B3).

Engine Unit

Before the engine unit can be lifted from the main frame it is necessary to separate the gearbox and clutch, and easiest way of doing this is to 'split' the tractor as for clutch removal (see page B2).

After 'splitting' tractor, so that clutch driveshaft is withdrawn from clutch, drain cooling system and remove both radiator hoses. Remove fan blade and stow this in radiator shroud. Remove pump driveshaft coupling from crankshaft pulley and remove rubber distance piece from driveshaft end. Remove valve rocker cover and, using two lifting nuts, attach engine lifting bracket to two of cylinder head studs. After removing bolts attaching cylinder block to frame—four of these are fitted upwards from underside of main frame—lift engine vertically out of frame: taking care not to damage the lubricating oil pump, which is some distance below cylinder block face.

Before refitting engine, ensure that main frame and cylinder block faces are clean. Fit new gaskets on main frame face and new rubber seals on main bearing caps. Take care not to damage oil pump when handling engine and fit two guide studs so that engine can be correctly positioned before being lowered on to main frame.

Turbocharger

The only maintenance requirements for a turbocharger are; ensuring an adequate supply of *clean* lubricating oil, an unrestricted supply of *clean* air and the rectification of any air or exhaust leaks. Any faulty gaskets must be renewed immediately as only a small amount of leakage will have an adverse effect on the operation of the turbocharger.

When a major engine overhaul is carried out the turbocharger should be stripped and cleaned (by a CAV agent), to ensure maximum life and performance.

If engine oil and filter element are renewed as recommended in the tractor instruction book and the engine lubricating oil pressure does not fall below 10 lb/in² (0 7kg/cm²) when idling, the turbocharger lubrication will be satisfactory.

If air cleaner is allowed to become choked, the turbocharger will be unable to supply the engine with an adequate supply of air, resulting in loss of power, excessive exhaust smoke and the possibility of oil leakage from the turbocharger.

The air cleaner therefore incorporates a warning device to indicate when the cleaner element is choked. To check filter condition, press button on restriction indicator 'in' with engine running at idling speed then gradually increase speed. If indicator shows red, the element is choked and requires servicing.

Air leakage between turbocharger and engine cylinders will also result in loss of power. The manifold and connecting pipe must, therefore be airtight and any leakage rectified immediately. If loss of power is experienced and the air cleaner indicator does not show a choked filter, first ensure that this is not caused by leaking manifold gaskets or air pipe connections.

Loss of power, excess smoke and high fuel consumption are faults which are often wrongly attributed to the turbocharger. It is worth remembering that the turbocharger is basically a simple device, consisting of two rotors on a common shaft and rotating in a plain bearing. If the turbocharger operates without excessive vibration or noise and there are *no air or exhaust leaks,* the usual engine and fuel injection equipment checks should be carried out as it is very doubtful if loss of engine performance is caused by a faulty turbocharger.

If it is definitely established that a turbocharger is faulty, and the easiest way of doing this is by substitution, no attempt should be made to dismantle it but the unit should be removed and forwarded to a CAV agent for stripping and examination.

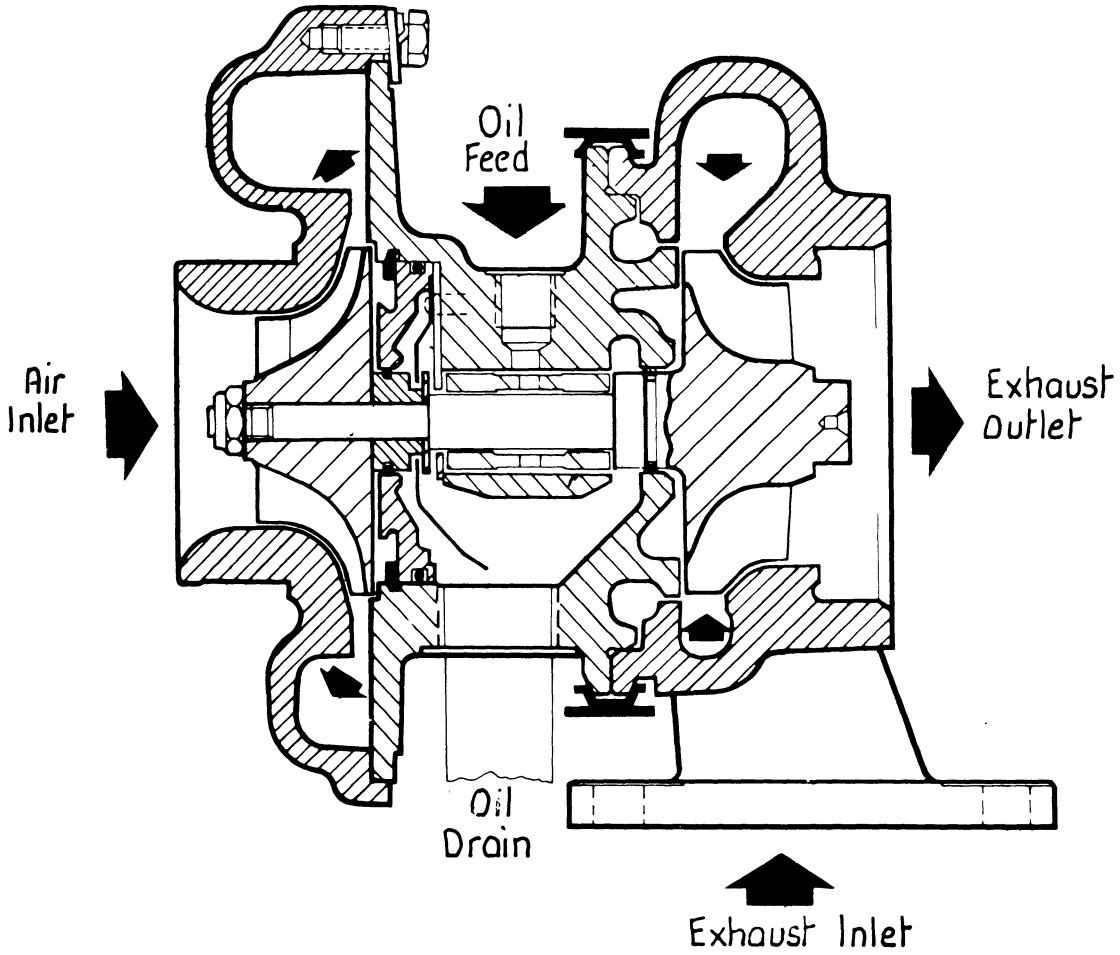

FIGURE A12. TURBOCHARGER

Water Pump

To dismantle pump, remove backplate and press pulley off shaft to expose locating screw. Remove bearing locating screw then, whilst supporting pump body, press shaft and bearing forwards out of body and impeller. Gland seal is fitted in body and can be pushed out rearwards after removing impeller.

Examine bearing and renew if it shows any signs of roughness or excessive play. Always fit a new gland seal.

To assemble pump, press bearing into body until locating holes are in line then fit locating screw and lock with tab-washer. Whilst supporting impeller end of shaft, press pulley on shaft until shaft end is level with edge of pulley bore. Turn pump over and f t new gland seal into pump body. Smear gland face with anti-scuffing paste before pressing impeller on to shaft. Press impeller on shaft until blades are 0.005in (0.01mm) clear of pump body, and support shaft on a $\frac{3}{4}$in (20mm) diameter distance piece, so that pulley is not pushed further on to shaft. Check that pump can be turned by hand and gland seal has a slight drag, then refit backplate, using a new gasket.

Fuel Injection Pump

The only maintenance required on the injection pump is maintaining sufficient clean, undiluted engine oil in the pump cam box. The oil should be drained and refilled to the level plug with clean engine oil every 125 hours.

Fuel Injection Pump Timing

When refitting an injection pump it is most important that it is correctly timed so that the injection, or 'spill' point occurs at the correct crankshaft position.

To obtain the correct timing, the scribe mark on the injection pump flange must be aligned with the scribe mark on the engine carrier plate The pump flange is slotted to allow pump body to be turned to bring marks into alignment.

If it is suspected that the timing obtained by this simple method is incorrect or if either of the scribe marks are obliterated it will be necessary to carry out a more basic check on the pump 'spill timing'.

Reconditioned Injectors

Undertake the following tests before installation of reconditioned injectors with BDLL 140S 6592 nozzles.

1. Pressure Test

Adjust injector springs to the correct breaking pressure:
New springs : 190 Ats, 196 kg/cm^2, 2793 lb/in^2
Used springs: 180 Ats, 186 kg/cm^2; 2646 lb/in^2

2. Back Leakage Test

Time the "leak past" between needle and nozzle bore (with dry tip) from 150 to 100 Ats (154 to 104 kg/cm^2; 2205 to 1470 lb/in^2). This must be between 5 and 15 seconds. Injectors with a slower "leak rate" (e g. 15 to 25 seconds) would be subject to sticking causing intermittent black smoke and power loss.

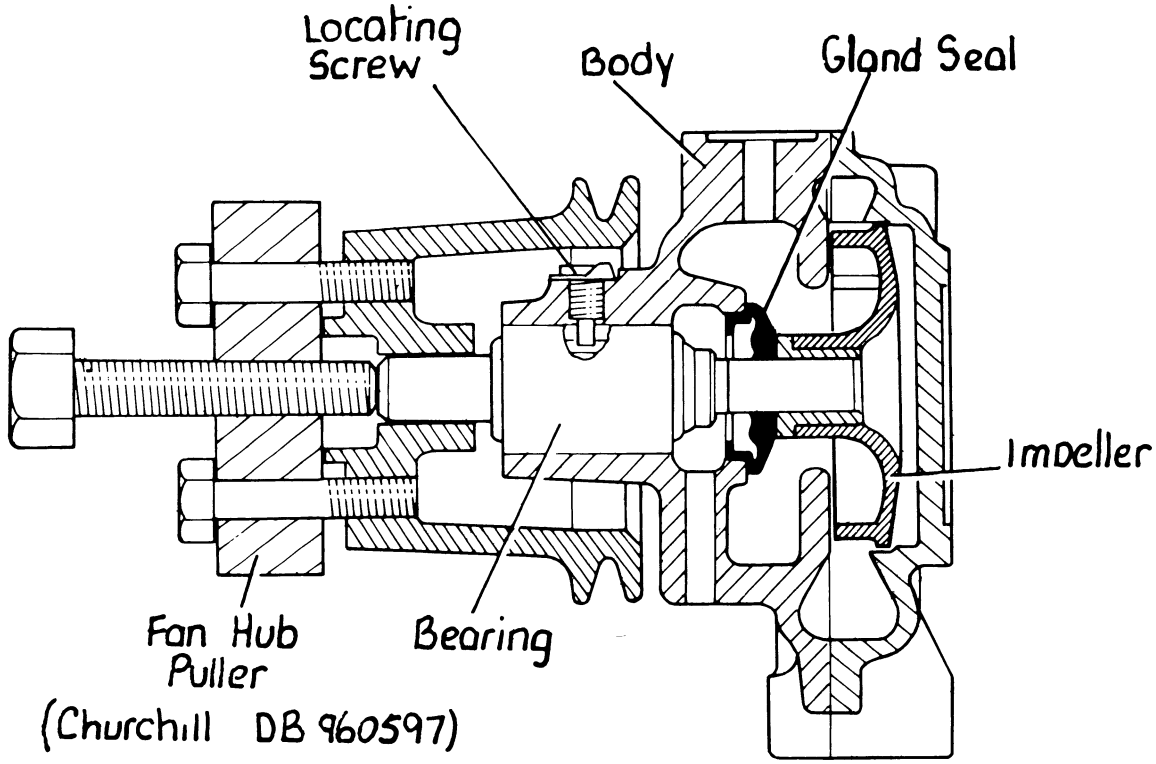

FIGURE A13 WATER PUMP

Checking Pump Spill Timing

To spill time a pump to an engine it is necessary to:

1. Fit a capillary tube to number one injector pipe outlet, so that pump spill point can be observed.

2. Locate exact position of crankshaft when pump reaches its spill point. This can be done in two different ways:

   (a) Inserting a timing peg through 'SP' hole in clutch housing to locate in flywheel dimple.
   (b) Measuring piston movement—which is directly related to crankshaft position—by lowering an inlet valve on to piston and using a dial gauge to measure valve movement.

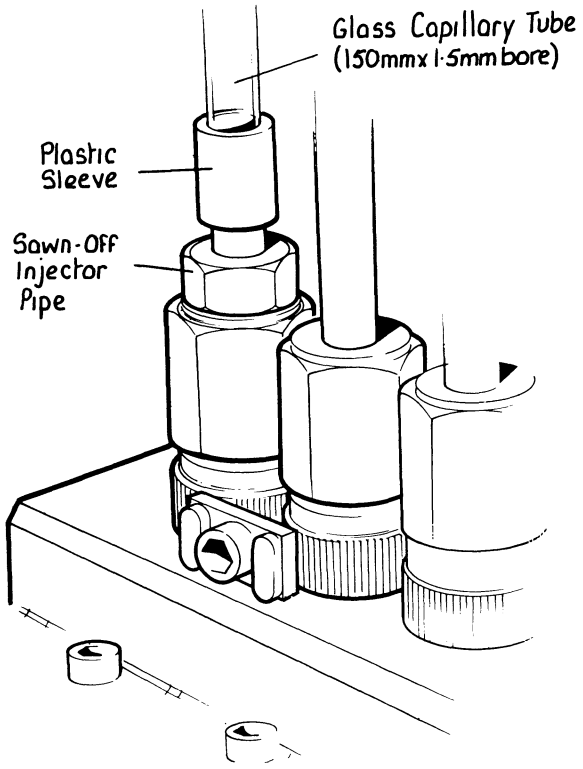

FIGURE A14 PUMP CAPILLARY TUBE

Spill Timing (Timing peg method)

1. Move pump into fully retarded position (release mounting nuts then pull top of pump away from cylinder block).

2. Remove injectors, blanking open end of leak-off pipe. Place stop control in run position and throttle control in maximum speed position. Install capillary tube on to No. 1 injection port outlet.
   Bleed fuel system *thoroughly.* It will be necessary to rotate engine with starter motor to bleed the high pressure galleries in the injection pump.

3. Slacken the capillary tube union nut with one finger over the end of the tube. Allow fuel level to drop but still remain visible. Tighten union nut and remove finger from tube. Rotate engine in normal direction of rotation and check that there is now a fuel column with an air bubble visible in the tube (if not, repeat this operation to introduce an air bubble).

4. Rotate engine manually in *normal direction of rotation* until the timing rod, inserted through the 'SP' hole in the flywheel cover, engages with the flywheel timing drilling on No. 1 compression stroke.

5. Prime the fuel lift pump to ensure an adequate flow of fuel to the injection pump. Rotate pump body slowly towards the advanced position (top of pump towards block) until the column of fuel in the capillary tube *JUST commences to rise* then tighten nuts attaching pump to timing case.

6. CHECK as follows—Prime fuel lift pump by hand, rotate engine manually in *normal direction of rotation* $1\frac{3}{4}$ crankshaft revolutions. Continue to rotate slowly, applying hand pressure on timing rod and note that the column of fuel must *JUST commence to rise* when the rod drops into the flywheel drilling.
   Adjust if necessary and recheck until correct.

7. REMOVE TIMING ROD FROM FLYWHEEL HOUSING. File off the timing mark on pump and scribe a new line to coincide with the mark on timing case.

Spill Timing (Dial gauge method)

1. Move the pump into the fully retarded position (release mounting nuts) then pull top of pump away from cylinder block as far as slotted holes will allow.

2. Remove injectors, blank open end of injector leak-off pipe Place stop control in run position and throttle control in maximum speed position. Install capillary tube on to No. 1 injection port outlet
   Bleed fuel system *thoroughly* It will be necessary to rotate engine with starter motor to bleed the high pressure galleries in the injection pump.

3. Slacken the capillary tube union nut with one finger over the end of the tube. Allow fuel level to drop but still remain visible. Tighten union nut and remove finger from tube. Rotate engine in normal direction of rotation and check that there is now a fuel column with an air bubble visible in the tube (if not, repeat this operation to introduce an air bubble).

4. Remove bonnet top and valve rocker cover.

5. Turn engine until number four inlet valve commences to open (number one piston will then be at top of a compression stroke).

6. Release and unscrew adjusting screw on number one inlet valve rocker so that valve push rod can be removed.

7. Remove cotters, cup and spring from number one inlet valve. This can be done by placing a suitable socket on valve cup and giving it a sharp tap with a hammer—piston will hold valve upwards. Fit a small 'O' ring in the valve stem groove, to prevent valve accidentally dropping into cylinder.

8. Mount a dial gauge on cylinder head so that vertical movement of number one inlet valve (which is now resting on piston top) can be measured.

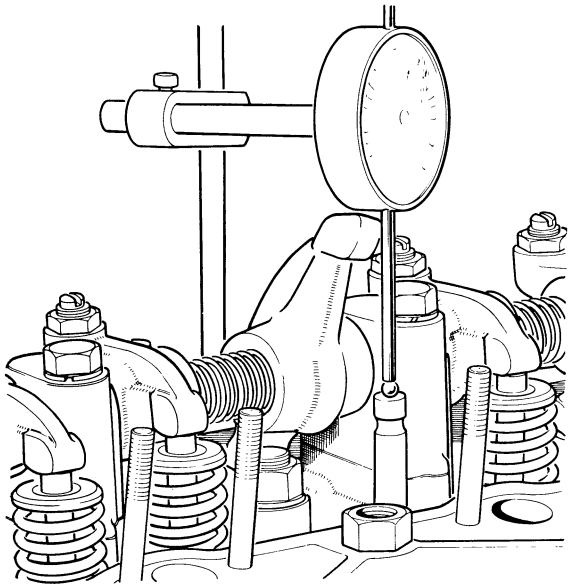

MEASURING VALVE MOVEMENT WITH DIAL GAUGE

9. Rotate engine slowly backwards and forwards, whilst applying a slight pressure to ensure valve is held down against piston, until T D C position of piston has been found and dial gauge set to zero at this position.

10. Rotate engine, in an anti-clockwise direction until piston is 0.50in (12 7mm) from T.D.C.—if piston is moved further then this inlet valve will have to be secured to prevent it falling into cylinder. An 'O' ring fitted on stem could be used.

11. Rotate engine manually in *normal direction of rotation* until dial gauge shows that piston is 0.1565in (3 975mm) before T D.C (this is equal to 19 degrees before T D C.) Prime fuel lift pump to ensure an adequate flow of fuel to the injection pump Rotate pump body slowly towards the advanced position (top of pump towards block) until the column of fuel in capillary tube *JUST commences to rise* then tighten nuts attaching pump to timing case

12. Check by turning engine backwards until piston is 0 50in (12.7mm) before T D.C then prime lift pump by hand and rotate engine slowly in its normal direction of rotation. Immediately the column of fuel in capillary tube commences to rise check piston position by noting the dial gauge reading. This should be *0 1565in (3.975mm) before T D C. and if not,* release pump mounting bolts and turn pump body. Clockwise (direction of engine rotation) to retard and anti-clockwise (opposite to engine rotation) to advance, then recheck.

13. When timing is correct, remove capillary tube and replace injectors. Set piston to T.D.C. to hold valve upwards, then replace valve spring cup and cotters. Refit push rod and set valve clearance. Replace valve rocker cover and bonnet top.

Cylinder Head

The cylinder head and valve gear are of orthodox construction and the usual servicing procedures apply. The valve seats are shrunk in and then secured by 'staking', at four equally spaced places, with a $\frac{1}{16}$in (1.2 mm) square-ended punch.

Note that for the 'staking' to be effective the inserts must be recessed 0.005 - 0.010in (0.13 - 0.25mm) below the cylinder head face.

The exhaust valves are of special material to withstand the higher operating temperatures and are *not* therefore interchangeable with the inlet valves K928622. Exhaust valve K950100 can be identified by the hemispherical indentation at centre of valve head.

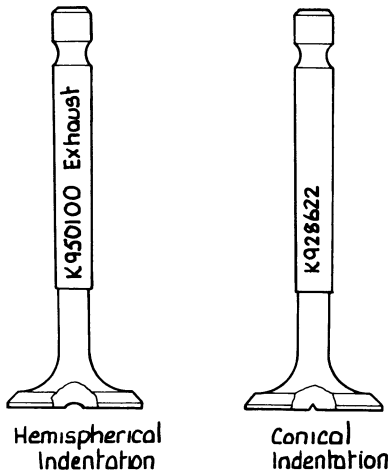

FIGURE A16. IDENTIFICATION OF VALVES

Pistons and Rings

The top compression ring has a chrome insert and all three compression rings are taper faced: rings must therefore be fitted so that the word 'TOP' stamped on each ring is towards the piston crown.

As the pistons have a larger combustion chamber (16:1—compression ratio) and a cast-iron insert for the top ring they are not interchangeable with 1212 pistons.

If the piston skirt marking is uneven, check connecting rods for alignment. Renew any faulty rods, do not attempt to straighten a distorted connecting rod.

Crankshaft and Bearings

Once they have run against a journal, bearing shells are not interchangeable and, if not renewed, must only be refitted in their original position. Bearing caps and shells are very accurately machined and no attempt should be made to file a bearing cap or scrape a bearing. Connecting-rod caps must only be used with their original connecting rod and main bearing caps must only be fitted to their original cylinder blocks.

Crankshaft rear bearing is sealed by an oil retainer bolted to both cap and block. Retainer is in two halves and fitted with asbestos packings which make positive contact with crankshaft. Worn or damaged packings should be renewed. Remove old packings and clean out retainer grooves. Smear one of packings with adhesive, to prevent it turning during service, then press packings carefully into retainer grooves. Roll packings into position with a smooth bar then trim ends so that they protrude 0.030in (0.76mm) above retainer face and press corners into a chamfer, so that they will not spread out between retainer faces. Clamp retainer on to a 2.620in (66.5mm) diameter mandrel to press packings into position and check that halves of retainer seat squarely together.

To ensure that there is no possibility of oil leakage between the two halves of the retainer, or between the retainer and cylinder block, refit the retainer as follows.

1. Polish crankshaft, with worn 320 grade emery cloth, to a highly polished finish.

2. Trim each half gasket so that edges will touch but not overlap. Smear retainer faces with a medium texture non-hardening jointing compound.

3. Do not fit spring washers on socket screws or setscrews, but fit copper washers and tighten in the following order:

   (a) Tighten socket screws then unscrew half-a-turn.

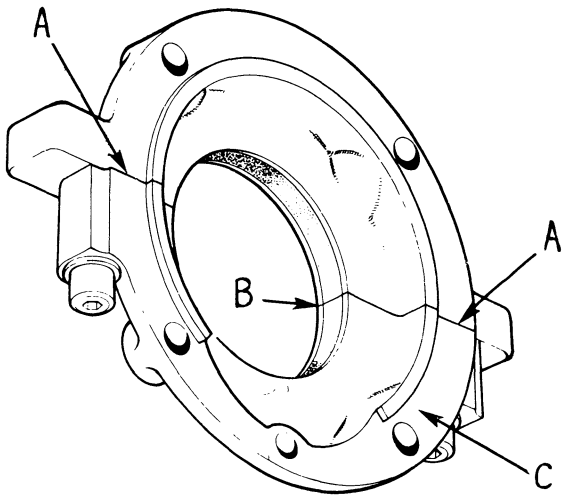

FIGURE A17. CRANKSHAFT REAR OIL SEAL

A Check that Allen screws have sufficient clearance to permit both halves to be in line

B Ensure that ends of packings do not cause gap between halves of retainer.

C Check mounting face for distortion and if necessary correct by filing

   (b) Tighten setscrews then firmly tighten socket screws.

   (c) Unscrew all setscrews half-a-turn then retighten evenly and firmly.

   (d) Ensure that crankcase breather is clear.

   (e) Check that crankshaft and float is not excessive, this should be not more than 0 010in (0 25mm).

SPECIFICATIONS AND DATA—ENGINE

Tightening Torques	lb ft	Kg metre
Big-end bearing nuts	50	6.92
Breather cover nut	10	1.38
Camshaft gear bolt	40	5.53
Camshaft locating plate bolts	25	3.46
Carrier plate to cylinder block bolts	25	3.46
Clutch housing to main frame bolts	75	10.5
Clutch housing to starter support bolts	30	4.15
Crankshaft pulley nut	140	19.3
Cylinder block to main frame bolts	30	4.15
Cylinder head nuts and bolts	90	12.4
Cylinder head studs into cylinder block	25	3.46
Fan blade bolts	25	3.46
Flywheel nuts	50	6.92
Injection pump drive gear nut	45	6.22
Intermediate timing gear bracket bolts	25	3.46
Main bearing cap bolts—Front	160	22.12
Main bearing cap bolts—Centre	280	38.6
Main bearing cap bolts—Rear	160	22.12
Main frame to engine bolts	30	4.15
Oil filter bowl bolt	10	1.38
Sump to main frame bolts	20	2.76
Valve rocker adjusting screw locknuts	14	1.94
Turbocharger		
Turbine shaft locknut	13	1.8
Compressor housing bolts	5	0.7
Locknut-turbine housing 'V' clamp	10	1.4

The following figures apply to bolts of standard material with either UNC or UNF threads and may be used for all nuts and bolts not listed in the previous table.

Thread diameter (in)	lb ft	kg metre
$\frac{1}{4}$	7	0.97
$\frac{5}{16}$	15	2.07
$\frac{3}{8}$	25	3.46
$\frac{7}{16}$	45	6.22
$\frac{1}{2}$	65	8.98
$\frac{5}{8}$	110	15.2
$\frac{3}{4}$	140	19.3

Capacities	Imperial	U.S.	Metric
Cooling system	24 pints	14½ qt	13.7 litre
Engine lubricating oil	13 pints	8 qt	7.4 litre
Steering reservoir (refill)	2½ pints	1½ qt	1.4 litre
Steering system (initial)	4¼ pints	2½ qt	2.4 litre
Fuel tank	18 gal	21½ gal	81.8 litre
Transmission (refill)	9¼ gal	11 gal	42.0 litre
Transmission (initial)	10½ gal	12½ gal	47.7 litre
Reduction units (per side)	13 pints	8 qt	7.4 litre

	Inches		Millimetres	
Cylinder Block	*Max*	*Min*	*Max*	*Min*
Cylinder bores : standard	3.9396	3.9388	100.066	100.046
,, ,, + 0.020in	3.9596	3.9588	100.573	100.554
,, ,, + 0.040in	3.9796	3.9788	101.081	101.062
,, ,, : surface finish (honed)	20 to 40 micro inch C.L.A.			
Main bearing bore dia, in block	2.792	2.791	70.916	70.891
Centre main bearing width	1.686	1.684	42.824	42.774
Core plug aperture diameter	1.760	1.755	44.70	44.58
Intermediate timing gear shaft dia	1.001	1.0005	25.425	25.413
Intermediate gear shaft press fit into block	0.0012	0.0002	0.030	0.006
Camshaft				
Journal diameter — front	1.872	1.8707	47.548	47.516
,, ,, — intermediate	1.827	1.825	46.405	46.355
,, ,, — centre	1.8113	1.8100	46.007	45.974
,, ,, — intermediate	1.765	1.763	44.831	44.780
,, ,, — rear	1.7488	1.7475	44.419	44.387
Bearing clearance— front, centre and rear	0.0035	0.0015	0.088	0.039
,, ,, — front intermediate	0.019	0.012	0.482	0.305
,, ,, — rear intermediate	0.017	0.010	0.432	0.254
Inlet cam overall diameter	1.450	(nom)	36.830	(nom)
Inlet cam lift	0.290	,,	7.366	,,
Exhaust cam overall diameter	1.410	,,	35,814	,,
Exhaust cam lift	0.250	,,	6.350	,,
End float—camshaft	0.020	0.010	0.508	0.254
Lubricating Oil Pump				
Spindle length	$15\frac{3}{8}$	(nom)	390.5	(nom)
Bracket length	$10\frac{5}{16}$	,,	262	,,
Housing depth	$1\frac{3}{8}$	,,	34.9	,,
Spindle bush bore (installed)	0.4925	0.4905	12.509	12.459
Spindle clearance	0.003	0.0005	0.076	0.013
Rotor width	1.374	1.373	34.899	34.875
Rotor end float	0.0035	0.001	0.088	0.026
Rotor teeth backlash	0.026	0.020	0.66	0.51
Oil pressure (engine hot)				
At 1800 rev/min (lb/in^2)	55	45		
,, ,, ,, (kg/cm^2)	—	—	3.8	3.1
At 700 rev/min (lb/in^2)	—	30		2.1
,, ,, ,, (kg/cm^2)	—	—		
Filter by-pass valve setting (back press lb/in^2)	20	15		
,, ,, ,, ,, ,, ,, kg/cm^2)			1.4	1.1
Oil warning switch pressure setting (lb/in^2)	13	9		
,, ,, ,, ,, ,, (kg/cm^2)			0.9	0.6

	Inches		Millimetres	
Pistons & Piston Rings	*Max*	*Min*	*Max*	*Min*
Piston skirt diameter-measured $\frac{1}{4}$in above, or below, scraper ring groove and at 90 to gudgeon pin axis	3.932	(nom)	99.87	(nom)
Piston skirt avality	0.006	,,	0.15	,,
Piston ring groove width—compression	0.097	0.096	2.463	2.438
,, ,, ,, ,, scraper	0.190	0.189	4.826	4.801
Piston ring width—compression	0.0937	0.0928	2.379	2.358
,, ,, ,, scraper	0.1875	0.1865	4.762	4.737
Piston ring gap—new (all rings)	0.016	0.011	0.40	0.28
Piston ring clearance in groove—compression	0.004	0.002	0.102	0.051
,, ,, ,, ,, scraper	0.0035	0.0015	0.089	0.038
Piston height-gudgeon pin axis to top of crown	2.375	(nom)	60.3	(nom)
Valve recess diameter in piston crown	1.580	,,	40.1	,,
Valve recess depth in piston crown	0.218	,,	5.54	,,
Combustion chamber diameter	$2\frac{5}{16}$	,,	58.7	,,
Gudgeon pin diameter	1.2500	1.2498	31.75	31.745
Connecting Rods				
Length-centre small end to centre big end	7.875	(nom)	200.0	(nom)
Width	1.492	1.490	37.89	37.846
Diameter, small end—bush removed	1.4382	1.4372	36.53	36.505
,, ,, ,, bush fitted and reamed	1 2515	1.2505	31.788	31.763
Clearance, small end bush to gudgeon pin	0 0017	0.0005	0.431	0.013
Diameter, big end-bearings removed	2 6455	2 6445	67.195	67.171
Alignment, max. out of parallel or twist per inch of checking mandrel length	0 0005	—	—	—
Per 100mm of checking mandrel length	—	—	0.05	—
Crankshaft				
Identification stamped on front end of shaft	55T			
Main bearing journal diameter Standard	2 6245	2 6240	66.662	66.650
,, ,, ,, ,, 0 010in	2 6145	2 6140	66.408	66.396
,, ,, ,, ,, 0 020in	2 6045	2 6040	66.154	66.142
Thrust face width Standard	1 876	1 874	47.650	47.600
,, ,, ,, —0.010in	1 886	1 884	47.904	47.854
,, ,, ,, —0 040in	1 916	1 914	48.666	48.616
Big end journal diameter Standard	2 4985	2 4980	63.461	63.450
,, ,, ,, ,, · 0 010in	2.4885	2 4880	63.207	63.196
,, ,, ,, ,, · 0 020in	2 4785	2 4780	62.953	62.942
Big end journal width	1 5015	1.4995	38.13	38.09
Fillet radii—all journals	0 160	0 150	4.06	3.81
Alignment Max dial gauge reading, when placed against centre journal	0 004	—	0.10	—
Journal finish—max CLA reading	10 micro inch			
Diameter of rear journal oil seal land	2 624	2 619	66.649	66.523
Bearing thickness (standard) — mains	0.082	(nom)	2.08	(nom)
,, ,, ,, — big ends	0.072	,,	1.83	,,
,, ,, ,, — thrust washers	0.092	,,	2.34	,,
Bearing width—mains	1 50	,,	38.100	,,
,, ,, —big ends	1 15	,,	29.210	,,
Bearing clearance—mains	0 004	0 002	0.102	0.051
,, ,, —big ends	0 004	0 002	0.102	0.051
End float—centre main bearing	0.010	0 002	0.254	0.051
Side clearance—big end bearings	0.0115	0.0075	0.292	0.191

Valve Mechanism	Inches		Millimetres	
	Max	*Min*	*Max*	*Min*
Valve head diameter (inlet and exhaust)	1.5	(nom)	38	(nom)
Valve seat angle ,, ,,	45		45	
Valve length—overall (inlet and exhaust)	0.890	(nom)	124.0	(nom)
Valve stem diameter ,, ,, ,,	0.3732	0.3722	9.479	9.451
Valve guide bore ,, ,, ,,	0.3755	0.3745	9.537	9.512
Valve guide clearance ,, ,, ,,	0.0033	0.0013	0.0838	0.033
Seat insert diameter ,, ,, ,,	1.631	1.630	41.427	41.02
Seat insert thickness (inlet)*	0.160	0.155	4.064	4.038
,, ,, ,, (exhaust)*	0.150	0.148	3.810	3.760
Insert seat angle		45		45
Insert seat width	0.055	0.045	1.397	1.143
Insert counterbore diameter in cylinder head	1.626	1.625	40.792	40.767
Insert counterbore depth in cylinder head*	0.159	0.156	4.038	3.962
Inserts shrunk in with "Drikold" then cylinder head face ground*				
Secure all inserts with four indentations spaced 90 apart	$\frac{1}{16}$ x $\frac{1}{16}$		1.60 x 1.60	
**See text under 'Cylinder Head'.*				
Valve tappet diameter	0.624	0.623	15.825	15 649
Valve tappet clearance in cylinder block	0 003	0.001	0.076	0.026

Water Pump

Bearing bore diameter in housing	1.1808	1.1798	29 992	29 967
Clearance — impeller to body	0 005	(nom)	0.13	(nom)
Thermostat — starts opening	181 F	174 F	83 C	79 C
,, — fully open	205 F	199 F	96 C	93 C

Fuel Injection Pump

Maximum fuel setting—Injection pump P5169AS. (Temporary data, subject to amendment.)

Use CAV test sheet P5169 Issue 2, but set maximum fuel to 18 0ccs MAX per 200 shots at 800 pump rev/min, on a Hartridge 800 or 1100 test machine.

Injectors—Use only CAV injectors, part number 5253807 with BDLL 140S 6592F nozzles. If these are not available select reconditioned injectors with BDLL 140S 6592 nozzles and ensure the following test figures are complied with.

Pressure test—Adjust springs to give breaking pressure of 190 Ats (196 kg/cm²) (2793 lb/in²) with new springs or 180 Ats (186 kg/cm²) (2646 lb/in²) with used springs.

Back leakage test—Leak past between needle and nozzle bore (with drytip) from 150 to 100 Ats (154 to 104kg/cm²) (2205 to 1470 lb/in²) must be 5 to 15 seconds. Nozzles with a slower leak rate, e.g. 15 to 25 seconds, will be subject to sticking, causing intermittent black smoke and power loss.

HOW IT WORKS—DUAL CLUTCH

A dual clutch is two separate clutches assembled into a single unit but each fitted with its own release mechanism.

The clutch assembly is bolted to the engine flywheel and comprises a cast-iron cover plate which encloses two driven plates, two pressure plates, a set of thrust springs and two sets of release levers.

The two pressure plates are placed back-to-back between the driven plates, all four plates being positioned between clutch cover and flywheel. The thrust springs between the pressure plates have a double purpose: they clamp the PTO driven plate against the flywheel and also clamp the transmission driven plate against the inside of the clutch cover.

The transmission clutch release levers are connected to a foot pedal on left-hand side of the tractor and the PTO clutch release levers are connected to a hand lever at left-hand side of tractor seat.

When both clutches are engaged both driven plates are clamped tight by their respective pressure plates and transmit the drive to separate, concentric shafts.

When the clutch foot pedal is depressed, the release levers push the rear pressure plate forward, thus releasing the transmission driven plate and allowing it to come to rest.

When the hand clutch lever is operated the front pressure plate is drawn rearwards, thus releasing the PTO driven plate and allowing cardan shaft to come to rest.

The thrust springs between the pressure plates consist of 12 coil springs and a single, large Belleville washer. The Belleville washer augments the coil spring thrust and also provides an increasing thrust as the driven plates wear and the coil spring thrust starts reducing.

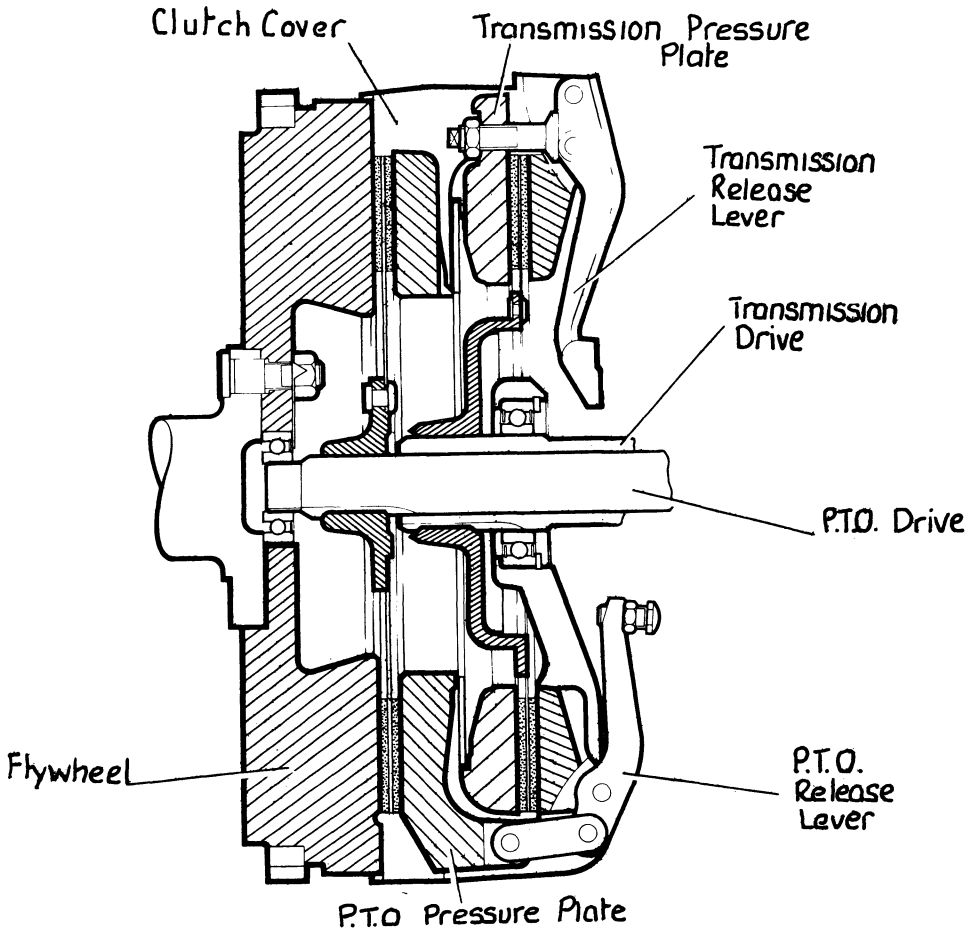

FIGURE B1. DUAL CLUTCH

UNIT REMOVAL AND REPLACEMENT

Clutch Assembly

As the clutch driveshaft is an integral part of the gearbox the clutch cannot be removed without first withdrawing the gearbox. Clutch removal is therefore best carried out by 'splitting' the tractor frame.

1. Remove silencer and bonnet top Disconnect battery earth lead. If fuel tank is full, drain off some fuel: a full tank is very heavy.

2. Lift front of cab—'Q' cab tractors Pub 9-38162, otherwise remove fuel tank complete with instrument panel.

3. Disconnect pipes from servo valve. Remove front tool box bracket and pivot throttle bracket rearwards Remove right-hand steering pipe: this is attached to underside of main frame with plate and 'O' ring.

4. Remove starter bolts, lift starter forward and allow it to rest in main frame.

5. Drain transmission oil into *clean* container—capacity approx. 9 gallons (40 litres). Disconnect pump inlet pipe, by releasing hose clips at filter end and pushing short rubber hose back on to pipe. Disconnect pump outlet pipe at union mid-way along pipe.

6. Disconnect hand and foot clutch controls, by removing adjusting nuts from rod ends. Remove clutch pit cover and disengage the transmission pull-off spring from hole in left-hand side of frame.

7. Remove power take-off unit and withdraw cardan shaft until it is clear of clutch.

8. Bolt support legs to rear end of front frame and adjust legs so that they take some weight but do not lift the frame. Support weight of rear main frame by means of a jack or crane, positioned just forward of the oil filter housing.

9 Remove bolts attaching clutch housing to engine and main frame, and also bolts attaching front and rear frames together Using a suitable punch, tap dowels (one at each side) back until they are clear of front frame.

10 Carefully lever the two halves of tractor apart, allowing PTO release lever fork to tilt rearwards until it is disengaged from bearing sleeve.

11. Having separated two halves of tractor, push front end forward to allow working room clutch is quite heavy to lift out of frame Remove bolts from PTO clutch fork and pull-off spring lever Remove circlip from right-hand end of cross shaft then pull shaft out from left, tapping release fork back at same time and taking care of the two keys Fit transit clips between forged release levers and clutch cover, then unscrew the six bolts into flywheel. Remove these bolts evenly and prepare to catch the driven plate which will drop out as clutch assembly is removed from flywheel

WARNING:- TRANSIT STAPLES MUST BE FITTED TO THE PTO RELEASE LEVERS BEFORE CLUTCH IS REMOVED FROM FLYWHEEL, TO PREVENT DISPLACEMENT OF BELLEVILLE SPRING DURING HANDLING

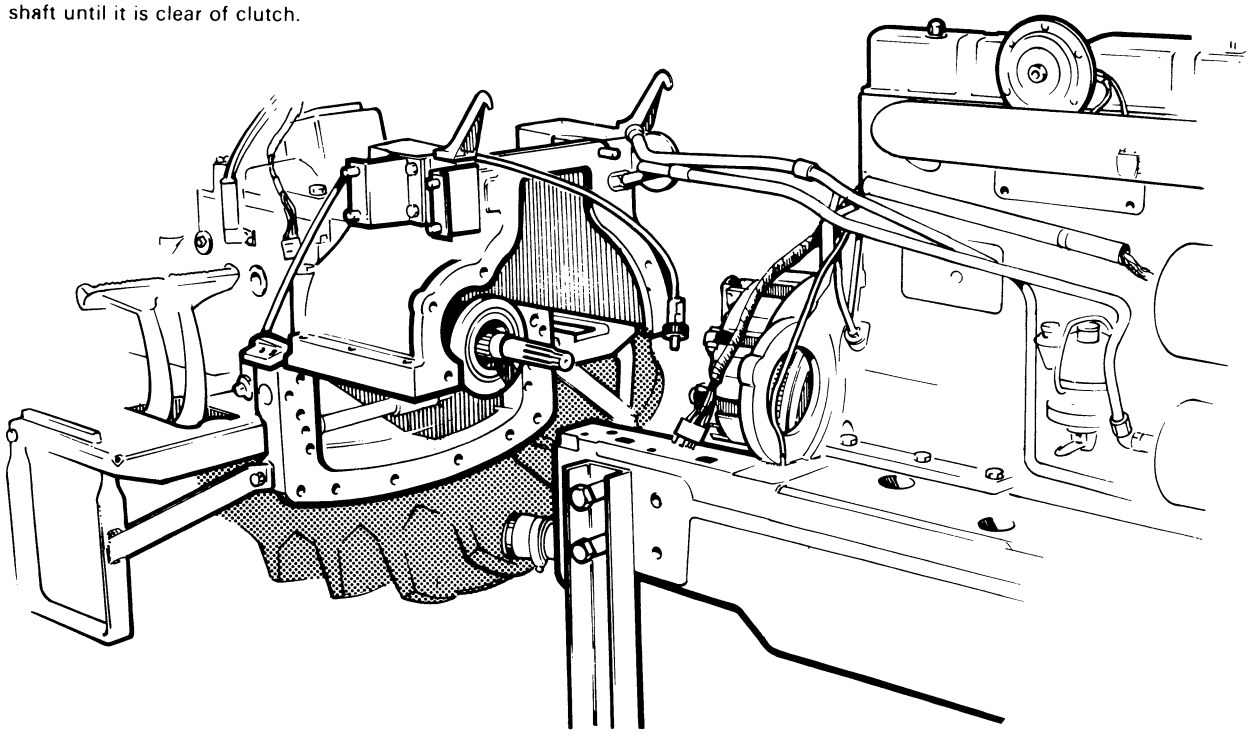

FIGURE B2 TRACTOR SPLIT FOR CLUTCH REMOVAL

Replace clutch unit in reverse order of removal.

1. Fit pilot shaft through clutch assembly, long boss on PTO plate towards flywheel, to hold driven plates central then bolt clutch to flywheel. Tighten bolts evenly and when bolts are fully tightened, withdraw pilot *and transit clips*

2. Slide cross shaft into frame. Replace release fork (offset towards clutch) and pull-off spring lever. Oil shaft bearings before pushing shaft home and fitting circlip. Replace keys in shaft before sliding fork into position and replacing bolts.

Clutch Release Bearings

When tractor is 'split' for clutch removal, both release bearings remain on the support snout and may be removed as follows:

1. Remove left-hand footplate or modify footplate by cutting at front as shown in figure B4.

2. Disconnect lubrication pipe from PTO bearing carrier and pull bearings forward off the support snout. The cut-away platform will allow cross-shaft lever to pivot far enough rearwards to disengage fork from bearing sleeve. Slide transmission bearing carrier out of PTO bearing carrier.

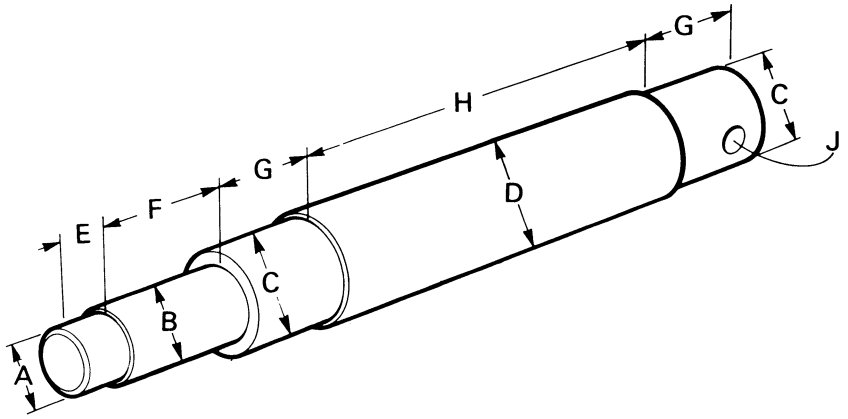

FIGURE B3. CLUTCH PLATE PILOT—1412 TRACTORS

A 0 874in (22 20mm)	*B 0.912in (23.16mm)*	*C 1.50in (38.19mm)*
D 1 769in (44.93mm)	*E $\frac{3}{4}$in (19.05mm)*	*F. 2$\frac{1}{4}$in (57.15mm)*
G 1$\frac{1}{2}$in (37.10mm)	*H* 6in *(152.4mm)*	*J. $\frac{3}{8}$in (9.5mm) dia. hole*

3 Screw a $\frac{1}{2}$ UNC x 5in long guide stud into each side of main frame and bring both halves of tractor together. Hold PTO cross shaft lever against its pull-off spring so that release fork is horizontal and will pass under release bearing Ensure that both halves of main frame are in-line and as soon as frames are close enough, engage PTO fork into bearing sleeve Turn engine, to align clutch plate splines and when gap between frames is closed, replace bolts and tap dowels into position Do not use force to pull the main frame together if frames are in correct alignment they can be pushed together quite easily.

4 Tighten frame bolts evenly then push cardan shaft into clutch and engage it with clutch plate splines Check that PTO fork is correctly engaged in bearing sleeve then reconnect and adjust clutch linkage

5 Engage transmission pull-off spring into hole in main frame This can be done by hooking a piece of strong cord through frame and on to hook A large screwdriver, or suitable lever, can then be used to pull the cord and stretch the spring, until the hook can be engaged in main frame hole.

6 Replace remaining components in reverse order of removal. Before refilling transmission with oil remove filter assembly. Wash screen and clean magnetic filter before replacing

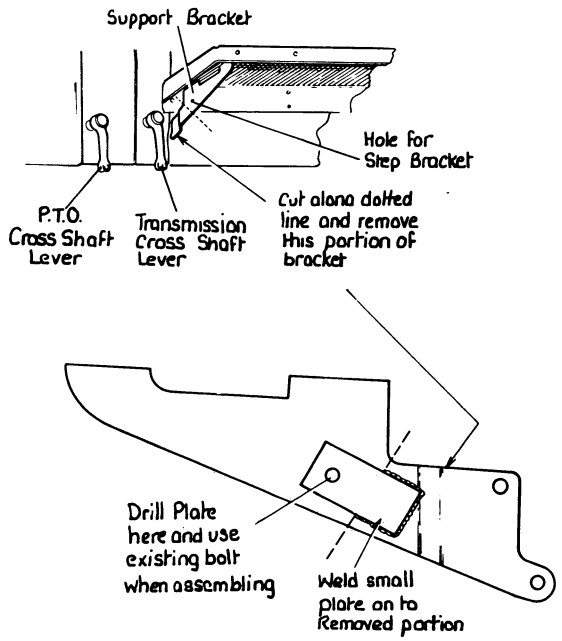

FIGURE B4. FOOTPLATE MODIFICATION

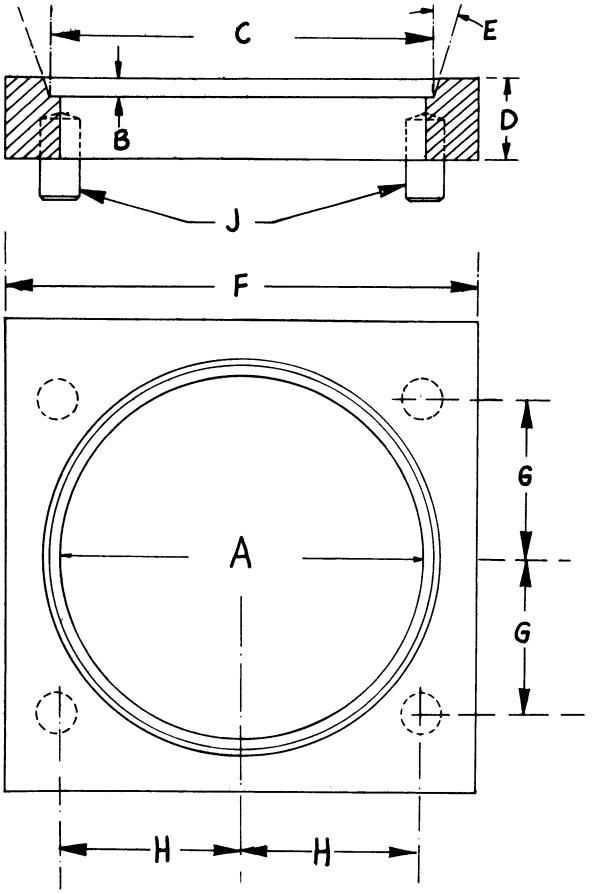

FIGURE B5.
BEARING HOUSING SUPPORT

A. 4.625in (116mm) Dia.
B. $\frac{1}{4}$in (6 35mm)
C. 4.937in (125mm) Dia.
D. 1in (25.4mm)
E. 7 degrees
F. 6in (152mm) Square
G. $2\frac{5}{16}$in (59mm) Centres
H. $\frac{1}{2}$in (12.5mm) Dowels

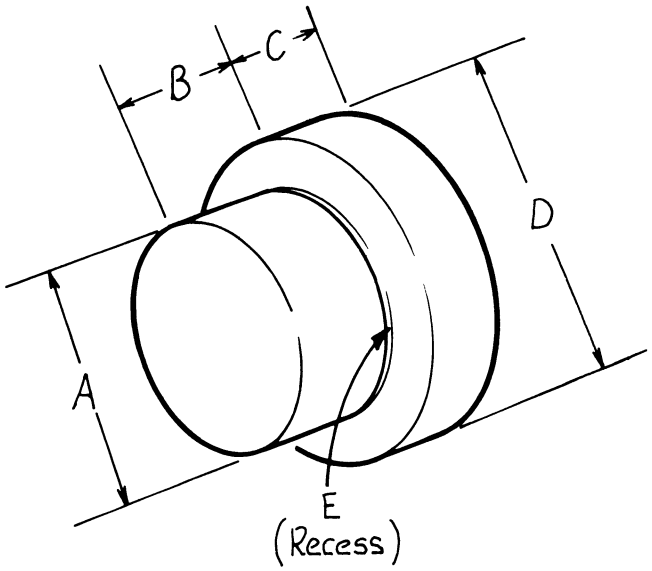

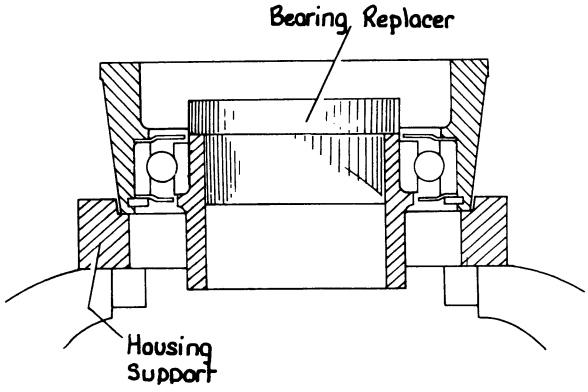

FIGURE B6. REMOVING PTO BEARING

FIGURE B7.
RELEASE BEARING REPLACER

Transmission

A. 2.124in (53.95mm)
B. 1.0in (25.4mm)
C. 0.5in (12.7mm)
D. 3.5in (89mm)
E. $\frac{1}{8}$ wide x $\frac{1}{32}$in deep (3.17 x 0.8mm)

Power take-off

A. 2.624in (66.649mm)
B. 1.0in (25.4mm)
C. 0.5in (12.7mm)
D. 2.98in (75.79mm)
E. $\frac{1}{32}$ wide x $\frac{1}{32}$ deep (0.8 x 0.8mm)

3. Transmission bearing is a light press fit on carrier and should be removed by supporting inner race of bearing and pressing carrier out.

4. PTO bearing is also a light press fit on its carrier sleeve and is secured inside its housing by a circlip.

The tools shown in figures B5 and B7 will facilitate removing and refitting bearings.

5. Re-assemble by lightly greasing bearing before pressing bearing into carrier. Place baffle with small internal diameter in bearing bore of thrust plate and lipped section outwards. Press bearing on to sleeve then fit thrust plate pressing against outer race Fit remaining baffle, dished section away from bearing, then replace circlip.

6 Press transmission thrust bearing on to sleeve, thrust face towards clutch end of sleeve Pack lubrication cavities in both carrier bores with grease and assemble PTO bearing carrier on to transmission carrier.

7 Replace both sleeves on to support snout. Reconnect PTO bearing lubrication pipe Ensure that operating forks are central on the sleeves and the fork pins are free to rotate and lubricated with anti-scuffing paste.

Clutch Cross Shafts

The PTO clutch cross shaft is retained in position by a circlip at right-hand side and may be removed after 'splitting' tractor, before removing clutch assembly from flywheel Transmission cross shaft can be removed, after 'splitting' tractor and removing the left-hand footplate. Shaft can then be withdrawn after removing retaining bolts from fork and pull-off spring lever.

Clutch Pedal

This is mounted on a tube which passes through the main frame. As this tube also carries the brake cross shaft, to remove the clutch pedal it is necessary to first remove the left-hand brake rod then remove left-hand operating lever this is pinned to cross shaft.

Disconnect clutch rod from pedal, by removing clevis pin then remove bolts attaching left-hand footplate to frame and fender Tilt front of footplate upwards to allow pedal to be removed from tube.

Replace in reverse order of removal, ensuring that pedal pivot is smeared with grease and brake operating lever is towards top of cross shaft.

Hand Ciutch Lever

This is attached to left-hand footplate and to remove lever, disconnect clutch rod from lower end of lever then remove the two side plates.

Remove bolts from lever pivot then lower lever through footplate it may be necessary to remove latch lever, this is secured with 'E' clips, to enable lever to be passed through footplate.

Before replacing lever, ensure that pivot shaft is quite free in lever bore and grease hole is clear.

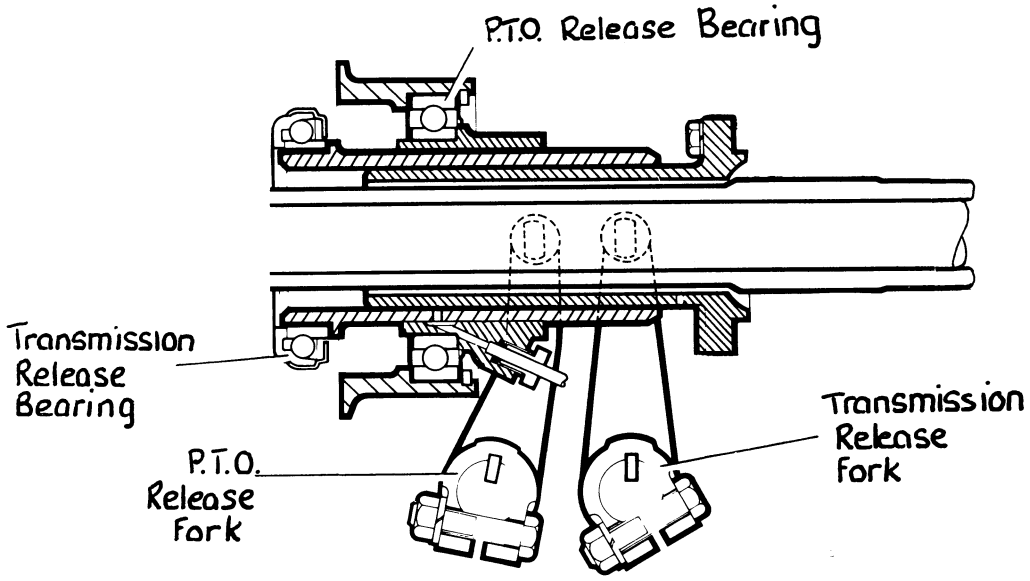

FIGURE B8 CLUTCH RELEASE BEARINGS

TOOLS REQUIRED FOR SERVICING CLUTCH UNIT

Clutch Kit No. 1 (Basic kit with baseplate modified as shown).

Clutch plate pilot. (Make to dimensions shown in figure B3).

Clutch Kit No. 8 (new kit, DB 8832, consisting of the following -)

Churchill Part Number	*Description*		*Quantity*
DB 8832/1	adaptor—centre pillar (transmission)		1
DB 8832/4	adaptor—centre pillar (PTO)		1
DB 8832/2	spacer—cover to baseplate		6
Code 33	spacer—PTO pressure plate		3
DB 8832/4	adaptor—centre pillar (PTO)		1
DB 8832/5	setscrew, $\frac{3}{8}$unc x $5\frac{3}{4}$in.		6
DB 8832/6	gauge finger—long		1
DB 990204	adaptor plate—actuator		1
DB 8832/12	locating collar—centre pillar		1
Code 4	spacer—centre pillar		1
86308	transit staple		3
189619A	wrench, $\frac{1}{4}$in square	transmission	1
	Allen key, $\frac{3}{16}$ A/F	adjusting screws	1

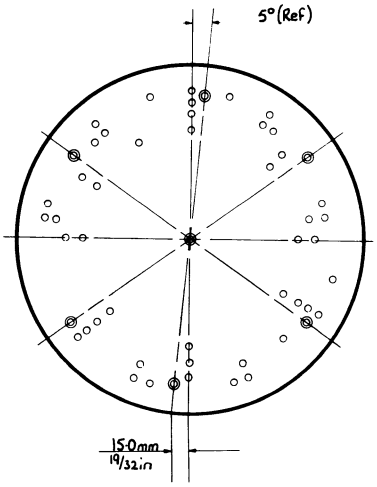

FIGURE B9. BASEPLATE MODIFICATION

Baseplate Modification

Existing Base Plate 912917 (Basic Kit) requires the addition of six new holes to accept the Laycock 12/12 clutch.

Note. This does not apply to any Base Plate manufactured after 1st May, 1974

This may be done either by careful marking out or by marking out one hole, mounting clutch on the PTO centre pillar with the bearing location collar in position and spot drilling through the clutch mounting holes in the cover.

Drill six holes, equally spaced on 13.244 - 13.256in (336.4 - 336 7mm) pitch circle diameter. Drill letter 'P', 0.322in (8.2mm). Tap $\frac{3}{8}$ UNC and countersink to 0.385in (9.8mm) at 90 included angle.

If spotting through cover, use $\frac{13}{32}$in (10.30mm) diameter drill.

The diagram shows the positioning of the new holes to ensure they do not break into any existing holes.

Maintenance

As the clutch facings wear during service the amount of free-play, or clearance, in pedal or hand lever is gradually reduced until no free play exists. This results in the pressure plate being unable to clamp the driven plate with sufficient pressure to prevent the clutch slipping and operating a tractor in this condition will rapidly cause total clutch failure. It is essential to maintain sufficient free-play in the linkage and adjustment is provided for this purpose.

Transmission Clutch Adjustment—Not 'Q' Cab

First pull pedal upwards, to ensure that it is being fully returned to the off position, then push pedal down lightly until it comes up against the resistance of the thrust springs. The difference between these two pedal positions is the amount of free play, or clearance, and this should be not less than 1in (25mm). Adjust, if necessary, by re-positioning adjusting nut on connecting rod. Unscrew nut to increase free play and tighten nut to reduce it.

If pedal can be pulled upwards the return spring is not fully returning the pedal, due to either a weak spring or tightness in linkage, and this must be rectified to prevent premature wear of the clutch release mechanism.

Power Take-off Clutch Adjustment—Not 'Q' Cab

First push hand lever forward, to ensure that it is being fully returned to the engaged position, then pull lever lightly back until it comes against the resistance of the thrust springs. The difference between these two positions is the free-play, or clearance and this should be not less than 2in (50mm). The best method of adjusting the free play is to pull lever fully rearward and engage latch. Remove cover from PTO shaft and put PTO in gear. Unscrew adjusting nut on lever rod until PTO shaft cannot be turned by hand, then tighten adjusting nut slowly until PTO shaft can just be turned by hand before tightening locknut. This will give just sufficient movement to disengage clutch and allow maximum amount of free-play in hand lever.

If lever can be pushed forward the return spring is not fully returning the lever to the engaged position, due to either a weak spring or tightness in linkage, and this must be rectified to prevent premature wear of the clutch release mechanism.

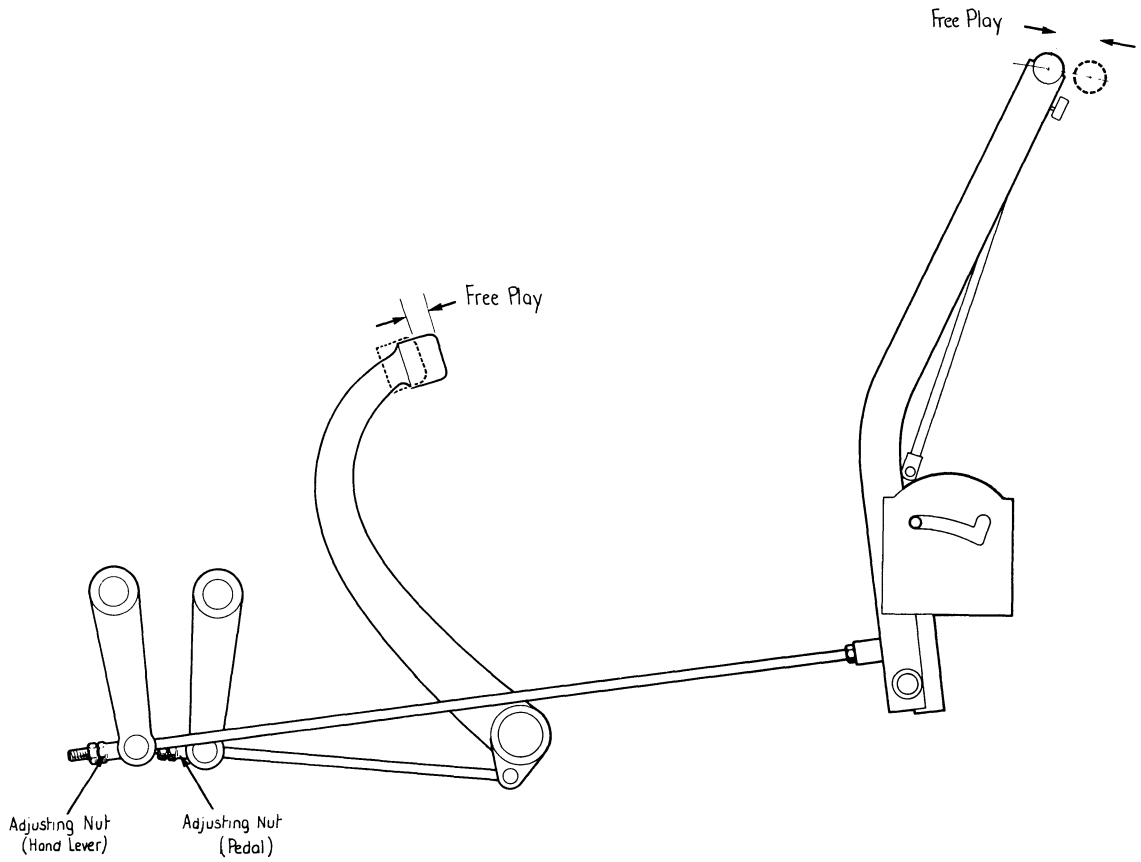

FIGURE B10. CLUTCH LINKAGE ADJUSTMENT

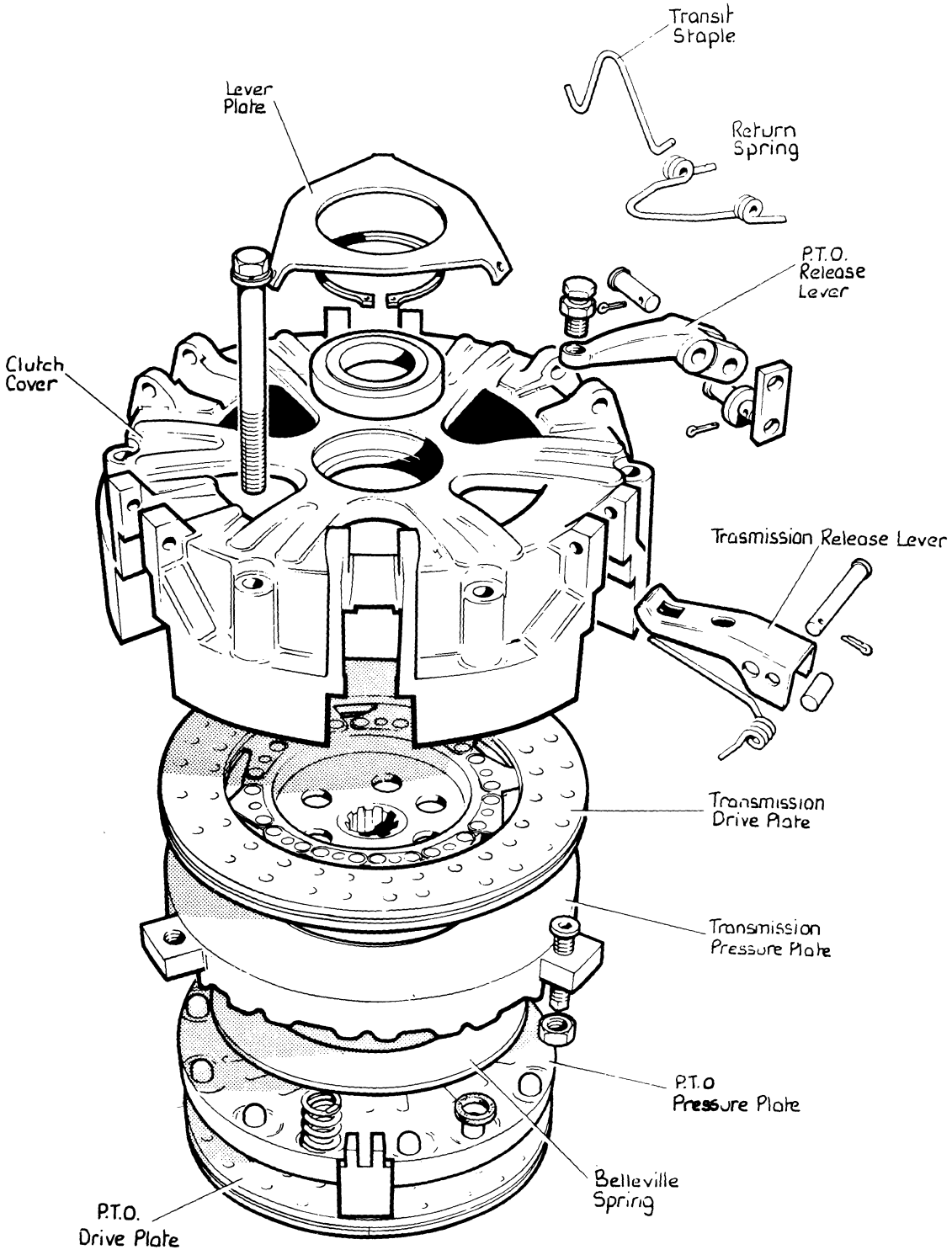

FIGURE 1B11. COMPONENTS OF DUAL CLUTCH

9-38124

Dismantling Clutch Unit

Having removed clutch assembly from tractor, dismantle as follows.-

1. Set base plate K912917 (modified if necessary see figure B9) on a firm, level surface and place the three clutch plate spacers, positioned so as to be under, or in line, with the PTO clutch operating levers. Also place the six clutch cover spacers (DB 8832/2) over the six tapped base plate holes which will line up with the corresponding holes in the cover.

2. Place clutch assembly on base plate. Start the six long setscrews then firmly screw in the PTO centre pillar. Bolt clutch assembly firmly on base plate and remove the three transit staples.

3. Mark relative positions of cover end both pressure plates, to ensure correct re-assembly and balance of clutch, by lightly centre punching the three castings.

4. Remove split pins securing the three PTO lever pivot pins and slide pins from cover locations Lever return springs can also be removed. Swing the PTO levers out beyond the cover then remove PTO centre pillar.

5. Remove split pins from the three transmission lever pivots and withdraw pins Lever return springs can then be removed outwards and release plate lifted off levers Each lever can then be lifted from its cover location with its roller pin.

6. Release the six setscrews (DB 8832/5) evenly and in a diagonal pattern until all the spring compression is released

7 Unlock and remove the three transmission lever adjusting screws with Allen key to allow the pressure plate and driven plate to be removed separately Lift off cover, driven plate and pressure plate to allow access to the coil springs, Belleville spring and insulating washers.

8 Links joining the PTO levers to the PTO pressure plate can be removed, after the six split pins have been removed

Note the position of holes in links these are offset towards centre of clutch.

Inspection and Rectification

1 After thoroughly washing all parts, except clutch facings and bearing, in a cleaning solvent, inspect the following and renew if necessary.

2. PTO release levers, pivot pins and links for wear.

3. PTO lever adjusting screws for wear on spherical face.

4. Transmission release levers, pivot pins, rollers and adjusting screws for wear.

5. Transmission release lever plate for wear on bearing face or lever contact points.

6. Pressure plates and cover for distortion, heat cracks or excessive dishing of friction faces.

7. Pressure plates and cover for excessive wear on driving lugs renew if wear on any one face exceeds 0.005in (0.13mm).

8. Driven plate facings. If badly glazed, burnt, oil soaked, cracked, split or worn to the rivet heads, replace with facings of the correct material.

9. Driven plate discs, for loose rivets, and hubs for excessive spline wear. (Excessive spline wear indicates possible misalignment of clutch shaft).

10. Bearing for smooth running without dryness or excessive axial play

11. Thrust springs for free length and Belleville spring for overall height.

12. Lever return springs for loss of tension

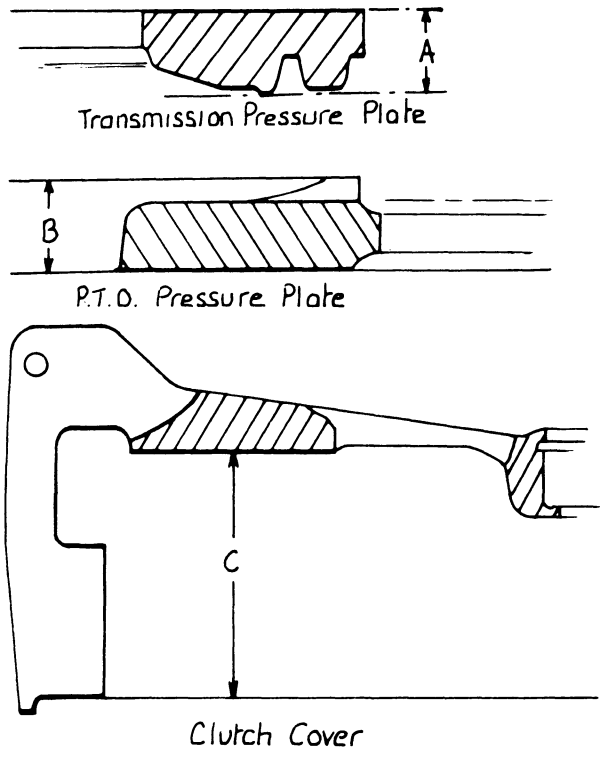

FIGURE B12.
REGRINDING LIMITS FOR FRICTION FACES
A 0 998in (25.35mm)
B 1 127in (28 63mm)
C 2 923in (74 25mm)

TEMPLATES FOR CHECKING ANGLE OF LEVER RETURN SPRINGS

PTO lever springs

1. On a piece of stiff card draw a base line 'A'—'B' approx. 8in long.
2. Mark a point 'C' 4in from point 'A'.
3. With the aid of a compass scribe arcs 1.25in from point 'A' and 3.5in from point 'C'.
4. Draw a line from point 'C' through the point at which the two arcs intersect. The angle made between this line and line 'C'—'B' is the max. spring angle required i.e. 162 .
5. Place spring over the diagram as shown below. If the spring arms lie within the 162 angle it may be re-used. If the spring arms lie outside the 162 angle it must be replaced. It is useless bending it back to lie within the specified angle

Transmission lever springs

1. On a piece of stiff card draw a base line 'A'—'B' 6in long.
2. With the aid of a compass scribe arc $2\frac{1}{2}$in from Point 'A' and 5.9in from point 'B' where the arcs intersect is point 'C'.
4. Place the spring over the diagram as shown below. If the spring arms lie within the 75 angle it may be re-used. If the spring arms lie outside the 75 angle it must be replaced, it is no use bending it back to lie within the specified angle.

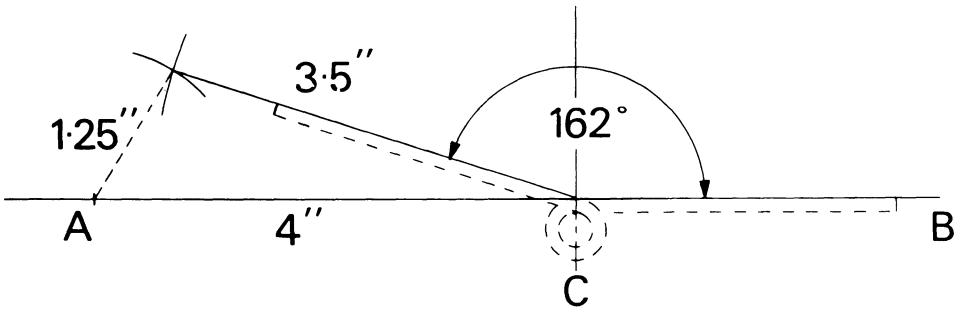

FIGURE B13 CHECKING PTO LEVER RETURN SPRINGS

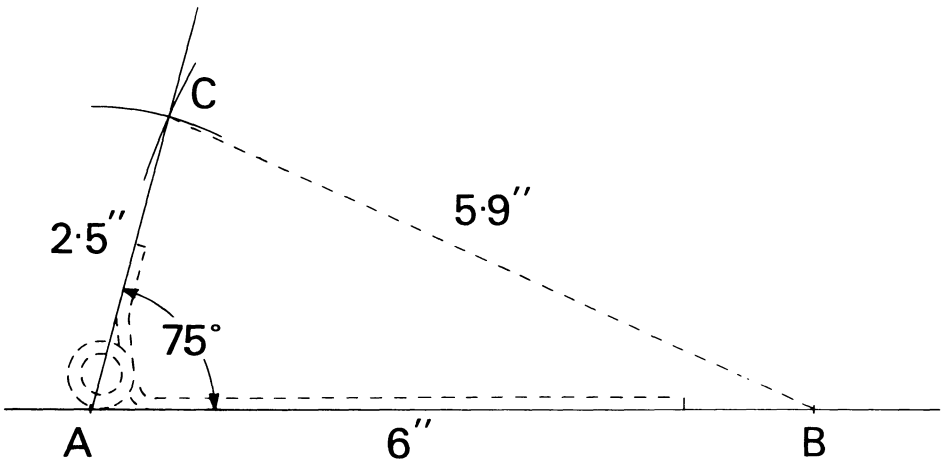

FIGURE B14. CHECKING TRANSMISSION LEVER RETURN SPRINGS

Lubrication of Moving Parts

Parts requiring lubrication before assembly are:

1. Sides of drive lugs on both pressure plates.
2. Belleville spring locations on both pressure plates.

Use a light smear of Achesion Colloids GREDAG 15469, or an equivalent graphited grease having an operating temperature range of at least 150°C (270°F) i.e. a grease which will not creep or drip at this temperature.

Re-Assembling Clutch Unit

1. Ensure baseplate is clean then place three clutchplate spacers (Code No. 33) equi-distance apart and positioned to be under, or in line with PTO clutch operating levers.
2. Place six clutch-cover spacers (DB 8832/2) over the six tapped base plate holes which will line up with the corresponding holes in cover.
3. Place clutch PTO pressure plate, friction face down on the clutch-plate spacers (Code No. 33). Assemble twelve new fibre washers on the spring seatings, fit the twelve springs and Belleville spring to their respective locations

   NOTE: Belleville outside diameter will be higher than inside diameter when in position, and is located only by the pressure plates (see warning on page B12).
4. Assemble PTO levers and links, then connect links to pressure plate with pivot pins and secure with split pins.

   NOTE. ensure that **all** links are fitted so that the pivot pin holes are offset towards centre of clutch.
5. Fit new fibre washers on to the twelve spring locations on transmission pressure plate then turn plate over and fit it on top of thrust springs. Align the two pressure plate marks and make sure that all twelve springs are correctly seated on a fibre washer.
6. Place transmission driven plate on its pressure plate: dished hub of plate downwards into pressure plate.
7. Assemble bearing into cover and fit circlips. Place cover on pressure plates, lining up holes in cover with spacers on base plate and dismantling marks on cover with similar marks on pressure plates.
8. Ensure that thrust springs are seated correctly before placing the six setscrews in position through cover and spacers. Screw PTO centre pillar into baseplate then push locating collar (DB8832/12) over centre pillar to align the whole assembly.

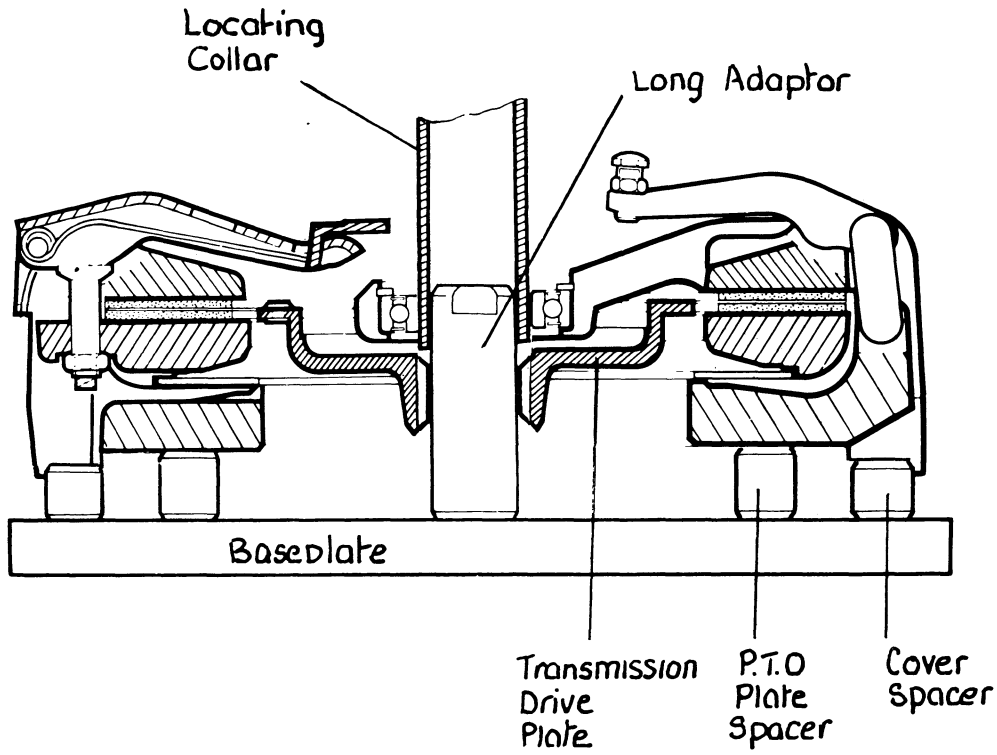

FIGURE B15 ASSEMBLING CLUTCH ON BASEPLATE

9. Tighten the six setscrews evenly, and in a diagonal pattern, until cover is pulled down far enough to allow the PTO release levers to be fitted in position on cover.

   WARNING:- DURING THIS OPERATION IT IS ESSENTIAL TO ENSURE THAT NO BINDING OCCURS BETWEEN PRESSURE PLATE LUGS AND CLUTCH COVER. THE BELLEVILLE SPRING, WHICH CAN BE VIEWED THROUGH THE COVER VENTILATION SLOTS, **MUST REMAIN CORRECTLY LOCATED** IN THE MACHINED RECESS OF TRANSMISSION PRESSURE PLATE.

   Locate spring over lever, fit pivot pin, with washer, through spring, cover and lever, then fit washer and split pin to secure pivot pin. Now firmly tighten the six setscrews so that cover is firmly clamped to baseplate then remove bearing collar from centre pillar.

10. Assemble adjusting screws into pressure plate and fit locknuts, do not tighten at this stage. Assemble rollers in transmission levers and fit into cover. When all three levers are in position, place release plate through the lever cutouts. Feed the longer leg of return spring through lever and enter end through release plate hole Align spring loop, lever and cover hole then fit pivot pin. Secure in position with washer and split pin.

Setting the Release Lever Heights

1. Already having the long centre pillar (DB 8832/4) in the base plate, screw actuator assembly (K961844) - part of Basic Kit No. 1 with plate (DB 920204) into the centre pillar adaptor then operate handle at least twelve times to settle the clutch mechanism. Remove actuator and plate.

2. Screw the centre pillar of the Basic Kit No. 1 into the PTO centre pillar adaptor then place a Code 4 spacer on the centre pillar. Place gauge finger (DB 8832/6) on the gauge body—this is also part of Basic Kit No. 1—then place finger body on centre pillar spacer.

3. Holding the gauge firmly and squarely down on spacer, turn the lever tip setscrew until it just touches the face of the gauge finger then lock in position with locknut. Turn gauge finger and set the two other lever setscrews in the same manner.

4. Remove the gauge finger, refit actuator and operate several times. Remove actuator, refit gauge finger and recheck height setting Reset screws, if necessary, and firmly tighten locknuts. Remove gauge finger, spacer and centre pillar.

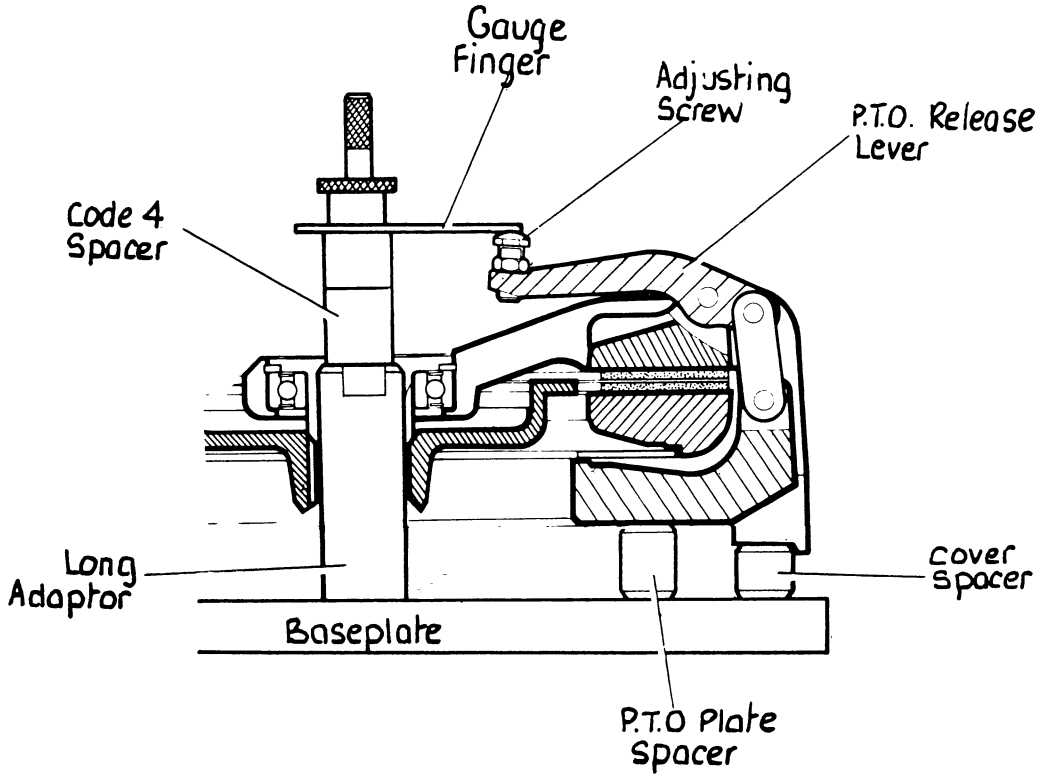

FIGURE B16 SETTING PTO RELEASE LEVERS

5. Fit the short (transmission) centre pillar adaptor into baseplate then fit actuator so that transmission levers can be operated at least twelve times.

6. Remove actuator and screw centre pillar into short adap- then place a code 4 spacer on pillar. Place gauge finger (DB 8832/6) on gauge body then place body on centre pillar.

7. Holding gauge firmly and squarely down on spacer, turn square end of the adjusting screws until release lever plate just touches gauge finger. Adjust all three screws so that gauge finger can be turned a full 360° whilst just touching lever plate all the way round, then tighten the locknuts.

8. Remove gauge finger, refit actuator and operate several times. Remove actuator, refit centre pillar, spacer and gauge. Check height setting of lever plate and adjust if necessary then tighten locknuts.

9. Fit transit staples over PTO release levers then remove the six setscrews and lift clutch from baseplate.

WARNING:- TRANSIT STAPLES **MUST** BE FITTED TO THE PTO RELEASE LEVERS BEFORE CLUTCH IS REMOVED FROM BASEPLATE, TO PREVENT DISPLACEMENT OF BELLEVILLE SPRING DURING HANDLING.

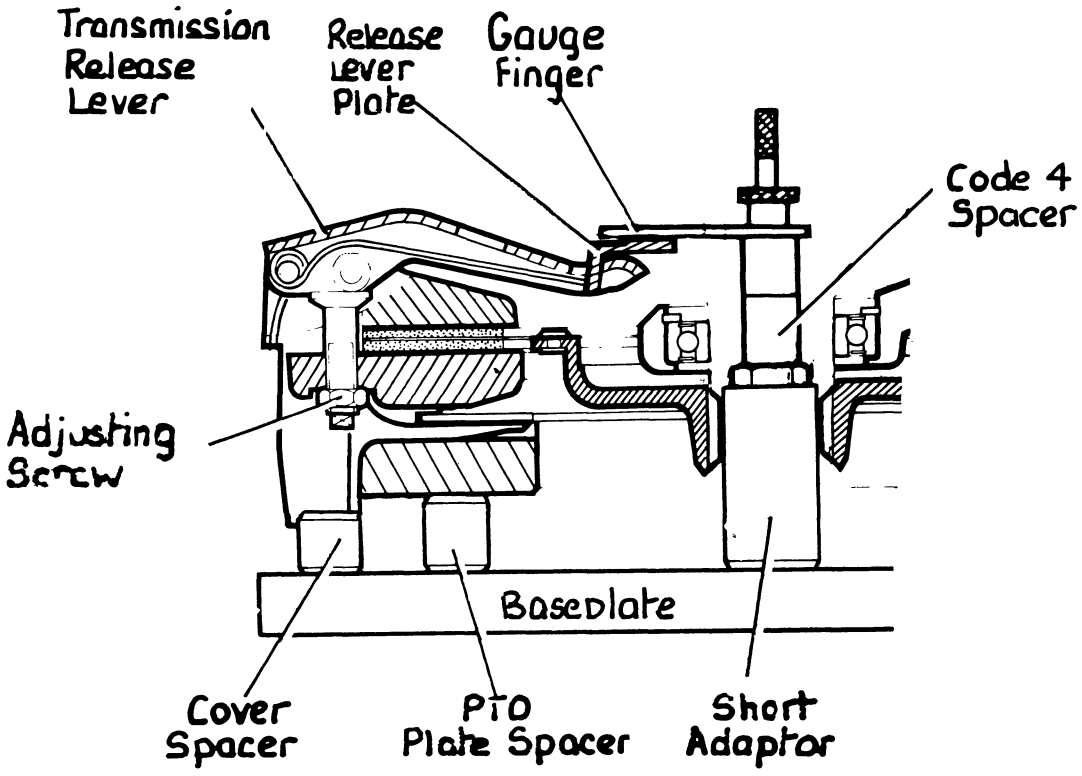

FIGURE B17. SETTING TRANSMISSION RELEASE LEVERS

May 1975*
(Reissued February 1976 with amendments overleaf)

HOW IT WORKS—HYDRAULIC CLUTCH SYSTEM
'Q'-CAB TRACTORS

NOTE: This information does not apply to Highway tractors.

Transmission Clutch
The transmission clutch is identical to that fitted to tractors with mechanically operated clutch system except that it is hydraulically operated using similar cylinders to the braking system. Cylinders and seals are colour coded with a blue band and only mineral oil type replacement components available from DB Parts Department must be used.

> **WARNING**—The only fluid approved for use in clutch and brake reservoirs is Shell Tellus 27—this is clearly marked on the reservoir covers. Fluids normally described as brake fluids, power steering fluids, automatic transmission fluids or universal tractor oils are definitely **NOT** compatible and **MUST NOT** be used.

A reservoir supplies oil to the master cylinder which is operated by the clutch pedal through a push rod. The master cylinder feeds oil to the slave cylinder mounted on the side of the main frame.

PTO Clutch
The PTO clutch is cable operated from a lever mounted to the left of, and behind the driver's seat.

UNIT REMOVAL AND REPLACEMENT

Clutch Master Cylinder
Remove bonnet and disconnect two pipe unions at top of cylinder. Disconnect master cylinder push rod from clutch pedal, then remove two nuts and bolts securing cylinder to bulkhead; remove cylinder complete with fork.

Replacement is the reversal of removal except that the reservoir should be topped up with Shell Tellus 27 and the system bled (page B15). Adjust the master cylinder and foot pedal (page B15).

Clutch Slave Cylinder
Disconnect pipe union at top of cylinder and release the return spring. Slacken the adjuster bolt locknut then remove the adjuster bolt. Remove two nuts and bolts securing cylinder to main frame bracket; remove slave cylinder.

Replacement is the reversal of removal except that the reservoir should be topped up with Shell Tellus 27 and the system bled (page B15). Adjust the clutch pedal free-play (page B15).

Transmission Clutch Adjustment—Fig. B21

This should be checked at least every 60 hours and the tractor should **NEVER** be operated with insufficient pedal free-travel.

The free-play must not be allowed to fall below 6mm ($\frac{7}{32}$in). Adjustment is provided at the slave cylinder push rod. Using a rule, measure the distance from the master cylinder push rod to the bulkhead. Depress the foot pedal to take up free-play, then check the amount of fork travel. If this is less than 6mm ($\frac{7}{32}$in) disconnect the spring 'E', with rod 'F' held securely to prevent it rotating, release locknut 'G' and unscrew the adjuster 'H' until 6mm ($\frac{7}{32}$in) of free-play is available; tighten locknut.

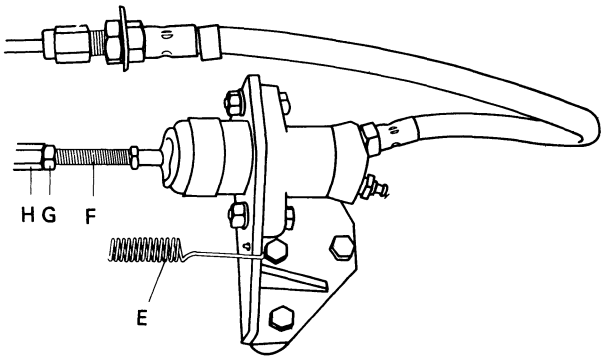

FIGURE B21. TRANSMISSION CLUTCH ADJUSTMENT

PTO Clutch Adjustment—Fig. B22.

Place a rule between the cable abutment and cable clevis. Apply hand pressure on the cross shaft lever to take up free-travel. The amount of free-travel in the cable should be between 2.5 and 5mm. Adjustment is by means of the threaded adjuster 'A'. Adjustment should be checked every 60 hours.

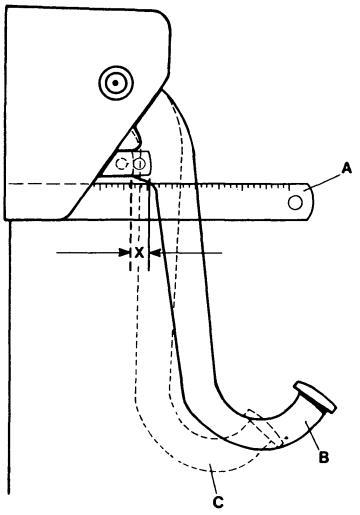

FIGURE B20. CLUTCH PEDAL FREE TRAVEL

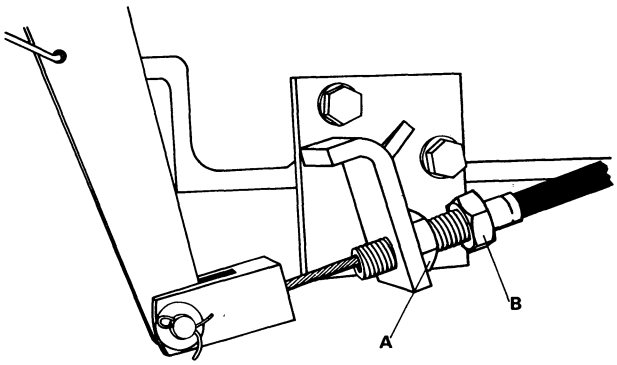

FIGURE B22. PTO CLUTCH ADJUSTMENT

Master Cylinder and Foot Pedal

If a master cylinder or clutch pedal is disturbed the following adjustment must be carried out.

1. With foot pedal against rear stop the master cylinder push rod clevis pin must freely enter the hole in the pedal. Adjust threaded end on push rod to obtain correct adjustment.

2. Carefully depress pedal until master cylinder is bottomed. Adjust stop bolt in pedal to contact the console and then turn stop bolt 1 further full turn anti-clockwise to prevent master cylinder from bottoming in service.

Clutch Hydraulic System Bleeding

Remove all free travel from release bearing and bleed in the same manner as that for the braking system (page F8). Do not bottom release levers during this operation as this will cause damage to the clutch. Readjust free-travel as described above.

Clutch System Faults

If a variable free-travel is obtained due to the slave cylinder not retracting fully, first check master cylinder push rod adjustment and, if necessary, fit a stronger slave cylinder return spring (part number K624954).

SPECIFICATIONS AND DATA—LAYCOCK DUAL CLUTCH

	1412	1410
Clutch type	PART No. K950876 Laycock 86166	PART No. K951600 Laycock 86762
Plate diameter (transmission)	12in; 305mm	
Plate facing material	Thermoid 11046	
Plate thickness (new)*	0.358in; 9.09mm	
Plate diameter (PTO)	12in; 305mm	
Plate facing material	Capasco F30C	
Plate thickness (new)	0.363in; 9.22mm	
Number of coil thrust springs	12	
Spring identification colour	Yellow	Pink
Spring free length (minimum)	1.43in 36.45mm	1.51in 38.35mm
Spring checking length	1.137in; 28.88mm	
Spring pressure at checking length	87-97lb 39-44kg	83-92lb 38-42kg
Number of Belleville thrust springs	One	
Spring identification colour	Yellow	Pink
Spring free height (including material thickness)	0.365-0.353in 9.27-8.96mm	0.399-0.386in 10.35-9.80mm
Spring minimum serviceable height (from flat) (including material thickness)	0.353in 8.96mm	0.386in 9.80mm
Spring checking height (from flat) (including material thickness)	0.169in 4.29mm	0.191in 4.85mm
Spring pressure at checking height	1033-1262lb 470-570kg	1280-1450lb 580-658kg
Release lever springs (transmission)		
Wire diameter	0.144in (9swg); 3.66mm	
Assembled load (per spring)	14lb; 6.3 kg	
Spring rate (approx.)	0.34 lb ft/degree; 0.05 kg metre/degree	
Angle between arms (when free)	75° maximum	
Release lever springs (PTO)		
Wire diameter	0.104in (12swg); 2.64mm	
Assembled load (per spring)	10lb; 4.5 kg	
Spring rate (approx)	0.65 lb ft/degree; 0.009 kg metre/degree	
Angle between arms (when free)	162° maximum	
Refacing dimensions		
Maximum depth of clutch cover (friction face to flywheel face)	2.867in; 72.82mm	
Minimum thickness of transmission pressure plate (Belleville abutment to friction face)	0.936in; 23.77mm	
Minimum thickness of PTO pressure plate (Belleville abutment to friction face)	1.127in; 28.63mm	
Pressure plate lug clearance in cover (new)	0.009-0.004in; 0.2-0.1mm	
(maximum)	0.029in; 0.72mm	
Pedal free-play—mechanical	1.5-2.0in; 38-50mm	
Pedal free-play—hydraulic	$1\frac{1}{2}$-$2\frac{1}{2}$in; 38-60mm	
Hand lever free-play—mechanical		
Hand lever free-play—hydraulic		
Release lever height settings:		
Flywheel face to trans. release lever plate	4.125in; 104.8mm	
Flywheel face to PTO Lever adjusting screws	5.125in; 130.2mm	
Baseplate face to trans. release lever plate	4.875in; 123.8mm	
Baseplate face to PTO lever adjusting screws	5.875in; 149.2mm	
	$\frac{7}{32}$ $\frac{15}{32}$in; 6–12mm	
	2.5–5mm	

* The transmission driven plate in the original clutch assembly K947033 (fitted to 1412 tractors only) incorporated spring flights The plate thickness is different therefore.

TRANSMISSION—1412 TRACTORS

HOW IT WORKS

The 1412 transmission is identical in operation to the 1212 Hydra-Shift tractor transmission. The only constructional differences being changes to range gearbox ratios, a four-pinion differential and a larger differential-lock sleeve.

UNIT REMOVAL AND REPLACEMENT

As the clutch driveshaft is integral with the gearbox it is necessary to 'split' the tractor when removing the gearbox.

For gearbox servicing the easiest method of 'splitting' the tractor is to separate the rear axle from the main frame, after removing the Quiet cab when fitted.

To remove the four-speed (Hydra-Shift) section only, the rear axle can be removed complete with reduction units and gearbox attached, the four-speed section can then be removed without detaching the range section from the rear axle.

To remove the range section, or complete gearbox, the reduction units must first be removed then the rear axle case removed whilst the gearbox remains in situ. The complete gearbox can be withdrawn rearwards and the range and four-speed sections separated.

Removing the four-speed (Hydra-Shift) section

First clean the outside of clutch housing, gearbox top, rear axle, main frame and power take-off unit. When tractor is clean and this is important otherwise dirt may enter the main frame and affect the hydraulic system after re-assembly, move tractor on to a piece of clean, firm and level ground.

Drain transmission oil into clean containers, capacity approx. 10½ gallons (47.7 litres), by removing drain plugs from main frame and rear axle case.

Remove silencer and bonnet top. Disconnect wiring, throttle and gear change linkage, so that fuel tank can be removed with instrument panel attached. if fuel tank is full drain some fuel off as a full tank is very heavy.

Disconnect steering pipes from servo valve then remove steering column complete with mounting brackets; taking care not to damage Hydra-Shift valve spool.

Remove gearbox cover bolts, some of these pass through front of cover into clutch housing and others come through rear axle case, then lift off cover, this is heavy and must be guided round the steering pipes.

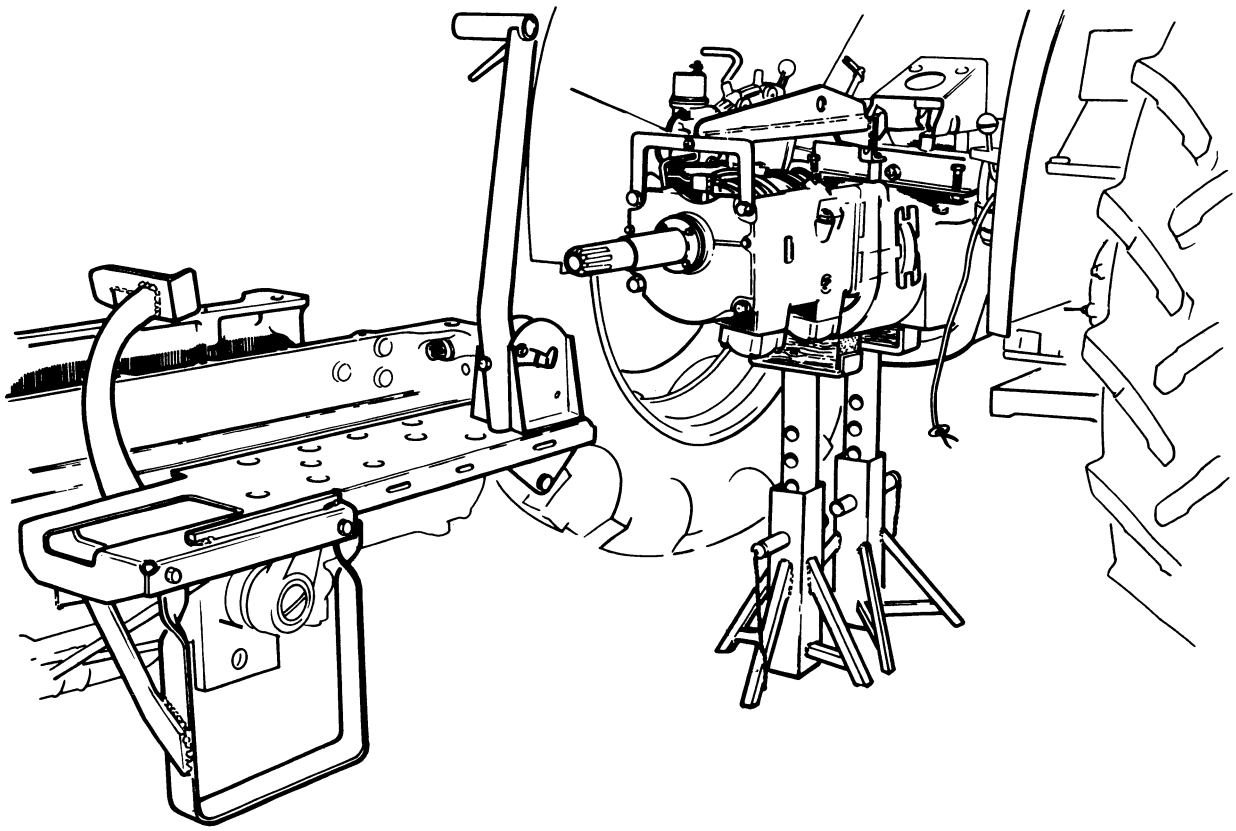

FIGURE C1 TRACTOR 'SPLIT' FOR GEARBOX REMOVAL

Remove the gearbox rear mounting bolts and withdraw the two locating bushes.

Remove the Hydra-Shift oil filter screen

This is situated on underside of main frame adjacent to the hydraulic system oil filter.

Disconnect and remove the rear half of the hydraulic pump-to-distributor block oil feed pipe. Remove drawbar frame and drawbar. Remove seat and seat support bracket.

Disconnect and remove pipe to hydraulic take-off coupling then remove sensing unit.

Remove power take-off unit and withdraw cardan shaft from gearbox.

Bolt the two support legs to the tractor frame and bolt the steady bracket on the front face of rear axle. This bracket is to hold the gearbox and axle case at right-angles and the two setscrews must be screwed down until they come into contact with the gearbox mounting lugs.

Remove all bolts attaching rear axle case to main frame and remove the bolts attaching fenders to footplates. Disconnect both brake rods. Fit the lifting bracket on to gearbox and using a suitable portable crane or gantry, support the weight of the gearbox so that the rear axle can be pushed off its dowels and the two halves separated far enough apart to allow sufficient working room.

To separate Hydra-Shift section from range section

Place a suitable support under the front end-plate of range section, so that gearbox remains level when crane is lowered.

Remove oil pipe connecting pump to control valve then remove control valve.

Place a sling round the Hydra-Shift section and take the weight but do not lift it. Remove the four front end-plate nuts but do not remove the two setscrews.

Separate the two sections by *levering the rear planet carrier forward* until it is clear of the range section then slide the complete Hydra-Shift section forward off the four long studs.

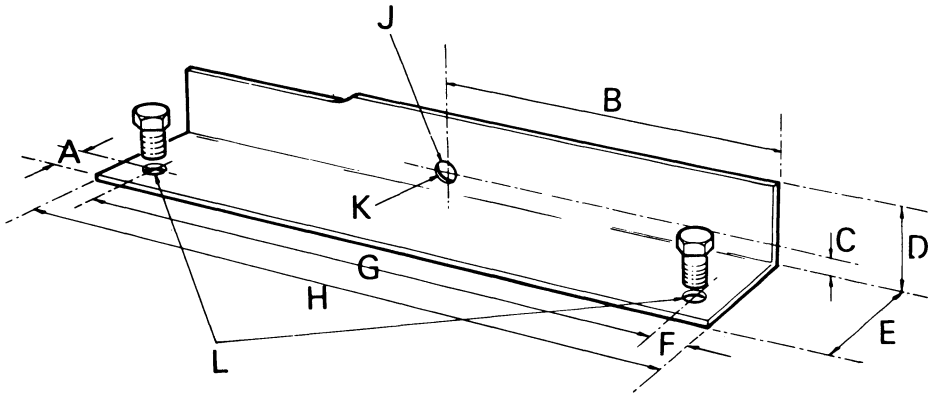

FIGURE C2. GEARBOX TO REAR AXLE STEADY BRACKET

A	*1in (25.4mm)*	*G*	*12¾in (324mm)*
B	*7⅞in (200mm)*	*H*	*15¾in (400mm)*
C	*⅝in (15.8mm)*	*J*	*Drill ⅝in (15.8mm) dia*
D	*2in (50mm)*	*K*	*To rear axle case*
E	*3in (75mm)*	*L*	*Drill ⅝in (15.8mm) dia weld ⅝in nuts underneath plate to align with holes*
F	*1½in (38mm)*		

To refit the Hydra-Shift section

As it is necessary to turn the rear planet carrier, to engage it into the freewheel, when fitting the two halves together, the rear brake band must be pushed into the disengaged position. This can be done with oil, or air provided that it is free of water droplets and does not exceed 80 lb/in² (5.6 kg/cm²)

Remove the rear clutch pipe, complete with sequence valve then replace the control valve. Screw a suitable adaptor into the control valve connection normally occupied by the rear clutch pipe, so that oil or air pressure can be applied.

Lift the section on to the four long studs, using a crane and sling to support the weight as during removal. Slide the section rearwards whilst turning input shaft to engage the rear planetary unit on to the range gearbox splines. When gap is reduced to half-an-inch (25mm) place valve spool in upper (1st gear) position and apply pressure through adaptor until rear brake band is released. Whilst maintaining pressure to hold brake band 'off', rotate carrier in direction of engine rotation and push the two sections together, starting the threads on pump outlet pipe union at the same time.

When sections are 'fully home' check that carrier can be turned in direction of engine rotation but cannot be turned in opposite direction then release pressure. Remove adaptor, refit clutch pipe and replace the four stud nuts. Fully tighten pump outlet pipe union.

If air is used to pressurise the brake cylinder this will introduce air into the system which can cause temporary difficulty in engaging third and fourth gears. The system will however vent itself if engine is run at a fast idling speed and the gear lever moved slowly but continuously between second and third gear positions.

Before commencing to re-assemble the tractor, remove the hydraulic system filter and clean out the main frame.

Smear axle case face with jointing compound then fit a new gasket into position.
Screw four $\frac{1}{2}$ UNC guide studs into axle case, two at top and two at bottom Do not make the guide studs the same length but let them vary by about $\frac{1}{4}$in. (6mm) so that they don't all have to be entered into the main frame holes at the same time.

Smear support snout and clutch shaft splines with grease then bring the two halves of the tractor together. *Ensure that gearbox is level and in line with main frame and don't forget that clutch shaft splines will have to be aligned with clutch plate splines* Carefully lever one of the front planet pinions round until it becomes solid, which shows that shaft has entered into clutch plate.

As the two halves are being brought together ensure that hand brake operating lever enters the hand lever fork and the diff-lock pedal is positioned to engage underneath the operating lever on rear axle. Also check that the gearbox lubricating oil pipe enters its feed pipe in axle case. Check that axle and frame faces are parallel and engage the guide studs. Continue bringing the two halves together until bolts can be fitted to pull frame on to dowels. Do not use more force to bring the two halves together than was required to separate them: *if the two halves are correctly aligned excessive force will not be neccesary*

When axle case is 'fully home' check that diff-lock pedal is engaged under operating lever on axle case then remove guide studs, refit and fully tighten main frame bolts.

Remove lifting bracket and axle steady bracket. Replace gearbox mounting bushes and bolts, and check that gearbox lubricating pipe is correctly connected. Fit new gaskets on main frame then replace gearbox cover, passing it under steering pipes and ensuring that range gear lever is correctly engaged in its selectors. Lightly tighten bolts into main frame then fully tighten bolts through axle case. Finally fully tighten bolts down into main frame before replacing wedge. Tap the wedge into position then replace and tighten bolts into clutch housing.

Push Hydra-Shift valve into its lowest position then replace steering column, complete with servo valve and bracket. Refit starter safety switch harness.

Smear splined end of cardan shaft with grease then fit shaft through gearbox and into clutch. Turn shaft until it is felt to engage in clutch plate splines then push shaft into flywheel spigot bearing.

Tap the two dowels back into the power take-off case then screw two guide studs into axle case. Fit a new gasket on axle case, using a thin film of grease to hold it in position, then replace power take-off unit. Turn output shaft until it is engaged on cardan shaft splines then push unit 'home' and loosely fit retaining bolts. Tap the two dowels into axle case then remove guide studs and fully tighten the bolts.

Replace Selectamatic oil filter and also the Hydra-Shift filter. Refill transmission with oil; this is easier if poured through top of PTO case before sensing unit is refitted.

Reconnect and adjust brakes. Refit drawbar frame. Rebolt fenders to footplates, fitting the plastic strip between them.

Before starting the engine, refill the steering reservoir with clean oil and when engine is running vent the system. Top up the oil reservoir after stopping engine.

Removing the Complete Gearbox (or range section)

After thoroughly cleaning the gearbox cover, rear axle case, power take-off unit and reduction units, to minimise the possibility of dirt entering the main frame and affecting the hydraulic system after re-assembly, move tractor to a piece of firm and level ground.

Remove drawbar frame then raise rear of tractor and remove both rear wheels.

Remove fenders, seat and seat support bracket, not 'Q' cab tractors.

Drain oil from reduction units and, using suitable lifting tackle, withdraw both units.

Drain transmission oil into clean containers by removing drain plugs from filter housing and rear axle case, approximate capacity 10$\frac{1}{2}$ gallons (47.7 litres). Remove bonnet top. Disconnect wiring, throttle and gear change lever so that fuel tank can be removed with instrument panel attached.

Disconnect and remove the rear half of the pump-to-distributor block oil pipe.

Disconnect and remove pipe to hydraulic take-off coupling then remove sensing unit. Remove power take-off unit and withdraw cardan shaft from gearbox.

Place suitable supports under rear of main frame and place a sling round the ramshaft so that a portable crane can be used to remove the axle case.

Remove the bolts attaching axle case to main frame and whilst supporting axle weight on crane, push axle off its dowels. As the diff-lock spring must remain in the differential, but the sleeve removed with the axle case, it will be necessary to hold the spring compressed with a tyre lever, or similar flat bar until the front flange of axle case has passed over spring.

When axle is clear of differential spring, lift it clear and lower it to ground.

Disconnect steering pipes from servo valve then remove steering column complete with mounting bracket. Push Hydra-Shift valve downwards to avoid it being damaged when steering column is removed.

Remove the gearbox cover bolts; some of these pass through front of cover into clutch housing and others come through the rear axle case, then lift off the cover. this is quite heavy and must be passed round the steering pipes Remove the gearbox mounting bolts and withdraw the bushes. *Remove the Hydra-Shift oil filter screen:* this is situated adjacent to the hydraulic system oil filter.

Fit lifting bracket on gearbox and using crane to support but not lift the gearbox, withdraw complete gearbox rearwards.

Refitting the complete gearbox

Remove all traces of gaskets from axle and main frame faces, clean out main frame and inside of axle case. Remove element from Selectamatic oil filter.

Smear support snout and shaft splines with grease then lift gearbox, ensuring that it hangs level. Slide gearbox into position, carefully rotating the front planetary gear so that driveshaft is turned until it engages into clutch plate splines. When gearbox is located over its mounting holes replace locating bushes and bolts.

Ensure that the diff-lock sleeve is positioned inside the rear axle case and the sleeve spring is in the differential.

Lift the axle assembly so that it hangs vertical and swing it into position towards the main frame. Insert a piece of flat bar, such as a tyre lever, through axle case so that spring can be compressed into differential whilst front flange of axle case is passed over it.

When axle is past diff-lock spring, lift handbrake operating lever into hand lever fork and position diff-lock pedal so that it will be underneath operating lever in axle case. As axle is engaged on the dowels ensure that the gearbox lubricating oil pipe is correctly located in its feed pipe inside axle.

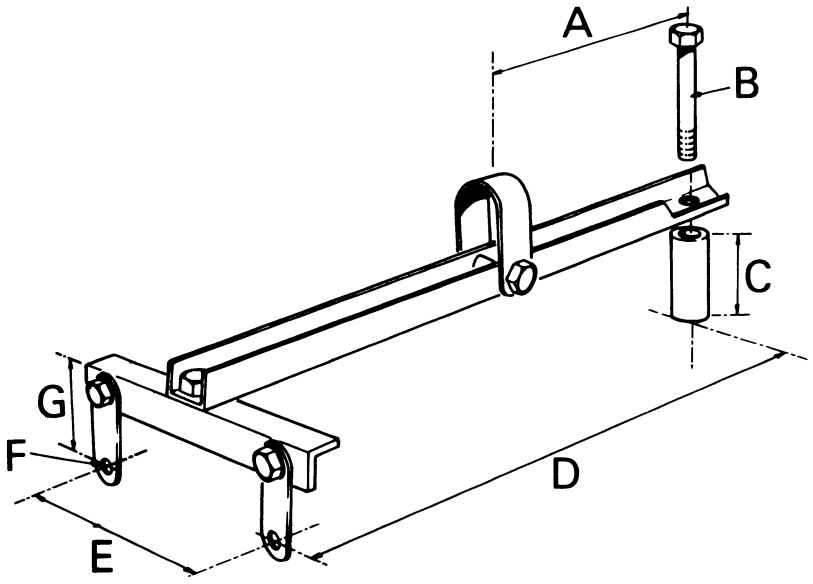

FIGURE C3. LIFTING BRACKET - GEARBOX

A. 8in (203.2mm)
B. Bolt, $\frac{1}{2}$ UNC x $4\frac{1}{4}$in
C. 3in (76.2mm)
D. $24\frac{1}{2}$in (621.3mm)
E 9in (228 6mm)
F $\frac{9}{16}$in (14.3mm) diameter
G $3\frac{1}{4}$in (82 5mm)

After fully tightening axle case bolts, push the diff-lock sleeve against its spring and engage the pedal fork in sleeve groove. Refit both reduction units, fitting the brake cam levers on camshafts before units are pushed 'fully home .

Smear splined end of cardan shaft with grease then slide it through gearbox. Turn shaft to engage it in clutch plate splines then push shaft into flywheel spigot bearing. Refit power take-off unit, using a new gasket.

Fit new gaskets on main frame, then replace gearbox cover. Passing it round steering pipes and ensuring that range gear lever is correctly engaged in its selectors. Lightly tighten cover bolts down into frame then firmly tighten bolts through axle case before fully tightening main frame bolts. Finally fit wedge and shims between cover and clutch housing then firmly tighten clutch housing bolts.

Replace the Selectamatic and Hydra-Shift oil filters. Refit the distributor block feed pipe. Fill transmission with oil, this is best done by pouring it into the PTO case before replacing sensing unit.

Replace Quiet cab if fitted, otherwise replace steering column and fuel tank. Refill reduction units with oil, replace fenders and drawbar

Before starting engine, refill the steering reservoir with clean oil and when engine is running vent the steering system. Top up oil reservoir after stopping engine

Removing Differential Assembly

After removing the rear axle case, as for complete gearbox removal, mark the two bearing caps then unlock the tab-washers and release the four bolts. Whilst supporting the differential this is quite heavy, remove the bolts, bearing caps and adjusters then lift the differential off gearbox end plate.

Replacing the differential

First check the marks made on the bearing caps so that caps will be refitted in their original position, then lift the assembly on to the end plate, crown wheel on right-hand side of pinion. Replace bearing caps and screw bearing adjusters into position before tightening cap bolts.

Adjusting differential bearing end-float

To ensure the correct setting is obtained the following precautions *must* be observed.

1. Always loosen the cap bolts before turning the bearing adjusters.

2. Before tightening the cap bolts, after turning the bearing adjusters, strike the caps a sharp blow with a copper hammer to re-align the bearings, then tighten the bolts.

3. Always check bearings for free rotation or drag with the cap bolts tight.

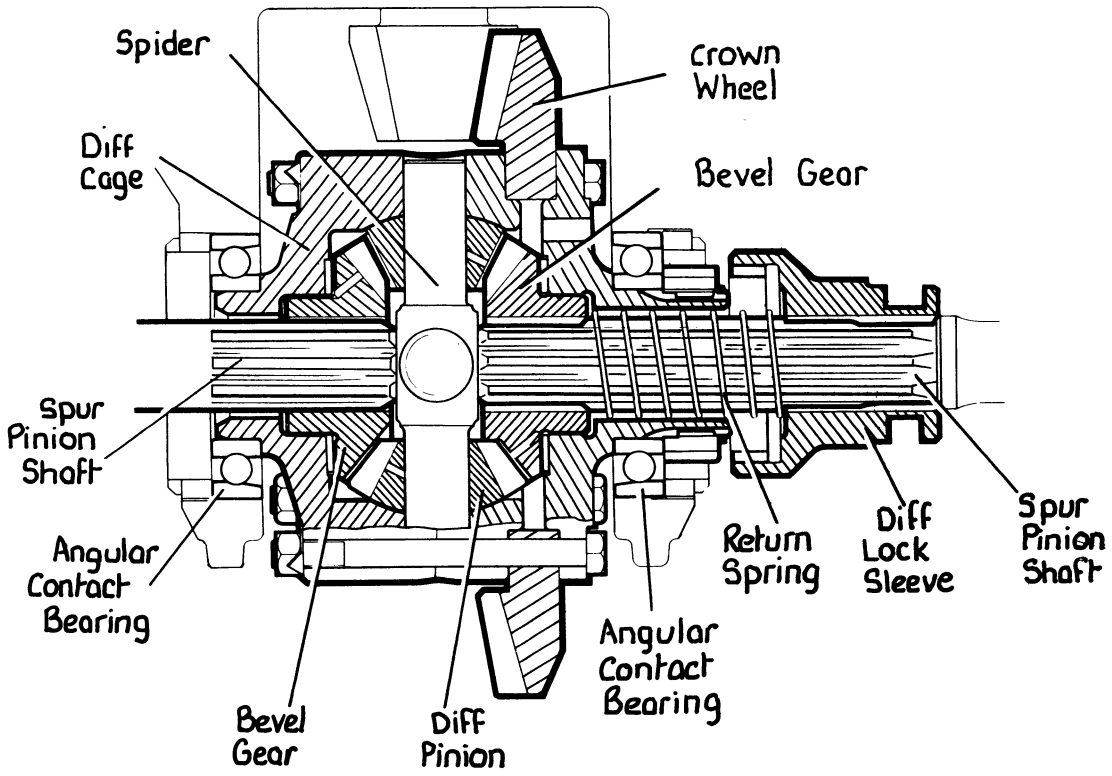

FIGURE C4. DIFFERENTIAL ASSEMBLY

Adjustment sequence:
Fully unscrew right-hand bearing adjuster and screw left-hand adjuster inwards to push diff cage as far as possible to the right, so that maximum backlash is obtained between crown wheel and pinion teeth.

Tighten right-hand adjuster until the bearings have a slight drag. This can be established by placing a plastic-handled screwdriver, with a 12in (30cm) blade across two of the diff-cage bolts. If the screwdriver is horizontal and its weight is sufficient to turn the cage, within the limit of the teeth backlash, end play is present but if screwdriver does not turn the cage the bearings have drag.

Unscrew the right-hand adjuster half-a-turn and check for drag. Repeat this operation—ensuring that precations 1, 2 and 3 are observed—until the weight of the screwdriver is just sufficient to rotate the diff cage. To ensure no tight spots exist, check for rotation at three equi-distant positions.

Having obtained the correct bearing setting, clearly mark the position of the two bearing adjusters then turn both adjusters an equal amount (left-hand outwards and right-hand inwards) until backlash between crown wheel and pinions is reduced to 0.007 to 0.009in (0.18 to 0.23mm). Check the backlash at three equally spaced teeth and if readings vary slightly use the smallest reading. Mark tooth with smallest reading and take all subsequent readings from this tooth. Measure the backlash with a dial guage mounted at right angles to a crown wheel tooth and when correct tighten cap bolts to 120 lb ft (16.6 kg metre). Recheck tooth backlash after tightening bolts, re-adjust if necessary then lock clamp bolts with tabwashers and bearing adjusters with the locking plates.

Differential-lock Sleeve Removal

The differential-lock sleeve cannot be removed through the right-hand side of the axle case and it is, therefore necessary to remove the reduction units and rear axle case, as during gearbox removal. The sleeve can then be extracted through the centre of the rear axle case.

UNIT MAINTENANCE AND REPAIR

Dismantling Differential Assembly

Mark both halves of differential cage then unlock and remove the twelve bolts. Separate end plate and remove crown wheel then 'Split' the cage and remove the bevel gears.

The side bearings are pressed into position and should not be removed unless they are to be renewed. If the side bearings are renewed ensure that the new bearings are fitted the correct way round; they are angular contact bearings and *must* be fitted so that the word THRUST stamped on the outer track will be against the bearing adjuster (Fig C4).

Re-assembling differential

With the side bearings in position and diff-lock gear ring secured with its circlip, place end plate, crown wheel and half the diff cage on bench, using two bolts to align holes. Fit bevel gear, with thrust washer underneath it, in cage. Smear spider arms and spherical faces of bevel pinions with anti-scuffing paste then fit pinions on spider and place spider in case. Fit remaining bevel gear, with thrust washer on it, then fit other half of cage; assembly marks in line. Replace bolts, from crown wheel side, fit new tabwashers and tighten nuts evenly to 75 lb ft (10 kg metre) then securely lock with the tabwashers.

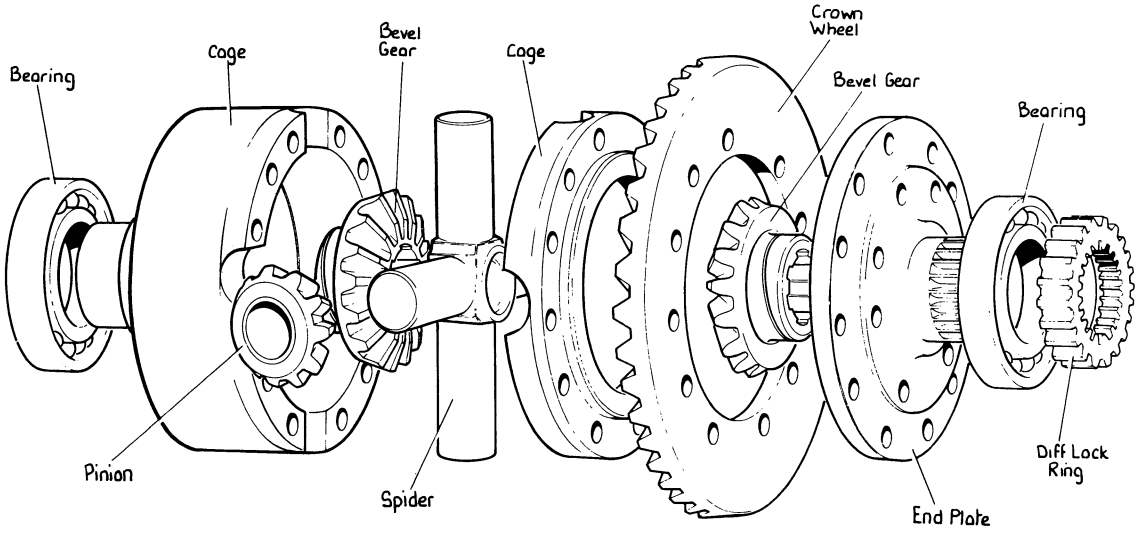

FIGURE C5. COMPONENTS OF DIFFERENTIAL

SPECIFICATIONS AND DATA—TRANSMISSION

Tightening Torques	*Thread dia.*	*lb ft*	*kg metre*
Brake band cylinder bolts	$\frac{5}{16}$in	20	2.75
Clutch cover-to-main-frame bolts	$\frac{1}{2}$in	75	10.5
Clutch cylinder to planet carrier bolts	$\frac{5}{16}$in	20	2.75
Diff. ring nut locking plate bolts	$\frac{5}{16}$in	20	2.75
Transmission pump to connection	$\frac{5}{16}$in	20	2.75
Diff. cap bolts	$\frac{5}{8}$in	120	16.5
Free-wheel housing bolts (2nd reduction)	$\frac{3}{8}$in	30	4.0
Front end-plate nuts	$\frac{1}{2}$in	75	10.5
Gearbox cover to main frame bolts	$\frac{1}{2}$in	75	10.5
Gearbox mounting bolts	$\frac{5}{8}$in	100	13.75
Pinion bearing support plate bolt	$\frac{3}{8}$in	30	4.00
Pinion nut	$1\frac{1}{8}$in	200	27.5
Planet carrier end-cover bolts	$\frac{3}{8}$in	30	4.00
Range unit end-plate bolt	$\frac{3}{8}$in	30	4.00
Rear axle case to main frame bolts	$\frac{1}{2}$in	75	10.5
Rear wheel nuts	$\frac{3}{4}$in	150	19.5
Reduction units to axle case bolts	$\frac{1}{2}$in	75	10.5
Support sleeve cap bolts	$\frac{1}{4}$in	9	1.25
Support snout bolts	$\frac{1}{4}$in	9	1.25

Pinion shaft bearing setting	0.002in (0.050mm) preload to 0.002in (0.050mm) end-float
Crown wheel teeth backlash	0.007 - 0.009in (0.18 - 0.23mm)
Differential side bearing setting	no pre-load to 0.002in (0.050mm) end-float
Layshaft bearing end-float	0.002 - 0.004in (0.05 0.10 mm)
Oil pump relief valve setting	70 lb/in² (4.9 kg/cm²)
Pinion shaft setting distance	6.3125in (160.337mm)

Special tools

DB8440	Connector and Adaptors—comprising	DB8440/1 main connector DB8440/2 right angle special adaptor DB8440/3 male/male adaptor
DB8267	Pressure Gauge 0 - 100 lb/in² (0 - 7 kg/cm²)	
DB8208	Pinion Setting Gauge	

HOW IT WORKS—FINAL DRIVE REDUCTION UNITS

Bolted to the ends of the rear axle case the final drive reduction units consist of a housing which contain the final driveshafts, spur pinion shafts and disc brake assemblies.

The spur pinion shafts are splined into the differential at their inner ends and supported by tapered roller bearings in the reduction housings at their outer ends. The spur pinions are integral with their shafts and in permanent mesh with drive gears on the final driveshafts. As the wheels are bolted to the final driveshafts the spur pinion shafts must always revolve with the wheels. To permit the final drive gears to spread the load equally across the full width of the teeth the final driveshaft gear is not rigidly attached to the driveshaft but is carried on crown-shaved splines and located between two circlips.

Final Driveshaft Oil Seal

This consists of an external dirt shield and two oil seals. The outer oil seal has a double lip and the inner seal a single lip. Grease will therefore pass the inner seal more easily than the outer seal.

Lubrication of the outer driveshaft bearing is by means of grease, which can be pumped into the cavity between the seals through the grease nipple at rear of housing.

In service it is only necessary to pump two shots of grease through housing nipple at 60-hour intervals.

The disc brake units are also enclosed in the reduction unit oil bath and operate on the spur pinion shafts.

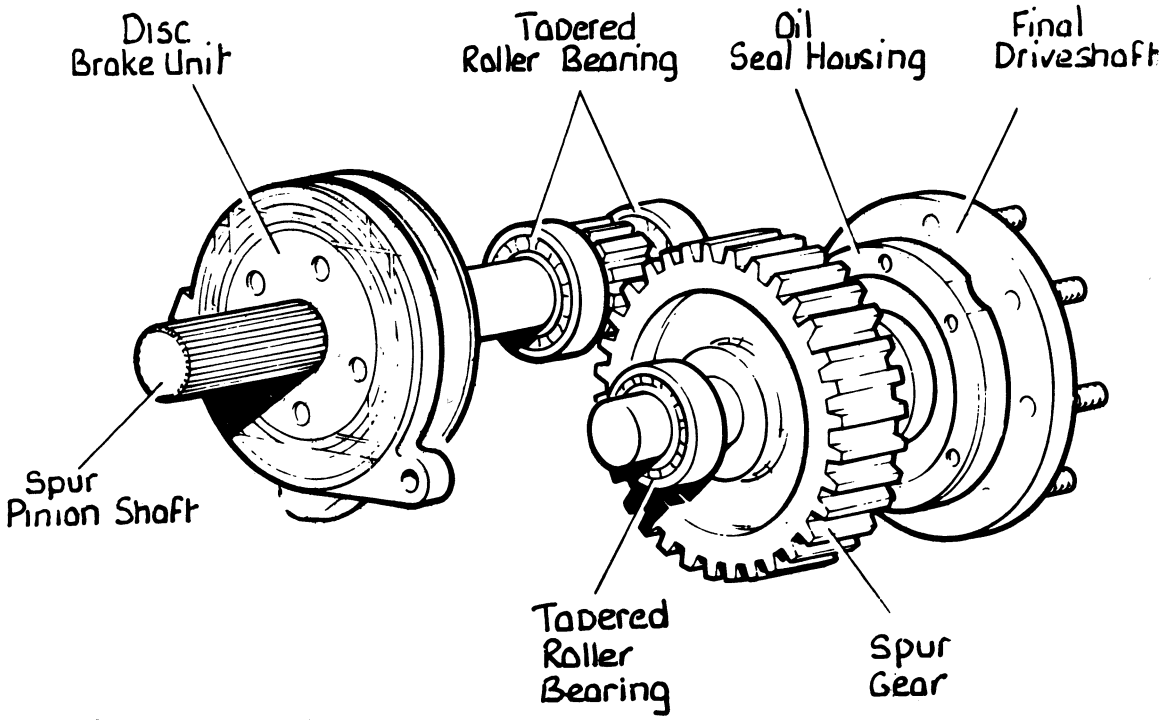

FIGURE D1. FINAL DRIVE REDUCTION GEARS

Reduction Unit

Raise rear of tractor, place suitable supports under hitch brackets and remove wheel. Drain oil from reduction unit and remove the three bolts attaching fender support to reduction case, otherwise raise rear of Quiet cab.

If right-hand reduction unit is being removed, depress differential lock pedal and wire lever, or rear end of pedal upwards in engaged position, so that diff-lock sleeve is held in engagement and will not be displaced when reduction unit is withdrawn.

Disconnect brake rod and remove nut from cam lever cotter pin. Tap pin free then tap cam lever towards end of shaft, to make sure that it is free.

Remove nuts from axle case flange then pass a sling round reduction so that a portable crane can be used to support reduction. If fender has been removed the lifting bracket shown in figure D2 can be used. Do not attempt to remove reduction without equipment to support it: the unit weighs approx. 500 lb (225 kg).

Whilst supporting the weight but not lifting the unit, first lever unit off dowels then pull unit horizontally away from rear axle *whilst pushing brake camshaft away so that it is withdrawn with reduction.*

Remove unit horizontally until spur pinion shaft is clear of axle case: taking care not to damage oil seal in axle case housing.

To replace a reduction unit, first ensure that the large 'O' ring is fitted in reduction case recess and smaller 'O' ring is fitted against camshaft bush in axle case, then smear camshaft bushes with grease.

Raise unit with lifting equipment so that it hangs with spur pinion shaft level. Use lifting bracket if fender is removed, otherwise use a suitable sling and after entering spur pinion shaft into axle case, push unit inwards and enter brake camshaft into axle case. Turn final driveshaft until shaft splines enter differential and before dowels are reached *slide cam lever onto camshaft* Fit cotter pin through cam lever, with nut slack, then slide lever onto shaft: there is insufficient room to do this when unit is "fully home".

When case has been pushed onto dowels, replace axle case nuts and fender bolts. Slide cam lever as far as possible onto camshaft then tighten cotter pin, refit brake rod and adjust. Refill unit with new oil of the recommended grade. Refit rear of Quiet cab, if fitted.

Replace wheel and lower tractor to ground

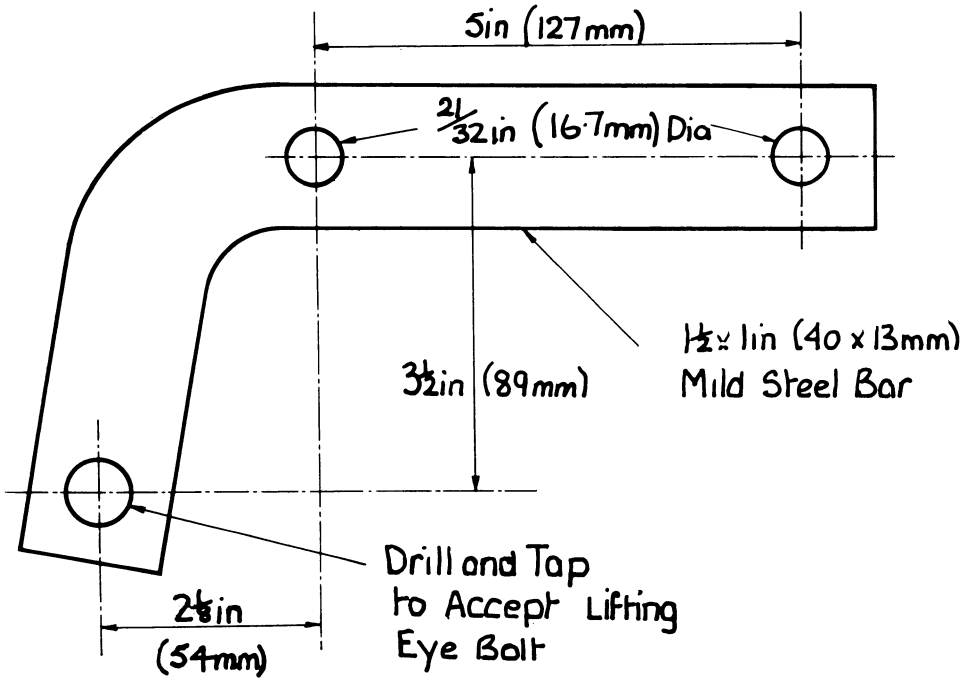

FIGURE D2. LIFTING BRACKET - REDUCTION UNIT

Maintenance

Each final drive unit has its own oil reservoir, which should be maintained to the filler/level plug with the recommended grade of oil. The final driveshaft outer bearings are grease lubricated and require a few shots of grease pumping through the nipples in rear of oil seal housings every 60 hours.

Final Driveshaft

This may be removed without removing reduction unit. Raise rear of tractor and place suitable supports under hitch brackets. Remove wheel and drain oil from reduction case. Remove cover from rear of case and lift circlip from its groove at inner end of driveshaft. Remove bolts attaching seal housing to case, these are accessable through holes in driveshaft flange, then lever shaft and housing away from case. As gear and circlip will remain in case whilst shaft is withdrawn it will be necessary to lever innner bearing off shaft with a large screw-driver, otherwise bearing rollers could be pushed out of cage as bearing is jammed against gear.

Having withdrawn shaft and housing, remove gear, circlip and bearing from case.

To remove shaft seals and outer bearing, first slide circlip off shaft then remove locking screw from shaft lock ring. After unscrewing lockring, with special spanner (Service Tool DB8009), support housing whilst pressing shaft out of bearing, alternatively screw two extractor bolts (Service Tool 900207) through holes in shaft flange—having first screwed a $\frac{1}{2}$ BSF tap through shaft holes to clean up threads—and tighten bolts to push housing off shaft. Remove seals by prising them out of housing: discard seals as they will be damaged by removal.

Replacing final driveshaft

If the collar has been removed from shaft, replace this, ensuring that the thin 'O' ring is first fitted on shaft. Replace bearing in housing then press inner seal into housing recess, ensuring that lip is towards outside of housing and seal is not distorted. Turn housing over and press outer seal in position also positioning seal lip towards outside and taking care not to distort seal.

Pack inside of seals and bearing with HMP grease then push shaft, complete with collar and dirt shield, into housing. Hold

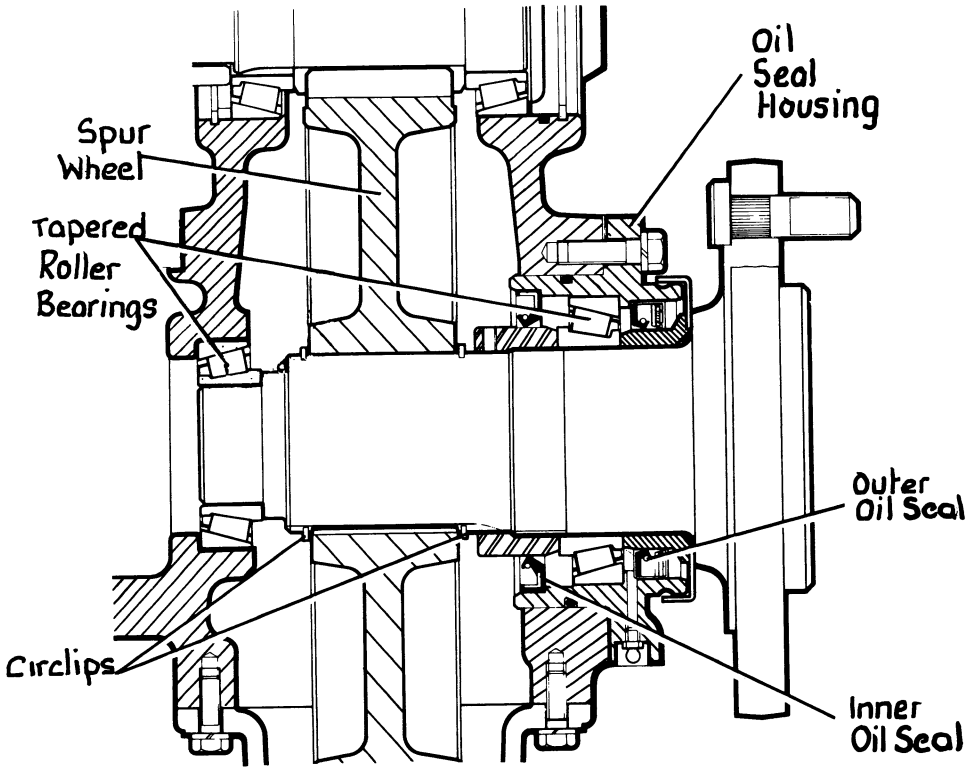

FIGURE D3. FINAL DRIVESHAFT AND BEARINGS

shaft flange in vice and screw locking ring on shaft; ensure that dirt shield is located on collar shoulder then tighten locking ring to clamp assembly firmly together. After firmly tightening locking ring with special spanner, smear locking screw with Loctite (grade 270) then fit screw into collar hole which is opposite a spline grove. Ensure surface of locking ring is not damaged as this would damage oil seal. Replace shaft circlip and ensure 'O' ring is fitted on seal housing.

Smear shaft inner bearing with grease then place bearing in case. Place gear inside case and fit shaft through case and gear. Fit circlip on shaft and enter shaft into bearing. Position seal housing so that grease nipple is pointing directly towards rear and replace three housing bolts: do not fit shims at this stage.

Tighten housing bolts evenly to push shaft into bearing and after ensuring that bearing is seated against shaft shoulder strike centre of shaft flange with a soft-faced hammer, to settle bearing.

Driveshaft bearing setting

With shaft in position and inner bearing fully seated tighten the three housing bolts evenly until shaft bearings become tight enough to prevent shaft being 'rocked' against gear backlash. Do not overtighten bolts and distort flange but tighten evenly so that when a feeler gauge is inserted at three equally spaced points, the gap is equal all the way round.

Having measured the gap between housing and case select shims 0.005in (0.127mm) less than gap. Remove bolts, lever housing away from case and fit shims. Replace all six bolts, tighten evenly and fully. The shaft bearings will then have the required pre-load.

Having fully tightened housing bolts, check that circlip is placed in shaft groove at inside of gear *then pump grease through housing nipple until seal cavity is filled and grease is forced passed seal on inside of housing.*

Refit cover, using a new gasket and refill unit with the recommended grade of oil. Refit road wheel and lower tractor to ground.

Dismantling Reduction Unit

Lay unit on floor so that it is resting on final driveshaft flange and pinion shaft is pointing upwards.

Remove small cover plate from reduction inner housing. This will expose the special shouldered clevis pin which should be removed; pin should not be tight but is tapped $\frac{1}{4}$UNC so that a bolt can be screwed in to assist exttaction. Remove the thirteen bolts attaching inner housing to reduction case then lift housing off. connecting link must be removed with housing but pivot lever remains in case and it may be necessary to release adjusting nut, to prevent lever fouling housing.

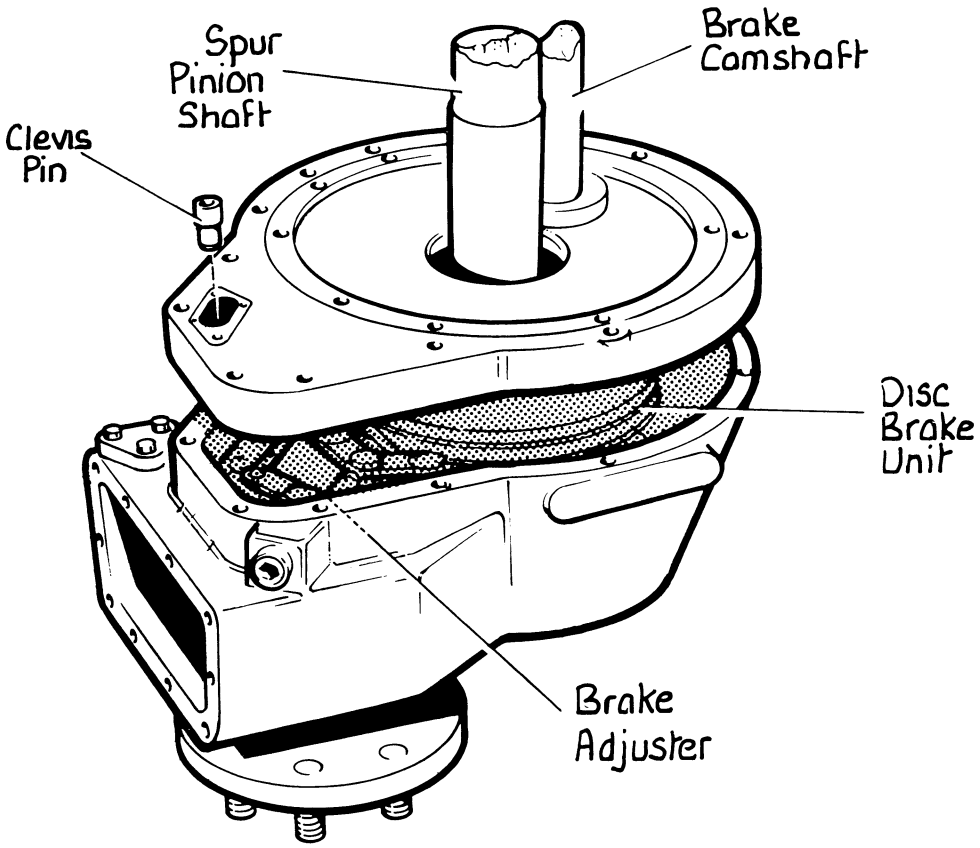

FIGURE D4. REMOVING REDUCTION CASE HOUSING

After removing inner housing to expose brake mechanism, remove circlip from brake links then lift off brake discs, noting order. Remove brake actuator then remove rema: ng plates, also placing them on bench in order of removal.

Remove cover from case then lift assembly onto bench, or a suitable packing case.

Lift circlip from its groove at inner end of drive-shaft then remove oil seal housing bolts: these are accessable through holes in driveshaft flange.

Pull shaft out of housing and gear but lever the inner bearing off shaft at same time: otherwise tapered rollers may be pushed out of cage by gear. After extracting shaft, remove gear, circlip and bearing from inside case.

To dismantle final driveshaft, remove grubscrew from shaft locking ring then unscrew locking ring—this is right-hand thread—with special spanner.

Clean threads in shaft extraction holes, by screwing a $\frac{1}{2}$ BSF tap through holes, then screw two extraction bolts (Service Tool K900207) through shaft holes.* Place two flat pieces of metal across housing flange, to protect extractor bolts from damage, then tighten extractor bolts evenly to push housing and bearing off shaft. An alternative method is to support housing with two flat plates across bed of a press then press shaft out of housing.

* Later tractors do not have these holes: For these tractors it is necessary to fabricate a jacking plate, Fig. D6. This should be used in conjunction with extraction bolts (K900207) as shown, Fig D7.

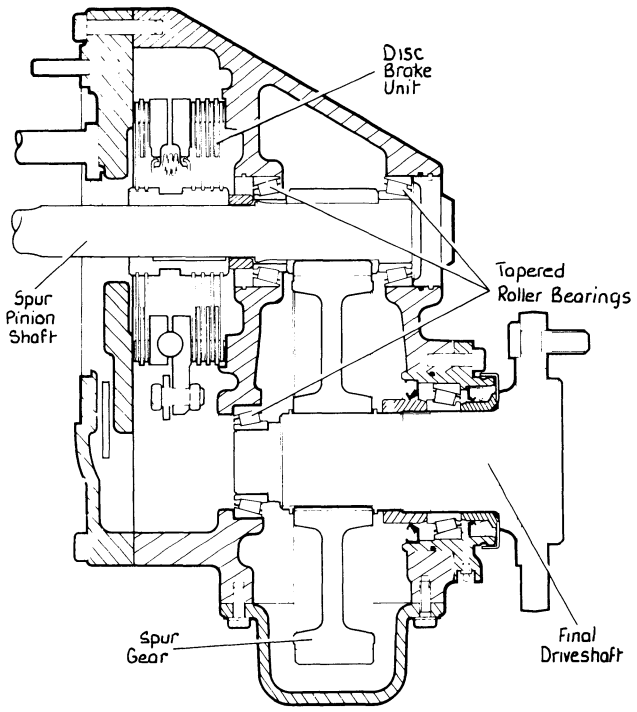

FIGURE D5. REDUCTION UNIT ASSEMBLY

To remove bearing from housing, lever out seals and discard-seals will be distorted by removal and should be renewed—then press bearing out of housing.

Spur Pinion Shaft Removal

Having removed brake mechanism and final driveshaft, remove circlip from spur pinion bearing cover then tap splined end of pinion with a soft-faced hammer or wooden block, to push shaft, outer bearing and cover out of case.

Outer track of inner bearing will remain in case and can be removed by tapping inwards with a soft drift.

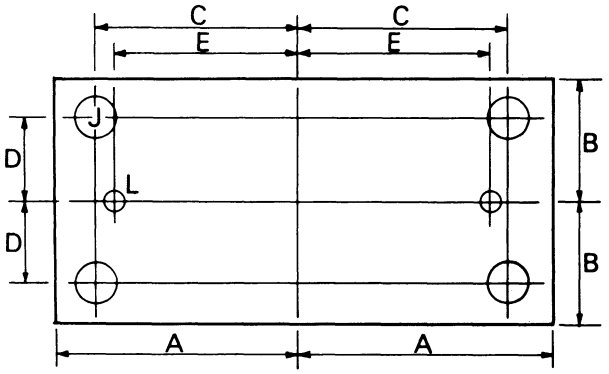

FIGURE D6. JACKING PLATE—FINAL DRIVES

A. 114.3mm ($4\frac{1}{2}$in)
B. 57.1mm ($2\frac{1}{4}$in)
C. 93.7mm ($3\frac{11}{16}$in)
D. 38.9mm ($1\frac{17}{32}$in)
E. 85.7mm ($3\frac{3}{8}$in)
J. Drill 4 holes 20.5mm ($\frac{13}{16}$in) ø
*L. Drill 2 holes 11.1mm ($\frac{7}{16}$in) ø and tap $\frac{1}{2}$–16 BSF**

** Alternatively if BSF taps are not available, thread to suit jacking bolts, minimum 20mm ($\frac{1}{2}$in) ø.*

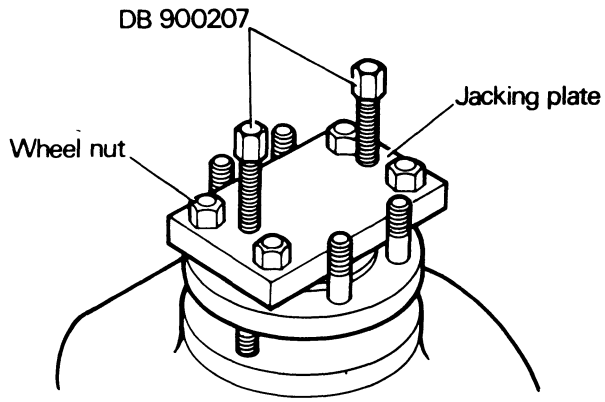

FIGURE D7—EXTRACTING FINAL DRIVES

Brake disc hub is keyed to spur pinion shaft and provided with a groove for extraction purposes.

To remove hub make plate to dimensions shown in figure D6 then attach plate to end of brake drum extractor (Service Tool K960618).

When refitting a hub ensure that bearing, distance piece and both keys are already on shaft; position hub with chamfered end of keyways towards gear then press hub hard against distance piece.

Replacing Spur Pinion Shaft

Ensure that track of inner bearing is in case bore, smear bearings with grease and fit shaft into case. Replace track of outer bearing then refit 'O' ring in case bore. Replace shims and cover before refitting circlip. As shaft bearings should have a pre-load, turn shaft to settle bearings then check that there is no end float: if there is, remove circlip and fit additional shims under cover. Ensure that cover circlip is correctly fitted in its groove.

Replacing Final Driveshaft

If collar has been removed from shaft, replace this, ensuring that the thin 'O' ring is first fitted on shaft. Replace bearing in housing then press inner seal into housing recess: ensure bearing is not distorted by being pressed into position and seal lip is towards outside of housing. Turn housing over and carefully press outer seal into position, also positioned with seal lip towards outside of housing and taking care not to distort seal.

Pack cavity inside seals with HMP grease, wipe inside of dirt shield then push housing onto driveshaft. Hold shaft flange in vice and screw locking ring on shaft: ensure that dirt shield is located on collar shoulder then tighten locking ring to clamp whole assembly together. Firmly tighten locking ring with special spanner, smear locking screw with Loctite (grade 270) then fit screw into the hole which comes opposite a spline groove. Firmly tighten locking screw. Replace circlip in shaft outer groove and fit 'O' ring into housing groove.

Smear shaft inner bearing with grease then fit bearing into case. Place gear inside case and fit shaft through case gear. Fit circlip on shaft end then fit shaft into bearing. Position seal housing so that grease nipple is towards rear and fit three housing bolts, in alternate holes. do not fit shims at this stage. Tighten bolts evenly to pull shaft into bearing and when bearing is seated against shaft shoulder, strike centre of shaft flange with a soft-faced hammer, to settle the bearings.

Driveshaft bearing setting

With shaft in position and inner bearing fully seated against shaft shoulder, tighten the three housing bolts evenly until bearings become tight enough to prevent shaft being 'rocked' against gear backlash. Do not overtighten bolts and distort housing flange but tighten evenly so that when a feeler gauge is inserted at three equally spaced points the gap is equal all the way round. Having measured gap between case and flange select shims that are 0.005in (0.12mm) less than gap then remove housing bolts and fit shims. Fit all six housing bolts and tighten evenly. The shaft bearings will then have the required amount of pre-load.

Having fully tightened housing bolts, check that circlip is placed in shaft groove at inside of gear then pump grease through housing nipple until seal cavity is filled and grease is forced past seal on inside of housing. Refit cover, using a new gasket.

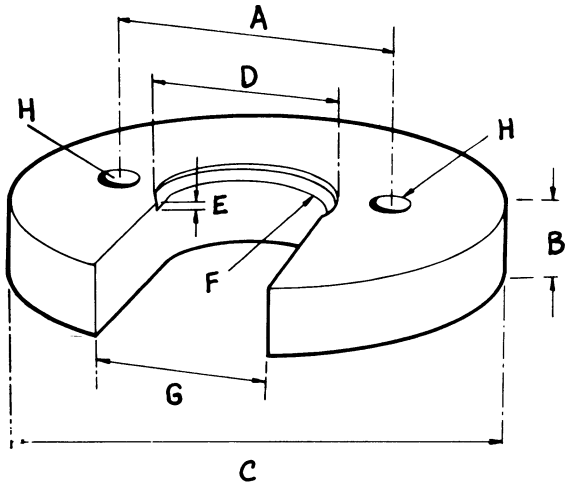

FIGURE D8.
TOOL FOR REMOVING DISC BRAKE HUB

A $4\frac{1}{8}$*in (105mm) centres*
B $\frac{3}{4}$*in (20mm)*
C $6\frac{3}{4}$*in (170mm) diameter*
D $3\frac{3}{32}$*in (79mm) diameter*
E $\frac{1}{8}$*in (3 2mm) recess*
F $\frac{1}{16}$*in (1 6mm) radius*
G $2\frac{21}{32}$*in (67 5mm)*
H $\frac{1}{2}$*UNC*

SPECIFICATIONS AND DATA—FINAL DRIVE REDUCTIONS

Reduction ratio	11/58
Oil capacity (each unit)	13 pints
Oil grade	Mobil 422
Spur pinion shaft bearing preload	0.001 - 0.003in (0.02 - 0.08mm)
Final driveshaft bearing preload	0.005 - 0.007in (0.13 - 0.18mm)
Spur wheel-to-pinion backlash (new)	0.006 - 0.010in (0.15 - 0.25mm)

Tightening torques

Housing to rear axle case nuts ($\frac{1}{2}$ UNC)	75 lb ft (10.5 kg metre)
Housing to reduction case bolts ($\frac{1}{2}$ UNC)	75 lb ft (10.5 kg metre)
Case rear cover bolts ($\frac{3}{8}$ UNC)	30 lb ft (4.2 kg metre)
Housing cover bolts ($\frac{3}{4}$ UNC)	9 lb ft (1.3 kg metre)
Oil seal housing to case bolts ($\frac{7}{16}$UNC)	50 lb ft (6.9 kg metre)
Drain plug ($\frac{1}{2}$ BSP)	60 lb ft (8.4 kg metre)
Driveshaft locking ring ($3\frac{3}{8}$in special)	75 lb ft (10.5 kg metre)
Wheel nuts ($\frac{3}{4}$ UNF)	150 lb ft (21 kg metre)

HOW IT WORKS—BRAKE MECHANISM

The disc brake units are mounted inside the final drive housings and operate on the spur pinion shafts. They consist of an actuator, four stationary plain discs and six rotating discs with sintered friction facings. The actuating units consist of two actuating plates, held together by tension springs and separated by six steel balls. The steel balls sit in recesses with inclined seats and the plates are connected by linkage to the brake pedals. When the brake pedal is depressed the operating linkage turns the actuator plates towards each other. The steel balls therefore roll up the inclined seats, which pushes the plates apart and clamps the two sets of plates (stationary and revolving) together to give a braking action.

The actuators have a revolving disc at each side of them and when the actuator expands to clamp the plates together the revolving plates tend to turn the actuator in the same direction. The two actuator plates are, therefore, restrained from turning by lugs on plates contacting a housing stop. As the actuator plates turn, the trailing plate lug contacts the housing stop but the leading plate is allowed to remain free. The leading plate thus tends to turn, relative to the trailing plate, which applies the brakes harder without additional pedal pressure being required The brakes are therefore self-energising, which allows maximum braking effort to be obtained with very light pedal pressure

When the brake pedal is released the linkage turning the actuator plates is released The pull-off springs then pull the actuator plates together and the discs are allowed to run free.

As it is necessary for the brakes to be capable of independent operation for turning purposes, separate pedals and linkage are used for each side For normal braking a third pedal is provided, which operates both brakes through a compensating linkage Even braking is thus obtained irrespective of any difference in adjustment caused by using the brakes independently

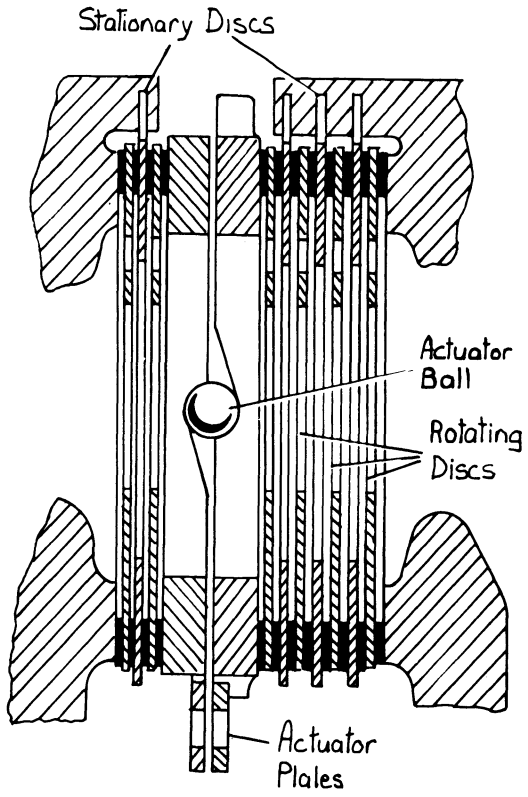

FIGURE F2 ACTUATOR AND DISCS

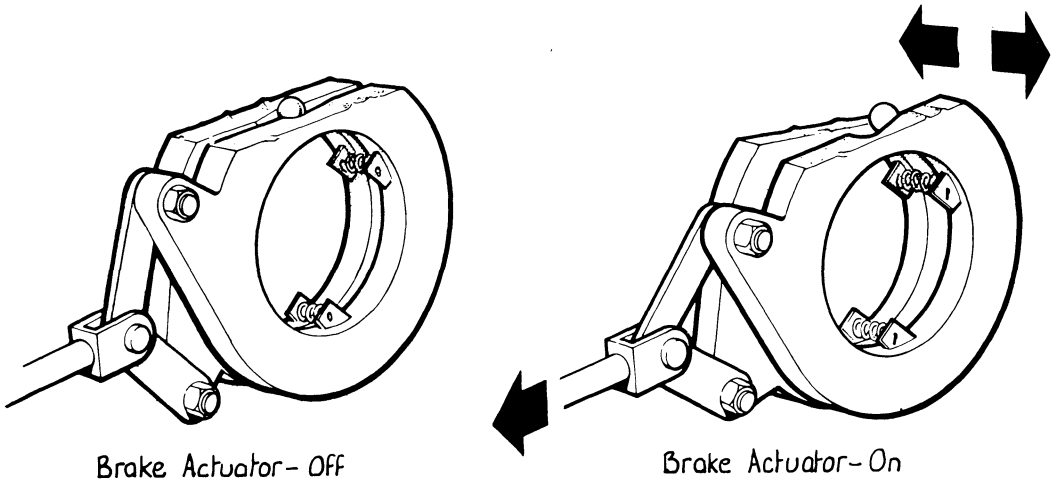

FIGURE F1 BRAKE ACTUATOR

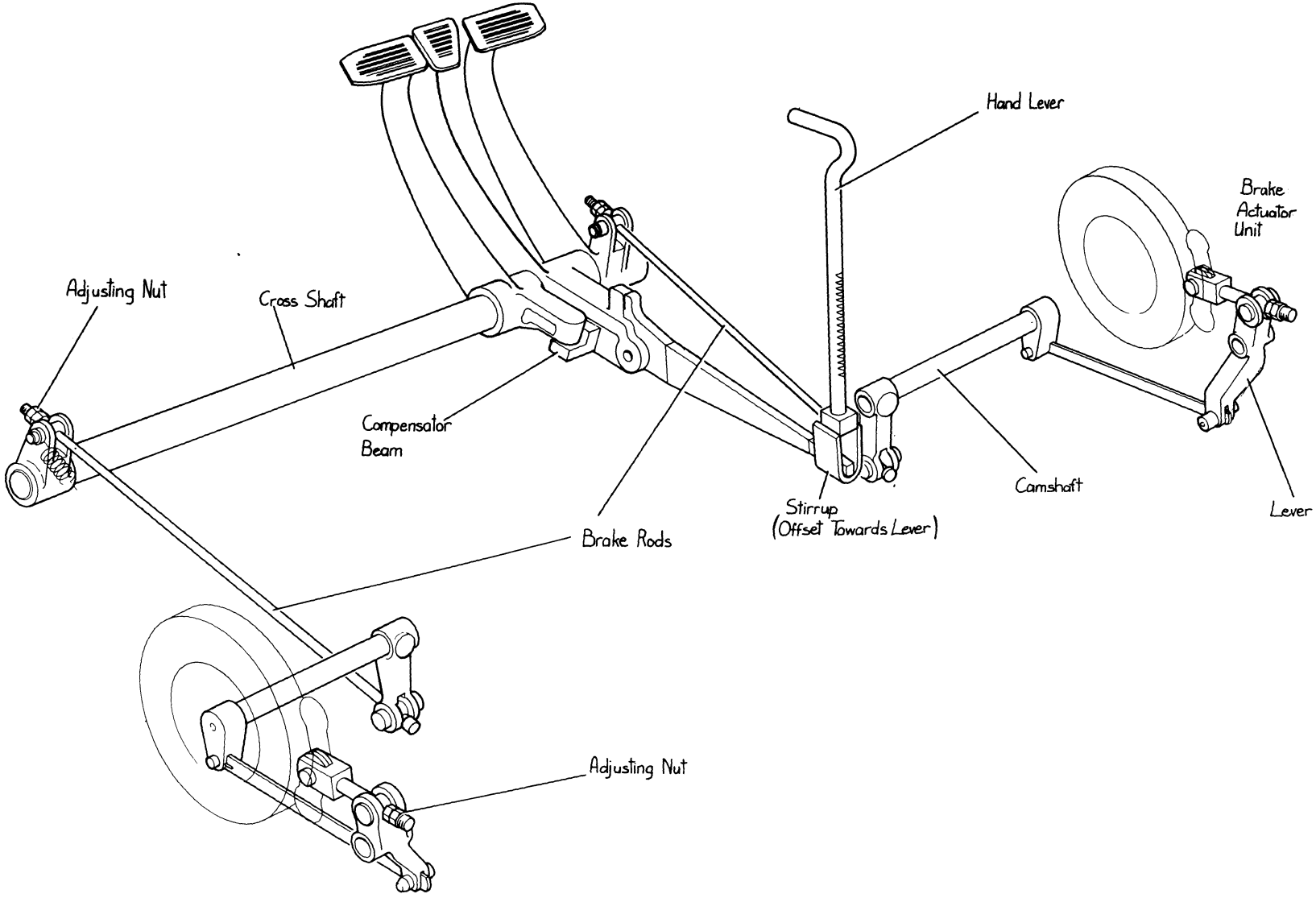

FIGURE F3. ARRANGEMENT OF BRAKE MECHANISM

UNIT REMOVAL AND REPLACEMENT

Disc Brake Units

As the discs are housed inside the reduction case it is necessary to first remove the complete reduction unit from the tractor (see page D2).

Turn reduction unit so that it is supported on drive-shaft flange and pinion shaft is pointing upwards. Remove four bolts from housing cover then extract clevis pin from connecting link: pin should not be tight but is threaded $\frac{1}{4}$ UNC so that one of cover bolts may be screwed into pin to assist extraction. Remove the thirteen bolts attaching housing to reduction case then lift off housing, with link and camshaft, to expose brake mechanism. Remove discs and actuator then remaining discs and lay them on bench in order of removal.

To dismantle actuator, remove fork pin to disconnect linkage then remove tension springs. Plates can then be separated, taking care of the six steel balls.

Assembling the brake mechanism

Lay an actuating plate on bench with ball seats uppermost. Place all six balls in their seats then place other actuating plate on top of balls. Ensure that connecting links are in their correct position and all the balls are seated in both plates then fit new pull-off springs and reconnect links to fork.

Place an inner disc on splined hub followed by an outer plain disc Repeat this with two more pairs of plates then fit an inner plate this should make four inner plates and three outer plates Replace actuator followed by an inner plate, outer plate and finally another inner plate

Check that discs, actuator and linkage are correctly assembled and operating lever is quite free. Fit a new gasket on case, check that connecting link is in position in housing then fit housing on case. Tighten bolts evenly then refit clevis pin through connecting link before refitting reduction unit.

Disc hub

This is keyed to spur pinion shaft and need not be removed unless it is to be renewed. To remove hub from shaft make a plate to the dimensions shown in figure F5 then bolt brake drum actuator (Service Tool K960618) to plate and pull hub from shaft. Before replacing hub, ensure that both keys are in position on shaft and place chamfered end of hub keyways against keys then press hub on shaft until it is firmly against distance piece.

Brake Cross Shaft and Pedals

The brake cross shaft passes through a tube in tractor main frame and is supported by a bush at each end of tube. To remove cross shaft disconnect wires from stop lamp switch and brake rods from pedal and left-hand lever. Remove circlip from right-hand end of shaft and pin from left-hand pedal then top shaft out from right-hand side. Pedals and operating lever can then be removed.

Place in reverse order of removal, ensuring that centre and right-hand pedals are free on shaft and operating lever is entered into hand brake lever stirrup before cross shaft is pushed through pedals

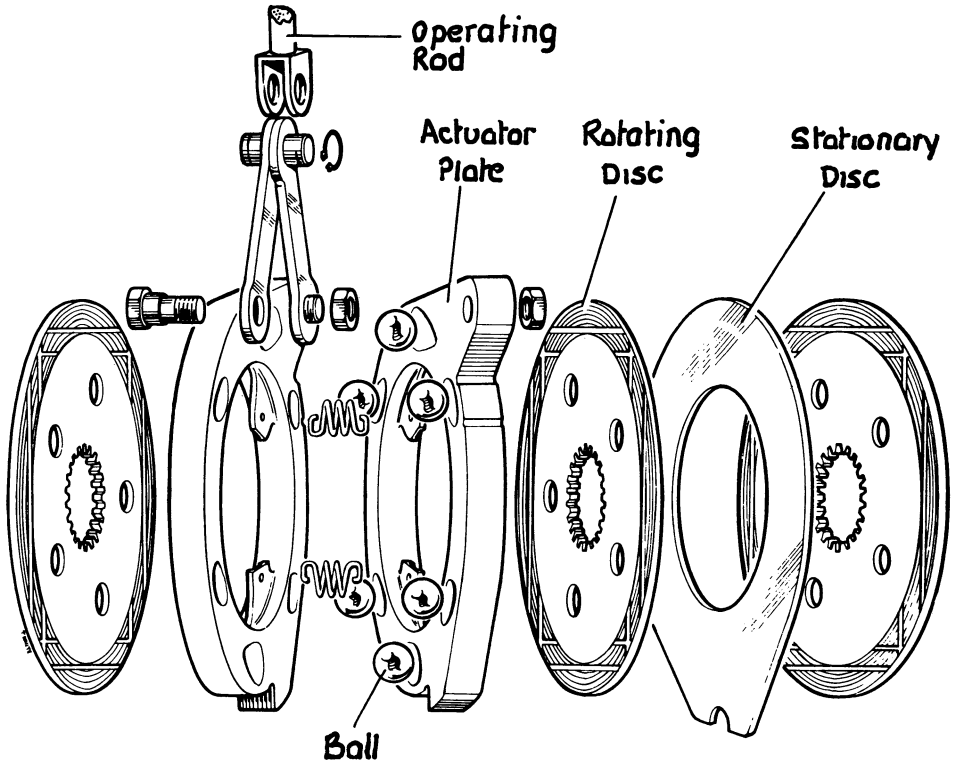

FIGURE F4 BRAKE ACTUATOR AND DISCS

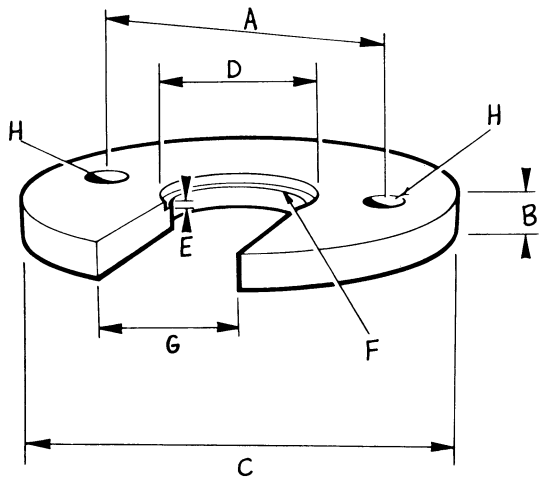

FIGURE F5.
TOOL FOR REMOVING DISC BRAKE HUBS

A $4\frac{1}{8}$*in (105mm) centres*
B $\frac{3}{4}$*in (20mm)*
C $6\frac{3}{4}$*in (170mm) diameter*
D $3\frac{3}{32}$*in (79mm) diameter*
E $\frac{1}{8}$*in (3 2mm) recess*
F $\frac{1}{16}$*in (1.6mm) radius*
G. $2\frac{21}{32}$*in (67.5mm)*
H $\frac{1}{2}$*UNC*

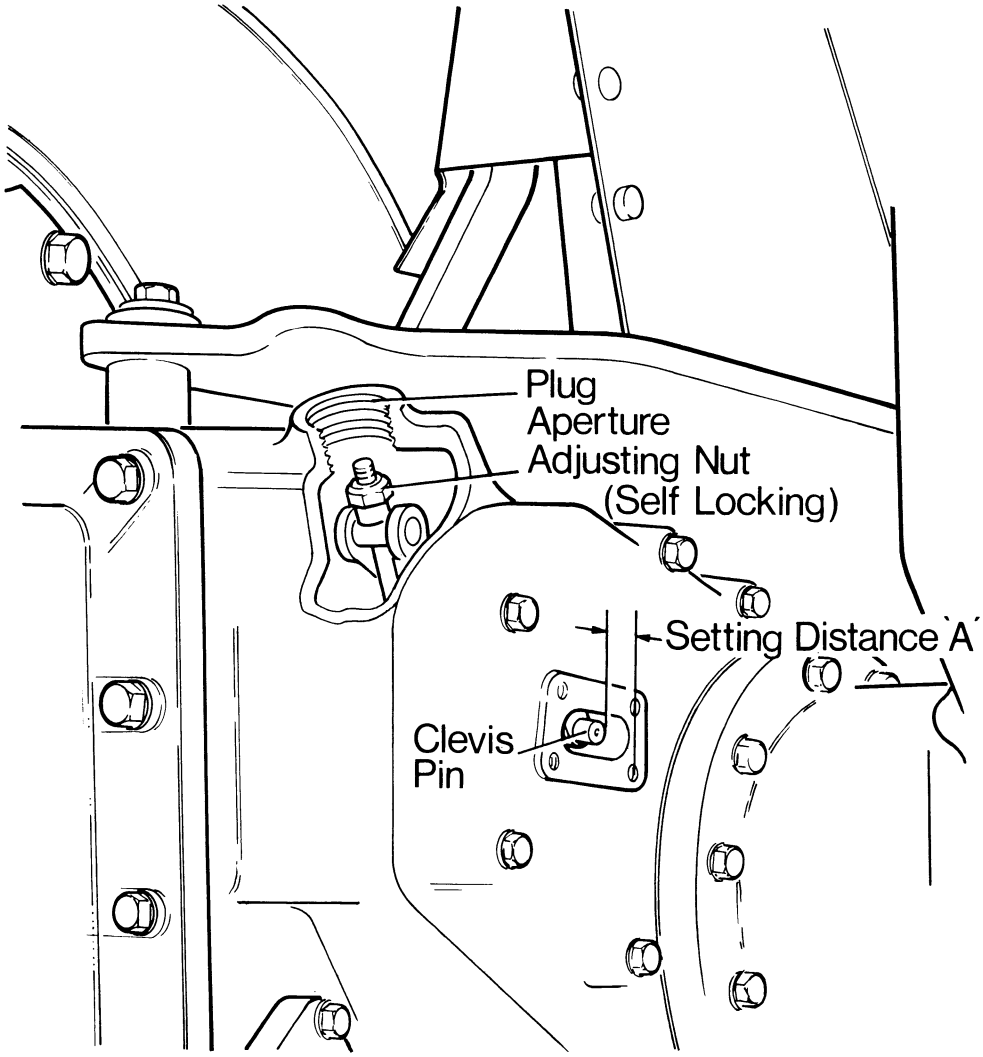

A. 25mm ±1mm (1in±$\frac{1}{32}$in)

FIGURE F6 BRAKE ADJUSTMENT

Lubrication

Grease fittings are provided on the centre pedal, compensator beam, left-hand pedal and brake housing; these should be lubricated every 60 hours. The cross-shaft bushes are oil impregnated and do not require lubricating in service.

Adjustment

To ensure adequate pedal travel as the brake discs wear, the initial travel has been reduced to 32 to 38mm (1¼ to 1½in). This requires a revised method of setting as follows:—

1. Place tractor on level ground and block wheels to prevent tractor movement.

2. Release handbrake fully then release bolts securing stop plate to right-hand footplate. Hold centre pedal upright (to ensure that pedal and operating lever are in line) then slide stop plate up to pedal and tighten bolts.

3. Clean dirt from rear and inner faces of reduction housings then remove cover plates and blanking plugs to reveal the clevis pins and adjusting nuts—Fig. F6.

4. Draw a line between the centres of the front stud holes, and measure the distance between this line and the front edge of the clevis pin. This should be 25mm (1in), if incorrect, adjust as described in operation 5, if correct proceed to operation 6.

NOTE: If the user has attempted to compensate for brake wear by adjusting the external pull rods, or if the tractor is an early model set to 65mm (2½in) pedal travel, the clevis pin setting will not be 25mm (1in). It is therefore, essential to carry out this check before attempting to adjust mechanically operated brakes.

5. Unscrew the internal adjusting nuts 3 full turns, then with the pedals fully up, adjust the length of the external pull rods (by their adjusting nuts at the cross shaft under the foot plates—Fig. F7) until the clevis pin setting is 25mm (1in). When set, lock these adjusting nuts and do not disturb again. This setting is not affected by brake wear.

6. When the clevis pin is correctly adjusted, screw down the internal self-locking adjusting nuts until a pedal travel (full off to full on) of 32 to 38mm (1¼ to 1½in) is obtained.

7. Repeat operations 4 to 6 on opposite side then refit cover plates and blanking plugs to reduction housings.

On tractors with correctly set clevis pins, any brake wear should be taken up by adjusting the internal self-locking adjusting nuts ONLY, to give the correct pedal travel.
Even with correctly adjusted brakes and the approved final drive lubricant, brake grab or fierceness sometimes occurs. This has been found to happen when the disc housing is deeper than normal. It is often possible to correct this condition by installing an additional stationary steel disc as follows:

Having set clevis pin position on both brake units, check that brakes are equally adjusted by depressing the centre pedal

Check the clearance at 'C'—Fig. F8, with the brakes clean and dry and with serviceable discs in good condition. Only if the clearance exceeds 3.12mm (0.123in) fit a extra stationary steel disc, K945755 as shown at 'D'. With this disc added, depth 'C' must not be less than 0.43mm (0.017in).

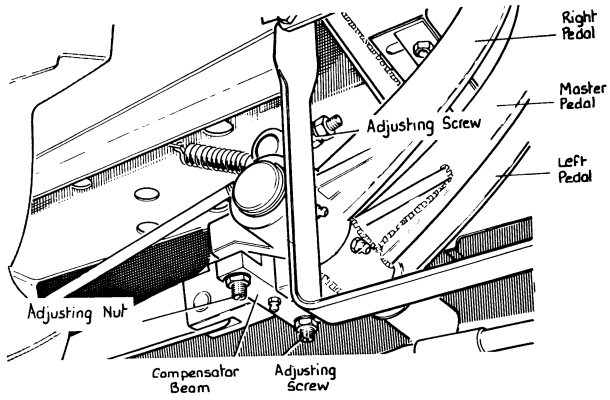

FIGURE F7. EXTERNAL PULL ROD ADJUSTMENT

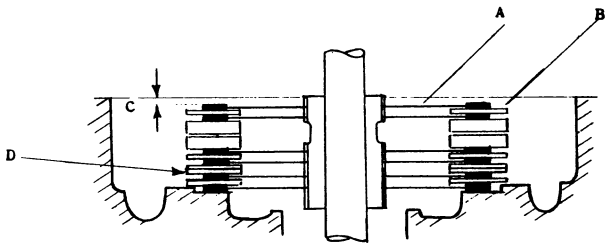

A Rotating (Bronze) plate
B Stationary (steel) plate
C Clearance of brake plate below housing joint
D Additional steel plate K945755

FIGURE F8. DISC BRAKE ASSEMBLY

SPECIFICATIONS AND DATA—BRAKE MECHANISM

Brake type	wet discs
Brake operation	foot operated through independent pedals or together using central master pedal
Disc diameter	22.2cm ($8\frac{3}{4}$in)
Number of rotating discs	6 per side
Friction area (total)	2683cm^2 (416in^2)
Rotating disc dimensions:	
Thickness (new)	4.9–4.75mm (0.193–0.187in)
Parallelism of Friction faces (max out of true)	0.075mm (0.003in)
Flatness of Friction faces (max out of true)	0.125mm (0.005in)
Radial groove depth (min)	0.125mm (0.005in)
Stationary disc dimensions:	
Thickness (new)	2.7–2.6mm (0.106–0.101in)
Parallelism of Friction area (max out of true)	0.075mm (0.003in)
Flatness of Friction area (max out of true)	0.205mm (0.008in)
Flatness of non-Friction area (max out of true)	0.380mm (0.015in)

HOW IT WORKS—HYDRAULIC BRAKING SYSTEM

NOTE: This information does not apply to tractors fitted with brakes to all four wheels.

The disc brake units are identical to those fitted to non-'Q'-cab tractors except that they are hydraulically operated using a mineral oil system. Cylinders are colour coded with a blue band and only mineral oil type replacement components available from DB Parts Dept., must be used.

> **DANGER**—The only fluid approved for use in brake and clutch reservoirs is Shell Tellus 27—this is clearly marked on the reservoir covers. Fluids normally described as brake fluids, power steering fluids, automatic transmission fluids or universal tractor oils are definitely **NOT** compatible and **MUST NOT** be used.

A single reservoir supplies separate master cylinders for right-hand and left-hand circuits. The master cylinders provide free return of oil to the reservoir when the pedal is released. Slave cylinder retraction is by external return springs.

Brake master cylinders are mounted to the right-hand side of the bulkhead and the slave cylinders are externally mounted on the final drives. There is no residual pressure maintained in the system when brakes are released.

A brake balance valve is fitted beneath the cab. This contains a piston with limited travel, one end of which is connected to the left-hand circuit and the other to the right-hand circuit. As no oil can pass this piston the brakes will operate independently when the pedals are disconnected but when connected for road work the piston will move to balance pressure in both brake circuits.

This accommodates slight variation in brake wear between the left-hand and right-hand side.

UNIT REMOVAL AND REPLACEMENT

Brake Master Cylinders—Fig. F9

Cylinders may be removed individually after disconnecting inlet pipe, outlet pipe and pedal push-rod.

Replace by first bolting cylinder to bulkhead then set position of fork on push rod so that with both pedals locked together and in the fully off position, the holes in fork and pedal are exactly opposite permitting the clevis pin to be fitted without moving the cylinder piston. Refit inlet and outlet pipes, top up reservoir with Shell Tellus 27 fluid, then bleed the system (page F8,).

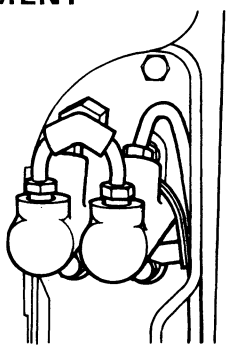

FIGURE F9. BRAKE MASTER CYLINDER

Brake Slave Cylinders—Fig. F10

The slave cylinders are mounted on the final drive units. To remove, first disconnect the return spring and remove clevis pin, disconnect brake pipe then remove two nuts and bolts securing cylinder to final drive unit.

Replacement is the reversal of the removal procedure except that the reservoir should be topped up with Shell Tellus 27 fluid and the system bled (page F8).

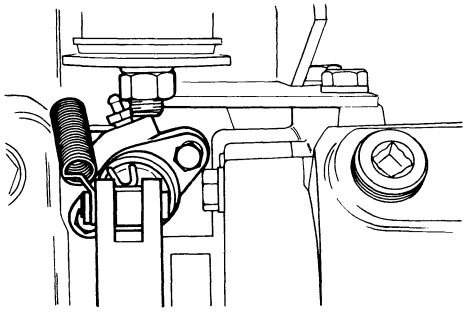

FIGURE F10. BRAKE SLAVE CYLINDER

Brake Balance Valve—Fig. F11

The brake balance valve is mounted beneath cab on the front cross member. To remove, note the positions of and disconnect the two flexible brake pipes. Disconnect the two rigid brake pipes and remove the two bolts securing the valve to the cross member.

Replacement is the reversal of the removal procedure except that the reservoir should be topped up with Shell Tellus 27 fluid and the system bled (page F8,).

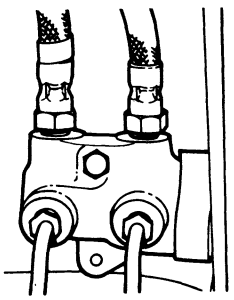

FIGURE F11. BRAKE BALANCE VALVE

Maintain oil level in reservoir to full mark using only Shell Tellus 27 hydraulic fluid.

If any loss of fluid occurs from the system rectify the cause immediately. Ensure that pedals have a firm feel without sponginess and adjust brakes well before pedals can be bottomed.

Ensure that brake pipes do not chafe against tractor chassis, note that cab can move relative to chassis in normal operation.

Adjustment—Fig. F12

1. Block front wheels securely and raise one rear wheel clear of the ground, supporting tractor with a stand. Release handbrake fully and ensure that brake slave cylinders are fully retracted and are not being restricted by the handbrake cables.

2. Remove access plug from rear of final drive unit. Tighten adjusting nut until brake just locks the wheel then slacken exactly $2\frac{1}{2}$ turns.

3. Repeat adjustment on opposite wheel, lower tractor to the ground.

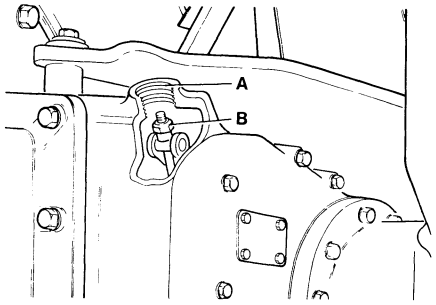

FIGURE F12. BRAKE ADJUSTMENT

Check to ensure that hand brake is fully applied on 3rd ratchet from off position. If necessary adjust cables at compensator bar ensuring that bar remains level.

Check that there is equal travel on left-hand and right-hand brake pedals when operated independently, and road test to ensure brakes operate evenly when pedals are connected together. Make fine adjustments if necessary, replace access plugs.

If brakes do not operate evenly after carrying out the above adjustments, check the operation of the balance valve as follows: If valve is functioning correctly it will be found that when the pedals are operated separately, but with one foot on each pedal, it will be possible to lift the right-hand pedal by pushing down on the left-hand pedal and vice versa. If this action cannot be obtained the balance piston is seized.

NOTE: The balance valve is only obtainable as a complete assembly.

Brake Bleeding

Brake bleeding should be carried out with the pedal lock disconnected, and each side bled separately. Release the bleed screws (these are 13mm and can be released without removing the dirt shield) fitted at the top of the slave cylinders and bleed as follows:

Attach a 1 metre length of 5mm bore plastic or nitrile rubber tube to the bleed screw and immerse the free end in a clean jar containing Shell Tellus 27 fluid.

Slacken the bleed screw while an assistant pushes the pedal slowly over full length of travel but tighten bleed screw before pedal bottoms, release pedal.

Repeat this procedure, maintaining the reservoir full of clean Shell Tellus 27 fluid until no air bubbles are appearing from end of tube. Tighten bleed screw (do not overtighten) and repeat the procedure on other side. If the system has been drained it is possible to fill the system by pumping fluid through the bleed tube with a pressure oil-can filled with Shell Tellus 27 fluid (and kept specially for this purpose). Fill half the reservoir through one slave cylinder and the remainder through the opposite cylinder. The oil-can must not be removed from the bleed tube or allowed to empty during the filling cycle as this will introduce air into the system. If the pedals are firm in operation after filling in this way, no further bleeding will be required.

Brake System Faults

If the pedals remain spongy after correct bleeding, or if sponginess returns in service, isolate the slave cylinder from the master cylinder using a Girling T3 hose clamp on the flexible brake hose. If sponginess is eliminated with the clamp fitted, air is entering the slave cylinder past the seals. If sponginess remains the master cylinder or reservoir connections may be at fault Brake drag or failure to release fully may be caused by faulty slave cylinder seals or by an incorrectly adjusted master cylinder push rod.

Even with correctly adjusted brakes and the approved final drive lubricant, brake grab or fierceness sometimes occurs. This has been found to happen when the disc housing is deeper than normal. It is often possible to correct this condition by installing an additional stationary steel disc as follows:

Check the clearance at 'C'—Fig. F13 with the brakes clean and dry and with serviceable discs in good condition. Only if the clearance exceeds 3.12mm (0 123in) fit an extra stationary steel disc, K945755 as shown at 'D'. With this disc added, depth 'C' must not be less than 0.43mm (0.017in).

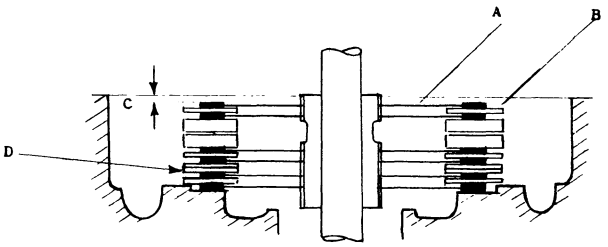

FIGURE F13. DISC BRAKE ASSEMBLY

SPECIFICATIONS AND DATA
HYDRAULIC BRAKING SYSTEM

Brake type	wet disc
Brake operation	foot operated through Girling mineral type hydraulic cylinders, using independent pedals or together using pedal lock
Hydraulic brake fluid	Shell Tellus 27
Number of rotating discs	6 per side
Friction area (total)	2683cm² (416in²)

Rotating disc dimensions

Thickness (new)	4.9–4.75mm (0.193–0.187in)
Parallelism of Friction faces (max out of true)	0.075mm (0.003in)
Flatness of Friction faces (max out of true)	0.125mm (0.005in)
Radial groove depth (min)	0.125mm (0.005in)

Stationary disc dimensions

Thiskness (new)	2.7–2.6mm (0.106–0.101in)
Parallelism of Friction faces (max out of true)	0.075mm (0.003in)
Flatness of Friction area (max out of true)	0.205mm (0.008in)
Flatness of non-Friction area (max out of true)	0.380mm (0.015in)

Power Take-Off

POWER TAKE-OFF

1410, 1412 TRACTORS

CASE CORPORATION

Pub 9-37181

Printed in U.S.A.

CONTENTS

SECTION	DETAILS	PAGE
Multi-speed PTO		
Unit Maintenance and Repair		
	Disassembly	J1
	Assembly	J1
Single-speed PTO		
Unit Maintenance and Repair		
	Disassembly	J3
	Assembly	J3
Reversible Shaft PTO		
	Removal and Installing	J5
	Illustration of Parts	J6
	Disassembly	J7
	Inspection	J8
	Assembly	J8
	Adjustment	J10
	Control Lever and Selector	J11
	Data	J12
	Special Tools	J12

UNIT MAINTENANCE AND REPAIR—MULTI-SPEED POWER TAKE-OFF UNIT

Dismantling Power Take-Off Unit

Having removed unit from tractor, first tip out any oil remaining in case then place unit on bench.

Remove rear cover, taking care of the bearing shims so that they can be refitted as removed. Push the top shaft rearwards out of case: the rear bearing bore being just large enough to allow gear to pass through

Whilst using a lever to hold the selector stationary otherwise it may jam on rod-tap the selector rod rearwards out of the case: be prepared to catch the detent ball and spring which will be released as rod is withdrawn Lift out the selector after removing selector rod.

Using a suitable punch on shaft end carefully tap output shaft rearwards out of case. Push rear bearing out of case then allow gear to rest against case whilst shaft is tapped out of front bearing and gear When shaft has been removed, lift gear and bearing through top of case.

Assembling Power Take-off Unit

If the front bearing tracks have been removed ensure that these have been refitted and tapped firmly against their bore shoulders

Smear output shaft rear bearing with grease then place it in its outer track Fit change speed gear in case, larger gear to front, then fit output shaft through case and gear Push shaft through until it comes against rear bearing then carefully tap shaft end with a soft-faced hammer until it is pushed into bearing Replace outer track of rear bearing

Place selector fork in vice and replace detent spring and ball. Hold ball against spring with a screwdriver so that a short piece of $\frac{7}{16}$in (12mm) diameter rod—a bolt shank is satisfactory—can be pushed into selector to hold ball against its spring. Fit selector fork in gear and engage it in operating lever then push selector rod through rear of case. Allow rod to enter selector fork then whilst holding fork stationary push rod through fork and over detent ball guide rod will be pushed out of fork at same time and can be retrieved. Push selector rod fully into case, compressing circlip so that it enters recess in case face.

Replace input shaft; passing it through rear of case until it seats in front bearing then replace outer track of rear bearing.

If cover oil seal is to be renewed, carefully press a new seal into cover bore Position seal lip towards inside of cover and press seal in until it is level with inner face of cover.

Replace shims in end cover, a smear of grease will help retain them in position Smear cover face with grease then fit a new gasket in position on cover. Pack inside of oil seal with grease and refit cover, taking special care not to cut the seal lip on shaft splines

Tighten cover bolts and nuts evenly, bolts to 20 lb ft (1 2 kg metre) and nuts to 50 lb ft (3 4 kg metre) then check that shafts rotate freely and have 0 002 to 0 004in (0.05 to 0 10mm) end float If necessary remove cover and adjust end float by removing, or adding, shims.

Check that speed change lever operates correctly then refit PTO shaft cover

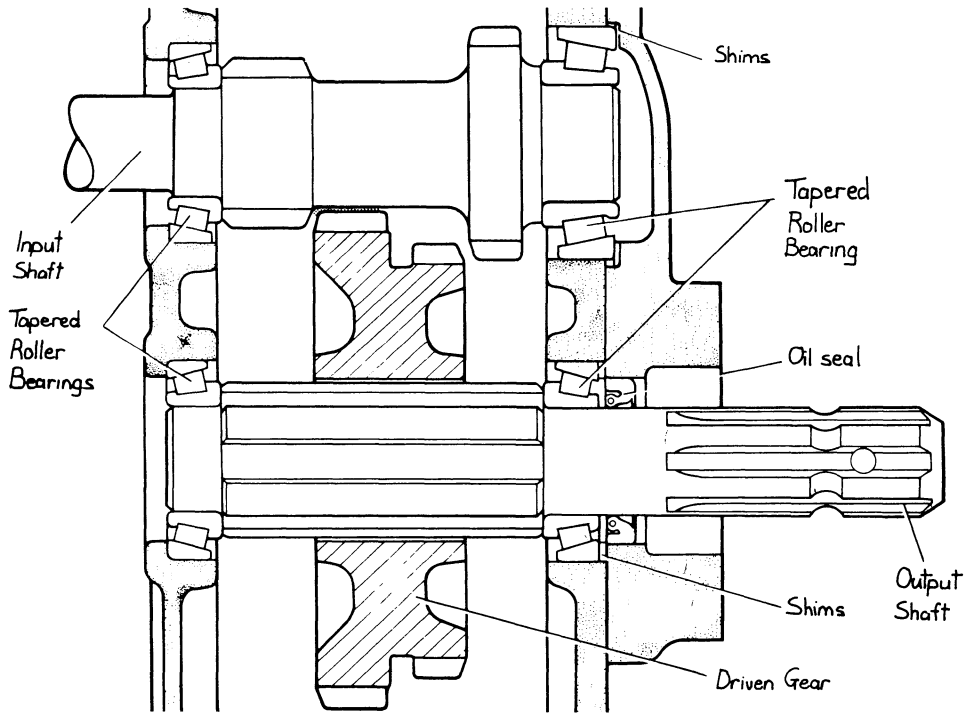

FIGURE J1 GEARS AND SHAFTS - MULTI-SPEED PTO

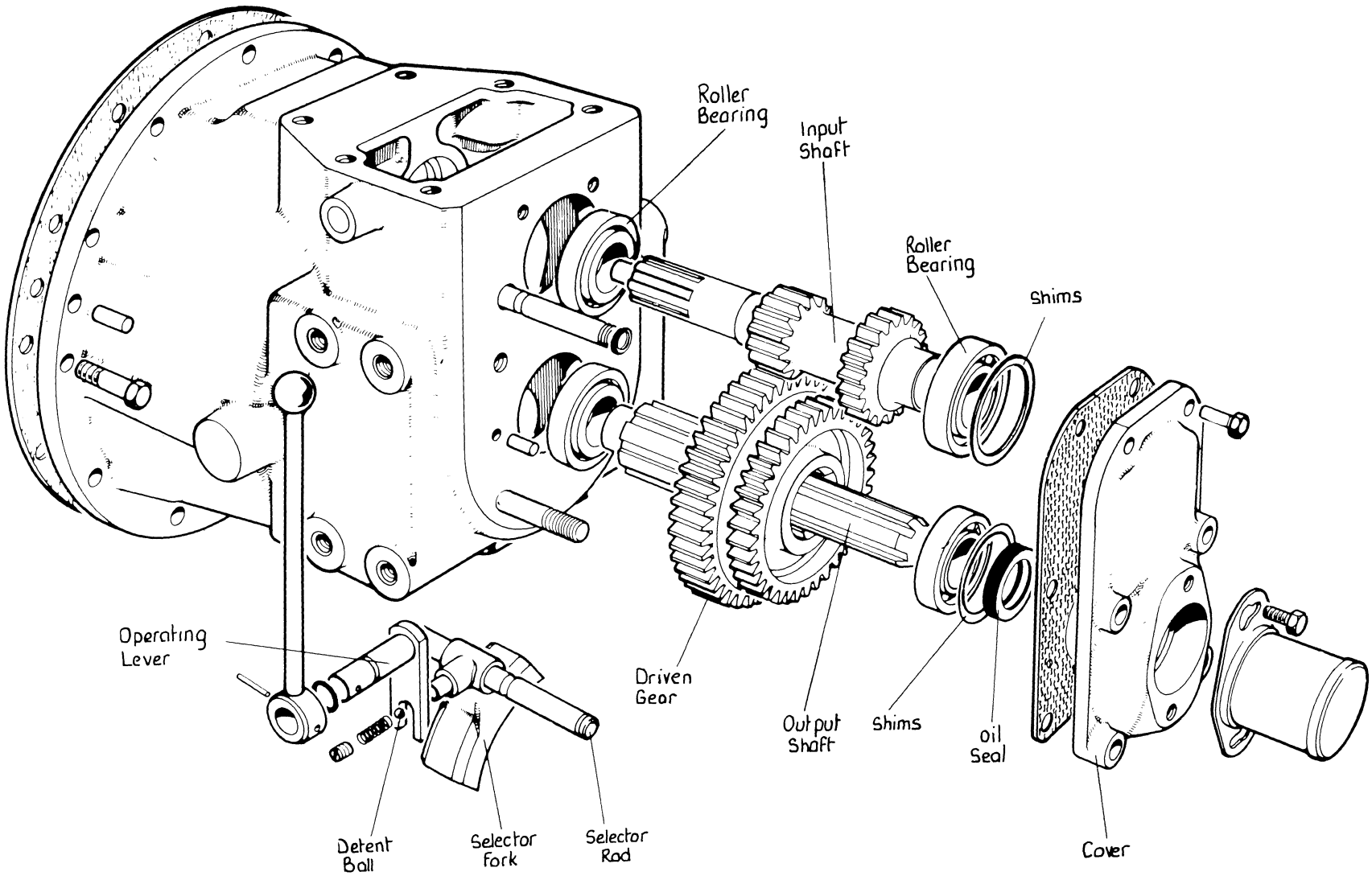

FIGURE J2 COMPONENTS OF MULTI-SPEED POWER TAKE-OFF

UNIT MAINTENANCE AND REPAIR—SINGLE-SPEED POWER TAKE-OFF UNIT

Dismantling Power Take-off Unit

Having removed unit from tractor, first tip out any oil remaining in case then place unit on bench.

Remove rear cover, taking care of bearing shims, then tap topshaft rearwards out of case. Remove oil reservoir from front of case then push selector rod out rearwards, hold selector fork stationary whilst doing this and prepare to catch detent ball, which will be displaced from selector fork when rod is removed.

Stand unit with its rear face over end of bench or packing case then, whilst an assistant is holding splined end of output shaft, tap shaft downwards out of case: do not use a large drift against shaft end as this is a separate thick washer but use a drift small enough to fit inside oil feed hole.

Having the case vertical will hold components central whilst shaft is driven out and enable them to be removed after withdrawing shaft take special care not to damage the needle rollers.

Assembling Power Take-off Unit

If front bearing tracks have been removed from case, ensure that these are refitted and tapped firmly against their bore shoulders.

Fit collar and sliding dog on gear: relieved end of dog teeth towards gear. Replace driveshaft inner bearing in case then fit gear inside case: collar towards bearing.

Smear needle roller bearings and distance piece with grease then place them on driveshaft distance piece between bearings. Turn shaft so that key is opposite keyway in collar then carefully push shaft into collar. Hold collar against gear, to keep needle rollers in place, then carefully tap shaft into bearing. When shaft has fully entered front bearing, tap outer track of rear bearing into case.

Place selector fork in vice and replace detent spring and ball. Hold ball against spring with a screwdriver so that a short piece of $\frac{7}{16}$in (12mm) diameter rod—a bolt shank is satisfactory—can be pushed through selector to hold ball against its spring. Fit selector fork in gear and engage it in operating lever then push selector rod through rear of case Allow rod to enter selector fork then whilst holding fork stationary push rod through fork and over detent ball guide rod will be pushed out of fork at same time and can be retrieved Push selector rod fully into case, compressing circlip on rod so that it enters recess in case.

If cover oil seal is to be renewed carefully press a new seal into cover bore. Position seal lip towards inside of cover and press seal in until it is level with inner face of cover.

Replace shims and distance piece against lower bearing track and fit topshaft bearing shims in cover recess a smear of grease will retain shims in position. Smear face of cover with grease then fit a new gasket in position on cover. Pack seal cavity with grease before fitting cover. Take special care not to cut seal on shaft splines and carefully work seal lip over shaft chamfer. Tighten cover bolts evenly then check that shafts rotate freely and with end float Shafts should have 0.002 to 0.004in (0.05 to 0 101mm) end float and can be adjusted by removing cover and removing shims to increase end float or adding shims to reduce end float

Replace oil reservoir and refit PTO shaft cover.

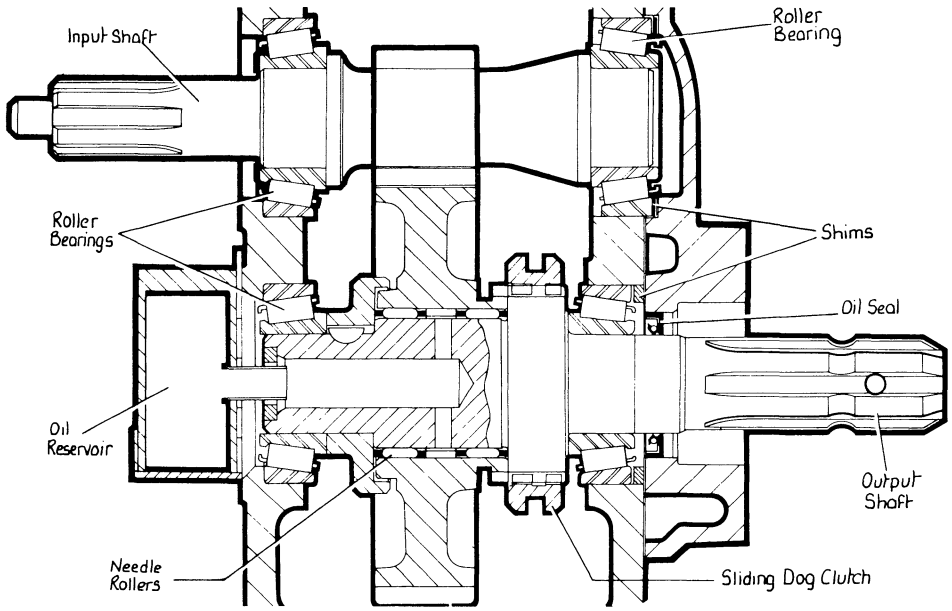

FIGURE J3 GEARS AND SHAFTS - SINGLE-SPEED POWER TAKE-OFF

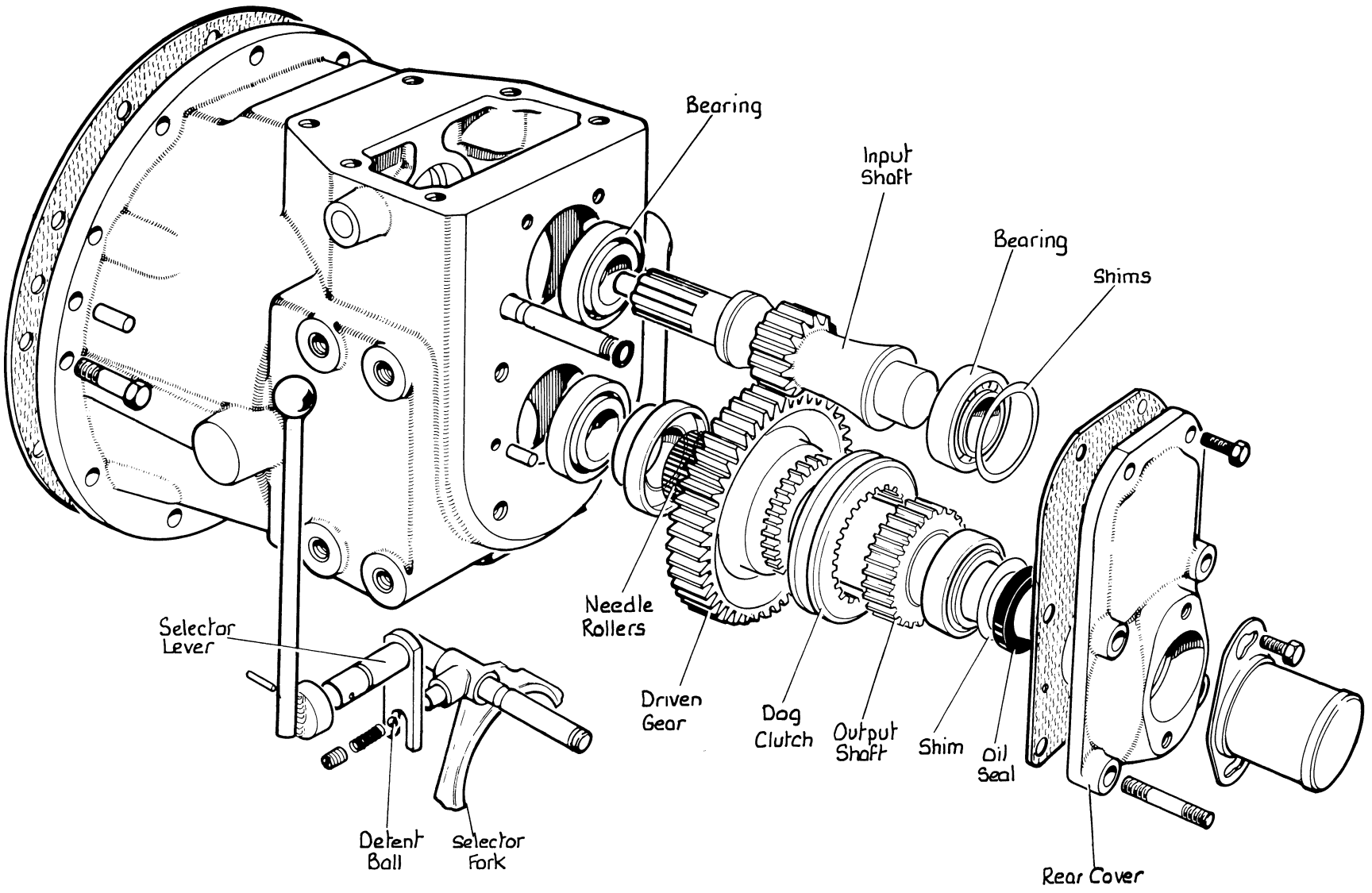

FIGURE J4. COMPONENTS OF SINGLE-SPEED POWER TAKE-OFF

Removing

1 Ensure that there is at least 2 metre (6 ft) of working space behind the tractor and that the floor is level
2 Drain transmission oil into a clean container with a capacity of more than 48 litres ($10\frac{1}{2}$ gallon). Make sure that dirt does not get into the oil.
3. If fitted, remove the bolts attaching the pipe support brackets to the PTO case and fasten the brackets and pipes out of the way with wire.
4 Support the drawbar and remove the eight setscrews which attach the hitch plates to the PTO case. Note the size and position of the shims fitted between the hitch plates and the PTO case
5. Lower the drawbar to the ground.
6. Support the PTO with suitable equipment and remove the setscrews which fasten the PTO to the rear axle case.

NOTE: A moveable hoist or trolley jack is essential as the cardan shaft (1500 mm–5 ft) long, will be withdrawn attached to the PTO.

7 Withdraw PTO, taking care that no strain is placed on the cardan shaft.

Installing

1 Reverse operations 3 to 7.
2. Re-fill transmission case with original oil but do not use the last gallon as this will contain sediment. Top up to level with clean oil.

Fig. J5

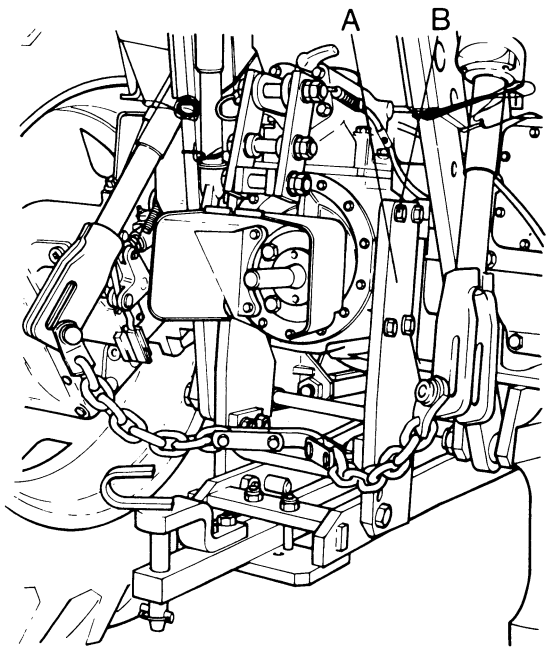

R77.62

A. Hitch Plate
B. Setscrews (Hitch plate to PTO casing)

Fig. J6

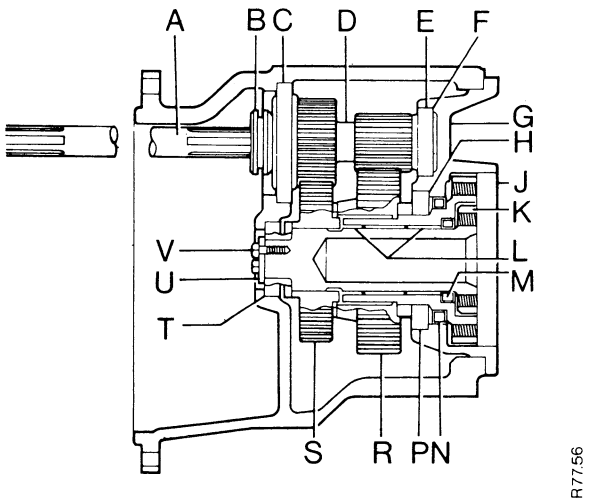

A. Cardan shaft
B. Dog clutch
C. Taper roller bearing
D. Input shaft 21/13 teeth
E. Taper roller bearing
F. Shims
G. End cover
H. Shims
J. Output shaft, low speed
K. Output shaft, high speed
L. Needle roller bearings
M. Oil seal
N. Oil seal
P. Taper roller bearing
R. Driven gear, low speed, 50 teeth
S. Driven gear, high speed, 43 teeth
T. Taper roller bearing
U. Bearing retainer
V. Setscrews

Disassembly

1. Pull the cardan shaft out of the input shaft bearing. If it is difficult to extract, stand the PTO unit on a piece of wood, cardan shaft upwards Obtain an assistant to take the weight of the cardan shaft, and tap the PTO case flange with a heavy soft-faced hammer at a point nearest to the shaft
2. Place PTO on bench with the end cover upwards.
3 Remove the thirteen setscrews and lift off the end cover.

NOTE: Attached to the end cover are the output shafts, bearings and both driven gears. This operation will be made easier by screwing two bolts into the tapped holes for the PTO guard and connecting them with wire to make a lifting handle.

4. Bend down tabs on tabwasher and remove the three setscrews and the bearing retainer.
5. Use a suitable puller and remove the bearing. Alternatively use a suitable puller and remove the 43 teeth driven gear which will force the bearing off its location.
6. Lift off the 43 teeth driven gear, the special washer, the needle thrust bearing, the 50 teeth driven gear and the two halves of the split ring.
7. Withdraw the high speed output shaft and remove the two needle roller bearings, the distance piece and the special washer.
8. Taking care not to damage the splines, press the low speed output shaft out of the end cover Alternatively use a soft-faced hammer and drive the output shaft out of the end cover

Fig. J7

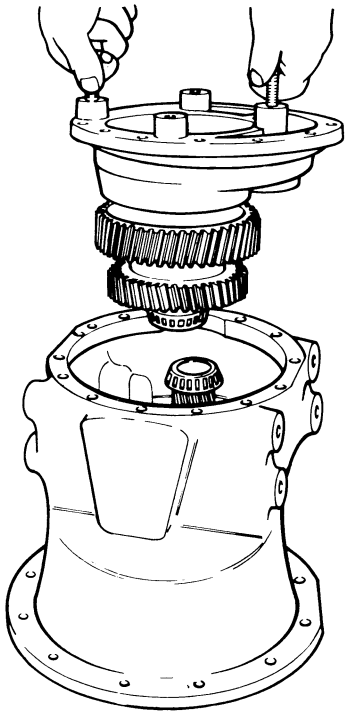

R77.61

Fig. J8

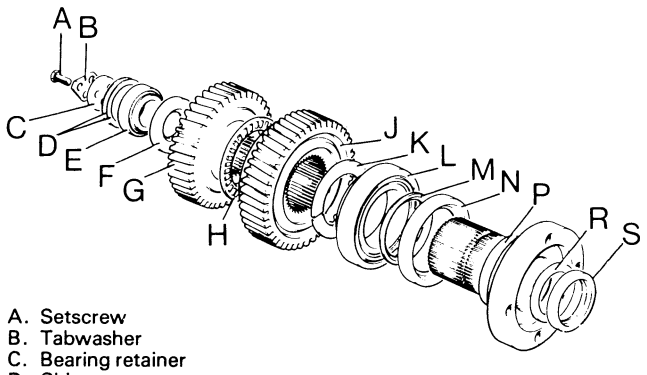

R77.59

A. Setscrew
B. Tabwasher
C. Bearing retainer
D. Shims
E. Taper roller bearing
F. Special washer
G. Driven gear (high speed)
H. Needle thrust bearing
J. Driven gear (low speed)
K. Split ring
L. Taper roller bearing
M. Special washer
N. Oil seal
P. Output shaft (low speed)
R. Special washer
S. Oil seal

Fig. J9

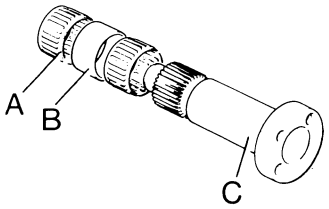

R77.60

A. Needle roller bearing
B. Distance piece
C. Output shaft (high speed)

Fig. J.10

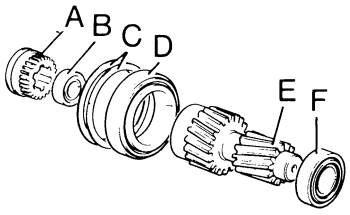

R77.58

A. Dog clutch
B. Ball bearing
C. Shims
D. Taper roller bearing
E. Input shaft
F. Taper roller bearing

Inspection

1. Check all bearings for damaged tracks and rollers and renew as necessary.
2. Check gear teeth for wear or damage and renew as necessary.

Assembly

1. Fit new oil seals to end cover and the low-speed output shaft. Grease both seal lips. The correct position for the output shaft oil seal is just contacting the special washer R.
2. Fit the low-speed output shaft into the end cover and place together on a firm surface with a wood block of suitable thickness supporting the output shaft flange.
3. Place the special washer M over the splines, chamfered side towards end cover and tap into position with a mild steel drift. Ensure that the special washer is seated against the register on the output shaft.
4. Place the taper roller bearing cone over the splines and tap into position with a mild steel drift. Do not oil the bearing.
5. Assemble the two halves of the split washers on to the output shaft and refit the low-speed driven gear.
6. Insert the high-speed output shaft into the low-speed output shaft and insert the two needle roller bearings with the distance piece between them. Oil the needle roller bearings with transmission oil before assembly.
7. Place the needle roller thrust bearing on to its seat on the low-speed driven gear and fit the high-speed driven gear and the special washer, F.
8. Tap the bearing into position and assemble the bearing retainer, tabwasher and setscrews. Do not oil the bearing.
9. Tighten the setscrews to 29.8 kg m (20 lb ft) and lock with the tabwasher.

Fig. J11

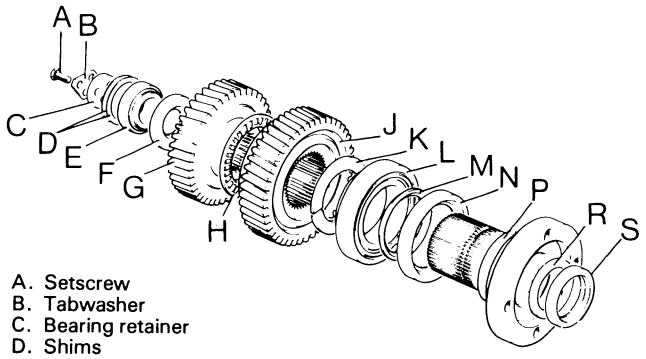

A. Setscrew
B. Tabwasher
C. Bearing retainer
D. Shims
E. Taper roller bearing
F. Special washer
G. Driven gear (high speed)
H. Needle thrust bearing
J. Driven gear (low speed)
K. Split ring
L. Taper roller bearing
M. Special washer
N. Oil seal
P. Output shaft (low speed)
R. Special washer
S. Oil seal

R77.59

Fig. J12

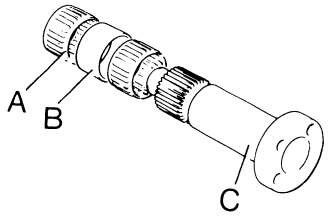

A. Needle roller bearing
B. Distance piece
C. Output shaft (high speed)

R77.60

10. Position PTO case with end cover flange upwards. Place the input shaft in position and press down firmly with a turning motion to seat the bearing rollers.
11. Smear the end cover face with Wellseal and place a new gasket in position.
12. Screw two setscrews, 7/16UNC, into the end cover to assist in handling, and lower the end cover with gears and shafts into position in the PTO case.
13. Tap the dowel into position and refit and tighten the thirteen end cover to PTO case setscrews to 29.8 kg m (20 lb ft).
14. Refit the dog clutch and place the lever in the engaged position to hold the dog clutch in position during handling
15. Refit the cardan shaft and the PTO guard
16. Pour some transmission oil into the PTO case and manipulate the casing to lubricate the bearings which were assembled dry.

Fig. J13

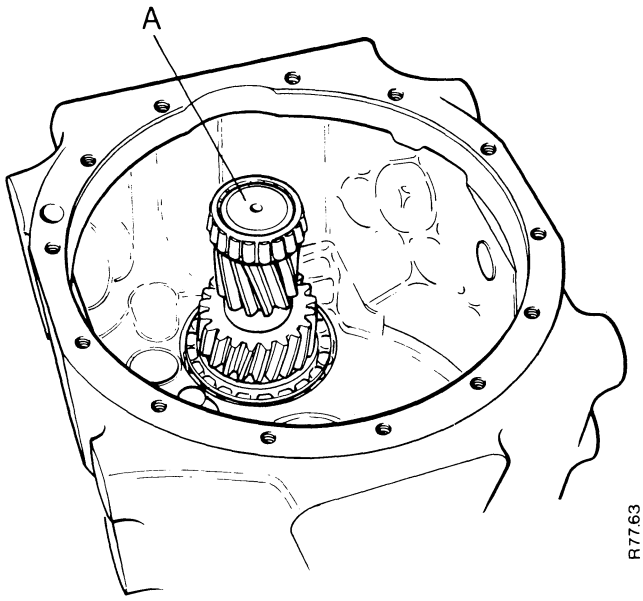

R77.63

Fig. J14

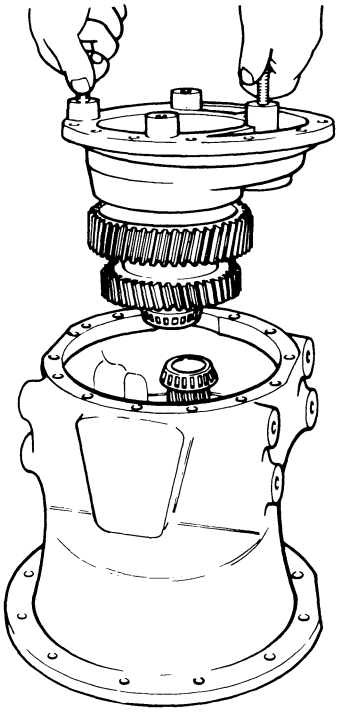

R77.61

Shaft end float adjustment

This adjustment must be made whenever new bearings, shafts or gears are fitted. The correct end float on both shafts in 0.05 to 0 10 mm (0.002 to 0 004 in) It is essential that the end float is accurately adjusted and must never be set at 0.05 mm (0.002 in) or less. Insufficient end float will cause bearing failure Excessive end float can cause gear teeth wear and dog clutch disengagement when under load

1. Using a mild steel drift, drive out both bearing cups from the PTO case and remove all the shims from between the bearing cups and the PTO case Refit the cups, making sure that they are fully seated and wiped clean
2. Remove all traces of oil from the roller bearing cones, the needle thrust bearing, and the bearing cups in the end cover.
3 Assemble PTO: operation 1 to 13.
4 Fit the reversible shaft with six spline end outwards and tighten the retaining screws.
5. Position PTO unit with shafts vertical and the end cover downwards. Use wood blocks to support PTO unit so that the reversible shaft is clear and can be reached by hand
6. Rotate and rock the shaft to ensure that the bearings are seated and attach a dial gauge so that the measuring probe is parallel to the shaft and in contact with the bearing retainer.
7 Push up on the reversible shaft and then down on the bearing retainer and note the measurement
8. Re-position the dial gauge so that the measuring probe contacts the input shaft, lift shaft up and then push down and note the measurement.
   Example.
   Measurement is 0.05 mm (0.002 in).
   End-float required is 0.076 mm (0 003 in).
   Shims required are 0.43 mm (0.017 in)
   Always avoid using a large number of thin shims.
9. Disassemble, fit shims of the required thickness between the bearing cups and the PTO case and assemble PTO unit

Control lever and selector.

Disassembly

1 Place PTO casing on bench standing on the end cover.
2. Select disengage position, operating lever upwards, and slide the dog clutch gear out of the selector fork
3. Remove circlip, place a finger over the hole in the side of the selector fork to prevent the detent ball and spring from becoming displaced, and withdraw selector fork from the selector rod
4. Drive the pin out of the boss and withdraw the boss from the selector lever shaft
5 Slide out the selector shaft and lever from inside the PTO casing.
6. Remove the two setscrews which fasten the retaining plate to the PTO casing, and remove the retaining plate.
7. Drive out the selector rod using a mild steel drift.

NOTE: Operation 6 and 7 can only be carried out after the end cover and gears have been removed

Inspection

Check for wear, particularly detent ball grooves in selector rod and faces of selector fork.

Assembly:

1. Fit new 'O' ring to selector lever shaft and coat the shaft with grease.
2. Reverse operations 2 to 7.

NOTE: Plug the holes in the PTO case with lint-free cloth or paper before fitting the detent ball and spring to prevent the detent ball falling into the PTO case if it becomes displaced whilst being fitted

Fig. J15

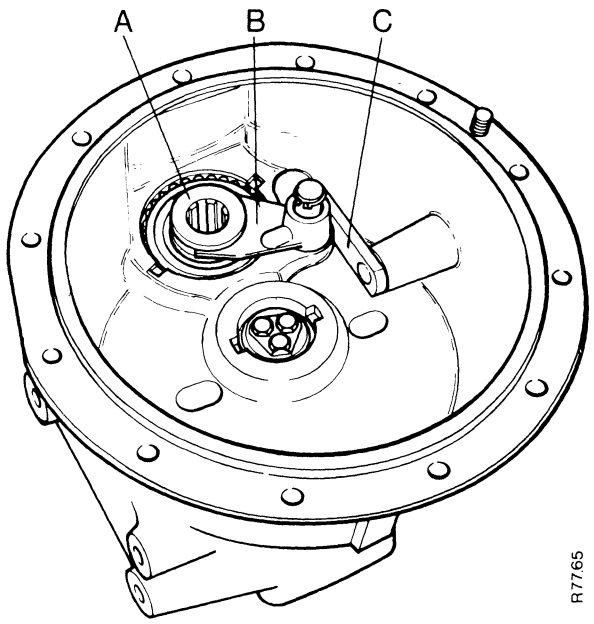

R77.65

A. Dog clutch gear
B. Selector fork
C. Selector lever

Fig. J16

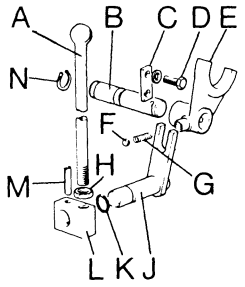

R77.57

A. Operating lever
B. Selector rod
C. Retaining plate
D. Setscrew
E. Selector fork
F. Steel ball
G. Spring
H. Locknut
J. Selector lever
K. 'O' ring
L. Operating lever boss
M. Pin
N. Circlip

Input shaft end float	(0.05 to 0.10 mm)	0.002–0.004 in
Output shaft end float	(0.05 to 0.10 mm)	0.002–0.004 in
Output shaft setscrews	(2.76 kg m)	20 lb ft
End cover setscrews	(2.76 kg m)	20 lb ft
Selector rod retainer plate screw	(1.3 kg m)	9 lb ft

Tools required: manufacture locally from M.S plate.

Fig. J17

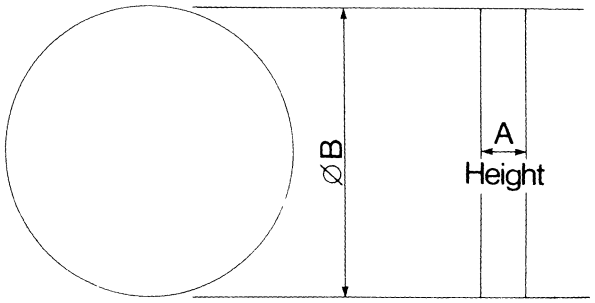

Tool	A.	B.
Oil Seal Replacer	12.7 mm (0.5 in)	70 mm (2.75 in)
Support Pad	35 mm (1.375 in)	89 mm (3.5 in)
Support Pad/Oil Seal Replacer	17.5 mm (0.688 in)	133 mm (5.25 in)

Printed in U.S.A.

CASE CORPORATION
700 STATE STREET
RACINE, WI 53404 U.S.A.

CASE CANADA CORPORATION
3350 SOUTH SERVICE ROAD
BURLINGTON, ON L7N 3M6 CANADA